SPECIALTY FASTENERS
MASTER CATALOG

Jergens®

MANUFACTURING EFFICIENCY

WWW.JERGENSINC.COM

WORKHOLDING SOLUTIONS | SPECIALTY FASTENERS | LIFTING SOLUTIONS

Jergens®
www.jergensinc.com

SPECIALTY FASTENERS

Fasten, Strengthen and Secure:

From threaded inserts and Spinner-Grip™ Flange Nuts & Bolts to Kwik-Lok® Pins.

KWIK-LOK® PINS 5–34

Kwik-Lok® Pins provide quick, easy positive engagement and high holding strength for applications requiring frequent, repetitive use. Available in a variety of diameters and lengths, their simple, smooth operation makes Kwik-Lok® Pins an ideal replacement for detent pins, clevis pins and cotter pins.

SPRING LOADED DEVICES 35–52

Our unique Solid Drive Design allows the entire plunger to move, eliminating the need for set screws that often result in hard-to-remove plunger bodies and lost springs.

THREADED INSERTS 53–68

Rated among the highest in pullout strength, Jergens' keylocking inserts can easily be installed with standard drills and taps. Competitive products require special drills, taps and installation tools. MS/NAS products available.

MISCELLANEOUS FASTENERS 69–80

From pull dowels, clevis pins, and leveling mounts to rod ends, washers, and yokes, Jergens has the fasteners you need. Exclusive to Jergens, our Spinner-Grip™ Self-Locking Fastener System has an all-metal construction that is easily installed and completely re-usable.

HANDWHEELS, KNOBS & HANDLES 81–142

Jergens Specialty Fasteners maintains a large inventory of several varieties of knobs, handles, hand wheels, and cranks. Whether you're looking for prototype or production quantities, we can help!

TOGGLE CLAMPS 143–186

Jergens' toggle clamps are a top quality alternative to more expensive brands. We maintain a large inventory and are happy to help identify the right product for your application.

Jergens is a world leader in innovative fastening technology for a wide range of applications. Our user-friendly products are designed with unique, problem-solving features that increase efficiency and effectiveness. With thousands of standard products available, and the ability to modify standards and manufacture custom specials, Jergens can meet your requirements while bringing simple solutions to complex applications.

Jergens Company Profile

Jergens Inc. was founded in 1942 by Jack Schron, Sr. and his father Christy, to provide standard components for building jigs and fixtures. Today the fourth generation of family involvement continues stronger than ever. Throughout it's sixty-year history the company has grown into four separate operating divisions: Tooling Component Division (TCD), Jergens Industrial Supply (JIS), Acme Industrial Company (AIC), and Advanced Systems Group (ASG) Division of Jergens. While all divisions are vital to the Jergens family, the TCD Division is the centerpiece of our manufacturing capabilities. In June 1999, Jergens moved into a new 110,000 square foot facility and prides itself by manufacturing over 80% of it's product offering, as well as setting the standard for producing the highest quality components in our industry.

Jergens Tooling Component Division now comprises 3 distinct business units: Workholding Solutions, Lifting Solutions and Specialty Fasteners. Building on its reputation of uncompromising quality standards, Jergens is committed to helping its customers achieve leaner, more profitable manufacturing, and continues to add products and engineered solutions for an integrated approach to "Manufacturing Efficiency."

Today, you'll find our tooling components, fasteners and hoist rings at work in just about every industry on every continent. And our innovative Quick Change Workholding Solutions like Ball Lock® Mounting System have changed the way manufacturers worldwide think about productivity.

Jergens actively supports global, multinational and internationally based customers with metric dimensioned product offerings as well as many inch threaded products that are common in aerospace and industrial applications around the world. In important manufacturing markets in Canada, Europe, Asia and Latin America, Jergens representatives and stocking distributors have represented Jergens for more than 30 years. Our international representatives are trained technically on our products and provide expertise to customers and sub dealers in applying Jergens technologies to local industries. In recent years, two wholly owned affiliates were formed to serve the Chinese and Indian markets. Jergens (Shanghai) Commercial Co., Ltd, opened in 2006 and Jergens India Private Ltd., Navi Mumbai India opened in 2009. These fully registered trading subsidiaries employ trained multi-lingual engineers and commercial managers who provide marketing and importing, warehousing, distribution and technical support to our customers, distributors and local representatives.

Additionally, we offer a wide range of metalworking tools, clamps, and supplies to manufacturers in Northeastern Ohio, through our JIS Division. Acme Industrial, located in Carpentersville, Illinois, is a premium manufacturer of precision drill bushings and keylocking thread inserts. Our ASG Division specializes in products for light assembly ranging from torque-controlled electric screwdrivers to automation systems.

In addition to our unique product designs, we lead the industry with unparalleled customer service and delivery. Our website is a good example of our commitment to be the most innovative company in our industry. Customers and distributors can check stock and order on-line, view the Jergens catalog, and even download 2D, 3D and solid model CAD drawings in a variety of formats. Visit our website at www.jergensinc.com for the latest news and product information, as well as links to our other divisions. The Jergens family thanks you for your business.

Distribution of Jergens Products

Jergens is proud to be represented by a network of qualified distributors throughout the world. If you do not know the name of the distributor nearest you, please call Jergens Customer Service at 1-866-KWIK-LOK or visit www.jergensinc.com.

Quality Policy

Jergens, Inc. manufactures and supplies only *quality* products. Our quality system is ISO 9001: 2008 Certified. Center-Pull and Side-Pull Hoist Rings are CE Certified. If there is a problem with any of our products, please contact your local Jergens Distributor or contact our Customer Service Department.

Design Aids

Jergens, Inc. offers several CAD drawing formats for use in fixture design. Our Fixture Pro® software is available on CD. Our internet site (www.jergensinc.com) offers our complete catalog with hot links to CAD drawings on most of our products. We also offer 3D solid models of our products via the internet.

Application Assistance

Jergens Inc. maintains a complete Technical Sales Department to work with you. Please feel free to call upon their knowledge and experience. Application videos are available for the Ball Lock® Mounting System, 5-Axis Fixture Pro®, Spinner-Grip™ Flange Nuts, and Hydraulic Vise Column products at www.jergensinc.com or www.youtube.com/users/jergensinc.

Engineering Changes

Product improvement is a continuing process at Jergens, Inc. Specifications and engineering data are subject to change without notice. **If current information is critical to your design, it is suggested that you contact the Jergens Customer Service Department, or download the most current drawing from our website*, to verify any dimensions or specifications**.

Bar Coding

Jergens' boxed and bagged products are fully bar coded for automatic identification. The bar code labels contain the ASCII Code 39 format, which was chosen as being suitable for most bar code readers. Jergens' bar codes will identify part numbers and manufacturer's codes.

Specials

Jergens, Inc. will modify any item that is similar to our standard component parts. Please contact your Jergens Distributor with your request for a quote. Prints or sketches should be furnished if possible.

TCMA Standards

Products throughout this catalog meet the standards of the Tooling Component Manufacturers' Association. The items are asterisked and are interchangeable with other tooling component manufacturer's products.

Material and Finish Specifications

Stressproof®: A severely cold worked, furnace treated steel bar. Produced by LaSalle patented process to obtain high strength, free machinability, good wear, and minimum warpage in the bar.

Alloy Steel - 4140 or equivalent

Low Carbon Steel - Free Machining 1215, 1018, or equivalent

52100: QQS-624

Zinc Plate: ASTM B633, Type III, Class FE/ZN 5

Cadmium Plate: AMS-QQ-P-416, Class 3, Type 1

Black Oxide: MIL-DTL-13924 and AMS-2485

Black Anodize: per Mil. Spec. MIL-A-8625, Type II, Class 2 and AMS-2472

Passivate: AMS 2700

Alternate Finishes available upon request.

*** 3D Solid Models are available in multiple formats from www.jergensinc.com**

Jergens, Inc.
Manufacturing Number: 697830
FSCM #94882

ISO 9001: 2008
Registration #00010133

Kwik-Lok® Pins

Selection and Ordering 6

T-Handle Pins
- Aluminum Handle 8–9
- Stainless Handle 16–17

L-Handle Pins
- Aluminum Handle 10–11
- Stainless Handle 16–17

Button Handle Pins
- Aluminum Handle 12–13
- Stainless Handle 18–19
- Recessed Stainless 7

Ring Handle Pins
- Stainless Steel 14–15

Kwik-Lok® Lifting Pins
- Stainless Steel 30–31

Double Acting Pin
- T, L & Ring 20–21

Detent Pins 22–23
Lanyards 24–25
Standard Duty Detent Pins 26–27
Application Information 32
Special Pin Quotation 33
Specifications and Materials 28–29

Jergens®
MANUFACTURING EFFICIENCY

Kwik-Lok® Pins – Selection and Ordering

1. Choose Handle Shape and Style:

	Material
T, L, or Button	Aluminum
Heavy Duty T, L, or Button	Stainless Steel
Ring Handle, Lifting Ring, or Recessed Button	Stainless Steel
Double Acting (Push/Pull) T or L	Stainless Steel

2. Select Pin Body Material

- •17-4-PH heat treated Stainless Steel for highest strength, corrosion and scratch resistance
- •Alloy Steel heat treated and cadmium plating to military specifications

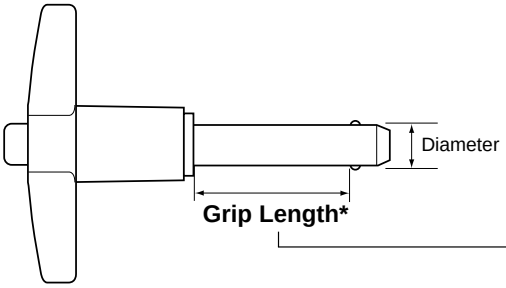

*Grip Length is measured to edge of locking ball
Standard Grip Lengths: 1/2"– 6", 10–100 mm
Special Grip Lengths available on request

3. Specify Pin Diameter and Grip Length

Standard Kwik-Lok® Pin Diameters				Double Shear Resistance (Minimum)			
				Stainless Steel (17-4 PH)		Alloy Steel (Cadmium Plated)	
Nominal		Min/Max (Inches)	Min/Max (mm)	lbs	kN	lbs	kN
3/16"		0.1870 / 0.1885	4.75 / 4.79	5150	23	4600	20
—	5 mm	0.1937 / 0.1953	4.92 / 4.96	5395	24	4721	21
—	6 mm	0.2331 / 0.2346	5.92 / 5.96	7868	35	6969	31
1/4"		0.2470 / 0.2485	6.27 / 6.31	9200	41	8200	36
5/16"		0.3095 / 0.3110	7.86 / 7.90	14400	64	12800	57
—	8 mm	0.3118 / 0.3134	7.92 / 7.96	14695	65	13062	58
3/8"		0.3720 / 0.3735	9.45 / 9.49	20700	92	18400	82
—	10 mm	0.3906 / 0.3921	9.92 / 9.96	22480	100	19782	88
7/16"		0.4345 / 0.4360	11.04 / 11.07	28500	127	25000	111
—	12 mm	0.4693 / 0.4709	11.92 / 11.96	32371	144	28774	128
1/2"		0.4970 / 0.4985	12.62 / 12.66	36900	164	32800	146
9/16"		0.5595 / 0.5610	14.21 / 14.25	46700	208	41600	185
5/8"		0.6220 / 0.6235	15.80 / 15.84	57800	257	51400	229
—	16 mm	0.6268 / 0.6283	15.92 / 15.96	57774	257	51479	229
3/4"		0.7470 / 0.7485	18.97 / 19.01	83200	370	74600	332
—	20 mm	0.7843 / 0.7858	19.92 / 19.96	90594	403	57998	258
7/8"		0.8720 / 0.8735	22.15 / 22.19	112500	500	100000	445
—	25 mm	0.9811 / 0.9827	24.92 / 24.96	141849	631	126113	561
1"		0.9970 / 0.9985	25.32 / 25.36	147200	655	131000	583

See Page 28 for recommended mounting hole diameters and minimum locking ball tensile strength for estimating pullout resistance.

4. Locate Standard Part Numbers from Charts by Diameter and Grip Length.

5. Select Lanyards and Tabs on pages 24–25:

Specify Length of Cable (Stainless Steel) with Green Nylon Jacket (other colors available)
Choose Tab Style, Material and Mounting Hole Dimension
Specify if Lanyard is to be crimped to Pin without Split Ring

Recessed Button Handle Kwik-Lok® Pin

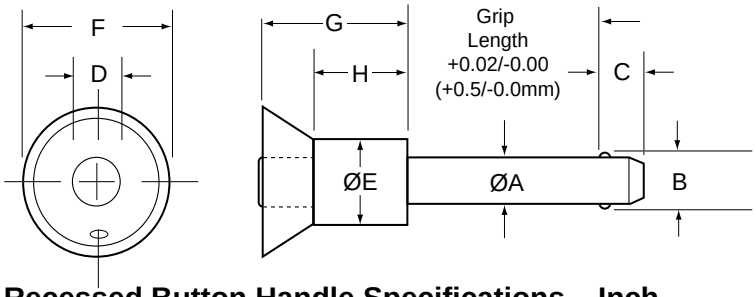

- The Recessed Button Handle Kwik-Lok® Pin design helps prevent accidental actuation of the pin.
- Handle is stainless steel and the button is stainless steel.
- Body is made from high Strength Stainless Steel, 17-4 PH heat treated.
- Includes hole for easy attachment of optional lanyard or ring.

Recessed Button Handle Specifications – Inch

Nom Pin Dia	ØA Min	ØA Max	±0.005 B	+0.00/ -0.04 C	Button Dia. D	E	F	G	H
3/16 (#10)	.1870	.1885	.220	.260	1/4	15/32	13/16	1"	23/32
1/4	.2470	.2485	.289	.290	1/4	15/32	13/16	1"	23/32
5/16	.3095	.3110	.375	.330	1/4	15/32	13/16	1"	23/32
3/8	.3720	.3735	.440	.365	5/16	1/2	1 3/32	1 5/16	7/8
7/16	.4345	.4360	.509	.380	5/16	1/2	1 3/32	1 5/16	7/8
1/2	.4970	.4985	.594	.460	7/16	5/8	1 1/16	1 3/16	13/16

Recessed Button Handle Specifications – Metric

Nom Pin Dia	ØA Min	ØA Max	±0.13 B	+0.01/ -1.0 C	Button Dia. D	E	F	G	H
5	4.92	4.96	5.54	6	6.5	11.6	20	25	18
6	5.92	5.96	6.99	7	6.5	11.6	20	25	18
8	7.92	7.96	9.42	8	6.5	11.6	20	25	18
10	9.92	9.96	11.86	9	8.1	12.7	28	33	22
12	11.92	11.96	14.45	10	10.1	15.9	28	33	22

	Pin Dia	Grip Length (Inches) 0.5	0.75	1	1.25	1.5	1.75	2	2.5	3*	4*	5*	6
PART NUMBERS	3/16	803000	803001	803002	803003	803004	803005	803006	803008	803009	803011	803013	803015
	1/4	803016	803017	803018	803019	803020	803021	803022	803024	803025	803027	803029	803031
	5/16	803032	803033	803034	803035	803036	803037	803038	803040	803041	803043	803045	803047
	3/8	803048	803049	803050	803051	803052	803053	803054	803056	803057	803059	803061	803063
	7/16	803064	803065	803066	803067	803068	803069	803070	803072	803073	803075	803077	803079
	1/2	803080	803081	803082	803083	803084	803085	803086	803088	803089	803091	803093	803095

Contact customer service for other sizes.

	Pin Dia	Grip Length (Metric) 10	15	20	25	30	40	50	60	70	80	90	100
PART NUMBERS	5	853000	853001	853002	853003	853004	853005	853006	853007	853008	853009	853010	853011
	6	853012	853013	853014	853015	853016	853017	853018	853019	853020	853021	853022	853023
	8	853024	853025	853026	853027	853028	853029	853030	853031	853032	853033	853034	853035
	10	853036	853037	853038	853039	853040	853041	853042	853043	853044	853045	853046	853047
	12	853048	853049	853050	853051	853052	853053	853054	853055	853056	853057	853058	853059

Contact customer service for other sizes.

T-Handle Kwik-Lok® Pin
MS17985, NAS1333-NAS1343
A2=Aluminum T Handle

- The T-Handle Kwik-Lok® Pin provides a firm, even grip for smooth comfortable operation.
- Handle is black cast aluminum and the button is blue anodized aluminum.
- Pin body available in:
  Heat Treated 17-4 PH Stainless Steel
  or Heat Treated Alloy Steel, Cadmium plated.
- Includes hole and split ring for easy attachment of optional lanyard.

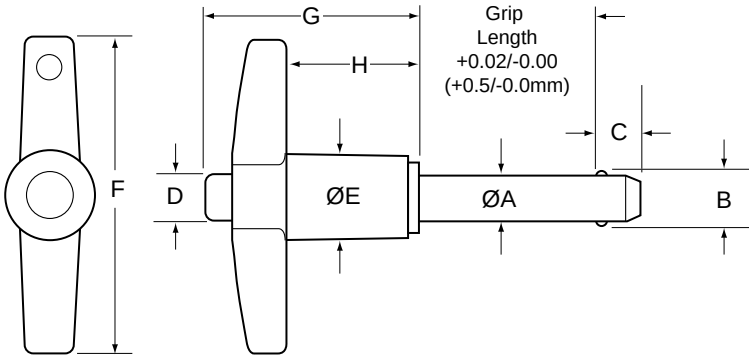

T-Handle Specifications – Inch

Nom Pin Dia	ØA Min	ØA Max	±0.005 B	+0.00/ -0.04 C	D	E	F	G	H
3/16 (#10)	.1870	.1885	.220	.260	1/4	1/2	1 13/16	1 1/4	3/4
1/4	.2470	.2485	.289	.290	1/4	1/2	1 13/16	1 1/4	3/4
5/16	.3095	.3110	.375	.330	1/4	1/2	1 13/16	1 1/4	3/4
3/8	.3720	.3735	.440	.365	5/16	19/32	2	1 7/16	15/16
7/16	.4345	.4360	.509	.380	5/16	19/32	2	1 7/16	15/16
1/2	.4970	.4985	.594	.460	15/32	3/4	2	1 5/8	1
9/16	.5595	.5610	.666	.510	15/32	3/4	2 3/8	1 5/8	1
5/8	.6220	.6235	.750	.580	9/16	15/16	3 1/8	1 31/32	1 3/16
3/4	.7470	.7485	.887	.670	5/8	15/16	3 1/8	1 31/32	1 3/16
7/8	.8720	.8735	1.046	.760	3/4	1 1/4	3 1/2	2 1/4	1 11/32
1	.9970	.9985	1.209	.890	3/4	1 1/4	3 1/2	2 1/4	1 11/32

T-Handle Specifications – Metric

Nom Pin Dia	ØA Min	ØA Max	±0.13 B	+0.0/ -1.0 C	D	E	F	G	H
5	4.92	4.96	5.54	6	6.5	13.1	46.1	31.3	19.7
6	5.92	5.96	6.99	7	6.5	13.1	46.1	31.3	19.7
8	7.92	7.96	9.42	8	6.5	13.1	46.1	31.3	19.7
10	9.92	9.96	11.86	9	7.7	15.0	51.1	36.1	24.0
12	11.92	11.96	14.45	10	11.1	19.1	59.7	41.9	25.8
16	15.92	15.96	19.00	14	14.5	23.9	78.7	43.0	27.0
20	19.92	19.96	24.08	17	26.2	23.9	78.7	43.0	27.0
25	24.92	24.96	30.94	22	26.2	32.0	88.9	55.9	33.9

Dimensions in millimeters

T-Handle – Inch

PART NUMBERS	Pin Dia	Grip Length (inches) 0.5	0.75	1	1.25	1.5	1.75	2	2.5	3	4	5	6
	Stainless Steel – High Strength Stainless Steel, 17-4 PH heat treated												
	3/16	**801000**	**801001**	**801002**	**801003**	**801004**	**801005**	**801006**	**801008**	**801009**	**801011**	**801013**	**801015**
	1/4	**801016**	**801017**	**801018**	**801019**	**801020**	**801021**	**801022**	**801024**	**801025**	**801027**	**801029**	**801031**
	5/16	**801032**	**801033**	**801034**	**801035**	**801036**	**801037**	**801038**	**801040**	**801041**	**801043**	**801045**	**801047**
	3/8	**801048**	**801049**	**801050**	**801051**	**801052**	**801053**	**801054**	**801056**	**801057**	**801059**	**801061**	**801063**
	7/16	**801064**	**801065**	**801066**	**801067**	**801068**	**801069**	**801070**	**801072**	**801073**	**801075**	**801077**	**801079**
	1/2	**801080**	**801081**	**801082**	**801083**	**801084**	**801085**	**801086**	**801088**	**801089**	**801091**	**801093**	**801095**
	9/16	**801096**	**801097**	**801098**	**801099**	**801100**	**801101**	**801102**	**801104**	**801105**	**801107**	**801109**	**801111**
	5/8	**801112**	**801113**	**801114**	**801115**	**801116**	**801117**	**801118**	**801120**	**801121**	**801123**	**801125**	**801127**
	3/4	**801128**	**801129**	**801130**	**801131**	**801132**	**801133**	**801134**	**801136**	**801137**	**801139**	**801141**	**801143**
	7/8	**801144**	**801145**	**801146**	**801147**	**801148**	**801149**	**801150**	**801152**	**801153**	**801155**	**801157**	**801159**
	1	**801160**	**801161**	**801162**	**801163**	**801164**	**801165**	**801166**	**801168**	**801169**	**801171**	**801173**	**801175**
	Alloy Steel – High Strength Alloy Steel, 4130 heat treated and cadmium plated, yellow trivalent chromium passivation												
	3/16	800800	800801	800802	800803	800804	800805	800806	800808	800809	—	—	—
	1/4	800816	800817	800818	800819	800820	800821	800822	800824	800825	800827	800829	800831
	5/16	800832	800833	800834	800835	800836	800837	800838	800840	800841	800843	800845	800847
	3/8	800848	800849	800850	800851	800852	800853	800854	800856	800857	800859	800861	800863
	7/16	800864	800865	800866	800867	800868	800869	800870	800872	800873	800875	800877	800879
	1/2	800880	800881	800882	800883	800884	800885	800886	800888	800889	800891	800893	800895
	9/16	800896	800897	800898	800899	800900	800901	800902	800904	800905	800907	800909	800911
	5/8	800912	800913	800914	800915	800916	800917	800918	800920	800921	800923	800925	800927
	3/4	800928	800929	800930	800931	800932	800933	800934	800936	800937	800939	800941	800943
	7/8	800944	800945	800946	800947	800948	800949	800950	800952	800953	800955	800957	800959
	1	800960	800961	800962	800963	800964	800965	800966	800968	800969	800971	800973	800975

Contact customer service for other sizes. Includes attachment ring.

T-Handle – Metric

PART NUMBERS	Pin Dia	Grip Length (mm) 10	15	20	25	30	40	50	60	70	80	90	100
	Stainless Steel – High Strength Stainless Steel, 17-4 PH heat treated												
	5	**851000**	**851001**	**851002**	**851003**	**851004**	**851005**	**851006**	**851007**	**851008**	**851009**	**851010**	**851011**
	6	**851012**	**851013**	**851014**	**851015**	**851016**	**851017**	**851018**	**851019**	**851020**	**851021**	**851022**	**851023**
	8	**851024**	**851025**	**851026**	**851027**	**851028**	**851029**	**851030**	**851031**	**851032**	**851033**	**851034**	**851035**
	10	**851036**	**851037**	**851038**	**851039**	**851040**	**851041**	**851042**	**851043**	**851044**	**851045**	**851046**	**851047**
	12	**851048**	**851049**	**851050**	**851051**	**851052**	**851053**	**851054**	**851055**	**851056**	**851057**	**851058**	**851059**
	16	**851060**	**851061**	**851062**	**851063**	**851064**	**851065**	**851066**	**851067**	**851068**	**851069**	**851070**	**851071**
	20	**851072**	**851073**	**851074**	**851075**	**851076**	**851077**	**851078**	**851079**	**851080**	**851081**	**851082**	**851083**
	25	**851084**	**851085**	**851086**	**851087**	**851088**	**851089**	**851090**	**851091**	**851092**	**851093**	**851094**	**851095**
	Alloy Steel – High Strength Alloy Steel, 4130 heat treated and cadmium plated, yellow trivalent chromium passivation												
	5	850800	850801	850802	850803	850804	850805	850806	850807	850808	850809	850810	850811
	6	850812	850813	850814	850815	850816	850817	850818	850819	850820	850821	850822	850823
	8	850824	850825	850826	850827	850828	850829	850830	850831	850832	850833	850834	850835
	10	850836	850837	850838	850839	850840	850841	850842	850843	850844	850845	850846	850847
	12	850848	850849	850850	850851	850852	850853	850854	850855	850856	850857	850858	850859
	16	850860	850861	850862	850863	850864	850865	850866	850867	850868	850869	850870	850871
	20	850872	850873	850874	850875	850876	850877	850878	850879	850880	850881	850882	850883
	25	850884	850885	850886	850887	850888	850889	850890	850891	850892	850893	850894	850895

Contact customer service for other metric sizes. Includes attachment ring.

L-Handle Kwik-Lok® Pin
MS17986, NAS1333-NAS1343
A5=Aluminum L Handle

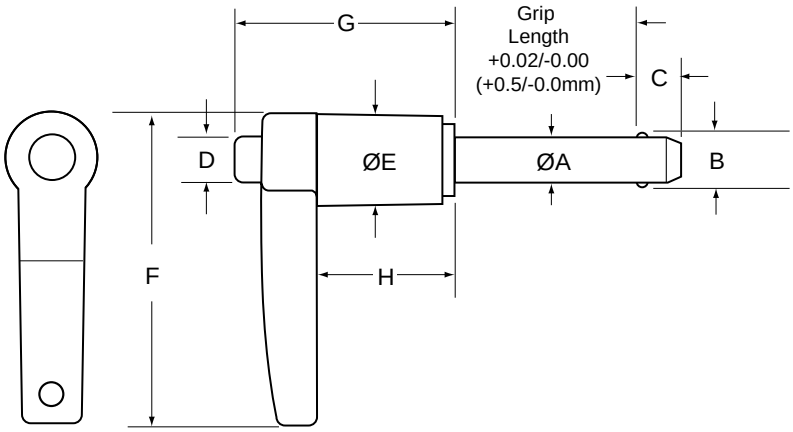

- The L-Handle Kwik-Lok® Pin provides a firm grip for applications where a T-Handle will not fit.
- Handle is black cast aluminum and the button is blue anodized aluminum.
- Pin body available in: Heat Treated 17-4 PH Stainless Steel or Heat Treated Alloy Steel, Cadmium plated.
- Includes hole and split ring for easy attachment of optional lanyard.

L-Handle Specifications – Inch

Nom Pin Dia	ØA Min	ØA Max	±0.005 B	+0.00/ -0.04 C	D	E	F	G	H
3/16 (#10)	.1870	.1885	.220	.260	1/4	1/2	1 3/4	1 1/4	3/4
1/4	.2470	.2485	.289	.290	1/4	1/2	1 3/4	1 1/4	3/4
5/16	.3095	.3110	.375	.330	1/4	1/2	1 3/4	1 1/4	3/4
3/8	.3720	.3735	.440	.365	5/16	19/32	2	1 7/16	15/16
7/16	.4345	.4360	.509	.380	5/16	19/32	2	1 7/16	15/16
1/2	.4970	.4985	.594	.460	15/32	3/4	2 1/4	1 5/8	1
9/16	.5595	.5610	.666	.510	15/32	3/4	2 1/4	1 5/8	1
5/8	.6220	.6235	.750	.580	9/16	15/16	2 1/2	1 31/32	1 3/16
3/4	.7470	.7485	.887	.670	5/8	15/16	2 1/2	1 31/32	1 3/16
7/8	.8720	.8735	1.046	.760	3/4	1 1/4	3 1/4	2 1/4	1 11/32
1	.9970	.9985	1.209	.890	3/4	1 1/4	3 1/4	2 1/4	1 11/32

L-Handle Specifications – Metric

Nom Pin Dia	ØA Min	ØA Max	±0.13 B	+0.0/ -1.0 C	D	E	F	G	H
5	4.92	4.96	5.54	6	6.5	13.1	44.9	31.3	19.7
6	5.92	5.96	6.99	7	6.5	13.1	44.9	31.3	19.7
8	7.92	7.96	9.42	8	6.5	13.1	44.9	31.3	19.7
10	9.92	9.96	11.86	9	7.7	15.1	50.8	36.1	24.0
12	11.92	11.96	14.45	10	11.1	19.1	57.2	41.9	25.8
16	15.92	15.96	19.00	14	14.5	23.9	63.0	43.0	27.0
20	19.92	19.96	24.08	17	26.2	23.9	63.0	43.0	27.0
25	24.92	24.96	30.94	22	26.2	32.4	82.6	55.9	33.9

Dimensions in millimeters

L-Handle – Inch

PART NUMBERS	Pin Dia	Grip Length (inches) 0.5	0.75	1	1.25	1.5	1.75	2	2.5	3	4	5	6
	Stainless Steel – High Strength Stainless Steel, 17-4 PH heat treated												
	3/16	**801400**	**801401**	**801402**	**801403**	**801404**	**801405**	**801406**	**801408**	**801409**	**801411**	**801413**	**801415**
	1/4	**801416**	**801417**	**801418**	**801419**	**801420**	**801421**	**801422**	**801424**	**801425**	**801427**	**801429**	**801431**
	5/16	**801432**	**801433**	**801434**	**801435**	**801436**	**801437**	**801438**	**801440**	**801441**	**801443**	**801445**	**801447**
	3/8	**801448**	**801449**	**801450**	**801451**	**801452**	**801453**	**801454**	**801456**	**801457**	**801459**	**801461**	**801463**
	7/16	**801464**	**801465**	**801466**	**801467**	**801468**	**801469**	**801470**	**801472**	**801473**	**801475**	**801477**	**801479**
	1/2	**801480**	**801481**	**801482**	**801483**	**801484**	**801485**	**801486**	**801488**	**801489**	**801491**	**801493**	**801495**
	9/16	**801496**	**801497**	**801498**	**801499**	**801500**	**801501**	**801502**	**801504**	**801505**	**801507**	**801509**	**801511**
	5/8	**801512**	**801513**	**801514**	**801515**	**801516**	**801517**	**801518**	**801520**	**801521**	**801523**	**801525**	**801527**
	3/4	**801528**	**801529**	**801530**	**801531**	**801532**	**801533**	**801534**	**801536**	**801537**	**801539**	**801541**	**801543**
	7/8	**801544**	**801545**	**801546**	**801547**	**801548**	**801549**	**801550**	**801552**	**801553**	**801555**	**801557**	**801559**
	1	**801560**	**801561**	**801562**	**801563**	**801564**	**801565**	**801566**	**801568**	**801569**	**801571**	**801573**	**801575**
	Alloy Steel – High Strength Alloy Steel, 4130 heat treated and cadmium plated, yellow trivalent chromium passivation												
	3/16	801200	801201	801202	801203	801204	801205	801206	801208	801209	—	—	—
	1/4	801216	801217	801218	801219	801220	801221	801222	801224	801225	801227	801229	801231
	5/16	801232	801233	801234	801235	801236	801237	801238	801240	801241	801243	801245	801247
	3/8	801248	801249	801250	801251	801252	801253	801254	801256	801257	801259	801261	801263
	7/16	801264	801265	801266	801267	801268	801269	801270	801272	801273	801275	801277	801279
	1/2	801280	801281	801282	801283	801284	801285	801286	801288	801289	801291	801293	801295
	9/16	801296	801297	801298	801299	801300	801301	801302	801304	801305	801307	801309	801311
	5/8	801312	801313	801314	801315	801316	801317	801318	801320	801321	801323	801325	801327
	3/4	801328	801329	801330	801331	801332	801333	801334	801336	801337	801339	801341	801343
	7/8	801344	801345	801346	801347	801348	801349	801350	801352	801353	801355	801357	801359
	1	801360	801361	801362	801363	801364	801365	801366	801368	801369	801371	801373	801375

Contact customer service for other sizes. Includes attachment ring.

L-Handle – Metric

PART NUMBERS	Pin Dia	Grip Length (mm) 10	15	20	25	30	40	50	60	70	80	90	100
	Stainless Steel – High Strength Stainless Steel, 17-4 PH heat treated												
	5	**851400**	**851401**	**851402**	**851403**	**851404**	**851405**	**851406**	**851407**	**851408**	**851409**	**851410**	**851411**
	6	**851412**	**851413**	**851414**	**851415**	**851416**	**851417**	**851418**	**851419**	**851420**	**851421**	**851422**	**851423**
	8	**851424**	**851425**	**851426**	**851427**	**851428**	**851429**	**851430**	**851431**	**851432**	**851433**	**851434**	**851435**
	10	**851436**	**851437**	**851438**	**851439**	**851440**	**851441**	**851442**	**851443**	**851444**	**851445**	**851446**	**851447**
	12	**851448**	**851449**	**851450**	**851451**	**851452**	**851453**	**851454**	**851455**	**851456**	**851457**	**851458**	**851459**
	16	**851460**	**851461**	**851462**	**851463**	**851464**	**851465**	**851466**	**851467**	**851468**	**851469**	**851470**	**851471**
	20	**851472**	**851473**	**851474**	**851475**	**851476**	**851477**	**851478**	**851479**	**851480**	**851481**	**851482**	**851483**
	25	**851484**	**851485**	**851486**	**851487**	**851488**	**851489**	**851490**	**851491**	**851492**	**851493**	**851494**	**851495**
	Alloy Steel – High Strength Alloy Steel, 4130 heat treated and cadmium plated, yellow trivalent chromium passivation												
	5	851200	851201	851202	851203	851204	851205	851206	851207	851208	851209	851210	851211
	6	851212	851213	851214	851215	851216	851217	851218	851219	851220	851221	851222	851223
	8	851224	851225	851226	851227	851228	851229	851230	851231	851232	851233	851234	851235
	10	851236	851237	851238	851239	851240	851241	851242	851243	851244	851245	851246	851247
	12	851248	851249	851250	851251	851252	851253	851254	851255	851256	851257	851258	851259
	16	851260	851261	851262	851263	851264	851265	851266	851267	851268	851269	851270	851271
	20	851272	851273	851274	851275	851276	851277	851278	851279	851280	851281	851282	851283
	25	851284	851285	851286	851287	851288	851289	851290	851291	851292	851293	851294	851295

Contact customer service for other metric sizes. Includes attachment ring.

Button Handle Kwik-Lok® Pin
MS17984, NAS 1333-1343
A3=Aluminum Button Handle

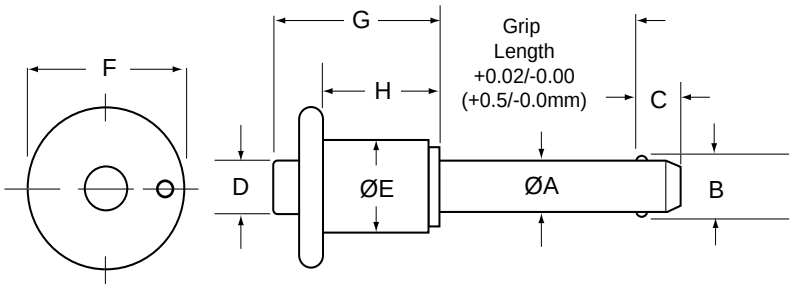

- The Button Handle Kwik-Lok® Pin is ideal for applications that have limited space around the handle.
- Light weight black anodized aluminum handle with blue anodized aluminum button.
- Pin body available in:
  Heat Treated 17-4 PH Stainless Steel
  or Heat Treated Alloy Steel, Cadmium plated.
- Includes hole and split ring for easy attachment of optional lanyard.

Button Handle Specifications – Inch

Nom Pin Dia	ØA Min	ØA Max	±0.005 B	+0.00/ -0.04 C	D	E	F	G	H
3/16 (#10)	.1870	.1885	.220	.260	1/4	7/16	13/16	13/16	5/8
1/4	.2470	.2485	.289	.290	1/4	7/16	13/16	7/8	5/8
5/16	.3095	.3110	.375	.330	1/4	7/16	7/8	29/32	5/8
3/8	.3720	.3735	.440	.365	5/16	9/16	1 1/8	1 1/32	3/4
7/16	.4345	.4360	.509	.380	5/16	9/16	1 1/8	1 3/32	3/4
1/2	.4970	.4985	.594	.460	7/16	23/32	1 3/8	1 3/16	13/16
9/16	.5595	.5610	.666	.510	7/16	23/32	1 3/8	1 3/8	1
5/8	.6220	.6235	.750	.580	37/64	27/32	1 5/8	1 1/2	1 1/16
3/4	.7470	.7485	.887	.670	37/64	15/16	1 7/8	1 21/32	1 5/32
7/8	.8720	.8735	1.046	.760	3/4	1 1/8	2 3/16	1 31/32	1 1/2
1	.9970	.9985	1.219	.890	3/4	1 3/16	2 3/16	2 1/8	1 1/2

Button Handle Specifications – Metric

Nom Pin Dia	ØA Min	ØA Max	±0.13 B	+0.0/ -1.0 C	D	E	F	G	H
5	4.92	4.96	5.54	6	6.4	11.1	20.6	20.6	15.9
6	5.92	5.96	6.99	7	6.4	11.1	20.6	22.2	15.9
8	7.92	7.96	9.42	8	6.4	11.1	22.2	23.0	15.9
10	9.92	9.96	11.86	9	7.9	14.3	28.6	27.8	19.1
12	11.92	11.96	14.45	10	11.1	18.3	34.9	34.9	25.4
16	15.92	15.96	19.00	14	14.7	21.4	41.3	38.1	27.0
20	19.92	19.96	24.08	17	14.7	23.8	47.6	42.1	29.4
25	24.92	24.96	30.94	22	19.1	30.2	55.6	54.0	38.1

Dimensions in millimeters

Button Handle – Inch

Pin Dia	Grip Length (inches) 0.5	0.75	1	1.25	1.5	1.75	2	2.5	3	4	5	6
Stainless Steel – High Strength Stainless Steel, 17-4 PH heat treated												
3/16	**800600**	**800601**	**800602**	**800603**	**800604**	**800605**	**800606**	**800608**	**800609**	**800611**	**800613**	**800615**
1/4	**800616**	**800617**	**800618**	**800619**	**800620**	**800621**	**800622**	**800624**	**800625**	**800627**	**800629**	**800631**
5/16	**800632**	**800633**	**800634**	**800635**	**800636**	**800637**	**800638**	**800640**	**800641**	**800643**	**800645**	**800647**
3/8	**800648**	**800649**	**800650**	**800651**	**800652**	**800653**	**800654**	**800656**	**800657**	**800659**	**800661**	**800663**
7/16	**800664**	**800665**	**800666**	**800667**	**800668**	**800669**	**800670**	**800672**	**800673**	**800675**	**800677**	**800679**
1/2	**800680**	**800681**	**800682**	**800683**	**800684**	**800685**	**800686**	**800688**	**800689**	**800691**	**800693**	**800695**
9/16	**800696**	**800697**	**800698**	**800699**	**800700**	**800701**	**800702**	**800704**	**800705**	**800707**	**800709**	**800711**
5/8	**800712**	**800713**	**800714**	**800715**	**800716**	**800717**	**800718**	**800720**	**800721**	**800723**	**800725**	**800727**
3/4	**800728**	**800729**	**800730**	**800731**	**800732**	**800733**	**800734**	**800736**	**800737**	**800739**	**800741**	**800743**
7/8	**800744**	**800745**	**800746**	**800747**	**800748**	**800749**	**800750**	**800752**	**800753**	**800755**	**800757**	**800759**
1	**800760**	**800761**	**800762**	**800763**	**800764**	**800765**	**800766**	**800768**	**800769**	**800771**	**800773**	**800775**
Alloy Steel – High Strength Alloy Steel, 4130 heat treated and cadmium plated, yellow trivalent chromium passivation												
3/16	800400	800401	800402	800403	800404	800405	800406	800408	800409	—	—	—
1/4	800416	800417	800418	800419	800420	800421	800422	800424	800425	800427	800429	800431
5/16	800432	800433	800434	800435	800436	800437	800438	800440	800441	800443	800445	800447
3/8	800448	800449	800450	800451	800452	800453	800454	800456	800457	800459	800461	800463
7/16	800464	800465	800466	800467	800468	800469	800470	800472	800473	800475	800477	800479
1/2	800480	800481	800482	800483	800484	800485	800486	800488	800489	800491	800493	800495
9/16	800496	800497	800498	800499	800500	800501	800502	800504	800505	800507	800509	800511
5/8	800512	800513	800514	800515	800516	800517	800518	800520	800521	800523	800525	800527
3/4	800528	800529	800530	800531	800532	800533	800534	800536	800537	800539	800541	800543
7/8	800544	800545	800546	800547	800548	800549	800550	800552	800553	800555	800557	800559
1	800560	800561	800562	800563	800564	800565	800566	800568	800569	800571	800573	800575

Contact customer service for other sizes. Includes attachment ring.

Button Handle – Metric

Pin Dia	Grip Length (mm) 10	15	20	25	30	40	50	60	70	80	90	100
Stainless Steel – High Strength Stainless Steel, 17-4 PH heat treated												
5	**850600**	**850601**	**850602**	**850603**	**850604**	**850605**	**850606**	**850607**	**850608**	**850609**	**850610**	**850611**
6	**850612**	**850613**	**850614**	**850615**	**850616**	**850617**	**850618**	**850619**	**850620**	**850621**	**850622**	**850623**
8	**850624**	**850625**	**850626**	**850627**	**850628**	**850629**	**850630**	**850631**	**850632**	**850633**	**850634**	**850635**
10	**850636**	**850637**	**850638**	**850639**	**850640**	**850641**	**850642**	**850643**	**850644**	**850645**	**850646**	**850647**
12	**850648**	**850649**	**850650**	**850651**	**850652**	**850653**	**850654**	**850655**	**850656**	**850657**	**850658**	**850659**
16	**850660**	**850661**	**850662**	**850663**	**850664**	**850665**	**850666**	**850667**	**850668**	**850669**	**850670**	**850671**
20	**850672**	**850673**	**850674**	**850675**	**850676**	**850677**	**850678**	**850679**	**850680**	**850681**	**850682**	**850683**
25	**850684**	**850685**	**850686**	**850687**	**850688**	**850689**	**850690**	**850691**	**850692**	**850693**	**850694**	**850695**
Alloy Steel – High Strength Alloy Steel, 4130 heat treated and cadmium plated, yellow trivalent chromium passivation												
5	850400	850401	850402	850403	850404	850405	850406	850407	850408	850409	850410	850411
6	850412	850413	850414	850415	850416	850417	850418	850419	850420	850421	850422	850423
8	850424	850425	850426	850427	850428	850429	850430	850431	850432	850433	850434	850435
10	850436	850437	850438	850439	850440	850441	850442	850443	850444	850445	850446	850447
12	850448	850449	850450	850451	850452	850453	850454	850455	850456	850457	850458	850459
16	850460	850461	850462	850463	850464	850465	850466	850467	850468	850469	850470	850471
20	850472	850473	850474	850475	850476	850477	850478	850479	850480	850481	850482	850483
25	850484	850485	850486	850487	850488	850489	850490	850491	850492	850493	850494	850495

Contact customer service for other metric sizes. Includes attachment ring.

Ring-Handle Kwik-Lok® Pin
MS17987, NAS1333-NAS1343
C6=Stainless Ring Handle

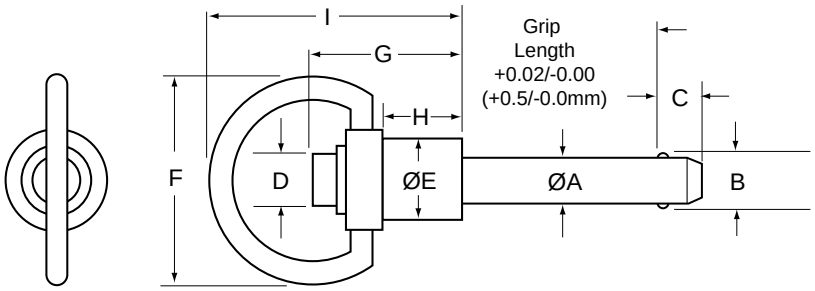

- The Ring-Handle Kwik-Lok® Pin is designed for applications which require small clearance area around the pin.
- Stainless steel handle for tough environment with blue anodized aluminum button (steel shanks), or stainless button (stainless steel shanks).
- Pin body available in:
  Heat Treated 17-4 PH Stainless Steel or Heat Treated Alloy Steel, Cadmium plated.
- Ring allows for easy attachment of optional lanyard.

Ring-Handle Specifications – Inch

Nom Pin Dia	ØA Min	ØA Max	±0.005 B	+0.00/ -0.04 C	D	E	F	G	H	I
3/16 (#10)	.1870	.1885	.220	.260	1/4	7/16	1 1/8	13/16	29/64	1 11/32
1/4	.2470	.2485	.289	.290	1/4	7/16	1 1/8	13/16	29/64	1 11/32
5/16	.3095	.3110	.375	.330	1/4	7/16	1 1/8	27/32	29/64	1 11/32
3/8	.3720	.3735	.440	.365	5/16	9/16	1 1/8	1	19/32	1 1/2
7/16	.4345	.4360	.509	.380	5/16	9/16	1 1/8	1	19/32	1 1/2
1/2	.4970	.4985	.594	.460	7/16	11/16	1 3/8	1 1/4	5/8	1 7/8
9/16	.5595	.5610	.666	.510	7/16	11/16	1 3/8	1 1/4	11/16	1 7/8
5/8	.6220	.6235	.750	.580	1/2	15/16	1 5/8	1 11/16	7/8	2 7/16
3/4	.7470	.7485	.887	.670	9/16	15/16	1 5/8	1 13/16	1 1/16	2 7/16
7/8	.8720	.8735	1.046	.760	3/4	1 3/16	1 3/4	2 3/16	1 13/32	2 29/32
1	.9970	.9985	1.219	.890	3/4	1 3/16	1 3/4	2 1/8	1 13/32	2 29/32

Ring-Handle Specifications – Metric

Nom Pin Dia	ØA Min	ØA Max	±0.13 B	+0.0/ -1.0 C	D	E	F	G	H	I
5	4.92	4.96	5.54	6	6.5	10.8	28.0	21.0	11.5	34.1
6	5.92	5.96	6.99	7	6.5	10.8	28.0	21.0	11.5	34.1
8	7.92	7.96	9.42	8	6.5	10.8	28.0	22.0	11.5	34.1
10	9.92	9.96	11.86	9	7.7	14.2	28.0	25.0	15.1	38.0
12	11.92	11.96	14.45	10	10.1	17.2	35.2	28.6	15.9	46.0
16	15.92	15.96	19.00	14	12.4	23.9	41.9	37.0	22.2	56.0
20	19.92	19.96	24.08	17	14.6	23.9	41.9	46.0	27.0	61.6
25	24.92	24.96	30.94	22	19.2	30.0	45.0	55.6	35.7	72.4

Dimensions in millimeters

Ring-Handle – Inch

Pin Dia	Grip Length (inches) 0.5	0.75	1	1.25	1.5	1.75	2	2.5	3	4	5	6
Stainless Steel – High Strength Stainless Steel, 17-4 PH heat treated												
3/16	**800200**	**800201**	**800202**	**800203**	**800204**	**800205**	**800206**	**800208**	**800209**	**800211**	**800213**	**800215**
1/4	**800216**	**800217**	**800218**	**800219**	**800220**	**800221**	**800222**	**800224**	**800225**	**800227**	**800229**	**800231**
5/16	**800232**	**800233**	**800234**	**800235**	**800236**	**800237**	**800238**	**800240**	**800241**	**800243**	**800245**	**800247**
3/8	**800248**	**800249**	**800250**	**800251**	**800252**	**800253**	**800254**	**800256**	**800257**	**800259**	**800261**	**800263**
7/16	**800264**	**800265**	**800266**	**800267**	**800268**	**800269**	**800270**	**800272**	**800273**	**800275**	**800277**	**800279**
1/2	**800280**	**800281**	**800282**	**800283**	**800284**	**800285**	**800286**	**800288**	**800289**	**800291**	**800293**	**800295**
9/16	**800296**	**800297**	**800298**	**800299**	**800300**	**800301**	**800302**	**800304**	**800305**	**800307**	**800309**	**800311**
5/8	**800312**	**800313**	**800314**	**800315**	**800316**	**800317**	**800318**	**800320**	**800321**	**800323**	**800325**	**800327**
3/4	**800328**	**800329**	**800330**	**800331**	**800332**	**800333**	**800334**	**800336**	**800337**	**800339**	**800341**	**800343**
7/8	**800344**	**800345**	**800346**	**800347**	**800348**	**800349**	**800350**	**800352**	**800353**	**800355**	**800357**	**800359**
1	**800360**	**800361**	**800362**	**800363**	**800364**	**800365**	**800366**	**800368**	**800369**	**800371**	**800373**	**800375**
Alloy Steel – High Strength Alloy Steel, 4130 heat treated and cadmium plated, yellow trivalent chromium passivation												
3/16	800000	800001	800002	800003	800004	800005	800006	800008	800009	—	—	—
1/4	800016	800017	800018	800019	800020	800021	800022	800024	800025	800027	800029	800031
5/16	800032	800033	800034	800035	800036	800037	800038	800040	800041	800043	800045	800047
3/8	800048	800049	800050	800051	800052	800053	800054	800056	800057	800059	800061	800063
7/16	800064	800065	800066	800067	800068	800069	800070	800072	800073	800075	800077	800079
1/2	800080	800081	800082	800083	800084	800085	800086	800088	800089	800091	800093	800095
9/16	800096	800097	800098	800099	800100	800101	800102	800104	800105	800107	800109	800111
5/8	800112	800113	800114	800115	800116	800117	800118	800120	800121	800123	800125	800127
3/4	800128	800129	800130	800131	800132	800133	800134	800136	800137	800139	800141	800143
7/8	800144	800145	800146	800147	800148	800149	800150	800152	800153	800155	800157	800159
1	800160	800161	800162	800163	800164	800165	800166	800168	800169	800171	800173	800175

Contact customer service for other sizes.

Ring-Handle – Metric

Pin Dia	Grip Length (mm) 10	15	20	25	30	40	50	60	70	80	90	100
Stainless Steel – High Strength Stainless Steel, 17-4 PH heat treated												
5	**850200**	**850201**	**850202**	**850203**	**850204**	**850205**	**850206**	**850207**	**850208**	**850209**	**850210**	**850211**
6	**850212**	**850213**	**850214**	**850215**	**850216**	**850217**	**850218**	**850219**	**850220**	**850221**	**850222**	**850223**
8	**850224**	**850225**	**850226**	**850227**	**850228**	**850229**	**850230**	**850231**	**850232**	**850233**	**850234**	**850235**
10	**850236**	**850237**	**850238**	**850239**	**850240**	**850241**	**850242**	**850243**	**850244**	**850245**	**850246**	**850247**
12	**850248**	**850249**	**850250**	**850251**	**850252**	**850253**	**850254**	**850255**	**850256**	**850257**	**850258**	**850259**
16	**850260**	**850261**	**850262**	**850263**	**850264**	**850265**	**850266**	**850267**	**850268**	**850269**	**850270**	**850271**
20	**850272**	**850273**	**850274**	**850275**	**850276**	**850277**	**850278**	**850279**	**850280**	**850281**	**850282**	**850283**
25	**850284**	**850285**	**850286**	**850287**	**850288**	**850289**	**850290**	**850291**	**850292**	**850293**	**850294**	**850295**
Alloy Steel – High Strength Alloy Steel, 4130 heat treated and cadmium plated, yellow trivalent chromium passivation												
5	850000	850001	850002	850003	850004	850005	850006	850007	850008	850009	850010	850011
6	850012	850013	850014	850015	850016	850017	850018	850019	850020	850021	850022	850023
8	850024	850025	850026	850027	850028	850029	850030	850031	850032	850033	850034	850035
10	850036	850037	850038	850039	850040	850041	850042	850043	850044	850045	850046	850047
12	850048	850049	850050	850051	850052	850053	850054	850055	850056	850057	850058	850059
16	850060	850061	850062	850063	850064	850065	850066	850067	850068	850069	850070	850071
20	850072	850073	850074	850075	850076	850077	850078	850079	850080	850081	850082	850083
25	850084	850085	850086	850087	850088	850089	850090	850091	850092	850093	850094	850095

Contact customer service for other metric sizes.

Jergens
SPECIALTY FASTENERS GROUP

Heavy Duty T&L Handle Pins
17985, 17986, NAS1333-NAS1343
C2=Stainless T Handle
C5=Stainless L Handle

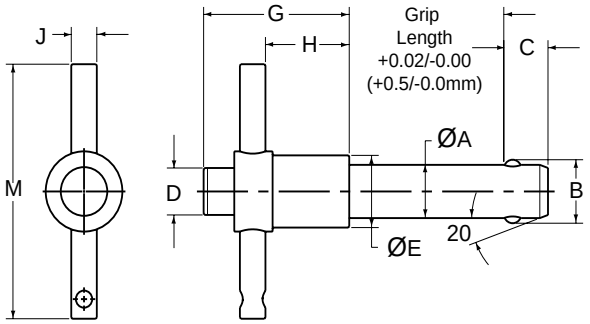

T-Handle Style

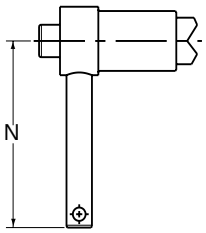

L-Handle Style

- Also known as Ground Handling Pins
- Heavy Duty welded handle provides additional impact resistance
- Includes split ring for easy attachment of optional lanyard.
- All stainless steel handle and button provide additional corrosion resistance
- Body is made from high Strength Stainless Steel, 17-4 PH heat treated.
- Meets or exceeds NASM 23460 specifications
- May be ordered with 4 locking balls for additional locking element tensile strength

Heavy Duty T&L Handle Specifications – Inch

Nom Pin Dia	Pin Dia A Min	Pin Dia A Max	±0.005 B	+0.00/ -0.04 C	D	E	G	H	J	M	N
3/16 (#10)	.1870	.1885	.220	.260	1/4	7/16	1 1/4	13/16	3/16	1 15/16	1 3/4
1/4	.2470	.2485	.289	.290	1/4	7/16	1 1/4	13/16	3/16	1 15/16	1 3/4
5/16	.3095	.3110	.375	.330	1/4	7/16	1 1/4	13/16	3/16	1 15/16	1 3/4
3/8	.3720	.3735	.440	.365	5/16	9/16	1 11/32	13/16	1/4	1 15/16	1 3/4
7/16	.4345	.4360	.509	.380	5/16	9/16	1 11/32	13/16	1/4	2 1/8	1 3/4
1/2	.4970	.4985	.594	.460	7/16	11/16	1 7/16	13/16	1/4	2 3/8	1 31/32
9/16	.5595	.5610	.666	.510	7/16	11/16	1 7/16	13/16	1/4	2 3/8	1 31/32
5/8	.6220	.6235	.750	.580	1/2	15/16	1 11/16	31/32	5/16	2 7/8	2 15/32
3/4	.7470	.7485	.887	.670	37/64	15/16	1 23/32	31/32	5/16	2 7/8	2 15/32
7/8	.8720	.8735	1.046	.760	3/4	1 3/16	2 5/32	1 1/4	3/8	3 1/4	2 13/16
1	.9970	.9985	1.219	.890	3/4	1 3/16	2 5/32	1 1/4	3/8	3 1/4	2 13/16

Heavy Duty T&L Handle Specifications – Metric

Nom Pin Dia	Pin Dia A Min	Pin Dia A Max	± 0.13 B	+0.0/- 1.0 C	D	E	G	H	J	M	N
5	4.92	4.96	5.54	6	6.5	10.8	31.7	20.4	4.76	49.5	44.5
6	5.92	5.96	6.99	7	6.5	10.8	31.7	20.4	4.76	49.5	44.5
8	7.92	7.96	9.40	8	6.5	10.8	31.7	20.4	4.76	49.5	44.5
10	9.92	9.96	11.86	9	7.7	14.2	34.1	21.0	6.35	49.5	44.5
12	11.92	11.96	14.45	10	7.7	14.2	34.2	21.0	6.35	54.1	50.0
16	15.92	15.96	19.00	14	12.4	23.9	42.6	24.6	7.94	73.2	62.7
20	19.92	19.96	24.08	17	12.4	23.9	42.6	24.9	7.94	73.2	62.7
25	24.92	24.96	30.94	22	19.2	30.0	53.4	30.2	9.53	82.3	71.0

Dimensions in millimeters

Heavy Duty T-Handle – Inch

PART NUMBERS	Pin Dia	Grip Length (inches) 0.5	0.75	1	1.25	1.5	1.75	2	2.5	3	4	5	6
	3/16	802600	802601	802602	802603	802604	802605	802606	802608	802609	802611	802613	802615
	1/4	802616	802617	802618	802619	802620	802621	802622	802624	802625	802627	802629	802631
	5/16	802632	802633	802634	802635	802636	802637	802638	802640	802641	802643	802645	802647
	3/8	802648	802649	802650	802651	802652	802653	802654	802656	802657	802659	802661	802663
	7/16	802664	802665	802666	802667	802668	802669	802670	802672	802673	802675	802677	802679
	1/2	802680	802681	802682	802683	802684	802685	802686	802688	802689	802691	802693	802695
	9/16	802696	802697	802698	802699	802700	802701	802702	802704	802705	802707	802709	802711
	5/8	802712	802713	802714	802715	802716	802717	802718	802720	802721	802723	802725	802727
	3/4	802728	802729	802730	802731	802732	802733	802734	802736	802737	802739	802741	802743
	7/8	802744	802745	802746	802747	802748	802749	802750	802752	802753	802755	802757	802759
	1	802760	802761	802762	802763	802764	802765	802766	802768	802769	802771	802773	802775

Heavy Duty L-Handle – Inch

NUMBERS													
	3/16	805600	805601	805602	805603	805604	805605	805606	805608	805609	805611	805613	805615
	1/4	805616	805617	805618	805619	805620	805621	805622	805624	805625	805627	805629	805631
	5/16	805632	805633	805634	805635	805636	805637	805638	805640	805641	805643	805645	805647
	3/8	805648	805649	805650	805651	805652	805653	805654	805656	805657	805659	805661	805663
	7/16	805664	805665	805666	805667	805668	805669	805670	805672	805673	805675	805677	805679
	1/2	805680	805681	805682	805683	805684	805685	805686	805688	805689	805691	805693	805695
	9/16	805696	805697	805698	805699	805700	805701	805702	805704	805705	805707	805709	805711
	5/8	805712	805713	805714	805715	805716	805717	805718	805720	805721	805723	805725	805727
	3/4	805728	805729	805730	805731	805732	805733	805734	805736	805737	805739	805741	805743
	7/8	805744	805745	805746	805747	805748	805749	805750	805752	805753	805755	805757	805759
	1	805760	805761	805762	805763	805764	805765	805766	805768	805769	805771	805773	805775

Contact customer service for other sizes. Includes attachment ring.

Heavy Duty T-Handle – Metric

PART NUMBERS	Pin Dia	Grip Length (mm) 10	15	20	25	30	40	50	60	70	80	90	100
	5	852600	852601	852602	852603	852604	852605	852606	852607	852608	852609	852610	852611
	6	852612	852613	852614	852615	852616	852617	852618	852619	852620	852621	852622	852623
	8	852624	852625	852626	852627	852628	852629	852630	852631	852632	852633	852634	852635
	10	852636	852637	852638	852639	852640	852641	852642	852643	852644	852645	852646	852647
	12	852648	852649	852650	852651	852652	852653	852654	852655	852656	852657	852658	852659
	16	852660	852661	852662	852663	852664	852665	852666	852667	852668	852669	852670	852671
	20	852672	852673	852674	852675	852676	852677	852678	852679	852680	852681	852682	852683
	25	852684	852685	852686	852687	852688	852689	852690	852691	852692	852693	852694	852695

Heavy Duty L-Handle – Metric

NUMBERS													
	5	854200	854201	854202	854203	854204	854205	854206	854207	854208	854209	854210	854211
	6	854212	854213	854214	854215	854216	854217	854218	854219	854220	854221	854222	854223
	8	854224	854225	854226	854227	854228	854229	854230	854231	854232	854233	854234	854235
	10	854236	854237	854238	854239	854240	854241	854242	854243	854244	854245	854246	854247
	12	854248	854249	854250	854251	854252	854253	854254	854255	854256	854257	854258	854259
	16	854260	854261	854262	854263	854264	854265	854266	854267	854268	854269	854270	854271
	20	854272	854273	854274	854275	854276	854277	854278	854279	854280	854281	854282	854283
	25	854284	854285	854286	854287	854288	854289	854290	854291	854292	854293	854294	854295

Contact customer service for other metric sizes. Includes attachment ring.

Heavy Duty Button Handle Pin
MS17984, NAS1333-NAS1343
C3=Stainless Button Handle

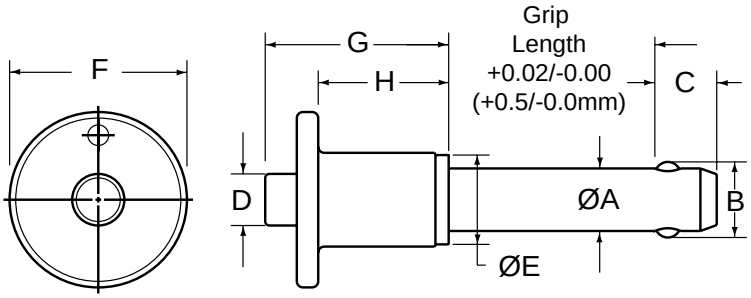

Heavy Duty Button Handle

- Heavy Duty solid handle in 303 series stainless steel provides additional impact resistance
- Includes hole and split ring for easy attachment of optional lanyard.
- All stainless steel construction provides additional corrosion resistance
- Body is made from high Strength Stainless Steel, 17-4 PH heat treated
- Meets or exceeds NASM 23460 specifications
- May be ordered with 4 locking balls for additional locking element tensile strength

Heavy Duty Button Handle Specifications – Inch

Nom Pin Dia	Pin Dia A Min	Pin Dia A Max	±0.005 B	+0.00/ -0.04 C	D	E	F	G	H
3/16 (#10)	.1870	.1885	.220	.260	1/4	7/16	13/16	13/16	5/8
1/4	.2470	.2485	.289	.290	1/4	7/16	13/16	13/16	5/8
5/16	.3095	.3110	.375	.330	1/4	7/16	7/8	29/32	5/8
3/8	.3720	.3735	.440	.365	5/16	9/16	1 1/8	1 1/32	3/4
7/16	.4345	.4360	.509	.380	5/16	9/16	1 1/8	1 3/32	3/4
1/2	.4970	.4985	.594	.460	7/16	23/32	1 3/8	1 3/16	13/16
9/16	.5595	.5610	.666	.510	7/16	23/32	1 3/8	1 3/8	1
5/8	.6220	.6235	.750	.580	37/64	27/32	1 5/8	1 1/2	1 1/16
3/4	.7470	.7485	.887	.670	37/64	15/16	1 7/8	1 21/32	1 5/32
7/8	.8720	.8735	1.046	.760	3/4	1 1/8	2 3/16	1 31/32	1 1/2
1	.9970	.9985	1.219	.890	3/4	1 3/16	2 3/16	2 1/8	1 1/2

Heavy Duty Button Handle Specifications – Metric

Nom Pin Dia	Pin Dia A Min	Pin Dia A Max	± 0.13 B	+0.0/- 1.0 C	D	E	F	G	H
5	4.92	4.96	5.54	6	6.4	11.1	20.6	20.6	15.9
6	5.92	5.96	6.99	7	6.4	11.1	20.6	20.6	15.9
8	7.92	7.96	9.42	8	6.4	11.1	22.2	23.0	15.9
10	9.92	9.96	11.86	9	7.9	14.3	28.6	27.8	19.1
12	11.92	11.96	14.45	10	11.1	18.3	34.9	34.9	25.4
16	15.92	15.96	19.00	14	14.7	21.4	41.3	38.1	27.0
20	19.92	19.96	24.08	17	14.7	23.8	47.6	42.1	29.4
25	24.92	24.96	30.94	22	19.1	30.2	55.6	54.0	38.1

Dimensions in millimeters

Pin Dia	Grip Length (inches)											
	0.5	0.75	1	1.25	1.5	1.75	2	2.5	3	4	5	6
Heavy Duty Button Handle – Inch												
3/16	806400	806401	806402	806403	806404	806405	806406	806408	806409	806411	806413	806415
1/4	806416	806417	806418	806419	806420	806421	806422	806424	806425	806427	806429	806431
5/16	806432	806433	806434	806435	806436	806437	806438	806440	806441	806443	806445	806447
3/8	806448	806449	806450	806451	806452	806453	806454	806456	806457	806459	806461	806463
7/16	806464	806465	806466	806467	806468	806469	806470	806472	806473	806475	806477	806479
1/2	806480	806481	806482	806483	806484	806485	806486	806488	806489	806491	806493	806495
9/16	806496	806497	806498	806499	806500	806501	806502	806504	806505	806507	806509	806511
5/8	806512	806513	806514	806515	806516	806517	806518	806520	806521	806523	806525	806527
3/4	806528	806529	806530	806531	806532	806533	806534	806536	806537	806539	806541	806543
7/8	806544	806545	806546	806547	806548	806549	806550	806552	806553	806555	806557	806559
1	806560	806561	806562	806563	806564	806565	806566	806568	806569	806571	806573	806575

PART NUMBERS

Pin Dia	Grip Length (mm)											
	10	15	20	25	30	40	50	60	70	80	90	100
Heavy Duty Button Handle – Metric												
5	855400	855401	855402	855403	855404	855405	855406	855407	855408	855409	855410	855411
6	855412	855413	855414	855415	855416	855417	855418	855419	855420	855421	855422	855423
8	855424	855425	855426	855427	855428	855429	855430	855431	855432	855433	855434	855435
10	855436	855437	855438	855439	855440	855441	855442	855443	855444	855445	855446	855447
12	855448	855449	855450	855451	855452	855453	855454	855455	855456	855457	855458	855459
16	855460	855461	855462	855463	855464	855465	855466	855467	855468	855469	855470	855471
20	855472	855473	855474	855475	855476	855477	855478	855479	855480	855481	855482	855483
25	855484	855485	855486	855487	855488	855489	855490	855491	855492	855493	855494	855495

PART NUMBERS

Contact customer service for other sizes. Includes attachment ring.

Jergens
SPECIALTY FASTENERS GROUP

Double Acting T, L, Ring Handles MS17988, MS17989, MS17990 NAS1353-NAS1366

Push/Pull Activation

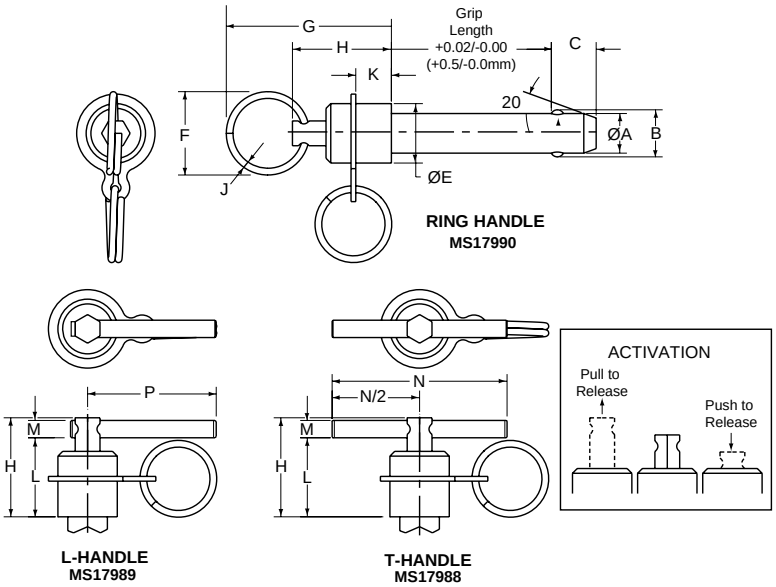

- Double Acting Pins are activated by push or pull motion
- All stainless steel construction provides additional corrosion resistance
- Body is made from high Strength Stainless Steel, 17-4 PH heat treated.
- Ideal for quick insertion and removal
- Four ball options available upon request
- Includes split ring for easy attachment of optional lanyard.
- Meets or exceeds NASM 23460 specifications
- Drive Out feature available upon request

Double Acting Specifications – Inch

Nom Pin Dia	Pin Dia A Min	Pin Dia A Max	B ±0.005	C Max	E Min	E Max	F Min	F Max	Max G	H	J	K Min	K Max	Min L	Dia M	N	P
3/16 (#10)	.1870	.1885	.220	.410	.360	.450	1.000	1.125	1.945	1.030	.080	.415	.480	.780	.109	1.500	1.300
1/4	.2470	.2485	.289	.410	.360	.450	1.000	1.125	1.945	1.030	.080	.415	.480	.780	.109	1.500	1.300
5/16	.3095	.3110	.375	.440	.390	.505	1.000	1.125	1.945	1.030	.080	.415	.480	.780	.109	1.500	1.300
3/8	.3720	.3735	.440	.510	.510	.630	1.000	1.125	2.025	1.090	.080	.445	.540	.830	.156	2.000	1.500
7/16	.4345	.4360	.509	.510	.510	.630	1.000	1.125	2.025	1.090	.080	.445	.540	.830	.156	2.000	1.500
1/2	.4970	.4985	.594	.590	.640	.755	1.000	1.125	2.200	1.270	.080	.445	.540	.880	.218	2.250	1.655
9/16	.5595	.5610	.666	.660	.640	.755	1.000	1.125	2.200	1.270	.080	.445	.540	.880	.218	2.250	1.655
5/8	.6220	.6235	.750	.750	.805	.870	1.312	1.500	2.690	1.465	.120	.510	.575	1.000	.250	2.500	1.810
3/4	.7470	.7485	.887	.790	.890	.960	1.312	1.500	2.690	1.465	.120	.530	.595	1.000	.250	2.500	1.810
7/8	.8720	.8735	1.046	.950	1.070	1.150	1.312	1.500	2.860	1.640	.120	.665	.730	1.180	.250	2.875	2.250
1	.9970	.9985	1.219	1.110	1.200	1.280	1.312	1.500	3.010	1.830	.120	.800	.865	1.320	.250	2.875	2.250

Double Acting Specifications – Metric

Nom Pin Dia	Pin Dia A Min	Pin Dia A Max	B ±0.13	C Max	E Min	E Max	F Min	F Max	Max G	H	J	K Min	K Max	Min L	Dia M	N	P
5	4.92	4.96	5.54	10.41	9.14	11.43	25.40	28.58	49.40	26.16	2.03	10.54	12.19	19.81	2.78	38.10	33.02
6	5.92	5.96	6.99	10.41	9.14	11.43	25.40	28.58	49.40	26.16	2.03	10.54	12.19	19.81	2.78	38.10	33.02
8	7.92	7.96	9.42	11.68	9.91	12.83	25.40	28.58	49.40	26.16	2.03	10.54	12.19	19.81	2.78	38.10	33.02
10	9.92	9.96	11.86	13.21	12.95	16.00	25.40	28.58	51.44	27.69	2.03	11.30	13.72	21.08	3.97	49.21	38.10
12	11.92	11.96	14.45	13.72	12.95	16.00	25.40	28.58	51.44	27.69	2.03	11.30	13.72	21.08	3.97	49.21	38.10
16	15.92	15.96	19.00	19.18	20.45	22.10	33.32	38.10	68.33	37.21	3.04	12.95	14.61	25.40	6.35	61.91	45.97
20	19.92	19.96	24.08	20.57	22.61	24.38	33.32	38.10	68.33	37.21	3.04	13.46	15.11	25.40	6.35	61.91	45.97
25	24.92	24.96	30.94	28.83	30.48	32.51	33.32	38.10	76.45	46.48	3.04	20.32	21.97	33.53	6.35	71.45	57.15

Dimensions in millimeters

PART NUMBERS	Grip Length (inches)											
Pin Dia	0.5	0.75	1	1.25	1.5	1.75	2	2.5	3	4	5	6
Double Acting Ring Handle – Inch – MS17990												
3/16	806200	806201	806202	806203	806204	806205	806206	806208	806209	806211	806213	806215
1/4	806216	806217	806218	806219	806220	806221	806222	806224	806225	806227	806229	806231
5/16	806232	806233	806234	806235	806236	806237	806238	806240	806241	806243	806245	806247
3/8	806248	806249	806250	806251	806252	806253	806254	806256	806257	806259	806261	806263
7/16	806264	806265	806266	806267	806268	806269	806270	806272	806273	806275	806277	806279
1/2	806280	806281	806282	806283	806284	806285	806286	806288	806289	806291	806293	806295
9/16	806296	806297	806298	806299	806300	806301	806302	806304	806305	806307	806309	806311
5/8	806312	806313	806314	806315	806316	806317	806318	806320	806321	806323	806325	806327
3/4	806328	806329	806330	806331	806332	806333	806334	806336	806337	806339	806341	806343
7/8	806344	806345	806346	806347	806348	806349	806350	806352	806353	806355	806357	806359
1	806360	806361	806362	806363	806364	806365	806366	806368	806369	806371	806373	806375
Double Acting T-Handle – Inch – MS17988												
3/16	803400	803401	803402	803403	803404	803405	803406	803408	803409	803411	803413	803415
1/4	803416	803417	803418	803419	803420	803421	803422	803424	803425	803427	803429	803431
5/16	803432	803433	803434	803435	803436	803437	803438	803440	803441	803443	803445	803447
3/8	803448	803449	803450	803451	803452	803453	803454	803456	803457	803459	803461	803463
7/16	803464	803465	803466	803467	803468	803469	803470	803472	803473	803475	803477	803479
1/2	803480	803481	803482	803483	803484	803485	803486	803488	803489	803491	803493	803495
9/16	803496	803497	803498	803499	803500	803501	803502	803504	803505	803507	803509	803511
5/8	803512	803513	803514	803515	803516	803517	803518	803520	803521	803523	803525	803527
3/4	803528	803529	803530	803531	803532	803533	803534	803536	803537	803539	803541	803543
7/8	803544	803545	803546	803547	803548	803549	803550	803552	803553	803555	803557	803559
1	803560	803561	803562	803563	803564	803565	803566	803568	803569	803571	803573	803575
Double Acting L-Handle – Inch – MS17989												
3/16	806000	806001	806002	806003	806004	806005	806006	806008	806009	806011	806013	806015
1/4	806016	806017	806018	806019	806020	806021	806022	806024	806025	806027	806029	806031
5/16	806032	806033	806034	806035	806036	806037	806038	806040	806041	806043	806045	806047
3/8	806048	806049	806050	806051	806052	806053	806054	806056	806057	806059	806061	806063
7/16	806064	806065	806066	806067	806068	806069	806070	806072	806073	806075	806077	806079
1/2	806080	806081	806082	806083	806084	806085	806086	806088	806089	806091	806093	806095
9/16	806096	806097	806098	806099	806100	806101	806102	806104	806105	806107	806109	806111
5/8	806112	806113	806114	806115	806116	806117	806118	806120	806121	806123	806125	806127
3/4	806128	806129	806130	806131	806132	806133	806134	806136	806137	806139	806141	806143
7/8	806144	806145	806146	806147	806148	806149	806150	806152	806153	806155	806157	806159
1	806160	806161	806162	806163	806164	806165	806166	806168	806169	806171	806173	806175

Contact customer service for other sizes.

PART NUMBERS	Grip Length (mm)											
Pin Dia	10	15	20	25	30	40	50	60	70	80	90	100
Double Acting Ring Handle – Metric												
5	855000	855001	855002	855003	855004	855005	855006	855007	855008	855009	855010	855011
6	855012	855013	855014	855015	855016	855017	855018	855019	855020	855021	855022	855023
8	855024	855025	855026	855027	855028	855029	855030	855031	855032	855033	855034	855035
10	855036	855037	855038	855039	855040	855041	855042	855043	855044	855045	855046	855047
12	855048	855049	855050	855051	855052	855053	855054	855055	855056	855057	855058	855059
16	855060	855061	855062	855063	855064	855065	855066	855067	855068	855069	855070	855071
20	855072	855073	855074	855075	855076	855077	855078	855079	855080	855081	855082	855083
25	855084	855085	855086	855087	855088	855089	855090	855091	855092	855093	855094	855095
Double Acting T-Handle – Metric												
5	853400	853401	853402	853403	853404	853405	853406	853407	853408	853409	853410	853411
6	853412	853413	853414	853415	853416	853417	853418	853419	853420	853421	853422	853423
8	853424	853425	853426	853427	853428	853429	853430	853431	853432	853433	853434	853435
10	853436	853437	853438	853439	853440	853441	853442	853443	853444	853445	853446	853447
12	853448	853449	853450	853451	853452	853453	853454	853455	853456	853457	853458	853459
16	853460	853461	853462	853463	853464	853465	853466	853467	853468	853469	853470	853471
20	853472	853473	853474	853475	853476	853477	853478	853479	853480	853481	853482	853483
25	853484	853485	853486	853487	853488	853489	853490	853491	853492	853493	853494	853495
Double Acting L-Handle – Metric												
5	854600	854601	854602	854603	854604	854605	854606	854607	854608	854609	854610	854611
6	854612	854613	854614	854615	854616	854617	854618	854619	854620	854621	854622	854623
8	854624	854625	854626	854627	854628	854629	854630	854631	854632	854633	854634	854635
10	854636	854637	854638	854639	854640	854641	854642	854643	854644	854645	854646	854647
12	854648	854649	854650	854651	854652	854653	854654	854655	854656	854657	854658	854659
16	854660	854661	854662	854663	854664	854665	854666	854667	854668	854669	854670	854671
20	854672	854673	854674	854675	854676	854677	854678	854679	854680	854681	854682	854683
25	854684	854685	854686	854687	854688	854689	854690	854691	854692	854693	854694	854695

Contact customer service for other metric sizes.

Heavy Duty Detent Pins
MIL-P-45952/1

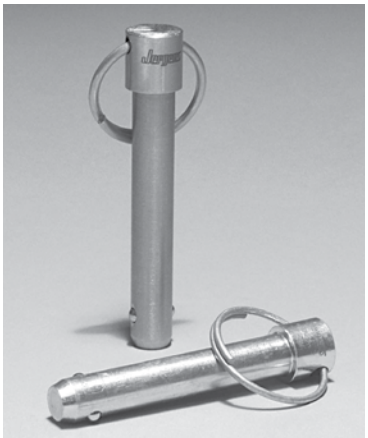

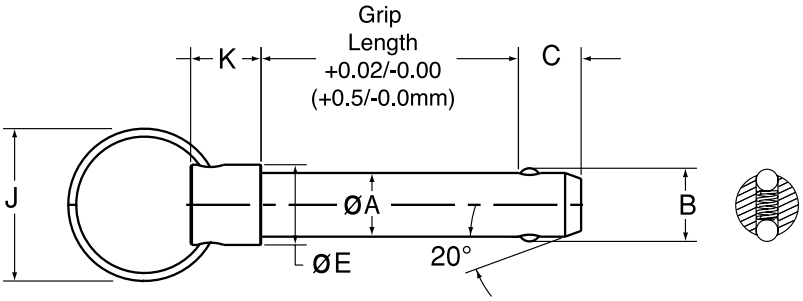

The Heavy Duty Detent Kwik-Lok® Pin is a high quality shoulder style alignment pin for applications that don't require the positive locking ball feature.

- Heavy duty spring and 2 spring loaded stainless steel locking balls provide high pull out force
- Available in 300 Series Stainless steel or heat treated alloy steel. Also in 17-4 PH heat treated stainless steel upon request
- Includes split ring for easy attachment of optional lanyard.

Heavy Duty Detent Specifications – Inch

Nom. Pin Dia	Dia. +0.000/ -0.003 A	Min. B	+0.00/ -0.06 C	Dia. +/–0.015 E	Dia. J	K	Double Shear Strength – (lbs) Alloy Steel Heat Treated	Double Shear Strength – (lbs) Stainless 300 Series	Pull Out Force (lbs)	Recommended Hole Diameter Max	Recommended Hole Diameter Min
3/16 (#10)	.1885	.200	.250	.375	1.187	.50	4,700	2,530	2 to 7	0.1940	0.1900
1/4	.2480	.280	.344	.375	1.187	.50	8,500	4,500	2 to 7	0.2540	0.2500
5/16	.3105	.360	.359	.438	1.187	.50	13,400	7,100	2 to 7	0.3165	0.3125
3/8	.3730	.430	.390	.500	1.187	.50	19,600	10,300	6 to 14	0.3790	0.3750
7/16	.4355	.495	.469	.625	1.187	.55	26,700	14,050	6 to 14	0.4425	0.4375
1/2	.4980	.570	.516	.625	1.187	.55	34,900	18,400	10 to 22	0.5050	0.5000
9/16	.5605	.645	.593	.625	1.687	.55	44,300	23,300	15 to 30	0.5675	0.5625
5/8	.6230	.720	.672	.750	1.687	.55	54,900	28,900	15 to 30	0.6300	0.6250
3/4	.7480	.860	.750	.875	1.687	.55	79,300	41,800	15 to 30	0.7570	0.7500
7/8	.8730	1.030	.859	1.000	2.187	.55	108,000	57,000	20 to 35	0.8820	0.8750
1	.9980	1.160	.984	1.125	2.187	.55	141,500	74,600	20 to 40	1.0100	1.0000

Heavy Duty Detent Specifications – Metric

Nom. Pin Dia	Dia. +0.000/ -0.080 A	Min. B	+0.0/ -1.5 C	Dia. +/– 0.4 E	Dia. J	K	Double Shear Strength – (kN) Alloy Steel Heat Treated	Double Shear Strength – (kN) Stainless 300 Series	Pull Out Force N	Recommended Hole Diameter Max	Recommended Hole Diameter Min
5	4.95	5.23	6.35	9.53	30.15	12.7	23	12	9 to 31	5.1	5
6	5.95	6.88	8.74	9.53	30.15	12.7	33	17	9 to 31	6.1	6
8	7.95	9.35	9.12	11.13	30.15	12.7	60	32	9 to 31	8.1	8
10	9.95	11.58	9.91	12.70	30.15	12.7	96	50	26 to 62	10.1	10
12	11.95	13.84	13.11	15.88	30.15	14.2	138	73	44 to 97	12.1	12
16	15.95	18.54	17.07	19.05	42.85	14.2	248	130	66 to 133	16.1	16
20	19.95	22.91	19.05	22.23	42.85	14.2	388	204	89 to 155	20.15	20
25	24.95	29.18	24.99	28.58	55.55	14.2	609	321	89 to 178	25.15	25

Dimensions in millimeters

Heavy Duty Detent Pins – Inch

PART NUMBERS	Pin Dia	Grip Length (inches) 0.5	0.75	1	1.25	1.5	1.75	2	2.5	3	4	5	6
Stainless Steel – Stainless Steel, 300 series													
	3/16	**803800**	**803801**	**803802**	**803803**	**803804**	**803805**	**803806**	**803808**	**803809**	**803811**	**803813**	**803815**
	1/4	**803816**	**803817**	**803818**	**803819**	**803820**	**803821**	**803822**	**803824**	**803825**	**803827**	**803829**	**803831**
	5/16	**803832**	**803833**	**803834**	**803835**	**803836**	**803837**	**803838**	**803840**	**803841**	**803843**	**803845**	**803847**
	3/8	**803848**	**803849**	**803850**	**803851**	**803852**	**803853**	**803854**	**803856**	**803857**	**803859**	**803861**	**803863**
	7/16	**803864**	**803865**	**803866**	**803867**	**803868**	**803869**	**803870**	**803872**	**803873**	**803875**	**803877**	**803879**
	1/2	**803880**	**803881**	**803882**	**803883**	**803884**	**803885**	**803886**	**803888**	**803889**	**803891**	**803893**	**803895**
	9/16	**803896**	**803897**	**803898**	**803899**	**803900**	**803901**	**803902**	**803904**	**803905**	**803907**	**803909**	**803911**
	5/8	**803912**	**803913**	**803914**	**803915**	**803916**	**803917**	**803918**	**803920**	**803921**	**803923**	**803925**	**803927**
	3/4	**803928**	**803929**	**803930**	**803931**	**803932**	**803933**	**803934**	**803936**	**803937**	**803939**	**803941**	**803943**
	7/8	**803944**	**803945**	**803946**	**803947**	**803948**	**803949**	**803950**	**803952**	**803953**	**803955**	**803957**	**803959**
	1	**803960**	**803961**	**803962**	**803963**	**803964**	**803965**	**803966**	**803968**	**803969**	**803971**	**803973**	**803975**
Alloy Steel – **High Strength Alloy Steel, 4130 heat treated and cadmium plated, yellow trivalent chromium passivation**													
	3/16	803600	803601	803602	803603	803604	803605	803606	803608	803609	803611	803613	803615
	1/4	803616	803617	803618	803619	803620	803621	803622	803624	803625	803627	803629	803631
	5/16	803632	803633	803634	803635	803636	803637	803638	803640	803641	803643	803645	803647
	3/8	803648	803649	803650	803651	803652	803653	803654	803656	803657	803659	803661	803663
	7/16	803664	803665	803666	803667	803668	803669	803670	803672	803673	803675	803677	803679
	1/2	803680	803681	803682	803683	803684	803685	803686	803688	803689	803691	803693	803695
	9/16	803696	803697	803698	803699	803700	803701	803702	803704	803705	803707	803709	803711
	5/8	803712	803713	803714	803715	803716	803717	803718	803720	803721	803723	803725	803727
	3/4	803728	803729	803730	803731	803732	803733	803734	803736	803737	803739	803741	803743
	7/8	803744	803745	803746	803747	803748	803749	803750	803752	803753	803755	803757	803759
	1	803760	803761	803762	803763	803764	803765	803766	803768	803769	803771	803773	803775

Contact customer service for other sizes.

Heavy Duty Detent Pins – Metric

PART NUMBERS	Pin Dia	Grip Length (mm) 10	15	20	25	30	40	50	60	70	80	90	100
Stainless Steel – Stainless Steel, 300 series													
	5	**853800**	**853801**	**853802**	**853803**	**853804**	**853805**	**853806**	**853807**	**853808**	**853809**	**853810**	**853811**
	6	**853812**	**853813**	**853814**	**853815**	**853816**	**853817**	**853818**	**853819**	**853820**	**853821**	**853822**	**853823**
	8	**853824**	**853825**	**853826**	**853827**	**853828**	**853829**	**853830**	**853831**	**853832**	**853833**	**853834**	**853835**
	10	**853836**	**853837**	**853838**	**853839**	**853840**	**853841**	**853842**	**853843**	**853844**	**853845**	**853846**	**853847**
	12	**853848**	**853849**	**853850**	**853851**	**853852**	**853853**	**853854**	**853855**	**853856**	**853857**	**853858**	**853859**
	16	**853860**	**853861**	**853862**	**853863**	**853864**	**853865**	**853866**	**853867**	**853868**	**853869**	**853870**	**853871**
	20	**853872**	**853873**	**853874**	**853875**	**853876**	**853877**	**853878**	**853879**	**853880**	**853881**	**853882**	**853883**
	25	**853884**	**853885**	**853886**	**853887**	**853888**	**853889**	**853890**	**853891**	**853892**	**853893**	**853894**	**853895**
Alloy Steel – High Strength Alloy Steel, 4130 heat treated and cadmium plated, yellow trivalent chromium passivation													
	5	853600	853601	853602	853603	853604	853605	853606	853607	853608	853609	853610	853611
	6	853612	853613	853614	853615	853616	853617	853618	853619	853620	853621	853622	853623
	8	853624	853625	853626	853627	853628	853629	853630	853631	853632	853633	853634	853635
	10	853636	853637	853638	853639	853640	853641	853642	853643	853644	853645	853646	853647
	12	853648	853649	853650	853651	853652	853653	853654	853655	853656	853657	853658	853659
	16	853660	853661	853662	853663	853664	853665	853666	853667	853668	853669	853670	853671
	20	853672	853673	853674	853675	853676	853677	853678	853679	853680	853681	853682	853683
	25	853684	853685	853686	853687	853688	853689	853690	853691	853692	853693	853694	853695

Contact customer service for other metric sizes.

Lanyard Specifications & Styles

Lanyard Specifications:

- 302/304 Stainless Steel cable, 1/16" (1.59 mm), with green nylon jacket, 1/8" (3.18 mm), meets Mil-DTL-83420
- Other cable diameters, other jacket colors (blue, black, clear) and special configuration styles by special order.

Stainless Steel Round Tab

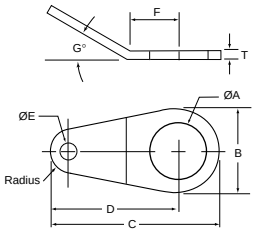

Hold Down Side of Tab

9 standard Tab Hole Diameters (ØA)
0.131-0.515" (3.3-13.1mm)

Aluminum Oval Tab

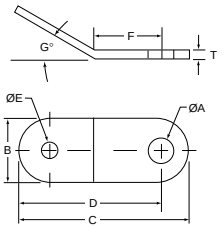

Hold Down Side of Tab

3 standard Tab Hole Diameters (ØA)
0.131", 0.196", 0.257"
(3.3mm, 4.9mm, 6.5mm)

Consult Table 1, Page 25 for Options.

Standard (W/Tab)

(Fig. 1)

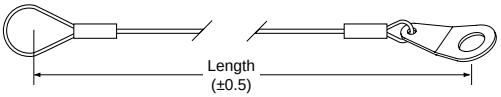

Standard (2 Loops)

(Fig. 2)

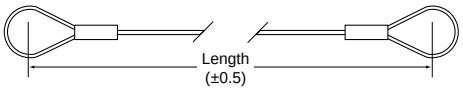

Standard (1 Loop)

(Fig. 3)

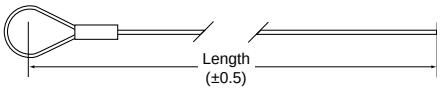

Loop/Eyelet, Stainless Steel

(Fig. 4)

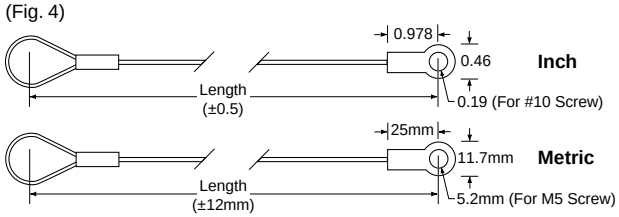

Tab Dimensions – Inch

Tab Style	±0.005 ØA	±0.01 B	±0.02 C	±0.02 D	±0.005 ØE	±0.016 Radius	±0.01 F	± 5 deg. G	±0.01 T	Material
Round Tab	See Table 1	0.688	1.316	1.004	0.125	0.160	0.406	12	0.048	300 Series Stain. Steel
Oval Tab	See Table 1	0.375	1.130	0.945	0.125	—	0.500	12	0.060	Aluminum

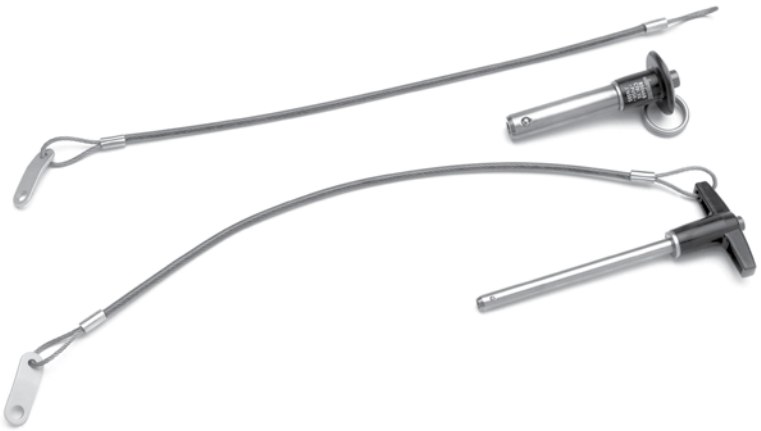

Ordering Lanyards Attached to Pins

Lanyard with a Tab (Fig. 1)

Length		Round Tab	Oval Tab
		Stainless Steel	Aluminum
inch	mm		
4	102	(Pin#) A*	(Pin#) M*
6	152	B*	N*
8	203	C*	P*
10	254	D*	Q*
12	305	H*	R*
16	406	J*	S*
20	508	K*	T*
24	610	L*	U*

Substitute the asterisk (*) with the proper hole size letter from Table 1.

Table 1 Tab Hole Size

Tab Mounting Hole Diameter		
Inch	mm	Size Letter
0.131	3.3	P
0.196	4.9	Q
0.257	6.5	R
0.283†	7.1†	S
0.320†	8.1†	T
0.379†	9.6†	U
0.406†	10.3†	V
0.468†	11.8†	W
0.515†	13.1†	Y

(†) These sizes only available in stainless steel round tabs

Lanyard without a Tab

Length		2 Loops	1 Loops (Pin)
		(Fig. 2)	(Fig. 3)
inch	mm		
4	102	(Pin#)EA	(Pin#)FA
6	152	EB	FB
8	203	EC	FC
10	254	ED	FD
12	305	EE	FE
16	406	EF	FF
20	508	EG	FG
24	610	EH	FH

Lanyard Loop/Eyelet (Fig. 4)

For Screw Size	
#10	M5
(Pin#)GA	(Pin#)HA
GB	HB
GC	HC
GD	HD
GE	HE
GF	HF
GG	HG
GH	HH

Part Numbering:

Lanyards with Tab, attached to Pins

To order Kwik-Lok® pins with attached lanyard and tab (fig. 1), photo on page 24. Specify the six digit pin number followed by two letters from the tables above to define the lanyard length, type of lanyard and tab mounting hole diameter. The first letter designates the length of the lanyard and the type of Tab. The second letter (from table 1) designates the size of the hole in the tab for the mounting screw.

Example A: For an Aluminum T-Handle with stainless steel pin body 1/2" x 1.0", with an attached 8" Lanyard and Round Stainless Steel Tab with a mounting hole diameter of 0.257" (6.5 mm), the part number is 801082CR.

Lanyards with 2 loops, 1 loop, or loop/eyelet

To order Kwik-Lok® pins with lanyard and 2 loops (fig. 2), 1 loop (fig. 3) or loop/eyelet (fig. 4), specify the six digit pin number followed by a two letter combination from above to define lanyard length, number of loops or loop/eyelet with mounting screw size.

Example B: For all Stainless Steel L Handle Pin, 1"x 6", with attached 24" (610 mm) lanyard and 2 Loops, the part number is 805775EH.

Example C: For all Stainless Steel Button Handle Pin, 6 x 40 mm, with attached 10" (254 mm) lanyard and Loop/Eyelet for M5 screws, the part number is 855417HD.

Note: Split rings are not included when attaching lanyards, unless customer specified. In that case add an R as a third letter to the extension.

Ordering Lanyards When Supplied Separately Without Pins

Lanyards with Tabs (Fig. 1)

Length		Round Tab	Oval Tab
		Stainless Steel	Aluminum
inch	mm		
4	102	**890054***	**890104***
6	152	**890056***	**890106***
8	203	**890058***	**890108***
10	254	**890060***	**890110***
12	305	**890062***	**890112***
16	406	**890066***	**890116***
20	508	**890070***	**890120***
24	610	**890074***	**890124***

Substitute the asterisk (*) with the proper hole size letter from Table 1.

Table 1 Tab Hole Size

Tab Mounting Hole Diameter		
Inch	mm	Size Letter
0.131	3.3	P
0.196	4.9	Q
0.257	6.5	R
0.283†	7.1†	S
0.320†	8.1†	T
0.379†	9.6†	U
0.406†	10.3†	V
0.468†	11.8†	W
0.515†	13.1†	Y

(†) These sizes only available in stainless steel round tabs

Lanyards without Tabs

Length		2 Loops	1 Loops (Pin)
		(Fig. 2)	(Fig. 3)
inch	mm		
4	102	**890204**	**890254**
6	152	**890206**	**890256**
8	203	**890208**	**890258**
10	254	**890210**	**890260**
12	305	**890212**	**890262**
16	406	**890216**	**890266**
20	508	**890220**	**890270**
24	610	**890224**	**890274**

Lanyard Loop/Eyelet (Fig. 4)

For Screw Size	
#10	M5
890304	**890404**
890306	**890406**
890308	**890408**
890310	**890410**
890312	**890412**
890316	**890416**
890320	**890420**
890324	**890424**

Part Numbering: Lanyards to be Supplied Separately

For lanyards with tabs, ordered separately without pins (photo page 24), specify the six digit pin number followed by the hole size letter from Table 1.

Example D: For a 24" (610 mm) lanyard with stainless steel round tab with a mounting hole diameter of 0.406" (10.3 mm), the part number is 890074V.

Jergens
SPECIALTY FASTENERS GROUP

NEW!

Standard Duty Detent Pins

Ideal for basic holding and removal applications that don't require a positive locking ball feature.

- **Body (Shank) is CRES 303 Stainless with CRES 316 stainless spring & ball**
- **Pins are activated by push or pull motion**
- **Includes split ring for attachment of optional general purpose lanyard**
- **Optional materials, sizes, and styles available**

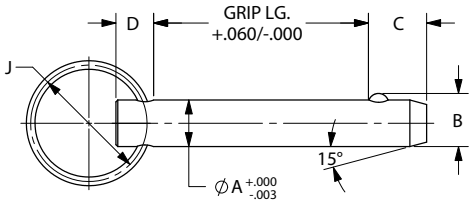

Standard Duty Detent Specifications - Inch

Nom. Pin Dia.	Dia. +0.000/-0.003					Double Shear Strength (lbs)	Pull Out Force (lbs)	Recommended Hole Diameter	
	A	B	C	D	J			Max.	Min.
3/16	.1875	.204	.200	.187	1.00	2,530	4 - 6	.1930	.1890
1/4	.2500	.286	.312	.220	1.00	4,500	5 - 7	.2555	.2515
5/16	.3125	.358	.375	.250	1.00	7,100	5 - 7	.3180	.3140
3/8	.3750	.426	.500	.250	1.00	10,300	7 - 10	.3805	.3765
1/2	.5000	.486	.625	.250	1.25	18,400	10 - 14	.5065	.5015
5/8	.6250	.710	.750	.375	1.25	28,900	23 - 26	.6315	.6265
3/4	.7500	.856	.937	.375	1.50	41,800	24 - 27	.7585	.7515
1	1.000	1.140	1.250	.500	1.50	74,600	30 - 33	1.0115	1.0015

Standard Duty Detent Pins - Inch

Pin Dia.	Grip length (inches)										
	0.5	1	1.5	2	2.5	3	3.5	4	4.5	5	6
3/16	804000	804001	804002	804003	804004	804005					
1/4	804011	804012	804013	804014	804015	804016					
5/16	804022	804023	804024	804025	804026	804027	804028	804029	804030		
3/8		804034	804035	804036	804037	804038	804039	804040	804041	804042	
1/2		804045	804046	804047	804048	804049	804050	804051	804052	804053	
5/8		804056	804057	804058	804059	804060	804061	804062	804063	804064	
3/4		804067	804068	804069	804070	804071	804072	804073	804074	804075	804076
1				804080	804081	804082	804083	804084	804085	804086	804087

Standard Duty Detent Pins

General Purpose Lanyard Specifications & Styles
(Available on Standard Duty Detent Pins only)

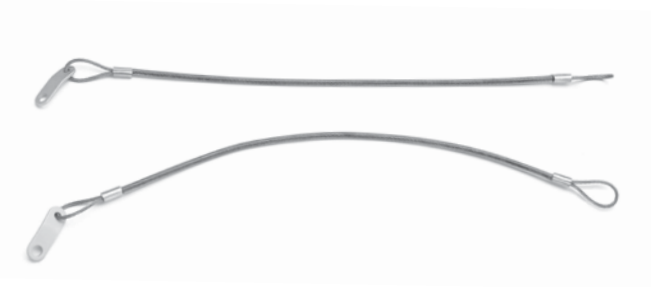

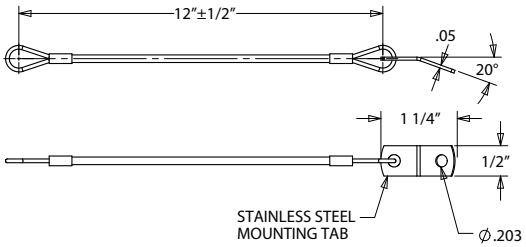

- **300 Series Stainless Steel cable, 1/16" (1.59 mm), with clear nylon jacket, 1/8" (3.18 mm)**
- **Other cable diameters, other jacket colors (blue, black, clear) and special configuration styles by special order.**

Ordering Lanyards Attached to Pins (Attached to Split Ring)
Standard cone loop with rectangular tab

Part Numbering: Specify the six digit standard detent pin number followed by the 3 digit suffix (i.e. 804614 - L12 - 1/4" x 2" pin with 12" lanyard attached to ring).

Ordering Lanyards Attached (Specify)

Length	Pin with Lanyard Part Number
6"	XXXXXX - L06
12"	XXXXXX - L12

Note: .203" mounting hole

Ordering Lanyards When Supplied Separately Without Pins

Part Numbering: Specify the six digit number below for the 6" or 12" lanyard.

Ordering Lanyards Separately

Length	Lanyard Part Number
6"	890340
12"	890341

Note: .203" mounting hole

Kwik-Lok® Pin Specifications

Kwik-Lok® Pin Specifications – Inch

Pin Dia (in)	Double Shear Resistance Minimum (lbs)*		Locking Element Tensile Strength Min (lbs)†	Recommended Hole Diameter (in)	
	Stainless Steel 17-4 PH Heat Treated	Alloy Steel Heat Treated Cadmium Plated		Max	Min
3/16 (#10)	5,150	4,600	200	0.1940	0.1900
1/4	9,200	8,200	230	0.2540	0.2500
5/16	14,400	12,800	510	0.3165	0.3125
3/8	20,700	18,400	575	0.3790	0.3750
7/16	28,500	25,000	710	0.4425	0.4375
1/2	36,900	32,800	1,160	0.5050	0.5000
9/16	46,700	41,600	1,420	0.5675	0.5625
5/8	57,800	51,400	2,070	0.6300	0.6250
3/4	83,200	74,600	2,950	0.7570	0.7500
7/8	112,500	100,000	3,900	0.8820	0.8750
1	147,200	131,000	5,480	1.0100	1.0000

Kwik-Lok® Pin Specifications – Metric

Pin Dia (mm)	Double Shear Resistance Minimum (kN)*		Locking Element Tensile Strength Min (N)†	Recommended Hole Diameter(mm)	
	Stainless Steel 17-4 PH Heat Treated	Alloy Steel Heat Treated Cadmium Plated		Max	Min
5	24	21	890	5.1	5
6	35	31	890	6.1	6
8	65	58	2,250	8.1	8
10	100	88	2,280	10.1	10
12	144	128	3,150	12.1	12
16	257	229	9,200	16.1	16
20	403	358	13,100	20.15	20
25	631	561	23,400	25.15	25

***** Double shear values are the minimum requirements according to NAS functionality tests.

† Locking element tensile strength values are the minimum requirements of NAS functionality tests. Pins may be special ordered with 4 locking balls for additional locking element tensile strength.

Military Specifications(MS) & National Aerospace Standards(NASM)

Jergens is a Department of Defense approved supplier of Quick Release Pins, under CAGE code 94882.
Certificate of Conformance is available upon request at time of order.
DFARS compliant material can be quoted upon request.

NAS Number 1333-1346 and 1353-1366 are available.

MS Numbers 17984-90 now refer to NASM 17984-90.

MS 17984 C 4 15

- 15 — Grip Length in tenths of an inch
  Example: 15 = 1.5”
- 4 — Pin Diameter in sixteenth of an inch
  Example: 4 = ¼”
- C — Pin Material (Body Only)
  Example: C = Stainless Steel
  S = Carbon Steel
- 17984 — Handle Style or Type
  17984 = Button Handle – Single Acting
  17985 = T-Handle – Single Acting
  17986 = L-Handle – Single Acting
  17987 = Ring Handle – Single Acting
  17988 = T-Handle – Double Acting
  17989 = L-Handle – Double Acting
  17990 = Ring Handle – Double Acting
- MS — Military Standard

Special Military and Aerospace size and configurations are available. Please contact customer service 1-866-KWIK-LOK (594-5565).

Material Specifications

Kwik-Lok® Pin

Component Part	Material
Bodies (Shank)	CRES 17-4 PH Stainless Steel
	Alloy Steel 4130
Balls	CRES 440C Stainless Steel*
Buttons	CRES 17-4 PH Stainless Steel
	Aluminum Alloy 2024
Springs	CRES 302 Stainless Steel
Handles	
T & L Handles	Aluminum (380) Casting
Button Handles	Aluminum Alloy 2024
Ring Handles	CRES 303 Stainless Steel
Heavy Duty T & L	CRES 303 Stainless Steel
Heavy Duty Button Handle	CRES 303 Stainless Steel
Recessed Button Handle	CRES 300 Series Stainless Steel
Collar	CRES 303 or 304 Stainless Steel

Kwik-Lok® Lifting Pin

Component Part	Material
Bodies (Shank)	CRES 17-4 PH Stainless Steel
Balls	CRES 440C Stainless Steel*
Buttons	CRES 303 Stainless Steel
Lift Ring	Forged 17-4 PH Stainless Steel
Springs	CRES 302 Stainless Steel

Detent Pins

Component Part	Material
Bodies (Shank)	CRES 303 Stainless Steel
	Alloy Steel 4130
Balls	CRES 440C Stainless Steel*
Springs	CRES 302 Stainless Steel
Head	CRES 303 Stainless Steel
	Alloy Steel 4130

* Locking Balls also available in 302 Stainless Steel by special order.
Actual locking element tensile strength is reduced by lower strength alloys.
Ordering special pins with 4 balls will increase locking element tensile strength above NAS functionality test requirements.

Heat Treatment:

- 17-4 PH Stainless Steel: Condition H-900, Rockwell C40 Min per MIL-H-6875
- 4130 Alloy Steel: Rockwell C36-40

Surface Treatment:

- CRES Parts: Passivate per AMS-QQ-P-35
- Alloy Steel Parts: Cadmium plate per QQ-P-416, Type II, Class 2
- Aluminum Alloy Parts: Anodize per MIL-A-8625 Type I or II per MIL-C-5541 Class 1A
- Aluminum Handles: Color Black

Jergens Kwik-Lok® Pins are designed and manufactured to meet or exceed these standards.

Jergens
SPECIALTY FASTENERS GROUP

Kwik-Lok® Lifting Pins

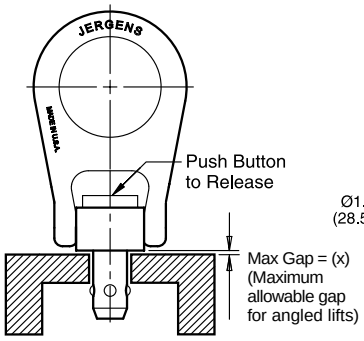

Typical Application

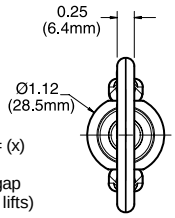

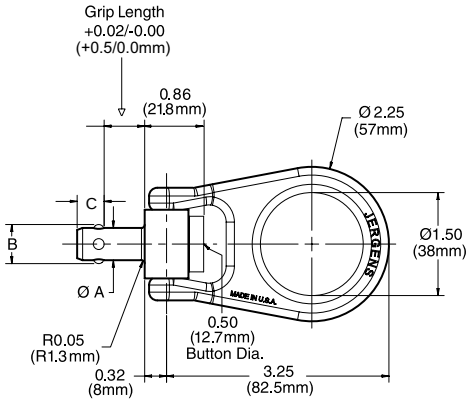

- All stainless steel construction and components
- 17-4 PH stainless steel forged, heat treated lifting ring with large opening
- Lifting ring with Load Spreader Bar
- 5 to 1 strength factor
- 360° Swivel
- 180° Pivot
- Also chosen for lashing applications

Lifting Pin Specifications – Inches

Nom Pin Dia	Max. Load Rating (lbs)*	ØA		±0.005 B	+0.00/ -0.04 C	Max. Gap (X) (in)	Required Hole Diameter (in)	
		Min	Max				Max	Min
1/4	400	.2470	.2485	.286	.290	0.06	0.2540	0.2500
5/16	700	.3095	.3110	.375	.330	0.06	0.3165	0.3125
3/8	1,000	.3720	.3735	.440	.365	0.06	0.3790	0.3750
1/2	1,250	.4970	.4985	.594	.460	0.06	0.5050	0.5000
5/8	1,400	.6220	.6235	.750	.580	0.06	0.6300	0.6250

Lifting Pin Specifications – Metric

Nom Pin Dia	Max. Load Rating (kN)*	ØA		±0.13 B	+0.0/ -1.0 C	Max. Gap (X) (mm)	Required Hole Diameter (mm)	
		Min	Max				Max	Min
10	4.4	9.92	9.96	12.00	9	1.5	10.1	10.0
12	5.5	11.92	11.96	14.27	10	1.5	12.1	12.0
16	6.2	15.92	15.96	19.00	14	1.5	16.1	16.0

*Dimensions in millimeters

LIFT ID™ AUTOMATED INSPECTION AND COMPLIANCE SYSTEM

To add **Lift ID**™ to Hoist Ring Add "F" to the end of the part number **Example: 23414F**

CE CERTIFIED

Important: Please review all operating instructions that are included in the packaging or online before use.

Note: If the required hole size cannot be achieved; Jergens recommends the use of our threaded receptacle (see page 31); Please Contact Customer Service with any questions.

Kwik-Lok® Lifting Pin – Inches

Dia.	Grip Length							
	0.50	0.75	1.00	1.25	1.50	2.00	2.50	3.00
1/4	**807216**	**807217**	**807218**	**807219**	**807220**	**807222**	**807224**	**807225**
5/16	**807232**	**807233**	**807234**	**807235**	**807236**	**807238**	**807240**	**807241**
3/8	**807248**	**807249**	**807250**	**807251**	**807252**	**807254**	**807256**	**807257**
1/2	**807280**	**807281**	**807282**	**807283**	**807284**	**807286**	**807288**	**807289**
5/8	**807312**	**807313**	**807314**	**807315**	**807316**	**807318**	**807320**	**807321**

Kwik-Lok® Lifting Pin – Metric

Dia.	Grip Length							
	15	20	25	30	35	40	50	75
10	**857237**	**857238**	**857239**	**857240**	**857299**	**857241**	**857242**	**857307**
12	**857249**	**857250**	**857251**	**857252**	**857300**	**857253**	**857254**	**857308**
16	**857261**	**857262**	**857263**	**857264**	**857301**	**857265**	**857266**	**857309**

*Lifting load ratings are based on tests with hardened tool steel plates or shoulder bushings. Load ratings may be reduced if oversized holes or parent material under 80,000 psi tensile are used.

*Kwik-Lok® Lifting Pins are not suited for continuous rotation under load.

Threaded Receptacles

High Strength Stainless Steel, 17-4 PH heat treated

KLP Threaded Receptacles – Inch

For Kwik-Lok® Lifting Pin		Use Receptacle Part Number	Thread Size A	Overall Length B	Head Height C	Head Flats D	Diameter E	Install Torque (ft-lbs)
Size	Part Number							
1/4×0.5	807216	**845100**	1/2-13	0.930	0.16	.62	.75	7
5/16×0.5	807232	**845101**	3/4-10	1.100	0.28	.87	1.12	18
3/8×0.5	807248	**845102**	3/4-10	1.100	0.28	.87	1.12	25
1/2×0.5	807280	**845103**	1 1/8-7	1.625	0.37	1.25	1.62	47
5/8×0.5	807312	**845104**	1 1/8-7	1.625	0.37	1.25	1.62	53

KLP Threaded Receptacles – Metric

For Kwik-Lok® Lifting Pin		Use Receptacle Part Number	Thread Size A	Overall Length B	Head Height C	Head Flats D	Diameter E	Install Torque (kg•m)
Size	Part Number							
10×15	857237	**855100**	M20x2.5	29	7	26	34.8	3.6
12×15	857249	**855101**	M22x2.5	37	9	30	34.8	5.0
16×15	857261	**855102**	M27x3	41	10	32	41.2	6.9

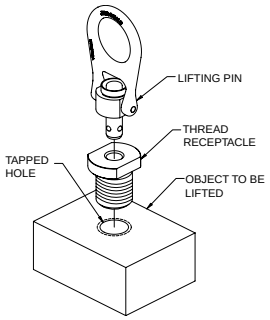

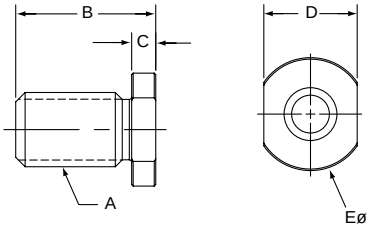

Kwik-Lok® Lifting Pin Kits – Inch

Kit Part Number	Kwik-Lok® Lifting Pin Size	Receptacle Thread Size	Kwik-Lok® Lifting Pin Part Number	Threaded Receptacle Part Number
847216	1/4 x 0.5	1/2-13	807216	845100
847232	5/16 x 0.5	3/4-10	807232	845101
847248	3/8 x 0.5	3/4-10	807248	845102
847280	1/2 x 0.5	1 1/8-7	807280	845103
847312	5/8 x 0.5	1 1/8-7	807312	845104

*Each kit contains one Kwik-Lok® lifting pin and one corresponding Threaded Receptacle.

Kwik-Lok® Lifting Pin Kits – Metric

Kit Part Number	Kwik-Lok® Lifting Pin Size	Receptacle Thread Size	Kwik-Lok® Lifting Pin Part Number	Threaded Receptacle Part Number
877237	M10 x 15	M20 x 2.5	857237	855100
877249	M12 x 15	M22 x 2.5	857249	855101
877261	M16 x 15	M27 x 3	857261	855102

*Each kit contains one Kwik-Lok® lifting pin and one corresponding Threaded Receptacle.

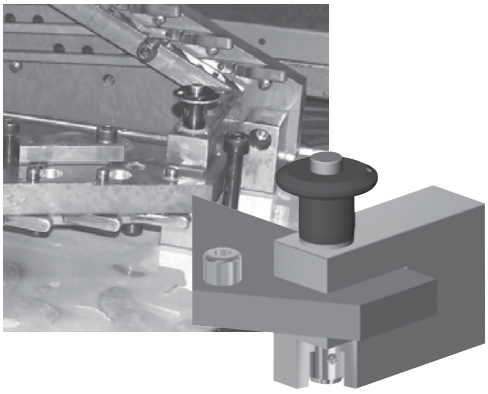

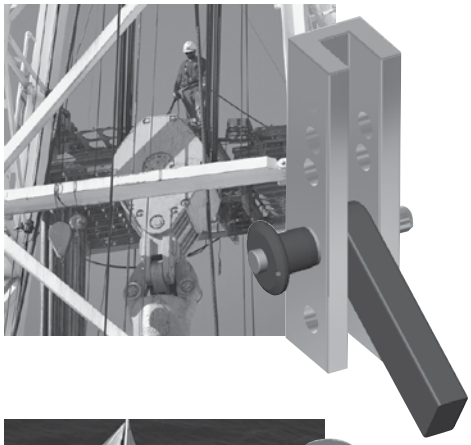

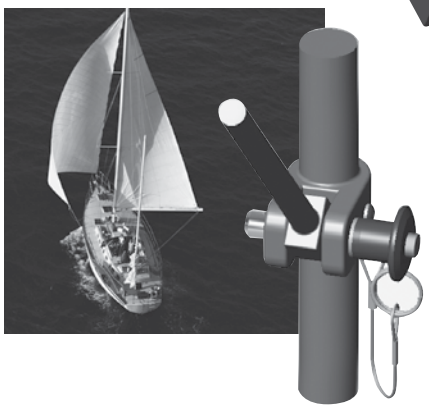

Diverse Application Needs

Manufacturing:
Jigs and Fixturing
Packaging Machinery
Paper Mills/Machinery
Conveyor Systems
Material Handling Equipment
Textile Machinery
Forming and Fabricating Equipment
Plastic Injection Molding

Aviation/Military:
Tank Doors and Lids
(Various process industries)
Landing Gear
Drop Tanks
Ordnance
Cargo Nets
Aircraft Seating
Aerial Spraying Equipment
Gliders

General Industrial:
Scaffolding Equipment
Mining Equipment
Drilling Equipment
Lifting Equipment
(Hoists, Slings, Cables, etc.)
Trailer Beds

Medical Equipment:
Hospital Beds and Cots
Medical Equipment
Portable X-Ray Equipment
Wheelchairs

Recreational Industry:
Hot Air Balloons
Recreational Vehicles
Racing Cars
(hoods, transmissions, steering wheels)
Weight Machines
Jet Skis
Hang Gliders
Mountain Climbing Equipment

Marine Industry (Recreation/Commercial):
Anchors
Bimini Covers
Outriggers
Boat Trailers
Rudder/Tiller Attachments
Sailboat Rigging
Commercial Boat Rigging

Need a Special Size or Configuration?

See page 33 and contact Jergens for more information.

3D solid models available in SolidWorks® (.SLDPRT) and other formats, downloadable from www.jergensinc.com.

SolidWorks® is a registered trademark of SolidWorks Corporation.

Kwik-Lok® Pin Special Application Information

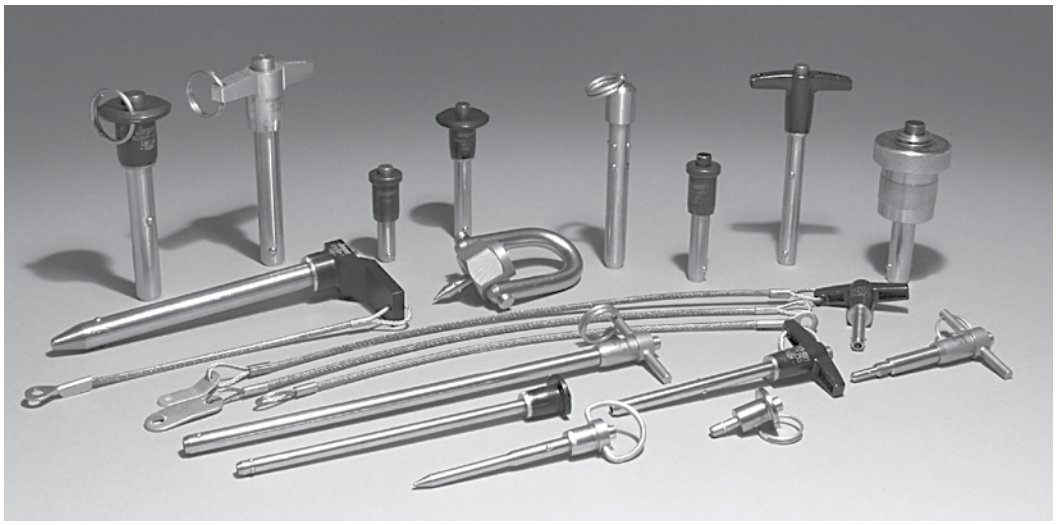

Special Kwik-Lok® Pins

If you don't see the exact Kwik-Lok® Pin to meet your application requirements, photocopy the form below, indicate your requirements, and send to Jergens.

Quotation Request Worksheet (online at www.jergensinc.com/tools/pins_rfq.aspx)

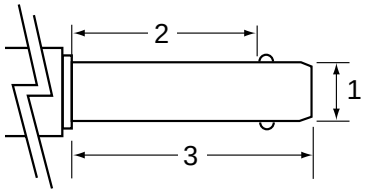

1. Pin Diameter _____

2. Grip Length _____

3. Overall Length _____

***For special Shank/Lanyard configurations – Please provide drawing or sketch.**

Application (describe): _____

Handle Style: ☐ T ☐ L ☐ Ring ☐ Button ☐ Recessed Button ☐ Kwik-Lok® Lifting Pins ☐ Special _____

Body Material: ☐ 17-4 PH heat treated Stainless Steel ☐ Alloy Steel, heat treated, cadmium plated

☐ Other (describe) _____

Number of Locking Elements: ☐ 2 balls(standard) ☐ 4 balls Attach Split Ring? _____ (yes/no)

*Lanyard Length: _____ (inch or mm) SS cable with nylon color _____ (Green,Black,Clear or other)

Attach Lanyard directly to Pin without split ring? _____ (yes/no) Attach to Split Ring? _____ (yes/no)

Tabs: ☐ Round (Stainless Steel) ☐ Oval(Aluminum) Mounting Hole Size _____ (inch or mm)

Loop/Eyelet (Stainless Steel) with Mounting Hole: ☐ 0.19" for #10 screw ☐ 5.2mm for M5 screw

Quantity Required: _____ (pieces) Request date: _____ Annual Requirements _____ (pieces)

NAME: _____ POSITION/TITLE: _____

COMPANY: _____ ADDRESS: _____

CITY: _____ STATE: _____ COUNTRY: _____ POSTAL CODE: _____

TELEPHONE: _____ FAX: _____ E-MAIL: _____

PRECISION PARTS FOR MILITARY APPLICATIONS

Jergens is an ISO 9001:2008 certified, government-approved manufacturer. We are your complete source for mil-spec Kwik-Lok® pins, spring-loaded devices, threaded inserts, and threaded components and washers. We also offer workholding components, locating components, handles, knobs and handwheels, lifting products that include center-pull and side-pull styles of hoist rings, and toggle clamps.

Jergens can offer quick turnaround on special orders, low or no minimums, and engineering expertise that results in our ability to answer and help with technical questions. We offer the advantages of relationship and know-how.

- **MS, NAS, DFARS, and RoHS Compliant Parts Available**
- **Military Drawings Available in 3D Solid Models (Multiple Formats) from www.jergensinc.com**
- **Manufacturing #: 697830**
- **FSCMI Cage Code: 94882**

Jergens®

Spring Loaded Devices

Plungers:
Plungers, Spring 38–39
Plungers, Spring, Metric.... 40–41
Plungers, Shortie Spring 42
Plungers, Shortie Spring
Stainless Steel 42
Plungers, Shortie Spring, Metric 43
Ball Plungers.... 44
Ball Plungers, Stainless Steel.... 45
Ball Plungers, Metric 45
Plungers, Press Fit 45
Plungers, Special Spring and Ball.... 46
Plungers, Hand Retractable Style 47
Plungers, Pull Ring Retractable 48
Plungers, L Handle Hand
Retractable Locking 49
Plunger Wrenches 43
Quick Reference Index 37
Spring Locating Pins 50–51
Application Ideas.... 51
Installation Data 51
Installation Tools 51
Eccentric Liners 51
Spring Stops 52
Button Type 52
Flat Button Type 52
Tang Type.... 52

Jergens®
MANUFACTURING EFFICIENCY

Jergens Spring & Ball Plungers Last Longer

...And Here's Why!

Spring Plungers

Spring Plunger tips are manufactured using case hardened steel. This means they have a protective shell, about .10" deep.

Jergens Spring and Ball Plungers have accurate end forces, are easy to install, and are competitively priced. They are manufactured in the U.S.A. in a ISO 9001:2008 certified quality system.

And if these aren't enough reasons to specify Jergens Spring and Ball Plungers, here are a few more:

Better Point of Contact

The Jergens plungers are turned and the tips generated in one smooth continuing process. This results in a constant radius tip, perfectly tangent to the point where the tip joins the shaft. Conventional two step, turn and grind operations, can leave ridges on the shaft at the tip junction and can also produce out-of-round tips. These, in turn, can gouge or score finely finished parts or can cause detent cams to hang up or stick.

Extra Length Springs for Longer Life

The longer the spring, the longer its life. Jergens goes to extra lengths to minimize the thickness of the base flanges on all of its plungers. That allows us to use longer springs with less chance for fatigue and breakage.

Improved Plunger to Body Alignment

The long base flange allows for a larger bearing surface. This means improved plunger-to-body alignment, truer travel, and much improved side load characteristics.

Tighter Fit Resists Contamination

Closer machining tolerances, minimum plunger-to-body clearance, and smoother plunger finish make Jergens plungers fit more snugly in the plunger bore. This improves plunger alignment and provides extra resistance to contaminant entry. The results: dirt and grit cannot get to the bearing surfaces to shorten the life of the plunger.

Better Plunger Adjustment

The Solid Drive Design assures that during removal or adjustment of the plunger, the whole plunger is moving, not just the set screw. This means no lost parts or springs falling out of the plunger.

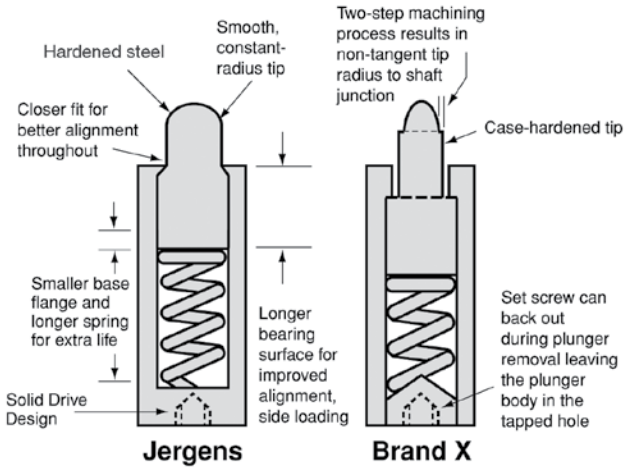

Ball Plungers

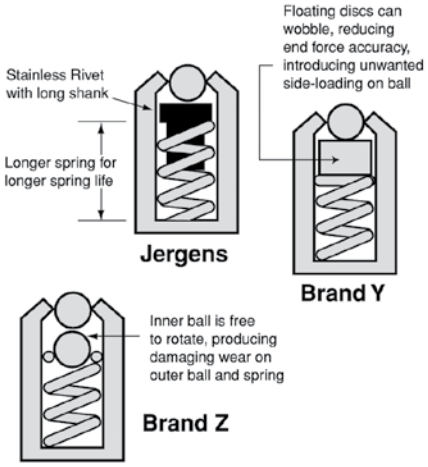

Positive Control of Spring Pressure

Accurate spring alignment is maintained by using a stainless rivet with a long shank on larger sizes of Jergens Ball Plungers. This precisely positions the spring for more accurate ball travel and provides positive control of spring pressure. Conventional floating discs are easily misaligned, while the rotation of the inner ball on dual-ball plungers results in less wearability on both the spring and the ball.

Longer Spring Life

By minimizing the lining pin head thickness, Jergens is able to use the longest possible springs. This, of course, means less fatigue and longer spring life.

Uniform Ball Projection

The distance by which the ball projects from the body of the plunger must be uniform from plunger to plunger. This uniformity is maintained by precisely controlling the crimping pressure applied to the neck of the plunger. Accurate machine controls plus rigid inspection procedures keep variances in ball projection to within ±.005".

Quick Reference

Spring Plungers.....38–41
Stainless Steel – Inch.....38
Delrin Tip – Inch 39
Stainless Steel – Metric.....40
Delrin Tip – Metric 41

Shortie Spring Plungers 42–43
Shortie Spring Plungers Stainless Steel – Inch.....42
Shortie Spring Plungers – Metric....43

Plunger Wrenches 43

Ball Plungers 44–45
Ball Plungers – Inch.....44
Ball Plungers – Metric 45

Press Fit Plungers.....45
Stainless Steel Press Fit Plungers.....45

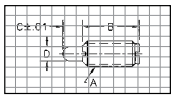

Special Spring and Ball Plunger Request Worksheet.....46

Retractable Plungers.....47–49
Hand Retractable Style.....47
Pull Ring Style 48
Locking Style.....49

Spring Locating Pins.....50–51
Installation Data.....51
Application Ideas.....51
Eccentric Liners.....51
Installation Tools.....51

Spring Stops 52

Jergens
SPECIALTY FASTENERS GROUP

Spring Plungers
Inch

SOLID DRIVE

- Single unit construction
- No set screw to separate from plunger body
- Better reliability
- Steel tips are case hardened steel
- Close tolerance between tip and body

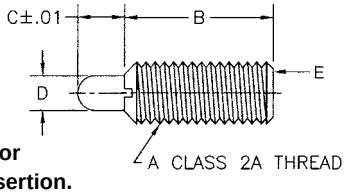

Hex drive in rear for spring plunger insertion.

Specials available, see page 46 for Plunger Quote Request worksheet.

- Material: Body – Low Carbon Steel, Black Oxide or 303-Stainless Steel
  Tip – Steel or Stainless Steel
- Thread: 2A-UNC
- 3D Solid Models are available in multiple formats from www.jergensinc.com
- Conforms to TCMA dimensional standards

Plunger tips are color coded to indicate light or heavy force:
Silver = Steel Tip, Light Force
Black = Steel Tip, Heavy Force

Unlike conventional spring plungers, the body of a Jergens Solid Drive Plunger is machined in one piece. The spring is assembled from the top so that there is no need for a set screw. Solid Drive Plungers do not have a set screw which can loosen or separate from the plunger body. The advantage is no lost springs, no need for "easy-out" tools. When adjusting Solid Drive, you can be sure the plunger body is turning and not a set screw.

Inch – Steel & Stainless Steel Tip With Locking Element

SS Part Number	Steel Part Number	Thread Size A	Initial Force (lbs)	Final Force (lbs)	B	C	D	Hex Size E
27336	**27321**	6-32	0.5	1.5	17/32	1/16	0.046	3/64
26936	**26921**	6-32	1.5	4.5	17/32	1/16	0.046	3/64
27337	**27322**	8-32	0.7	2.3	5/8	3/32	0.070	5/64
26937	**26922**	8-32	2.7	7.3	5/8	3/32	0.070	5/64
27338	**27323**	10-32	1.3	2.7	3/4	1/8	0.093	3/32
26938	**26923**	10-32	2.9	11.1	3/4	1/8	0.093	3/32
27339	**27324**	1/4-20	1.0	4.0	1	3/16	0.119	1/8
26939	**26924**	1/4-20	3.0	13.0	1	3/16	0.119	1/8
27340	**27325**	1/4-28	1.0	4.0	1	3/16	0.119	1/8
26940	**26925**	1/4-28	3.0	13.0	1	3/16	0.119	1/8
27341	**27326**	5/16-18	1.5	4.5	1	3/16	0.135	5/32
26941	**26926**	5/16-18	3.0	15.0	1	3/16	0.135	5/32
27342	**27327**	3/8-16	2.8	7.2	1 1/8	3/16	0.186	3/16
26942	**26927**	3/8-16	5.5	14.5	1 1/8	3/16	0.186	3/16
27343	**27328**	1/2-13	2.7	9.3	1 1/4	1/4	0.248	1/4
26943	**26928**	1/2-13	6.6	17.4	1 1/4	1/4	0.248	1/4
27344	**27329**	5/8-11	3.5	10.5	1 1/2	5/16	0.310	5/16
26944	**26929**	5/8-11	10.5	25.5	1 1/2	5/16	0.310	5/16
27345	**27330**	3/4-10	5.5	14.5	1 3/4	5/16	0.374	3/8
26945	**26930**	3/4-10	6.7	37.3	1 3/4	5/16	0.374	3/8
—	**27311***	1-8	10.0	25.0	2 13/32	1/2	0.499	3/8
—	**26911***	1-8	16.0	68.0	2 13/32	1/2	0.499	3/8

Without Locking Element

SS Part Number	Steel Part Number
27031	**27221**
27011	**26821**
27032	**27222**
27012	**26822**
27033	**27223**
27013	**26823**
27034	**27224**
27014	**26824**
27035	**27225**
27015	**26825**
27036	**27226**
27016	**26826**
27037	**27227**
27017	**26827**
27038	**27228**
27018	**26828**
27039	**27229**
27019	**26829**
27040	**27230**
27020	**26830**
—	**27211***
—	**26811***

* Not available in DRIVE construction.

NOTE: For easy insertion of Spring Plungers with locking elements, the tapped hole should be countersunk at least .030-.045" (0.76-1.14mm) larger than the major diameter of the plunger.

Spring Plungers
Inch

SOLID DRIVE

- Single unit construction
- No set screw to separate from plunger body
- No need for “easy-out” tools
- Better reliability
- Steel tips are case hardened steel
- Close tolerance between tip and body

- Material: Body – Low Carbon Steel, Black Oxide or 303-Stainless Steel
  Tip – Delrin
- Thread: 2A-UNC
- 3D Solid Models are available in multiple formats from www.jergensinc.com
- Conforms to TCMA dimensional standards

Plunger tips are color coded to indicate light or heavy force:

White	= Delrin Tip, Light Force
Blue	= Delrin Tip, Heavy Force

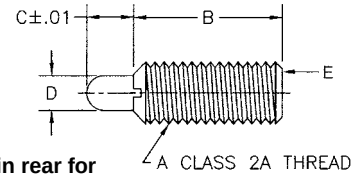

Hex drive in rear for spring plunger insertion.

Unlike conventional spring plungers, the body of a Jergens Solid Drive Plunger is machined in one piece. The spring is assembled from the top so that there is no need for a set screw. Solid Drive Plungers do not have a set screw which can loosen or separate from the plunger body. The advantage is no lost springs, no need for “easy-out” tools. When adjusting Solid Drive, you can be sure the plunger body is turning and not a set screw.

Specials available, see page 46 for Plunger Quote Request worksheet.

Inch – Delrin Tip With Locking Element

SS Part Number	Steel Part Number	Thread Size A	Initial Force (lbs)	Final Force (lbs)	B	C	D	Hex Size E
30936	**30921**	6-32	0.5	1.5	17/32	1/16	0.046	3/64
30536	**30521**	6-32	1.5	4.5	17/32	1/16	0.046	3/64
30937	**30922**	8-32	0.7	2.3	5/8	3/32	0.070	5/64
30537	**30522**	8-32	2.7	7.3	5/8	3/32	0.070	5/64
30938	**30923**	10-32	1.3	2.7	3/4	1/8	0.093	3/32
30538	**30523**	10-32	2.9	11.1	3/4	1/8	0.093	3/32
30939	**30924**	1/4-20	1.0	4.0	1	3/16	0.119	1/8
30539	**30524**	1/4-20	3.0	13.0	1	3/16	0.119	1/8
30940	**30925**	1/4-28	1.0	4.0	1	3/16	0.119	1/8
30540	**30525**	1/4-28	3.0	13.0	1	3/16	0.119	1/8
30941	**30926**	5/16-18	1.5	4.5	1	3/16	0.135	5/32
30541	**30526**	5/16-18	3.0	15.0	1	3/16	0.135	5/32
30942	**30927**	3/8-16	2.8	7.2	1 1/8	3/16	0.186	3/16
30542	**30527**	3/8-16	5.5	14.5	1 1/8	3/16	0.186	3/16
30943	**30928**	1/2-13	2.7	9.3	1 1/4	1/4	0.248	1/4
30543	**30528**	1/2-13	6.6	17.4	1 1/4	1/4	0.248	1/4
30944	**30929**	5/8-11	3.5	10.5	1 1/2	5/16	0.310	5/16
30544	**30529**	5/8-11	10.5	25.5	1 1/2	5/16	0.310	5/16
30945	**—**	3/4-10	5.5	14.5	1 /34	5/16	0.374	3/8
30545	**—**	3/4-10	6.7	37.3	1 3/4	5/16	0.374	3/8

Without Locking Element

SS Part Number	Steel Part Number
30510	**30821**
30500	**30421**
30511	**30822**
30501	**30422**
30512	**30823**
30502	**30423**
30513	**30824**
30503	**30424**
30514	**30825**
30504	**30425**
30515	**30826**
30505	**30426**
30516	**30827**
30506	**30427**
30517	**30828**
30507	**30428**
30518	**30829**
30508	**30429**
30519	**—**
30509	**—**

NOTE: For easy insertion of Spring Plungers with locking elements, the tapped hole should be countersunk at least .030-.045" (0.76-1.14mm) larger than the major diameter of the plunger.

Jergens
SPECIALTY FASTENERS GROUP

Spring Plungers
Metric

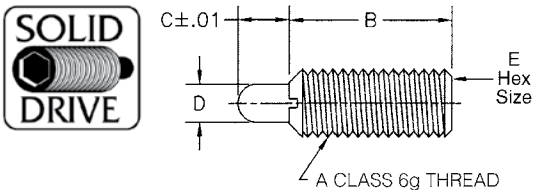

The hex drive in the rear of the spring plunger is for plunger insertion.

Specials available, see page 46 for Plunger Quote Request worksheet.

- Material: Body – Low Carbon Steel, Black Oxide or 303-Stainless Steel
  Tip – Steel or Stainless Steel
- Thread: 2A-UNC
- 3D Solid Models are available in multiple formats from www.jergensinc.com
- Conforms to TCMA dimensional standards

Unlike conventional spring plungers, the body of a Jergens Solid Drive Plunger is machined in one piece. The spring is assembled from the top so that there is no need for a set screw. Solid Drive Plungers do not have a set screw which can loosen or separate from the plunger body. The advantage is no lost springs, no need for "easy-out" tools. When adjusting Solid Drive, you can be sure the plunger body is turning and not a set screw.

Metric – Steel & Stainless Steel Tip With Locking Element

SS Part Number	Steel Part Number	Thread Size A	Initial Force (kg)	Final Force (kg)	B	C	D	Hex Size E
30890	**27250**	M4 x 0.7	0.32	1.04	16	2.5	1.78	2.0
30490	**26850**	M4 x 0.7	1.22	3.29	16	2.5	1.78	2.0
30891	**27251**	M5 x 0.8	0.59	1.22	19	3.0	2.36	2.5
30491	**26851**	M5 x 0.8	1.31	5.00	19	3.0	2.36	2.5
30892	**27252**	M6 x 1.0	0.45	1.80	25	5.0	3.02	3.0
30492	**26852**	M6 x 1.0	1.35	5.85	25	5.0	3.02	3.0
30893	**27253**	M8 x1.25	0.68	2.03	25	5.0	3.43	4.0
30493	**26853**	M8 x1.25	1.35	6.75	25	5.0	3.43	4.0
30894	**27254**	M10 x 1.5	1.26	3.26	29	5.0	4.72	5.0
30494	**26854**	M10 x 1.5	2.48	6.53	29	5.0	4.72	5.0
30895	**27255**	M12 x 1.75	1.22	4.21	32	6.0	6.30	6.0
30495	**26855**	M12 x 1.75	2.97	7.83	32	6.0	6.30	6.0
30897	**27257**	M16 x 2.0	1.58	4.76	38	8.0	7.87	8.0
30497	**26857**	M16 x 2.0	4.73	11.48	38	8.0	7.87	8.0
30898	**27258**	M20 x 2.5	2.50	6.58	44	8.0	9.50	10.0
30498	**26858**	M20 x 2.5	3.05	16.95	44	8.0	9.50	10.0

Without Locking Element

SS Part Number	Steel Part Number
30880	**27270**
30480	**26870**
30881	**27271**
30481	**26871**
30882	**27272**
30482	**26872**
30883	**27273**
30483	**26873**
30884	**27274**
30484	**26874**
30885	**27275**
30485	**26875**
30887	**27277**
30487	**26877**
30888	**27278**
30488	**26878**

NOTE: For easy insertion of Spring Plungers with locking elements, the tapped hole should be countersunk at least .030-.045" (0.76-1.14mm) larger than the major diameter of the plunger.

Spring Plungers
Metric – Delrin Tip

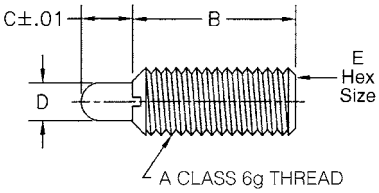

The hex drive in the rear of the spring plunger is for plunger insertion.

Specials available, see page 46 for Plunger Quote Request worksheet.

- Material: Body – Low Carbon Steel, Black Oxide
  Tip – Delrin
- Thread: 2A-UNC
- 3D Solid Models are available in multiple formats from www.jergensinc.com
- Conforms to TCMA dimensional standards

Unlike conventional spring plungers, the body of a Jergens Solid Drive Plunger is machined in one piece. The spring is assembled from the top so that there is no need for a set screw. Solid Drive Plungers do not have a set screw which can loosen or separate from the plunger body. The advantage is no lost springs, no need for “easy-out” tools. When adjusting Solid Drive, you can be sure the plunger body is turning and not a set screw.

Metric – Delrin Tip With Locking Element

Steel Part Number	Thread Size A	Initial Force (kg)	Final Force (kg)	B	C	D	Hex Size E
30850	M4 x 0.7	0.32	1.04	16	2.5	1.78	2.0
30450	M4 x 0.7	1.22	3.29	16	2.5	1.78	2.0
30851	M5 x 0.8	0.59	1.22	19	3.0	2.36	2.5
30451	M5 x 0.8	1.31	5.00	19	3.0	2.36	2.5
30852	M6 x 1.0	0.45	1.80	25	5.0	3.02	3.0
30452	M6 x 1.0	1.35	5.85	25	5.0	3.02	3.0
30853	M8 x1.25	0.68	2.03	25	5.0	3.43	4.0
30453	M8 x1.25	1.35	6.75	25	5.0	3.43	4.0
30854	M10 x 1.5	1.26	3.26	29	5.0	4.72	5.0
30454	M10 x 1.5	2.48	6.53	29	5.0	4.72	5.0
30855	M12 x 1.75	1.22	4.21	32	6.0	6.30	6.0
30455	M12 x 1.75	2.97	7.83	32	6.0	6.30	6.0
30857	M16 x 2.0	1.58	4.76	38	8.0	7.87	8.0
30457	M16 x 2.0	4.73	11.48	38	8.0	7.87	8.0
30858	M20 x 2.5	2.50	6.58	44	8.0	9.50	10.0
30458	M20 x 2.5	3.05	16.95	44	8.0	9.50	10.0

Without Locking Element

Steel Part Number
30870
30470
30871
30471
30872
30472
30873
30473
30874
30474
30875
30475
30877
30477
30878
30478

NOTE: For easy insertion of Spring Plungers with locking elements, the tapped hole should be countersunk at least .030-.045" (0.76-1.14mm) larger than the major diameter of the plunger.

Jergens
SPECIALTY FASTENERS GROUP

Shortie Spring Plungers
Inch

- Material: Body – Low Carbon Steel, Black Oxide
  Tip – Delrin or Steel
- Thread: 2A-UNC
- 3D Solid Models are available in multiple formats from www.jergensinc.com
- Conforms to TCMA dimensional standards
- Thread: 2A-UNC
- Available in metric sizes. See page 43.

Jergens Feature:

Jergens Shortie Spring Plungers are made to the same quality standards as the Solid Drive *Made with full standard spring plunger stroke in a short body. A screwdriver slot is substituted for the hex drive due to the smaller size.

Inch – Shortie Spring Plunger With Locking Element

Steel Tip	Delrin Tip	Thread Size A	Initial Force (lbs)	Final Force (lbs)	B	C	D
27101	**30701**	6-32	0.5	1.5	3/8	1/16	0.046
26701	**30301**	6-32	0.5	3.5	3/8	1/16	0.046
27102	**30702**	8-32	0.5	2.0	1/2	3/32	0.070
26702	**30302**	8-32	0.5	4.0	1/2	3/32	0.070
27103*	**30703***	10-32	0.3	3.0	9/16	1/8	0.093
26703*	**30303***	10-32	0.5	5.0	9/16	1/8	0.093
27104	**30704**	1/4-20	0.3	3.5	5/8	3/16	0.119
26704	**30304**	1/4-20	0.5	6.0	5/8	3/16	0.119
27105	**30705**	5/16-18	0.5	4.5	5/8	3/16	0.135
26705	**30305**	5/16-18	0.5	10.0	5/8	3/16	0.135
27106	**30706**	3/8-16	1.5	7.5	11/16	3/16	0.186
26706	**30306**	3/8-16	1.0	12.0	11/16	3/16	0.186
27107	**30707**	1/2-13	1.7	8.5	13/16	1/4	0.248
26707	**30307**	1/2-13	2.5	15.0	13/16	1/4	0.248
27108	**30708**	5/8-11	2.0	10.5	1 1/8	5/16	0.310
26708	**30308**	5/8-11	3.5	26.0	1 1/8	5/16	0.310

*Thread: UNF

Without Locking Element

Steel Tip	Delrin Tip
27001	**30601**
26601	**30201**
27002	**30602**
26602	**30202**
27003*	**30603***
26603*	**30203***
27004	**30604**
26604	**30204**
27005	**30605**
26605	**30205**
27006	**30606**
26606	**30206**
27007	**30607**
26607	**30207**
27008	**30608**
26608	**30208**

Shortie Spring Plungers Stainless Steel (Short Travel)

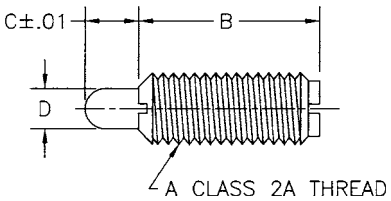

The slot in the rear of the Shortie Spring Plunger is for insertion.

- Material:
  Body, 303 Stainless
  Spring, 303 Stainless
  Nose, Stainless or Delrin
- Thread: 2A-UNC

Inch – Stainless Steel With Locking Element

Part Number		Thread Size	Force, lbs.				
Stainless Tip	Delrin Tip	A	Initial	Final	B	C	D
27601	**27621**	8-32	.5	1.5	7/16	.052	.070
27602	**27622**	8-32	1.5	4.75	7/16	.052	.070
27603*	**27623***	8-36	.5	1.5	7/16	.052	.070
27604*	**27624***	8-36	1.5	4.75	7/16	.052	.070
27605	**27625**	10-32	.75	2.5	15/32	.065	.093
27606	**27626**	10-32	1.75	6.25	15/32	.065	.093
27607	**27627**	1/4-20	1.0	3.5	17/32	.078	.119
27608	**27628**	1/4-20	3.0	10.5	17/32	.078	.119
27609	**27629**	5/16-18	1.0	4.0	9/16	.084	.135
27610	**27630**	5/16-18	3.75	15.5	9/16	.084	.135
27611	**27631**	3/8-16	1.5	5.0	5/8	.110	.186
27612	**27632**	3/8-16	4.5	18.5	5/8	.110	.186
27613	**27633**	1/2-13	1.75	5.5	3/4	.151	.248
27614	**27634**	1/2-13	5.0	28.0	3/4	.151	.248

*Thread: UNF

Specials available, see page 46 for Plunger Quote Request worksheet.

Shortie Spring Plungers
Metric

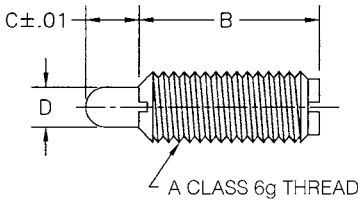

Specials available, see page 46 for Plunger Quote Request worksheet.

- Material: Body – Low Carbon Steel, Black Oxide
  Tip – Delrin or Steel
- Thread: Class 6g
- 3D Solid Models are available in multiple formats from www.jergensinc.com

Plunger Tips are color coded to indicate light or heavy force.

White = Light Force
Blue = Heavy Force

Jergens Feature:

Jergens Shortie Spring Plungers are made to the same quality standards as the Solid Drive *Made with full standard spring plunger stroke in a short body. A screwdriver slot is substituted for the hex drive due to the smaller size.

*Carbon Steel body only

Metric – Shortie Spring Plungers With Locking Elements

Steel Tip	Delrin Tip	Thread Size A	Initial Force (kg)	Final Force (kg)	B	C	D
27170	**30770**	M4 x 0.7	0.23	0.91	13.0	2.5	1.78
26770	**30370**	M4 x 0.7	0.23	1.81	13.0	2.5	1.78
27171	**30771**	M5 x 0.8	0.14	1.36	14.5	3.0	2.36
26771	**30371**	M5 x 0.8	0.23	2.27	14.5	3.0	2.36
27172	**30772**	M6 x 1.0	0.14	1.59	16.0	4.7	3.02
26772	**30372**	M6 x 1.0	0.23	2.72	16.0	4.0	3.02
27173	**30773**	M8 x 1.25	0.23	2.04	16.0	5.0	3.43
26773	**30373**	M8 x 1.25	0.23	4.54	16.0	5.0	3.43
27174	**30774**	M10 x 1.5	0.68	3.4	17.5	4.7	4.72
26774	**30374**	M10 x 1.5	0.46	5.44	17.5	5.0	4.72
27175	**30775**	M12 x 1.75	0.77	3.86	20.5	6.5	6.30
26775	**30375**	M12 x 1.75	1.13	6.80	20.5	6.5	6.30
27177	**30777**	M16 x 2.0	0.91	4.76	28.5	8.0	7.87
26777	**30377**	M16 x 2.0	1.59	11.79	28.5	8.0	7.87

Plunger Wrenches

IMPORTANT: It is not recommended that a screwdriver be used to insert ball or spring plungers from the ball or plunger end. The tip of the screwdriver will force the ball or tip of the plunger below the surface of the end of the plunger. This may compress the spring to a solid, causing possible damage to the spring plunger. It is recommended that a Jergens Plunger Wrench be used or that a slot be ground in the end of a screwdriver to clear the height of the ball or tip for each size ball or plunger used.

Part Number	Thread Size of Plungers	
	Inch	Metric
27501	6-32	—
27502	8-32	M4
27503	10-32	M5
27504	1/4-20	M6
27505	5/16-18	M8
27506	3/8-16	M10
27507	1/2-13	M12
27508	5/8-11	M16
27509	3/4-10	M20
27510	1-8	M25

Jergens
SPECIALTY FASTENERS GROUP

Ball Plungers
Inch

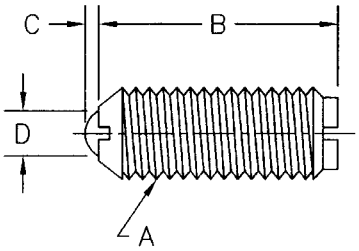

- Body Material: Low Carbon Steel, or 303 Stainless Steel
- Ball Material: Stainless, 440
- Spring Material: Stainless, 17-7 PH
- Finish: Black Oxide on Body
- Thread: 2A
- Dimensionally comforms to TCMA standards
- 3D Solid Models are available in multiple formats from www.jergensinc.com

Inch – Coarse Thread (UNC) With Locking Element

SS Part Number	Steel Part Number	Thread Size A	Initial Force (lbs)	Final Force (lbs)	B	C	D
11102	**10927**	5-40	0.25	0.75	1/4	0.020	0.062
11201	**10701**	10-24	0.50	1.50	33/64	0.025	0.093
11211	**10711**	10-24	1.50	3.00	33/64	0.025	0.093
11202	**10702**	10-24	2.00	5.00	33/64	0.025	0.093
11108	**10904**	1/4-20	2.00	4.00	17/32	0.035	0.125
11109	**10905**	1/4-20	3.00	7.00	17/32	0.035	0.125
11110	**10906**	1/4-20	4.00	12.00	17/32	0.035	0.125
11111	**10907**	5/16-18	2.00	4.50	37/64	0.040	0.156
11112	**10908**	5/16-18	4.00	9.00	37/64	0.040	0.156
11113	**10909**	5/16-18	6.00	17.00	37/64	0.040	0.156
11114	**10910**	3/8-16	2.50	5.00	5/8	0.048	0.187
11115	**10911**	3/8-16	5.00	10.00	5/8	0.048	0.187
11116	**10912**	3/8-16	6.00	21.00	5/8	0.048	0.187
11117	**10913**	1/2-13	3.00	6.00	3/4	0.072	0.281
11118	**10914**	1/2-13	6.00	12.00	3/4	0.072	0.281
11119	**10915**	1/2-13	6.00	30.00	3/4	0.072	0.281
11120	**10916**	5/8-11	4.50	9.00	1	0.096	0.375
11121	**10917**	5/8-11	9.00	18.00	1	0.096	0.375
11122	**10918**	5/8-11	7.00	50.00	1	0.096	0.375

Without Locking Element

SS Part Number	Steel Part Number
11002	**10827**
11221	**10721**
11231	**10731**
11222	**10722**
11008	**10804**
11009	**10805**
11010	**10806**
11011	**10807**
11012	**10808**
11013	**10809**
11014	**10810**
11015	**10811**
11016	**10812**
11017	**10813**
11018	**10814**
11019	**10815**
11020	**10816**
11021	**10817**
11022	**10818**

NOTE: For easy insertion of Ball Plungers with locking elements, the tapped hole should be countersunk at least .030-.045 (0.76-1.14mm) larger than the major diameter of the plunger.

Inch – Fine Thread (UNF) With Locking Element

SS Part Number	Steel Part Number	Thread Size A	Initial Force (lbs)	Final Force (lbs)	B	C	D
11101	**10926**	4-48	0.12	0.50	3/16	0.020	0.062
11103	**10928**	6-40	0.50	1.00	5/16	0.023	0.078
11104	**10929**	8-36	0.50	1.25	11/32	0.025	0.093
11105	**10901**	10-32	0.50	1.50	33/64	0.025	0.093
11106	**10902**	10-32	1.50	3.00	33/64	0.025	0.093
11107	**10903**	10-32	2.00	5.00	33/64	0.025	0.093
11203	**10703**	1/4-28	2.0	4.0	17/32	0.035	0.125
11212	**10712**	1/4-28	3.0	7.0	17/32	0.035	0.125
11204	**10704**	1/4-28	4.0	12.0	17/32	0.035	0.125
11205	**10705**	5/16-24	2.0	4.5	37/64	0.040	0.156
11213	**10713**	5/16-24	4.0	9.0	37/64	0.040	0.156
11206	**10706**	5/16-24	6.0	17.0	37/64	0.040	0.156
11207	**10707**	3/8-24	2.5	5.0	5/8	0.048	0.187
11214	**10714**	3/8-24	5.0	10.0	5/8	0.048	0.187
11208	**10708**	3/8-24	6.0	21.0	5/8	0.048	0.187
11209	**10709**	1/2-20	3.0	6.0	3/4	0.072	0.281
11215	**10715**	1/2-20	6.0	12.0	3/4	0.072	0.281
11210	**10710**	1/2-20	6.0	30.0	3/4	0.072	0.281

Without Locking Element

SS Part Number	Steel Part Number
11001	**10826**
11003	**10828**
11004	**10829**
11005	**10801**
11006	**10802**
11007	**10803**
11223	**10723**
11232	**10732**
11224	**10724**
11225	**10725**
11233	**10733**
11226	**10726**
11227	**10727**
11234	**10734**
11228	**10728**
11229	**10729**
11235	**10735**
11230	**10730**

Ball Plungers

Metric

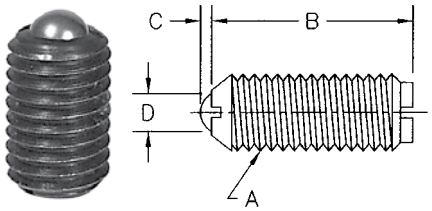

- Body Materials: Low Carbon Steel, Black Oxide or 303 Stainless Steel
- Ball: Stainless, 440
- Spring: Stainless, 17-7 PH
- Thread: Class 6g
- 3D Solid Models are available in multiple formats from www.jergensinc.com

NOTE: For easy insertion of Ball Plungers with locking elements, the tapped hole should be countersunk at least .030-.045 (0.76-1.14mm) larger than the major diameter of the plunger.

Metric – Steel & SS Tip With Locking Element

SS Part Number	Steel Part Number	Thread Size A	Initial Force (kg)	Final Force (kg)	B	C	D
11051	**10971**	M4 x 0.7	0.23	0.56	9.00	0.60	2.38
11052	**10972**	M5 x 0.8	0.23	0.68	13.00	0.60	2.38
11053	**10973**	M5 x 0.8	0.68	1.35	13.00	0.60	2.38
11054	**10974**	M5 x 0.8	0.90	2.25	13.00	0.60	2.38
11055	**10975**	M6 x 1.0	0.90	1.80	13.50	0.90	3.18
11056	**10976**	M6 x 1.0	1.35	3.15	13.50	0.90	3.18
11057	**10977**	M6 x 1.0	1.80	5.40	13.50	0.90	3.18
11058	**10978**	M8 x1.25	0.90	2.03	15.00	1.00	3.97
11059	**10979**	M8 x1.25	1.80	4.05	15.00	1.00	3.97
11060	**10980**	M8 x1.25	2.70	7.65	15.00	1.00	3.97
11061	**10981**	M10 x 1.5	1.13	2.25	16.00	1.20	4.76
11062	**10982**	M10 x 1.5	2.25	4.50	16.00	1.20	4.76
11063	**10983**	M10 x 1.5	2.70	9.45	16.00	1.20	4.76
11064	**10984**	M12 x 1.75	1.35	2.70	19.00	2.00	7.14
11065	**10985**	M12 x 1.75	2.70	5.40	19.00	2.00	7.14
11066	**10986**	M12 x 1.75	2.70	13.50	19.00	2.00	7.14
11067	**10987**	M16 x 2.0	2.00	4.00	25.40	2.40	9.50
11068	**10988**	M16 x 2.0	4.00	8.10	25.40	2.40	9.50
11069	**10989**	M16 x 2.0	3.10	22.70	25.40	2.40	9.50

Without Locking Element

SS Part Number	Steel Part Number
10951	**10871**
10952	**10872**
10953	**10873**
10954	**10874**
10955	**10875**
10956	**10876**
10957	**10877**
10958	**10878**
10959	**10879**
10960	**10880**
10961	**10881**
10962	**10882**
10963	**10883**
10964	**10884**
10965	**10885**
10966	**10886**
10967	**10887**
10968	**10888**
10969	**10889**

Press Fit Plungers

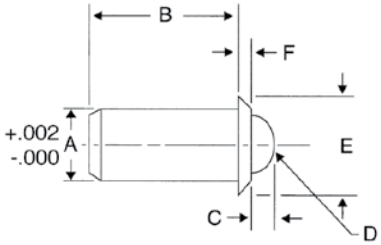

- Body Material: Low Carbon Steel
- Ball Material: Stainless, 400
- Spring Material: 17-7 PH
- Finish: Black Oxide on Body

Heavy Force

Part Number	Stainless Steel Part Number	Force (lbs) Initial	Force (lbs) Final	A	B	C	Ball Dia. D	E	F
10832	**11032**	2	5	.188	.405	.058	.156	.250	.035
10834	**11034**	3	7	.250	.481	.070	.187	.312	.044
10836	**11036**	5	14	.375	.785	.110	.312	.500	.078
10838	**11038**	8	18	.500	1.130	.161	.437	.688	.088

Light Force

Part Number	Stainless Steel Part Number	Force (lbs) Initial	Force (lbs) Final	A	B	C	Ball Dia. D	E	F
10831	**11031**	1	2.5	.188	.405	.058	.156	.250	.035
10833	**11033**	1.5	3.5	.250	.481	.070	.187	.312	.044
10835	**11035**	2.5	7	.375	.785	.110	.312	.500	.078
10837	**11037**	4	9	.500	1.130	.161	.437	.688	.088

Jergens
SPECIALTY FASTENERS GROUP

Special Spring and Ball Plungers

If you don't see the exact spring or ball plunger to meet your application requirements, photocopy the form below, indicate your requirements, and mail to your Jergens Distributor or e-mail Jergens Specialty Fasteners at fasteners@jergensinc.com.

PLUNGER QUOTATION REQUEST WORKSHEET

BALL

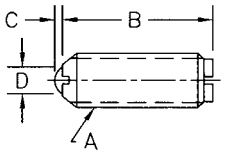

SHORTIE

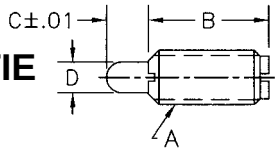

SPRING

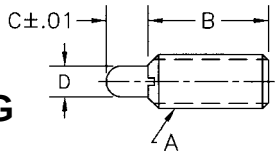

A dim. (See note below) _____ **C** dim. _____
B dim. _____ **D** dim. _____

Application (describe): _____

Type of Plunger: ☐ Solid Drive ☐ Spring ☐ "Shortie" ☐ Ball ☐ Other (see sketch)

Thread or O.D. _____ (Class 2A Threads unless Otherwise Specified)

Length of Plunger Travel: _____

Initial Force Required: _____ Final Force Required: _____

Plastic Locking Patch: ☐ Required ☐ Not Required Tip/Ball Material: _____

Tip/Ball Finish: _____ Body Material: _____

Body Finish: _____ Spring Material: _____

Temperature Range: _____

Type of Environment (describe—corrosives, chemicals, contaminants, etc.): _____

_____

Other Specifications: _____

_____

Quantity Needed: _____ Delivery By: _____

NAME: _____ TITLE: _____

COMPANY: _____ ADDRESS: _____

CITY: _____ STATE: _____ ZIP: _____

TELEPHONE: _____ FAX: _____

Retractable Plungers
Hand Retractable Locking Style

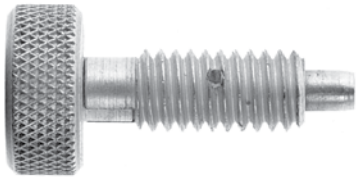

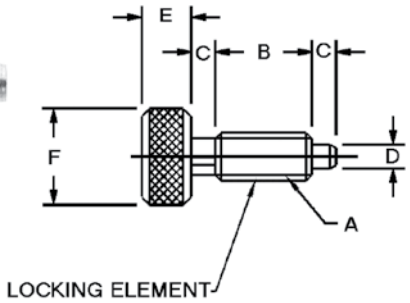

- Improved design allows plunger pin to be locked in fully retracted position
- Used in machining applications as positioners, loading pins or indexing devices
- Plunger pin has slight taper on end to assure easy alignment
- Zinc Plated Carbon Steel, 303 Stainless Steel
- Phenolic Nose Prevents Marring of Soft Material
- Supplied with locking element

Inch – Hand Retractable Locking Style Plungers

Steel Part Number	Steel Phenolic Nose Part Number	Stainless Steel Part Number	Stainless Steel Phenolic Nose Part Number	A	End Force (lbs)		B	C	+.001 -.002 D	E	F	Net Wt. (lbs) 10 Pcs.
					Start	Full						
27426	**27523**	**27826**	**27527**	1/4-20	0.5	2.5	1/2	1/8	.124	1/4	1/2	.3
27421	**27515**	**27821**	**27519**	1/4-20	1.0	5.0	1/2	1/8	.124	1/4	1/2	.3
27427	**27524**	**27827**	**27528**	5/16-18	0.75	3.0	5/8	3/16	.155	9/32	5/8	.5
27422	**27516**	**27822**	**27520**	5/16-18	1.5	6.0	5/8	3/16	.155	9/32	5/8	.5
27428	**27525**	**27828**	**27529**	3/8-16	0.75	4.0	3/4	7/32	.186	5/16	3/4	.7
27423	**27517**	**27823**	**27521**	3/8-16	1.5	8.0	3/4	7/32	.186	5/16	3/4	.7
27429	**27526**	**27829**	**27530**	1/2-13	1.25	5.0	7/8	1/4	.249	3/8	1"	1.3
27424	**27518**	**27824**	**27522**	1/2-13	2.5	10.0	7/8	1/4	.249	3/8	1"	1.3

Metric – Hand Retractable Locking Style Plungers

Steel Part Number	Class 6g ISO A	End Force (kg)		B	C	+.025 -.050 D	E	F	Net Wt. (kg) 10 Pcs.
		Start	Full						
27555	M6x1.0	0.225	1.135	12.50	3.17	3	6.3	12.7	.16
27551	M6x1.0	0.4	2.27	12.50	3.17	3	6.3	12.7	.16
27556	M8x1.25	0.34	1.36	16.00	4.75	4	7.0	15.8	.27
27552	M8x1.25	0.68	2.72	16.00	4.75	4	7.0	15.8	.27
27557	M10x1.5	0.34	1.815	19.00	5.50	5	7.9	19.0	.38
27553	M10x1.5	0.68	3.63	19.00	5.50	5	7.9	19.0	.38
27558	M12x1.75	0.565	2.27	22.00	6.35	6	9.4	25.4	.7
27554	M12x1.75	1.13	4.54	22.00	6.35	6	9.4	25.4	.7

Retractable Plungers
Pull Ring Style

- For use in application with limited space
- Slight taper on end of plunger for easy alignment

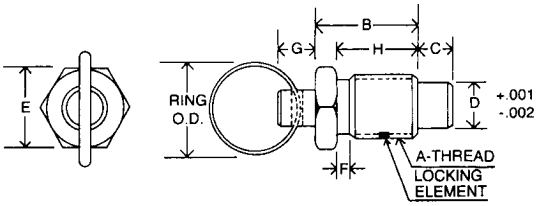

Pull Ring – Short Locking Plungers

Steel Part Number	Steel Phenolic Nose Part Number	Stainless Steel Part Number	Stainless Steel Phenolic Nose Part Number	A	Force, (lbs) Initial	Force, (lbs) Final	B	C	+.001 -.002 D	E	F	G	H	O.D	Net Wt. (lbs) 10 Pcs.
27441	**27804**	**27800**	**27808**	1/4-20	0.50	2.0	7/16	3/16	.156	1/4	1/32	5/32	9/32	3/4	.1
27442	**27805**	**27801**	**27809**	3/8-16	0.75	3.0	5/8	9/32	.250	3/8	1/8	3/16	7/16	3/4	.2
27443	**27806**	**27802**	**27810**	1/2-13	1.00	4.0	13/16	3/8	.312	1/2	5/32	1/4	9/16	1	.43
27444	**27807**	**27803**	**27811**	5/8-11	1.25	5.0	1	7/16	.375	5/8	5/32	5/16	11/16	1	.8

- For use in application with limited space
- Slight taper on end of plunger for easy alignment
- Turn ring to lock and extend plunger

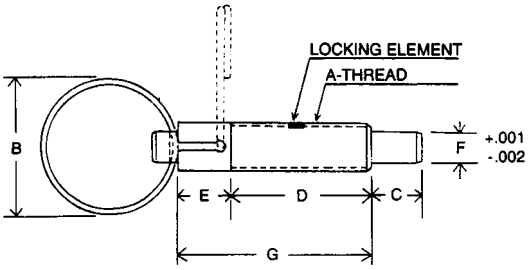

Pull Ring – Standard Length – Locking Plungers

Steel Part Number	Steel Phenolic Nose Part Number	Stainless Steel Part Number	Stainless Steel Phenolic Nose Part Number	A	Force, (lbs) Initial	Force, (lbs) Final	B	C	+.001 -.002 D	E	F	G	Net Wt. (lbs) 10 Pcs.
27446	**27815**	**27812**	**27818**	1/4-20	1.0	2.5	5/8	1/4	13/16	5/16	.156	1-1/8	.15
27447	**27816**	**27813**	**27819**	3/8-16	2.0	4.0	1	3/8	1-1/4	7/16	.233	1-11/16	.43
27448	**27817**	**27814**	**27820**	1/2-13	2.5	5.0	1-1/4	1/2	1-7/16	9/16	.312	2	.9

Retractable Plungers
L Handle Hand Retractable Locking Style

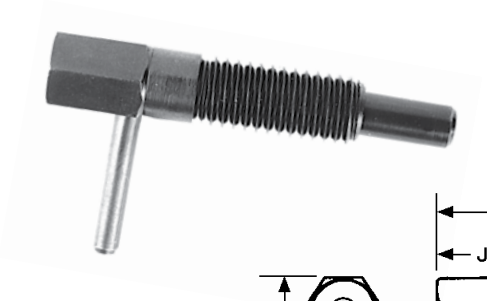

- Hand retractable for easy removal or insertion
- Turn handle to unlock and extend plunger
- Slight taper on end of plunger for easy alignment
- Locking element standard on all sizes

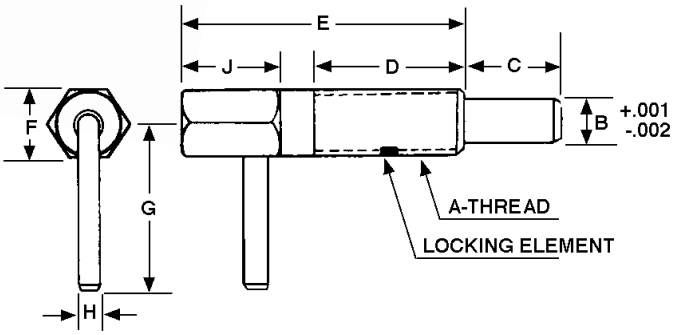

Locking Plungers – Long Reach – Standard Length

Steel Part Number	Steel Phenolic Nose Part Number	Stainless Steel Part Number	Stainless Steel Phenolic Nose Part Number	A	Force (lbs) Initial	Force (lbs) Final	+.001 -.002 B	C	D	E	F	G	H	J	Net Wt. (lbs) 10 Pcs.
27436	**27851**	**27836**	**27855**	1/4-20	.50	2.5	.156	3/8	5/8	1-1/4	1/4	5/8	3/32	1/2	.15
27437	**27852**	**27837**	**27856**	3/8-16	.75	3.75	.250	9/16	1-1/16	2	3/8	15/16	9/64	11/16	.53
27438	**27853**	**27838**	**27857**	1/2-13	1.0	5.0	.312	3/4	1-1/8	2-1/8	1/2	1-1/4	3/16	3/4	1.03
27439	**27854**	**27839**	**27858**	5/8-11	1.0	5.0	.375	1	1-3/4	3	5/8	1-5/16	3/16	1-1/16	2.23

Locking Plungers – Long Reach – Short Length

Steel Part Number	Steel Phenolic Nose Part Number	Stainless Steel Part Number	Stainless Steel Phenolic Nose Part Number	A	Force (lbs) Initial	Force (lbs) Final	+.001 -.002 B	C	D	E	F	G	H	J	Net Wt. (lbs) 10 Pcs.
27416	**27859**	**27867**	**27863**	1/4-20	.125	.50	.156	3/16	7/16	3/4	1/4	9/16	3/32	1/4	.1
27417	**27860**	**27868**	**27864**	3/8-16	.25	1.25	.250	5/16	5/8	1-1/8	3/8	3/4	9/64	3/8	.3
27418	**27861**	**27869**	**27865**	1/2-13	.50	2.0	.312	13/32	7/8	1-1/2	1/2	1	3/16	1/2	.7
27419	**27862**	**27870**	**27866**	5/8-11	.75	2.5	.375	1/2	1-1/8	1-7/8	5/8	1-3/16	3/16	5/8	1.35

Jergens
SPECIALTY FASTENERS GROUP

Spring Locating Pins

The Jergens Spring Locating Pins are designed for fixturing small parts in tight or compact space. Ideal for positioning and chucking flat parts and round parts and for profile clamping.

- Material: Body, aluminum
  Pin, steel, plastic, or stainless steel
- Finish: Steel Pin, case hardened, zinc coated
  Plastic Pin, delrin
  Spring, steel
- Economical
- Easy to handle and mount
- Ideal for positioning flat or round pieces
- Maintains constant pressure on parts
- Minimizes fixturing space

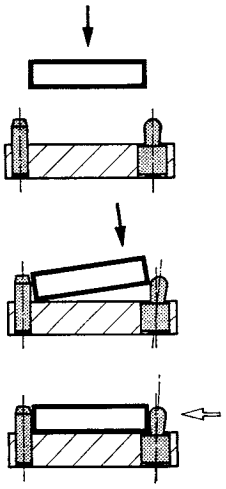

Locating Pin

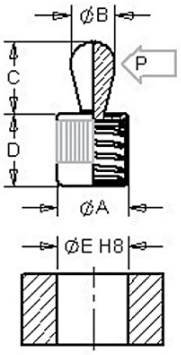

Spring Locating Pins with Seal

Part Number		Diameter				+.001 -.000	Force P		Installation
Steel Pin	Plastic Pin	A	B	C	D	E H8	(lbs)	X	Tool
36201	**36221**	.250	.118	.158	.276	.250	2.2	.035	**36295**
36202	**36222**	.250	.118	.158	.276	.250	4.5	.035	**36295**
36203	—	.250	.118	.158	.276	.250	9.0	.035	**36295**
36204	**36223**	.438	.197	.236	.472	.438	4.5	.063	**36296**
36205	**36224**	.438	.197	.236	.472	.438	11.2	.063	**36296**
36206	—	.438	.197	.236	.472	.438	21.5	.063	**36296**
36207	**36225**	.438	.236	.394	.472	.438	9.0	.071	**36297**
36208	**36226**	.438	.236	.394	.472	.438	17.0	.071	**36297**
36209	—	.438	.236	.394	.472	.438	34.0	.071	**36297**
36210	**36227**	.500	.315	.512	.551	.500	11.2	.102	**36298**
36211	**36228**	.500	.315	.512	.551	.500	22.5	.102	**36298**
36212	—	.500	.315	.512	.551	.500	45.0	.102	**36298**
36213	**36229**	.625	.394	.625	.709	.625	22.5	.126	**36299**
36214	**36230**	.625	.394	.625	.709	.625	45.0	.126	**36299**
36215	—	.625	.394	.625	.709	.625	67.5	.126	**36299**

Spring Locating Pins with *Elastomer base

Part Number							+.001 -.000	Force P		Installation
Steel Pin	Plastic Pin	Stainless Steel Pin	Diameter A	B	C	D	E H8	(lbs)	X	Tool
36231	**36251**	**36271**	.250	.118	.146	.295	.250	2.2	.039	**36295**
36232	**36252**	**36272**	.250	.118	.146	.295	.250	4.4	.039	**36295**
36233	**36253**	**36273**	.438	.197	.287	.354	.438	6.7	.063	**36296**
36234	**36254**	**36274**	.438	.197	.287	.354	.438	13.5	.063	**36296**
36235	**36255**	**36275**	.438	.197	.287	.354	.438	20.0	.063	**36296**
36236	**36256**	**36276**	.438	.236	.406	.354	.438	4.4	.075	**36297**
36237	**36257**	**36277**	.438	.236	.406	.354	.438	6.7	.075	**36297**
36238	**36258**	**36278**	.438	.236	.406	.354	.438	13.5	.075	**36297**
36239	—	**36279**	.438	.236	.406	.354	.438	20.0	.075	**36297**
36240	**36259**	**36280**	.500	.315	.520	.512	.500	11.1	.106	**36298**
36241	**36260**	**36281**	.500	.315	.520	.512	.500	22.2	.106	**36298**
36242	**36261**	**36282**	.625	.394	.654	.625	.625	17.5	.134	**36299**
36243	**36262**	**36283**	.625	.394	.654	.625	.625	35.0	.134	**36299**

*Uses elastomer plastic spring

Spring Locating Pins
Installation Data

To determine mounting hole locations, use the following formula:

$$L = \frac{S}{2} + W + X$$

L = Location
S = Diameter of Locating Pin
W = Width of Workpiece
X = See Chart

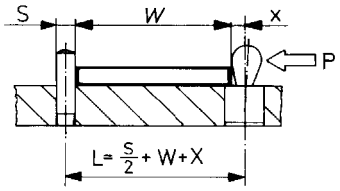

Application Ideas

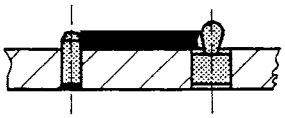

Position and hold flat parts.

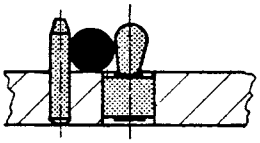

Position and hold round parts.

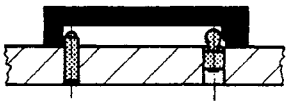

Position and hold from the inside to the outside.

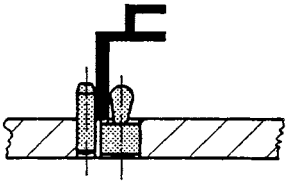

Position and hold various profiles of parts.

Eccentric Liners

Part Number	A	B	C	D
36291	.250	.500	.390	.079
36292	.438	.687	.469	.079
36293	.500	.750	.547	.079
36294	.625	1.000	.705	.118

Eccentric Liners allow for adjustment of spring pin tension due to part material variations, different tolerance requirements, or force adjustment.

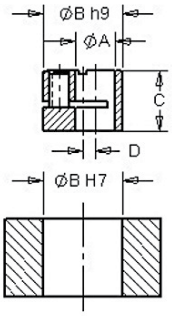

Installation Tools

Locating Spring Pin Installation Tools are designed to make installation easier.

Refer to the charts on page 50 to determine which tool to use.

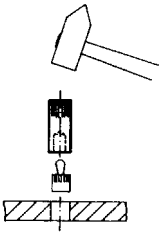

Jergens
SPECIALTY FASTENERS GROUP

Spring Stops
Button Type

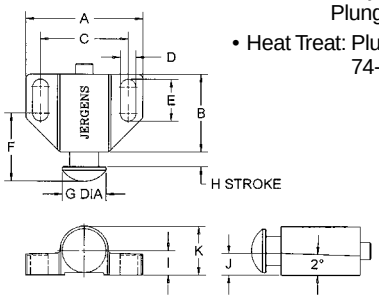

- Material: Body, Zinc Aluminum Alloy ZA-12 Plunger, Low Carbon Steel
- Heat Treat: Plunger Case Hardened 74-77 R30N

Jergens Features:

Set screw allows for adjustable plunger travel.

Angled mounting slot provides a more secure hold.

End Force (Half-Depressed)
36101, 36104, 36107 – 10 lbs./6.8 kg
36102, 36105, 36111 – 14 lbs./13.6 kg
36103, 36106, 36109 – 32 lbs./18.14 kg

Flat Button Type

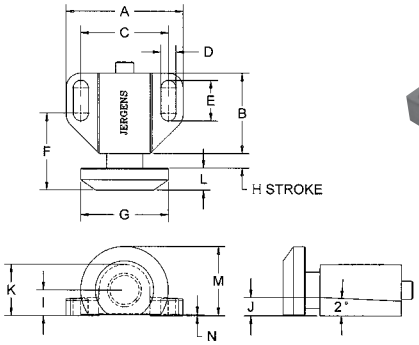

Tang Type

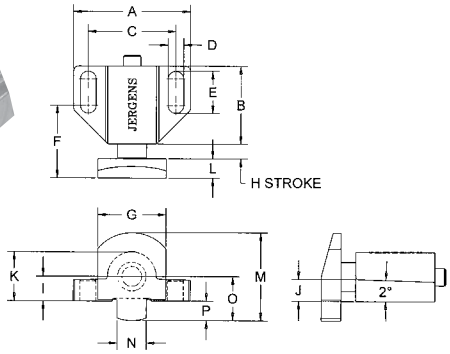

Jergens Spring Stops Dimension Tables

	Part. No.	A	B	C	D	E	F	G	Stroke H	I	J	K	L	M	N	O	P	Wt. (lbs) 10 Pcs.
Button	**36101**	15/16	11/16	21/32	0.14	0.35	21/32	3/8	1/8	7/32	7/32	13/32	—	—	—	—	—	0.2
Button	**36102**	1 1/2	1	1 1/8	0.2	0.54	29/32	9/16	3/16	5/16	9/32	5/8	—	—	—	—	—	0.9
Button	**36103**	2	1 3/8	1 1/2	0.257	0.69	1 5/16	13/16	1/4	7/16	5/16	7/8	—	—	—	—	—	1.85
Tang	**36104**	15/16	11/16	21/32	0.14	0.35	21/32	5/8	1/8	7/32	7/32	13/32	3/16	7/8	1/4	7/16	15/64	0.2
Tang	**36105**	1 1/2	1	1 1/8	0.2	0.54	29/32	7/8	3/16	5/16	9/32	5/8	1/4	1 1/8	3/8	9/16	17/64	0.9
Tang	**36106**	2	1 3/8	1 1/2	0.257	0.69	1 5/16	1 1/4	1/4	7/16	5/16	7/8	3/8	1 1/2	1/2	3/4	21/64	1.85
Flat	**36107**	15/16	11/16	21/32	0.14	0.35	21/32	3/4	1/8	7/32	7/32	13/32	3/16	7/8	1/64	—	—	0.2
Flat	**36111**	1 1/2	1	1 1/8	0.2	0.54	29/32	1 1/8	3/16	5/16	9/32	5/8	1/4	1 1/8	1/64	—	—	0.9
Flat	**36109**	2	1 3/8	1 1/2	0.257	0.69	1 5/16	1 1/2	1/4	7/16	5/16	7/8	3/8	1 1/2	1/64	—	—	1.85

Metric Dimensions (mm)

	Part. No.	A	B	C	D	E	F	G	Stroke H	I	J	K	L	M	N	O	P	Wt. (kg) 10 Pcs.
Button	**36101**	23.8	17.5	16.7	3.6	8.9	15.1	9.5	3.2	5.6	5.6	10.3	—	—	—	—	—	0.09
Button	**36102**	38.1	25.4	28.6	5.1	13.7	21.4	14.3	4.8	7.9	7.1	15.9	—	—	—	—	—	0.41
Button	**36103**	50.8	34.9	38.1	6.5	17.5	31	20.6	6.4	11.1	7.9	22.2	—	—	—	—	—	0.84
Tang	**36104**	23.8	17.5	16.7	3.6	8.9	15.1	15.9	3.2	5.6	5.6	10.3	4.8	22.2	6.4	11.1	6	0.09
Tang	**36105**	38.1	25.4	28.6	5.1	13.7	21.4	22.2	4.8	7.9	7.1	15.9	6.4	28.6	9.5	14.3	6.7	0.41
Tang	**36106**	50.8	34.9	38.1	6.5	17.5	31	31.8	6.4	11.1	7.9	22.2	9.5	38.1	12.7	19.1	8.3	0.84
Flat	**36107**	23.8	17.5	16.7	3.6	8.9	15.1	19.1	3.2	5.6	5.6	10.3	4.8	22.2	0.4	—	—	0.09
Flat	**36111**	38.1	25.4	28.6	5.1	13.7	21.4	22.2	4.8	7.9	7.1	15.9	6.4	28.6	0.4	—	—	0.41
Flat	**36109**	50.8	34.9	38.1	6.5	17.5	31	38.1	6.4	11.1	7.9	22.2	9.5	38.1	0.4	—	—	0.84

Threaded Inserts

Bolster Plate Bushings 57
Installation and Removal Instructions 54
Internal Locking Thread Repair Insert 60–61
Keylocking, Extra Heavy Duty Industrial Style 58
Keylocking, Heavy Duty Industrial Style 56
Keylocking, Metric/Inch 57
Keylocking, Solid Industrial Style 59
Keylocking, Thinwall Industrial Style 55
Miniature Metric Mil Spec Inserts 62–63
Thread Repair Kits 64–67

Jergens®
MANUFACTURING EFFICIENCY

Jergens
SPECIALTY FASTENERS GROUP

Installation Information

1. Drill to allow full tap depth shown in chart. Note: Tap drill is oversized; see chart below. Countersink as shown in chart.

2. Tap to depth shown in chart.

3. Install insert .010" to .030" below surface.

4. Drive keys down with proper installation tool.

Removal Information

Jergens Keylocking Inserts can be removed without damage to the parent material.

1. Drill the insert to the size and depth shown under removal data in the chart below.
2. Bend the keys down and break them off.
3. Remove the insert using an E-Z out or similar tool.

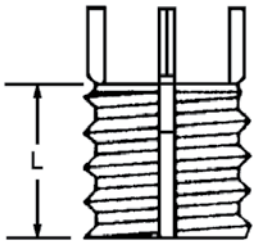

Installation Information

Preparation of External Threads Prior to Installation (For Keylocking Inserts Only)

Insert		Installation Data			Removal Data	
External Thread Class 2A	Length L	Tap Drill Size	C'sink Dia. +.010 -.000	Minimum Tap Depth	Drill Size	Drill Depth
5/16-18	.31	I	.323	.37	7/32	1/8
3/8-16	.31/.37	Q	.385	.37/.43	9/32	1/8
7/16-14	.31/.37/.43	X	.447	.37/.43/.50	11/32	3/16
1/2-13	.37/.43/.50	29/64	.510	.44/.50/.56	13/32	3/16
9/16-12	.43/.50/.56	33/64	.572	.50/.56/.62	15/32	3/16
5/8-11	.50/.62	37/64	.635	.56/.68	17/32	3/16
3/4-16	.62/.81	45/64	.760	.68/.94	21/32	3/16
7/8-14	.68/.81/.87	53/64	.885	.75/.94/1.0	25/32	3/16
1-12	.87	15/16	1.020	1.0	27/32	5/16
1 1/8-12	1.12	1 1/16	1.145	1.31	31/32	5/16
1 1/4-12	1.12/1.25	1 3/16	1.270	1.31/1.44	1 3/32	5/16
1 3/8-12	1.25/1.37	1 5/16	1.395	1.44/1.56	1 7/32	5/16
1 1/2-12	1.37/1.62	1 7/16	1.520	1.56/1.84	1 11/32	5/16
1 5/8-12	1.81	1 9/16	1.640	2.06	1 15/32	5/16
1 7/8-12	2.00	1 13/16	1.890	2.28	1 23/32	5/16

Keylocking Inserts
Thinwall Industrial Style

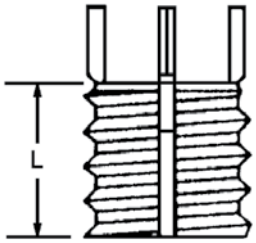

- Material: Carbon Steel Inserts - C1215 or equivalent
  Stainless Steel Insert - 303 Keys - 302
- Finish: Carbon Steel Inserts - Parkerized
  Stainless Steel Inserts - Passivated
- Tolerances: Inch ±.010 Metric ±.25mm
- Keys: Inserts with internal thread size of 5/16-18 or larger are furnished with four locking keys.
- RoHS compliant

Inch Inserts - Thinwall

Internal Thread Class 2B	Part Number		External Thread	Length L	Installation Tool Part Number
	Carbon Steel	Stainless Steel			
10-24	**25921**	**26321**	5/16-18	.31	**24721**
10-32	**26121**	**26521**	5/16-18	.31	**24721**
1/4-20	**25922**	**26322**	3/8-16	.37	**24722**
1/4-28	**26122**	**26522**	3/8-16	.37	**24722**
5/16-18	**25923**	**26323**	7/16-14	.43	**24723**
5/16-24	**26123**	**26523**	7/16-14	.43	**24723**
3/8-16	**25924**	**26324**	1/2-13	.50	**24724**
3/8-24	**26124**	**26524**	1/2-13	.50	**24724**
7/16-14	**25925**	**26325**	9/16-12	.56	**24725**
7/16-20	**26125**	**26525**	9/16-12	.56	**24725**
1/2-13	**25926**	**26326**	5/8-11	.62	**24726**
1/2-20	**26126**	**26526**	5/8-11	.62	**24726**

See chart on page 54 for installation information.

Metric Inserts - Thinwall

Part Number		Insert		Installation						Removal	
								Thread Tap		Drill	
Carbon Steel	Stainless Steel	Internal Thread Class 6H	External Thread Class 6g	Length L	Installation Tool Part No.	Tap Drill Size	C'sink Dia. +.25 -.00	Size Class 6h	Min. Depth	Size	Depth
25951	**26351**	M 5x0.8	M 8x1.25	8.0	**24751**	6.9	8.25	M 8x1.25	9.5	5.50	4.00
25952	**26352**	M 6x1.0	M 10x1.25	10.0	**24752**	8.8	10.25	M 10x1.25	11.5	7.50	4.75
25953	**26353**	M 8x1.25	M 12x1.25	12.0	**24753**	10.8	12.25	M 12x1.25	13.5	9.50	4.75
26153	**26553**	M 8x1.0	M 12x1.25	12.0	**24753**	10.8	12.25	M 12x1.25	13.5	9.50	4.75
25955	**26355**	M 10x1.5	M 14x1.5	14.0	**24755**	12.8	14.25	M 14x1.5	15.5	11.50	4.75
26155	**26555**	M 10x1.25	M 14x1.5	14.0	**24755**	12.8	14.25	M 14x1.5	15.5	11.50	4.75
25956	**26356**	M 12x1.75	M 16x1.5	16.0	**24756**	14.75	16.25	M 16x1.5	17.5	13.50	4.75
26156	**26556**	M 12x1.25	M 16x1.5	16.0	**24756**	14.75	16.25	M 16x1.5	17.5	13.50	4.75

Jergens
SPECIALTY FASTENERS GROUP

Keylocking Inserts
Heavy Duty Industrial Style

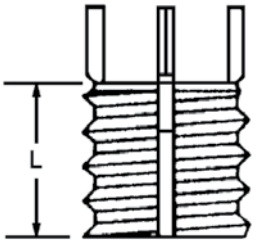

- Material: Carbon Steel Inserts - C1215 or equivalent
  Stainless Steel Insert - 303
  Keys - 302
- Finish: Carbon Steel Inserts - Parkerized
  Stainless Steel Inserts - Passivated
- Tolerances: Inch ±.010
  Metric ±.25mm
- Keys: Inserts with internal thread size of 5/16-18 or larger are furnished with four locking keys.
- RoHS compliant

Inch Inserts - Heavy Duty

Internal Thread Class 2B	Part Number		External Thread	Length L	Installation Tool Part Number
	Carbon Steel	Stainless Steel			
8-32	**25900**	**26300**	5/16-18	.31	**24719**
10-24	**25901**	**26301**	3/8-16	.31	**24701**
10-32	**26101**	**26501**	3/8-16	.31	**24701**
1/4-20	**25902**	**26302**	7/16-14	.37	**24702**
1/4-28	**26102**	**26502**	7/16-14	.37	**24702**
5/16-18	**25903**	**26303**	1/2-13	.43	**24703**
5/16-24	**26103**	**26503**	1/2-13	.43	**24703**
3/8-16	**25904**	**26304**	9/16-12	.50	**24704**
3/8-24	**26104**	**26504**	9/16-12	.50	**24704**
7/16-14	**25905**	**26305**	5/8-11	.62	**24705**
7/16-20	**26105**	**26505**	5/8-11	.62	**24705**
1/2-13	**25906**	**26306**	3/4-16	.62	**24706**
1/2-20	**26106**	**26506**	3/4-16	.62	**24706**
9/16-12	**25907**	**26307**	3/4-16	.81	**24707**
9/16-18	**26107**	**26507**	3/4-16	.81	**24707**
5/8-11	**25908**	**26308**	7/8-14	.87	**24708**
5/8-18	**26108**	**26508**	7/8-14	.87	**24708**
3/4-10	**25909**	**26309**	1 1/8-12	1.12	**24709**
3/4-16	**26109**	**26509**	1 1/8-12	1.12	**24709**
7/8-9	**25910**	**26310**	1 1/4-12	1.25	**24710**
7/8-14	**26110**	**26510**	1 1/4-12	1.25	**24710**
1-8	**25911**	**26311**	1 3/8-12	1.37	**24711**
1-12	**26111**	**26511**	1 3/8-12	1.37	**24711**
1-14	**26112**	—	1 3/8-12	1.37	**24711**
1 1/8-7	**25913**	—	1 1/2-12	1.62	**24713**
1 1/8-12	**26113**	—	1 1/2-12	1.62	**24713**
1 1/4-7	**25914**	—	1 5/8-12	1.81	**24714**
1 1/4-12	**26114**	—	1 5/8-12	1.81	**24714**
1 1/2-6	**25916**	—	1 7/8-12	2.00	**24716**
1 1/2-12	**26116**	—	1 7/8-12	2.00	**24716**

See chart on page 54 for installation information.

Metric Inserts - Heavy Duty

Part Number Carbon Steel	Part Number Stainless Steel	Insert			Installation					Removal	
		Internal Thread Class 6H	External Thread Class 6g	Length L	Installation Tool Part No.	Tap Drill Size	C'sink Diameter +.25 -.00	Thread Tap		Drill	
								Size Class 6h	Min. Depth	Size	Depth
25963	**26363**	M 4x0.7	M 8x1.25	8.0	**24763**	6.9	8.25	M 8x1.25	9.5	5.50	4.00
25964	**26364**	M 5x0.8	M 10x1.25	10.0	**24764**	8.8	10.25	M 10x1.25	12.5	7.50	4.75
25965	**26365**	M 6x1.0	M 12x1.25	12.0	**24765**	10.8	12.25	M 12x1.25	14.5	9.50	4.75
25966	**26366**	M 8x1.25	M 14x1.5	14.0	**24766**	12.8	14.25	M 14x1.5	16.5	11.50	4.75
26166	**26566**	M 8x1.0	M 14x1.5	14.0	**24766**	12.8	14.25	M 14x1.5	16.5	11.50	4.75
25967	**26367**	M 10x1.5	M 16x1.5	16.0	**24767**	14.75	16.25	M 16x1.5	18.5	13.50	4.75
26167	**26567**	M 10x1.25	M 16x1.5	16.0	**24767**	14.75	16.25	M 16x1.5	18.5	13.50	4.75
25969	**26369**	M 12x1.75	M 18x1.5	18.0	**24769**	16.75	18.25	M 18x1.5	20.5	15.50	4.75
26169	**26569**	M 12x1.25	M 18x1.5	18.0	**24769**	16.75	18.25	M 18x1.5	20.5	15.50	4.75
25970	**26370**	M 14x2.0	M 20x1.5	20.0	**24770**	18.75	20.25	M 20x1.5	22.5	17.50	4.75
26170	**26570**	M 14x1.5	M 20x1.5	20.0	**24770**	18.75	20.25	M 20x1.5	22.5	17.50	4.75
25971	**26371**	M 16x2.0	M 22x1.5	22.0	**24771**	20.5	22.25	M 22x1.5	24.5	17.75	6.35
26171	**26571**	M 16x1.5	M 22x1.5	22.0	**24771**	20.5	22.25	M 22x1.5	24.5	17.75	6.35
26172	**26572**	M 18x1.5	M 24x1.5	24.0	**24772**	22.5	24.25	M 24x1.5	26.5	19.75	6.35
25973	**26373**	M 20x2.5	M 30x2.0	30.0	**24773**	28.0	30.25	M 30x2.0	34.5	25.75	6.35
26173	**26573**	M 20x1.5	M 30x2.0	30.0	**24773**	28.0	30.25	M 30x2.0	34.5	25.75	6.35
26174	**26574**	M 22x1.5	M 32x2.0	32.0	**24774**	30.0	32.25	M 32x2.0	36.5	27.75	6.35
25975	**26375**	M 24x3.0	M 33x2.0	33.0	**24775**	31.0	33.25	M 33x2.0	37.5	28.75	6.35
26175	**26575**	M 24x2.0	M 33x2.0	33.0	**24775**	31.0	33.25	M 33x2.0	37.5	28.75	6.35

NOTE: Install insert .25mm to .76mm below surface and drive locking keys down. See C'sink Diameter column above.

Keylocking Inserts
Metric/Inch Inserts

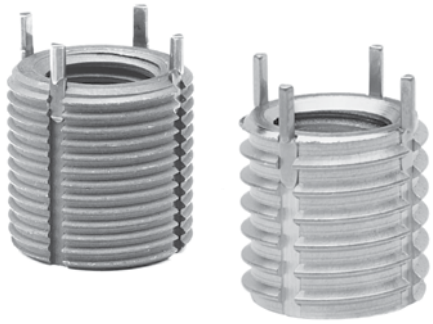

Create Metric Holes...
With Inch Taps!
This unique product allows you to create a metric thread utilizing inch drills and taps. The insert O.D. is inch sized, the I.D. is metric.

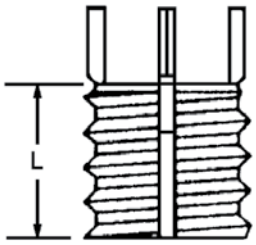

Metric Internal/Inch External - Heavy Duty Industrial Style

Part Number Carbon Steel	Insert			Installation					Removal	
							Thread Tap		Drill	
	Internal Thread Class 6H	External Thread Class 2A	Length L	Installation Tool Part Number	Tap Drill Size	C'sink Diameter +.010 -.000	Size Class 2b	Min. Depth	Size	Depth
26243	M 6x1.0	3/8 - 16	.31	**24843**	Q	.38	3/8 - 16	.37	9/32	1/8
26244	M 8x1.25	1/2 - 13	.43	**24844**	29/64	.51	1/2 - 13	.50	13/32	3/16
26245	M 10x1.5	5/8 - 11	.50	**24845**	37/64	.63	5/8 - 11	.56	17/32	3/16
26247	M 12x1.75	3/4 - 16	.62	**24847**	45/64	.76	3/4 - 16	.68	21/32	3/16
26248	M 14x2.0	7/8 - 14	.81	**24848**	53/64	.88	7/8 - 14	.94	25/32	5/16
26249	M 16x2.0	1" - 12	.87	**24849**	15/16	1.02	1" - 12	1.00	27/32	5/16

All dimensions are in inches except for internal thread, which is metric.

Bolster Plate Bushings

- Material: Stressproof
- Finish: Black Oxide
- Internal Thread: 2B-UNC
- External Thread: 2A-UNF

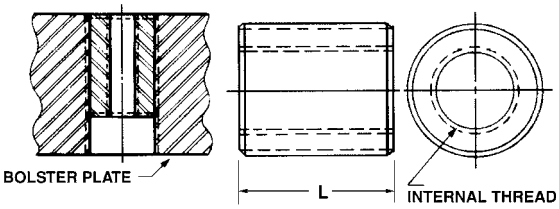

Repairs are made quickly, easily, and right on the machine. Re-tap bolster plate hole, insert the threaded bushing to match, use a locking type sealant to lock the bushing in place. The Bolster Plate Bushings can also be used as threaded bushings in cast iron machine bases where greater thread strength is necessary. Eliminates the problems of “pulled-out” cast iron threads, reduces the need for bulky threaded cast iron sections.

Part Number	Internal Thread	External Thread	L	Wt. (lbs) 10 Pcs.
11701	3/8-16	3/4-16	1 1/2	1.25
11702	1/2-13	1 -14	1 1/2	2.20
11703	5/8-11	1 -14	1 1/2	1.85
11704	3/4-10	1 1/4-12	1 1/2	3.00
11705	1 -8	1 1/2-12	2	5.15

Keylocking Inserts
Extra Heavy Duty Industrial Style

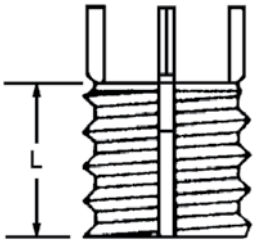

The increased wall thickness and greater external thread area of these extra heavy duty threaded inserts offer greater pull-out strength, stability, and longer life. These inserts should be used in materials with lower ultimate shear strength to obtain maximum pull-out strength and holding power.

- Greater Thread Area
- Increased Shear Engagement
- Offers Holding Power Comparable to Standard Heavy Duty Inserts in High Shear Strength Material
- Material: Carbon Steel Inserts - C1215 or equivalent
  Stainless Steel Insert - 303
  Keys - 302
- Finish: Carbon Steel Inserts - Parkerized
  Stainless Steel Inserts - Passivated
- Tolerances: ±.010
- Keys: Inserts with internal thread size of 5/16-18 or larger are furnished with four locking keys.
- RoHS compliant

Internal Thread Class 2B	Part Number		External Thread Class 2A	Length L	Installation Tool Part Number
	Carbon Steel	Stainless Steel			
6-32	**25931**	**26331**	5/16-18	.31	**24731**
8-32	**25932**	**26332**	3/8-16	.31	**24732**
10-24	**25933**	**26333**	7/16-14	.31	**24733**
10-32	**26133**	**26533**	7/16-14	.31	**24733**
1/4-20	**25934**	**26334**	1/2-13	.37	**24734**
1/4-28	**26134**	**26534**	1/2-13	.37	**24734**
5/16-18	**25935**	**26335**	9/16-12	.43	**24735**
5/16-24	**26135**	**26535**	9/16-12	.43	**24735**
3/8-16	**25936**	**26336**	5/8-11	.50	**24736**
3/8-24	**26136**	**26536**	5/8-11	.50	**24736**
7/16-14	**25937**	**26337**	3/4-16	.62	**24737**
7/16-20	**26137**	**26537**	3/4-16	.62	**24737**
1/2-13	**25938**	**26338**	7/8-14	.68	**24738**
1/2-20	**26138**	**26538**	7/8-14	.68	**24738**
9/16-12	**25939**	**26339**	7/8-14	.81	**24739**
9/16-18	**26139**	**26539**	7/8-14	.81	**24739**
5/8-11	**25940**	**26340**	1-12	.87	**24740**
5/8-18	**26140**	**26540**	1-12	.87	**24740**
3/4-10	**25941**	**26341**	1 1/4-12	1.12	**24741**
3/4-16	**26141**	**26541**	1 1/4-12	1.12	**24741**
7/8-9	**25942**	**26342**	1 3/8-12	1.25	**24742**
7/8-14	**26142**	**26542**	1 3/8-12	1.25	**24742**
1-8	**25943**	**26343**	1 1/2-12	1.37	**24743**
1-12	**26143**	**26543**	1 1/2-12	1.37	**24743**

See chart on page 54 for installation information.

Keylocking Inserts
Solid Industrial Style

- Material: Carbon Steel Inserts - C1215 or equivalent
  Stainless Steel Insert - 303
  Keys - 302
- Finish: Carbon Steel Inserts - Parkerized
  Stainless Steel Inserts - Passivated
- Tolerances: Inch ±.010
  Metric ±.25mm
- Keys: Inserts with internal thread size of M7 or larger are furnished with four locking keys.
- RoHS compliant

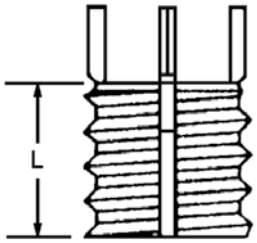

- Salvage expensive castings
- Relocate holes that have been drilled or tapped in the wrong location
- Fill holes that are too large
- No need to alter original bolt size

External Thread Class 2A	Part Number		Length L	Installation Tool Part Number
	Carbon Steel	Stainless Steel		
5/16-18	**26001**	**26401**	.31	**24801**
3/8-16	**26002**	**26402**	.31	**24802**
7/16-14	**26003**	**26403**	.37	**24803**
1/2-13	**26004**	**26404**	.43	**24804**
9/16-12	**26005**	**26405**	.50	**24805**
5/8-11	**26006**	**26406**	.62	**24806**
3/4-16	**26007**	**26407**	.68	**24807**
7/8-14	**26008**	**26408**	.87	**24808**
1-12	**26009**	**26409**	.87	**24809**
1 1/8-12	**26010**	**26410**	1.12	**24810**
1 1/4-12	**26011**	**26411**	1.25	**24811**
1 3/8-12	**26012**	**26412**	1.37	**24812**

See chart on page 54 for installation information.

Metric Inserts - Solid

Part Number Carbon Steel	Insert		Installation					Removal	
						Thread Tap		Drill	
	External Thread Class 6g	Length L	Installation Tool Part No.	Tap Drill Size	C'sink Dia. +.25 -.00	Size Class 6h	Min. Depth	Size	Depth
26021	M 8x1.25	8.0	**24821**	6.9	8.25	M 8x1.25	9.5	5.50	4.00
26022	M 10x1.25	10.0	**24822**	8.8	10.25	M 10x1.25	12.5	7.50	4.75
26023	M 12x1.25	12.0	**24823**	10.8	12.25	M 12x1.25	14.5	9.50	4.75
26024	M 14x1.5	14.0	**24824**	12.8	14.25	M 14x1.5	16.5	11.50	4.75
26025	M 16x1.5	16.0	**24825**	14.75	16.25	M 16x1.5	18.5	13.50	4.75
26026	M 18x1.5	18.0	**24826**	16.75	18.25	M 18x1.5	20.5	15.50	4.75
26027	M 20x1.5	20.0	**24827**	18.75	20.25	M 20x1.5	22.5	17.50	4.75
26028	M 22x1.5	22.0	**24828**	20.5	22.25	M 22x1.5	24.5	17.75	6.35
26029	M 24x1.5	24.0	**24829**	22.5	24.25	M 24x1.5	26.5	19.75	6.35
26030	M 30x2.0	30.0	**24830**	28.0	30.25	M 30x2.0	34.5	25.75	6.35
26031	M 32x2.0	32.0	**24831**	30.0	32.25	M 32x2.0	36.5	27.75	6.35
26032	M 33x2.0	33.0	**24832**	31.0	33.25	M 33x2.0	37.5	28.75	6.35

Jergens
SPECIALTY FASTENERS GROUP

Internal Locking Thread Repair Inserts

Material: Inserts - 303 stainless steel or equivalent
Keys - 302 stainless steel or equivalent
Finish: Passivated
Tolerances: ± .010 inch unless specified otherwise.
Dimensions: All dimensions below are in inches.
Keys: Inserts with an internal thread size of 5/16 and larger are furnished with 4 locking keys. Smaller sizes have 2 locking keys.
RoHS compliant

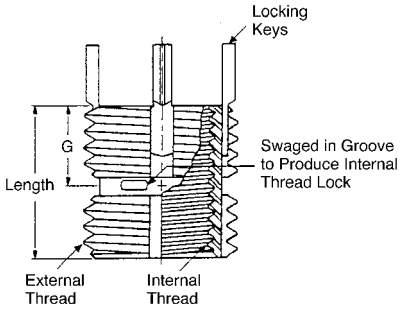

Thinwall - Locking

Insert					Installation					Removal	
								Thread Tap		Drill	
Part Number	Internal Thread Class 2B	External Thread (Mod.) Class 2A	Length	G (Ref.)	Installation Tool Part No.	Tap Drill Size	C'sink Dia +.010 -.000	Size Class 2B	Min. Depth	Size	Depth
24521	10 - 24	5/16 - 18	.31	.15	**24721**	"I"	.32	5/16 - 18	.37	7/32	1/8
24621	10 - 32										
24522	1/4 - 20	3/8 - 16	.37	.18	**24722**	"Q"	.38	3/8 - 16	.43	9/32	3/16
24622	1/4 - 28										
24523	5/16 - 18	7/16 - 14	.43	.21	**24723**	"X"	.44	7/16 - 14	.50	11/32	3/16
24623	5/16 - 24										
24524	3/8 - 16	1/2 - 13	.50	.25	**24724**	29/64	.51	1/2 - 13	.56	13/32	3/16
24624	3/8 - 24										
24525	7/16 - 14	9/16 - 12	.56	.28	**24725**	33/64	.57	9/16 - 12	.62	15/32	3/16
24625	7/16 - 20										
24526	1/2 - 13	5/8 - 11	.62	.31	**24726**	37/64	.63	5/8 - 11	.68	17/32	3/16
24626	1/2 - 20										

Heavy Duty - Locking

Insert					Installation					Removal	
								Thread Tap		Drill	
Part Number	Internal Thread Class 2B	External Thread (Mod.) Class 2A	Length	G (Ref.)	Installation Tool Part No.	Tap Drill Size	C'sink Dia +.010 -.000	Size Class 2B	Min. Depth	Size	Depth
24500	8 - 32	5/16 - 18	.31	.15	**24700**	"I"	.32	5/16 - 18	.37	7/32	1/8
24501	10 - 24	3/8 - 16	.31	.15	**24701**	"Q"	.38	3/8 - 16	.37	9/32	1/8
24601	10 - 32										
24502	1/4 - 20	7/16 - 14	.37	.18	**24702**	"X"	.44	7/16 - 14	.43	11/32	3/16
24602	1/4 - 28										
24503	5/16 - 18	1/2 - 13	.43	.21	**24703**	29/64	.51	1/2 - 13	.50	13/32	3/16
24603	5/16 - 24										
24504	3/8 - 16	9/16 - 12	.50	.25	**24704**	33/64	.57	9/16 - 12	.56	15/32	3/16
24604	3/8 - 24										
24505	7/16 - 14	5/8 - 11	.62	.31	**24705**	37/64	.63	5/8 - 11	.68	17/32	3/16
24605	7/16 - 20										
24506	1/2 - 13	3/4 - 16	.62	.31	**24706**	45/64	.76	3/4 - 16	.68	21/32	3/16
24606	1/2 - 20										
24507	9/16 - 12	3/4 - 16	.81	.40	**24707**	45/64	.76	3/4 - 16	.94	21/32	3/16
24607	9/16 - 18										
24508	5/8 - 11	7/8 - 14	.87	.43	**24708**	53/64	.88	7/8 -14	1.00	25/32	5/16
24608	5/8 - 18										
24509	3/4 - 10	1-1/8 - 12	1.12	.56	**24709**	1-1/16	1.14	1-1/8 - 12	1.31	31/32	5/16
24609	3/4 - 16										
24510	7/8 - 9	1-1/4 - 12	1.25	.62	**24710**	1-3/16	1.27	1-1/4 - 12	1.44	1-3/32	5/16
24610	7/8 - 14										
24511	1" - 8	1-3/8 - 12	1.37	.68	**24711**	1-5/16	1.39	1-3/8 - 12	1.56	1-7/32	5/16
24611	1" - 12										

Metric Internal Locking Thread Repair Inserts

Material: Inserts - 303 stainless steel or equivalent
Keys - 302 stainless steel or equivalent
Finish: Passivated
Tolerances: ±.25 mm unless specified otherwise.
Dimensions: All dimensions below are in millimeters
Keys: Inserts with an internal thread size of M7 and larger are furnished with 4 locking keys. Smaller sizes have 2 locking keys.
RoHS compliant

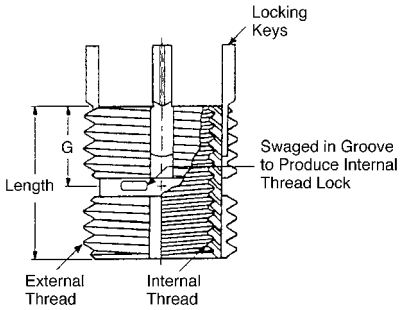

Thinwall - Metric - Locking

Insert					Installation					Removal	
								Thread Tap		Drill	
Part Number	Internal Thread Class 6H	External Thread Class 6g	Length	G (Ref.)	Installation Tool Part No.	Tap Drill Size	C'sink Dia. +.25 -.00	Size Class 6h	Min. Depth	Size	Depth
24551	M 5x0.8	M 8x1.25	8.0	4.0	**24751**	6.9	8.25	M 8x1.25	9.5	5.50	4.00
24552	M 6x1.0	M 10x1.25	10.0	5.0	**24752**	8.8	10.25	M 10x1.25	11.5	7.50	4.75
24553	M 8x1.25	M 12x1.25	12.0	6.0	**24753**	10.8	12.25	M 12x1.25	13.5	9.50	4.75
24653	M 8x1.0										
24555	M 10x1.5	M 14x1.5	14.0	7.0	**24755**	12.8	14.25	M 14x1.5	15.5	11.50	4.75
24655	M 10x1.25										
24556	M 12x1.75	M 16x1.5	16.0	8.0	**24756**	14.75	16.25	M 16x1.5	17.5	13.50	4.75
24656	M 12x1.25										

Heavy Duty - Metric - Locking

Insert					Installation					Removal	
								Thread Tap		Drill	
Part Number	Internal Thread Class 6H	External Thread Class 6g	Length	G (Ref.)	Installation Tool Part No.	Tap Drill Size	C'sink Dia. +.25 -.00	Size Class 6h	Min. Depth	Size	Depth
24563	M 4X0.7	M 8x1.25	8.0	4.0	**24763**	6.9	8.25	M 8x1.25	9.5	5.50	4.00
24564	M 5x0.8	M 10x1.25	10.0	5.0	**24764**	8.8	10.25	M 10x1.25	12.5	7.50	4.75
24565	M 6x1.0	M 12x1.25	12.0	6.0	**24765**	10.8	12.25	M 12x1.25	14.5	9.50	4.75
24566	M 8x1.25	M 14x1.5	14.0	7.0	**24766**	12.8	14.25	M 14x1.5	16.5	11.50	4.75
24666	M 8x1.0										
24567	M 10x1.5	M 16x1.5	16.0	8.0	**24767**	14.75	16.25	M 16x1.5	18.5	13.50	4.75
24667	M 10x1.25										
24569	M 12x1.75	M 18x1.5	18.0	9.0	**24769**	16.75	18.25	M 18x1.5	20.5	15.50	4.75
24669	M 12x1.25										
24570	M 14x2.0	M 20x1.5	20.0	10.0	**24770**	18.75	20.25	M 20x1.5	22.5	17.50	4.75
24670	M 14x1.5										
24571	M 16x2.0	M 22x1.5	22.0	11.0	**24771**	20.5	22.25	M 22x1.5	24.5	17.75	6.35
24671	M 16x1.5										
24672	M 18x1.5	M 24X1.5	24.0	12.0	**24772**	22.5	24.25	M 24x1.5	26.5	19.75	6.35
24573	M 20x2.5	M 30x2.0	30.0	15.0	**24773**	28.0	30.25	M 30x2.0	34.5	25.75	6.35
24673	M 20x1.5										
24674	M 22x1.5	M 32x2.0	32.0	16.0	**24774**	30.0	32.25	M 32x2.0	36.5	27.75	6.35
24575	M 24x3.0	M 33x2.0	33.0	16.5	**24775**	31.0	33.25	M 33x2.0	37.5	28.75	6.35
24675	M 24x2.0										

Jergens
SPECIALTY FASTENERS GROUP

Miniature - Metric
303 CRES Keylocking Threaded Inserts

Material: Inserts - 303 CRES
Keys - 302 CRES
Finish: Passivated
Tolerances: ±.25 mm unless specified otherwise
Internal Threads: Per Fed Std H28/21, MJ Form
Dimensions: All dimensions below are in millimeters
Keys: Miniature Inserts are furnished with 2 locking keys
Material Identification Mark: None
Lubrication: Dry Film Lube on Self-Locking Inserts only
RoHS compliant

Non-Locking

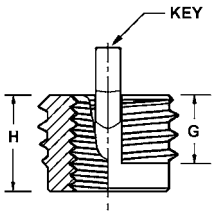

Self-Locking

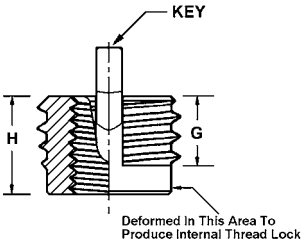

Part Number*			Insert			Installation					Removal	
									Thread Tap		Drill	
Non-Locking	Self-Locking	Internal Thread Class 4H6H	External Thread Class 4h	Thread Length G	Length H	Install Tool Part No*	Tap Drill Size +.080/ -.025	C'Sink Dia. +.25/-.00	Size Class 6H	Min. Depth	Size	Depth
26382	**27382**	M 2x0.4	M 4x0.7	2.20	3.00	**22682**	3.4	4.1	M 4x0.7	4.0	2.8	2.00
26383	**27383**	M 2.5x0.45	M 4.5x0.75	2.70	3.81	**22683**	3.9	4.6	M 4.5x0.75	5.0	3.0	2.00
26384	**27384**	M 3x0.5	M 5x0.8	3.10	4.25	**22684**	4.4	5.1	M 5x0.8	5.5	3.5	2.25
26386	**27386**	M 4x0.7	M 6x0.75	4.11	5.25	**22686**	5.5	6.1	M 6x0.75	6.5	4.6	2.50

Miniature - Inch
303 CRES Keylocking Threaded Inserts

Material: Inserts - 303 CRES
Keys - 302 CRES
Finish: Passivated
Tolerances: ±.010 inch unless specified otherwise
Internal Threads: Per SAE AS8879
Dimensions: All dimensions below are in inches
Keys: Miniature Inserts are furnished with 2 locking keys
Material Identification Mark: None
Lubrication: Dry Film Lube on Self-Locking Inserts only
RoHS compliant

Non-Locking

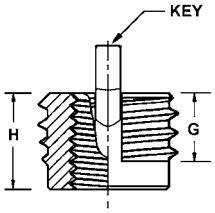

Self-Locking

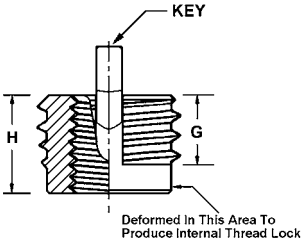

Part Number*			Insert			Installation					Removal	
									Thread Tap		Drill	
Non-Locking	Self-Locking	Internal Thread Class 3B	External Thread Class 2A	G Thread Length	H Length	Install Tool Part No*	Tap Drill Size +.003/ -.001	C'Sink Dia. +.010/-.000	Size Class 2B	Min. Depth	Size	Depth
26283	**27283**	2 - 56	8 - 32	.090	.120	**22552**	.134	.166	8 - 32	.140	#33	1/16
26284	**27284**	4 - 40	10 - 32	.125	.170	**22554**	.161	.194	10 - 32	.160	#29	3/32
26285	**27285**	6 - 32	12 - 28	.125	.170	**22556**	.187	.220	12 - 28	.160	#21	3/32
26286	**27286**	8 - 32	1/4 - 28†	.175	.220	**22558**	.228	.255	1/4 - 28	.210	#8	1/8

† Modified Minor Diameter

High Strength Materials Available: These miniature inserts are also manufactured in high strength stainless steel (A-286 with heat treatment) and in alloy steel (4140 with heat treatment).

MS/NAS Style Insert

Jergens now offers Mil-Spec Keylocking Threaded Inserts

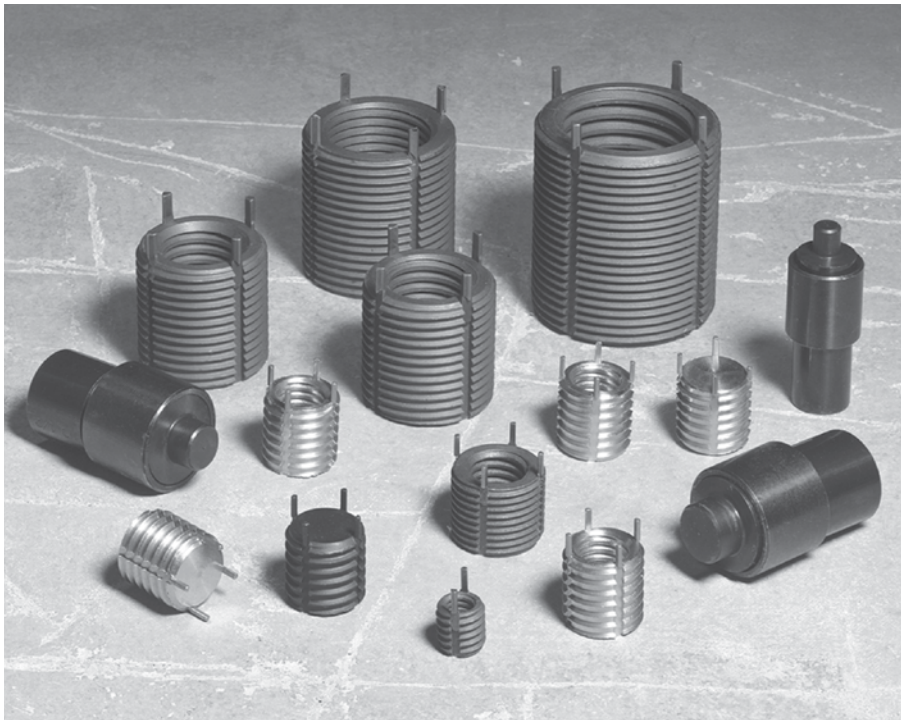

NEW

Thread Inserts

- Inch and metric sizes available
- Standard Material: 303 CRES
  C1215
- Special Material: A286 CRES
  4140 Alloy Steel

Insert Style
Miniature & Lightweight MS 51830/NAS 1394
Heavy Duty MS 51831/NAS 1395
Extra Heavy Duty MS 51832

Please contact Jergens for cross reference and ordering information.
1-866-KWIK-LOK (594-5565)

Master Thread Repair Kits
Small Assortments

The Jergens Master Thread Repair Kits include several different kinds of inserts, installation tools and installation and removal instructions.

The Kits are available with inch or metric, carbon steel inserts or with stainless steel inserts.

Coarse Series, Heavy Duty Kits

Internal Thread Class 2B	External Thread (Mod) Class 2A	Length	Quantity of Inserts Per Kit
10 - 24	3/8 - 16	.31	5
1/4 - 20	7/16 - 14	.37	10
5/16 - 18	1/2 - 13	.43	10
3/8 - 16	9/16 - 12	.50	10
1/2 - 13	3/4 - 16	.62	10
5/8 - 11	7/8 - 14	.87	10
3/4 - 10	1-1/8 - 12	1.12	5

Total Inserts Per Kit 60 pcs.

Carbon Steel Kit	Stainless Steel Kit
25949	26349

Fine Series, Heavy Duty Kits

Internal Thread Class 2B	External Thread Class 2A	Length	Quantity of Inserts Per Kit
10 - 32	3/8 - 16	.31	5
1/4 - 28	7/16 - 14	.37	10
5/16 - 24	1/2 - 13	.43	10
3/8 - 24	9/16 - 12	.50	10
1/2 - 20	3/4 - 16	.62	10
5/8 - 18	7/8 - 14	.87	10
3/4 - 16	1-1/8 - 12	1.12	5

Total Inserts Per Kit 60 pcs.

Carbon Steel Kit	Stainless Steel Kit
26149	26549

Metric, Thinwall Kits

Internal Thread Class 2B	External Thread Class 2A	Length (mm)	Quantity of Inserts Per Kit
M 5x0.8	M 8x1.25	8.0	8
M 6x1.0	M 10x1.25	10.0	8
M 8x1.25	M 12x1.25	12.0	6
M 8x1.0	M 12x1.25	12.0	6
M 10x1.5	M 14x1.5	14.0	4
M 10x1.25	M 14x1.5	14.0	4
M 12x1.75	M 16x1.5	16.0	3
M 12x1.25	M 16x1.5	16.0	3

Total Inserts Per Kit 42 pcs.

Metric Carbon Steel Kit	Stainless Steel Kit
25999	25998

Master Thread Repair Kits
Large Assortments

Coarse Series, Heavy Duty Kits

Internal Thread Class 2B	External Thread (Mod) Class 2A	Length	Quantity of Inserts Per Kit
1/4 - 20	7/16 - 14	.37	20
5/16 - 18	1/2 - 13	.43	15
3/8 - 16	9/16 - 12	.50	10
7/16 - 14	5/8 - 11	.62	10
1/2 - 13	3/4 - 16	.62	6
9/16 - 12	3/4 - 16	.81	5
5/8 - 11	7/8 - 14	.87	3
3/4 - 10	1-1/8 - 12	1.12	3
7/8 - 9	1-1/4 - 12	1.25	3
1" - 8	1-3/8 - 12	1.37	2

Total Inserts Per Kit 77 pcs.

Carbon Steel Kit	Stainless Steel Kit
25945	26345

Fine Series, Heavy Duty Kits

Internal Thread Class 2B	External Thread (Mod) Class 2A	Length	Quantity of Inserts Per Kit
1/4 - 28	7/16 - 14	.37	10
5/16 - 24	1/2 - 13	.43	10
3/8 - 24	9/16 - 12	.50	10
7/16 - 20	5/8 - 11	.62	10
1/2 - 20	3/4 - 16	.62	6
9/16 - 18	3/4 - 16	.81	5
5/8 - 18	7/8 - 14	.87	3
3/4 - 16	1-1/8 - 12	1.12	3
7/8 - 14	1-1/4 - 12	1.25	3
1" - 12	1-3/8 - 12	1.37	2

Total Inserts Per Kit 77 pcs.

Carbon Steel Kit	Stainless Steel Kit
26145	26545

Metric, Thinwall Kits

Internal Thread Class 6H	External Thread Class 6g	Length (mm)	Quantity of Inserts Per Kit
M 6x1.0	M 10x1.25	10.0	20
M 8x1.25	M 12x1.25	12.0	15
M 8x1.0	M 12x1.25	12.0	15
M 10x1.5	M 14x1.5	14.0	10
M 10x1.25	M 14x1.5	14.0	10
M 12x1.75	M 16x1.5	16.0	6
M 12x1.25	M 16x1.5	16.0	6

Total Inserts Per Kit 82 pcs.

Metric Carbon Steel Kit	Stainless Steel Kit
25997	25996

Coarse Series, Thinwall Kits

Internal Thread Class 2B	External Thread (Mod) Class 2A	Length	Quantity of Inserts Per Kit
10 - 24	5/16 - 18	.31	20
1/4 - 20	3/8 - 16	.37	20
5/16 - 18	7/16 - 14	.43	15
3/8 - 16	1/2 - 13	.50	10
7/16 - 14	9/16 - 12	.56	10
1/2 - 13	5/8 - 11	.62	6

Total Inserts Per Kit 81 pcs.

Carbon Steel Kit	Stainless Steel Kit
25948	26348

Fine Series, Thinwall Kits

Internal Thread Class 2B	External Thread (Mod) Class 2A	Length	Quantity of Inserts Per Kit
10 - 32	5/16 - 18	.31	20
1/4 - 28	3/8 - 16	.37	20
5/16 - 24	7/16 - 14	.43	15
3/8 - 24	1/2 - 13	.50	10
7/16 - 20	9/16 - 12	.56	10
1/2 - 20	5/8 - 11	.62	6

Total Inserts Per Kit 81 pcs.

Carbon Steel Kit	Stainless Steel Kit
25947	26548

Jergens
SPECIALTY FASTENERS GROUP

Inch Thread Repair Insert Kits

The Jergens Keylocking Inserts provide strong and durable threads in most types of material. They are easily installed using standard drills and taps.

The Jergens Thread Repair Insert Kits include inserts, an installation tool, and installation and removal instructions.

The Kits are available with either inch, metric, or metric internal/inch external carbon steel inserts.

Each Kit is comprised of one size of insert in various quantities. For Thread Repair Kits that include several different sizes, see pages 64 – 65.

Inch Thread Kits - Heavy Duty

Carbon Steel Part Number	Stainless Steel Part Number	Internal Thread	External Thread	Inserts Per Kit	Insert Part Number	Stainless Steel Insert Part Number	Tool Part Number
75900	76300	8-32	5/16-18	9	25900	26300	24700
75901	76301	10-24	3/8-16	9	25901	26301	24701
76101	76501	10-32	3/8-16	9	26101	26501	24701
75902	76302	1/4-20	7/16-14	8	25902	26302	24702
76102	76502	1/4-28	7/16-14	8	26102	26502	24702
75903	76303	5/16-18	1/2-13	7	25903	26303	24703
76103	76503	5/16-24	1/2-13	7	26103	26503	24703
75904	76304	3/8-16	9/16-12	6	25904	26304	24704
76104	76504	3/8-24	9/16-12	6	26104	26504	24704
75905	76305	7/16-14	5/8-11	6	25905	26305	24705
76105	76505	7/16-20	5/8-11	6	26105	26505	24705
75906	76306	1/2-13	3/4-16	4	25906	26306	24706
76106	76506	1/2-20	3/4-16	4	26106	26506	24706
75907	76307	9/16-12	3/4-16	3	25907	26307	24707
76107	76507	9/16-18	3/4-16	3	26107	26507	24707
75908	76308	5/8-11	7/8-14	3	25908	26308	24708
76108	76508	5/8-18	7/8-14	3	26108	26508	24708
75909	76309	3/4-10	1 1/8-12	3	25909	26309	24709
76109	76509	3/4-16	1 1/8-12	3	26109	26509	24709
75910	76310	7/8-9	1 1/4-12	3	25910	26310	24710
76110	76510	7/8 -14	1 1/4-12	3	26110	26510	24710
75911	76311	1 - 8	1 3/8-12	2	25911	26311	24711
76111	76511	1 -12	1 3/8-12	2	26111	26511	24711
75913	—	1 1/8-7	1 1/2-12	2	25913	—	24713
76113	—	1 1/8-12	1 1/2-12	2	26113	—	24713
75914	—	1 1/4-7	1 5/8-12	2	25914	—	24714
76114	—	1 1/4-12	1 5/8-12	2	26114	—	24714
75916	—	1 1/2-6	1 7/8-12	2	25916	—	24716
76116	—	1 1/2-12	1 7/8-12	2	26116	—	24716

Inch Thread Kits - Thin Wall

Carbon Steel Part Number	Stainless Steel Part Number	Internal Thread	External Thread	Inserts Per Kit	Carbon Steel Insert Part Number	Stainless Steel Insert Part Number	Installation Tool Part Number
75921	76421	10-24	5/16-18	9	25921	26321	24721
76121	76521	10-32	5/16-18	9	26121	26521	24721
75922	76422	1/4-20	3/8-16	8	25922	26322	24722
76122	76522	1/4-28	3/8-16	8	26122	26522	24722
75923	76423	5/16-18	7/16-14	7	25923	26323	24723
76123	76523	5/16-24	7/16-14	7	26123	26523	24723
75924	76424	3/8-16	1/2-13	6	25924	26325	24724
76124	76524	3/8-24	1/2-13	6	26124	26524	24724
75925	76425	7/16-14	9/16-12	6	25925	26325	24725
76125	76525	7/16-20	9/16-12	6	26125	26525	24725
75926	76426	1/2-13	5/8-11	4	25926	26326	24726
76126	76526	1/2-20	5/8-11	4	26126	26526	24726

Metric Thread Repair Insert Kits

The Jergens Keylocking Inserts provide strong and durable threads in most types of material. They are easily installed using standard drills and taps.

The Jergens Thread Repair Insert Kits include inserts, an installation tool, and installation and removal instructions.

The Kits are available with either inch, metric, or metric internal/inch external carbon steel inserts.

Each Kit is comprised of one size of insert in various quantities. For Thread Repair Kits that include several different sizes, see pages 64 – 65.

Metric Thread Kits - Heavy Duty

Carbon Steel Part Number	Stainless Steel Part Number	Internal Thread	External Thread	Inserts Per Kit	Insert Part Number	Stainless Steel Insert Part Number	Tool Part Number
75963	76463	M4x0.7	M8x1.25	9	25963	26363	24763
75964	76464	M5x0.8	M10x1.25	8	25964	26364	24764
75965	76465	M6x1.0	M12x1.25	8	25965	26365	24765
75966	76466	M8x1.25	M14x1.5	6	25966	26366	24766
76166	76566	M8x1.0	M14x1.5	6	26166	26566	24766
75967	76467	M10x1.5	M16x1.5	4	25967	26367	24767
76167	76567	M10x1.25	M16x1.5	4	26167	26567	24767
75969	76469	M12x1.75	M18x1.5	3	25969	26369	24769
76169	76569	M12x1.25	M18x1.5	3	26169	26569	24769
75970	76470	M14x2.0	M20x1.5	4	25970	26370	24770
76170	76570	M14x1.5	M20x1.5	4	26170	26570	24770
75971	76471	M16x2.0	M22x1.5	3	25971	26371	24771
76171	76571	M16x1.5	M22x1.5	3	26171	26571	24771
76172	76572	M18x1.5	M24x1.5	2	26172	26572	24772
75973	76473	M20x2.5	M30x2.0	3	25973	26373	24773
76173	76573	M20x1.5	M30x2.0	3	26173	26573	24773
76174	76574	M22x1.5	M32x2.0	3	26174	26574	24774
75975	76475	M24x3.0	M33x2.0	3	25975	26375	24775
76175	76575	M24x2.0	M33x2.0	2	26175	26575	24775

Metric Thread - Thin Wall

Carbon Steel Part Number	Stainless Steel Part Number	Internal Thread	External Thread	Inserts Per Kit	Insert Part Number	Stainless Steel Insert Part Number	Tool Part Number
75951	76451	M5x0.8	M8x1.25	8	25951	26351	24751
75952	76452	M6x1.0	M10x1.25	8	25952	26352	24752
75953	76453	M8x1.25	M12x1.25	6	25953	26353	24753
76153	76553	M8x1.0	M12x1.25	6	26153	26553	24753
75955	76455	M10x1.5	M14x1.5	4	25955	26355	24755
76155	76555	M10x1.25	M14x1.5	4	26155	26555	24755
75956	76456	M12x1.75	M16x1.5	3	25956	26356	24756
76156	76556	M12x1.25	M16x1.5	3	26156	26556	24756

Carbon Steel Kits - Metric Internal/Inch External Threads - Heavy Duty

Part Number	Internal Thread	External Thread	Inserts Per Kit	Insert Part Number	Tool Part Number
76243	M 6x1.0	3/8 - 16	8	26243	24843
76244	M 8x1.25	1/2 - 13	8	26244	24844
76245	M 10x1.5	5/8 - 11	6	26245	24845
76247	M 12x1.75	3/4 - 16	4	26247	24847
76248	M 14x2.0	7/8 - 14	3	26248	24848
76249	M 16x2.0	1" - 12	3	26249	24849

THE Jergens® DIFFERENCE

Keylocking Inserts

OURS

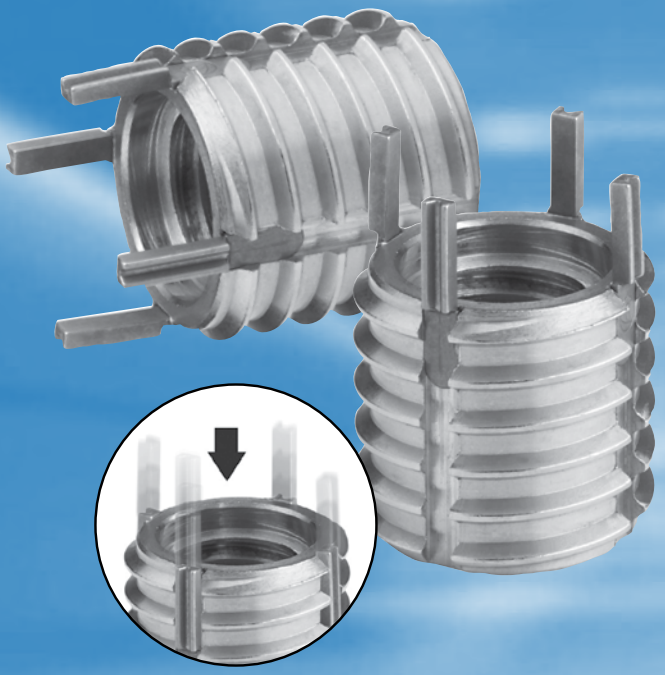

Jergens keylocking inserts are easy to install with standard drills and taps.

THEIRS

Competitive thread repair devices require special drills, taps, and installation tools.

JERGENS KEYLOCKING INSERTS	VS.	THREAD REPAIR FROM OTHER MANUFACTURERS
Easy installation requires no special tools: uses standard drills and standard taps.		Installation requires special drills, taps, and installation tools.
"Keys" mechanically lock the insert into the base material.		Springs or locking patches do not mechanically lock the insert.
Rated among the highest in pullout strength of any thread repair device on the market.		Less pullout strength versus Jergens inserts.
Wide variety of styles, including thinwall, heavy duty, extra heavy duty, and solid inserts in both stainless steel and carbon steel materials.		Limited offerings may force you to settle on a device that doesn't meet all of your needs.

15700 Waterloo Road • Cleveland, OH 44110 • 866-KWIK-LOK (594-5565) • www.jergensinc.com

Jergens®
MANUFACTURING EFFICIENCY

Miscellaneous Fasteners

Alloy Steel Pull Dowel Pins 71–73
Bolts, Spinner-Grip™ 70
Clevis Pins 77
Leveling Mounts 78
Nuts, Spinner-Grip™ 70
Pull Dowel Pins, Stainless Steel 73
Pull Dowels 74
Rod Ends 75
Washers, Heavy Duty Flat 79
Yokes 76–77

Jergens®
MANUFACTURING EFFICIENCY

Spinner-Grip™ Flange Lock Nuts

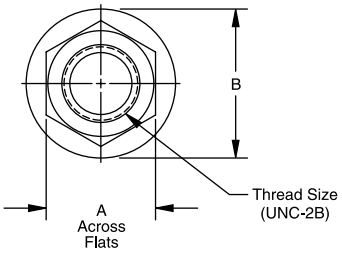

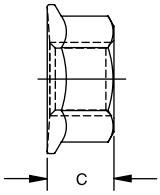

- Free spinning installation eliminates the need to wrench the nut down the fastener.
- Locks to the part, not to the threads.
- Grade 8 strength and quality, and will work with any grade fastener.
- Hardness of 28 - 38 HRC: more effective at maintaining clamp load under vibration.
- Greater temperature range than nylon insert locknuts, and will not be effected by humidity.
- Flat washers are not needed, unless in a slotted application.
- Spinner grips are not limited to 5 reuses, unlike most prevailing torque lock nuts.
- Jergens maintains inventory of Zinc plated product, as well as plain finished (un-plated) product so you can specify your plating of choice.
  (Please allow 2 – 3 weeks lead time for plating.)

Part Number						
Plain Finish	Zinc Plated	Stainless Steel	Thread Size	A	B	C
19800	**19820**	**19880**	1/4-20	7/16	19/32	1/4
19801	**19821**	**19881**	5/16-18	1/2	11/16	9/32
19802	**19822**	**19882**	3/8-16	9/16	3/4	11/32
19803	**19823**	**19883**	7/16-14	11/16	15/16	3/8
19804	**19824**	**19884**	1/2-13	3/4	1	7/16
19805	**19825**	**19885**	5/8-11	15/16	1 1/4	9/16
19806	**19826**	**19886**	3/4-10	1 1/4	1 1/2	11/16
Metric						
19807	**19827**	**19887**	M6-1.00	10	15.1	6.0
19808	**19828**	**19888**	M8-1.25	13	19.0	8.8
19809	**19829**	**19889**	M10-1.50	15	24.1	10.0
19810	**19830**	**19890**	M12-1.75	19	25.5	11.6
19811	**19831**	**19891**	M16-2.00	24	38.0	17.2

Note: Additional charges apply to plated product.
Charges vary by plating type.

Spinner-Grip™ Flange Locking Bolts

- Save time and money by eliminating the need for other locking hardware.
- Conical flange locks the bolt to the part for better holding power.
- Easily uninstalled and reused.
- Can be used in tapped holes, or through holes with the mating Spinner-Grip Nut.
- Spinner-Grip™ Bolts do not have serrations that mar the plating or surface finish of your parts or cause rusting under the bolt head.

Note: Product available made-to-order only. Minimum product quantity applies.
Contact Specialty Fasteners 866-KWIK-LOK (594-5565) for details.

Why a conical flange?

Conical design locks the bolt to the part without the need for lock washers, flat washers, locking elements, etc.

Alloy Steel Pull Dowel Pins

Jergens Offers 3 Styles of Precision Ground Pull Dowels

Spiral Groove
(Grooves Help to Relieve Trapped Air)

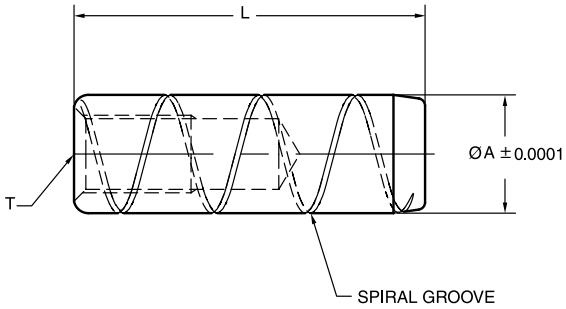

Flat Vent
(Ground Flat Helps to Relieve Trapped Air)

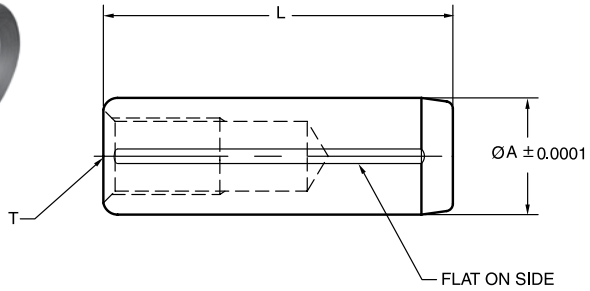

Standard Round
(Non-Vented)

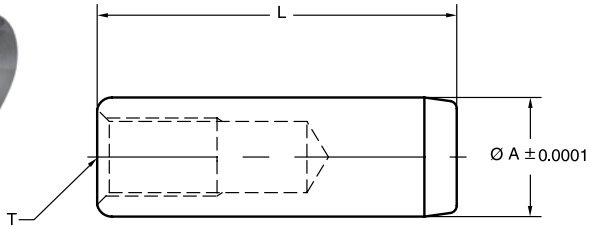

Features, Applications & Benefits

- Internally threaded hole allows removal of pull dowels with a standard screw.
- Standard Round Pull Dowels are typically used in applications featuring a through hole.
- Spiral Groove Pull Dowels feature a groove cut to allow trapped air to be released.
- Flat Vent Pull Dowels feature a ground flat on one side to release trapped air.
- Spiral Groove and Flat Vent Pull Dowels are typically used in blind hole applications.
- All of Jergens Precision Ground Pull Dowels are constructed of heat treated alloy steel.

Precision Ground Pull Dowels

Spiral Groove	Flat Vent	Standard Round	Nominal	Actual	Length	Internal Thread
31800	**31400**	**31600**	1/4	.2502	1/2	8 - 32
31801	**31401**	**31601**	1/4	.2502	3/4	8 - 32
31802	**31402**	**31602**	1/4	.2502	1	8 - 32
31803	**31403**	**31603**	1/4	.2502	1-1/4	8 - 32
31804	**31404**	**31604**	1/4	.2502	1-1/2	8 - 32
31805	**31405**	**31605**	1/4	.2502	1-3/4	8 - 32
31806	**31406**	**31606**	1/4	.2502	2	8 - 32
31807	**31407**	**31654**	1/4	.2502	2-1/4	8 - 32
31808	**31408**	**31607**	1/4	.2502	2-1/2	8 - 32
31809	**31409**	**31608**	5/16	.3127	3/4	10 - 32
31810	**31410**	**31609**	5/16	.3127	1	10 - 32
31811	**31411**	**31610**	5/16	.3127	1-1/4	10 - 32
31812	**31412**	**31611**	5/16	.3127	1-1/2	10 - 32
31813	**31413**	**31612**	5/16	.3127	2	10 - 32
31814	**31414**	**31613**	5/16	.3127	2-1/4	10 - 32
31815	**31415**	**31614**	5/16	.3127	2-1/2	10 - 32
31816	**31416**	**31615**	3/8	.3752	3/4	10 - 32
31817	**31417**	**31616**	3/8	.3752	1	10 - 32
31818	**31418**	**31617**	3/8	.3752	1-1/4	10 - 32
31819	**31419**	**31618**	3/8	.3752	1-1/2	10 - 32
31820	**31420**	**31619**	3/8	.3752	1-3/4	10 - 32
31821	**31421**	**31620**	3/8	.3752	2	10 - 32
31822	**31422**	**31621**	3/8	.3752	2-1/4	10 - 32
31823	**31423**	**31622**	3/8	.3752	2-1/2	10 - 32
31824	**31424**	**31623**	3/8	.3752	3	10 - 32
31825	**31425**	**31624**	7/16	.4377	1	1/4 - 20
31826	**31426**	**31625**	7/16	.4377	1-1/2	1/4 - 20
31827	**31427**	**31626**	7/16	.4377	2	1/4 - 20
31828	**31428**	**31627**	1/2	.5002	3/4	1/4 - 20
31829	**31429**	**31628**	1/2	.5002	1	1/4 - 20
31830	**31430**	**31629**	1/2	.5002	1-1/4	1/4 - 20
31831	**31431**	**31630**	1/2	.5002	1-1/2	1/4 - 20
31832	**31432**	**31631**	1/2	.5002	1-3/4	1/4 - 20
31833	**31433**	**31632**	1/2	.5002	2	1/4 - 20
31834	**31434**	**31633**	1/2	.5002	2-1/4	1/4 - 20
31835	**31435**	**31634**	1/2	.5002	2-1/2	1/4 - 20
31836	**31436**	**31635**	1/2	.5002	3	1/4 - 20
31837	**31437**	**31636**	1/2	.5002	3-1/2	1/4 - 20
31838	**31438**	**31637**	1/2	.5002	4	1/4 - 20
31839	**31439**	**31638**	5/8	.6252	1-1/4	1/4 - 20
31840	**31440**	**31639**	5/8	.6252	1-1/2	1/4 - 20
31841	**31441**	**31640**	5/8	.6252	2	1/4 - 20
31842	**31442**	**31641**	5/8	.6252	2-1/4	1/4 - 20
31843	**31443**	**31642**	5/8	.6252	2-1/2	1/4 - 20
31844	**31444**	**31643**	5/8	.6252	3	1/4 - 20
31845	**31445**	**31644**	5/8	.6252	4	1/4 - 20
31846	**31446**	**31645**	3/4	.7502	1-1/2	5/16 - 18
31847	**31456**	**31655**	3/4	.7502	1-3/4	5/16 - 18
31848	**31447**	**31646**	3/4	.7502	2	5/16 - 18
31849	**31448**	**31647**	3/4	.7502	2-1/2	5/16 - 18
31850	**31449**	**31648**	3/4	.7502	3	5/16 - 18
31851	**31450**	**31649**	3/4	.7502	4	5/16 - 18
31856*	**31451**	**31656**	1	1.0002	1-3/4	5/16 - 18
31852*	**31452**	**31650**	1	1.0002	2	5/16 - 18
31853*	**31453**	**31651**	1	1.0002	2-1/2	5/16 - 18
31854*	**31454**	**31652**	1	1.0002	3	5/16 - 18
31855*	**31455**	**31653**	1	1.0002	4	5/16 - 18

*3/8-16 Internal Thread

Technical Data

Material:
Alloy Steel

Length Tolerance:
± .010"

Core Hardness:
47 - 58 Rockwell C

Diameter Tolerance:
± .0001"

Surface Hardness:
60 - 64 Rockwell C

Recommended Hole Size:
.0005" under Nom. Dia.

Surface Finish:
8 Micro-Inch

Specification:
ASME B18.8.2

Spiral Groove

Flat Vent

Standard Round

Precision Ground Pull Dowels
Stainless Steel

Spiral Groove	Standard Round	Nominal	Actual	Length	Internal Thread
31800-SS	31600-SS	1/4	.2502	1/2	8 - 32
31801-SS	31601-SS	1/4	.2502	3/4	8 - 32
31802-SS	31602-SS	1/4	.2502	1	8 - 32
31803-SS	31603-SS	1/4	.2502	1-1/4	8 - 32
31804-SS	31604-SS	1/4	.2502	1-1/2	8 - 32
31805-SS	31605-SS	1/4	.2502	1-3/4	8 - 32
31806-SS	31606-SS	1/4	.2502	2	8 - 32
31807-SS	31654-SS	1/4	.2502	2-1/4	8 - 32
31808-SS	31607-SS	1/4	.2502	2-1/2	8 - 32
31809-SS	31608-SS	5/16	.3127	3/4	10 - 32
31810-SS	31609-SS	5/16	.3127	1	10 - 32
31811-SS	31610-SS	5/16	.3127	1-1/4	10 - 32
31812-SS	31611-SS	5/16	.3127	1-1/2	10 - 32
31813-SS	31612-SS	5/16	.3127	2	10 - 32
31814-SS	31613-SS	5/16	.3127	2-1/4	10 - 32
31815-SS	31614-SS	5/16	.3127	2-1/2	10 - 32
31816-SS	31615-SS	3/8	.3752	3/4	10 - 32
31817-SS	31616-SS	3/8	.3752	1	10 - 32
31818-SS	31617-SS	3/8	.3752	1-1/4	10 - 32
31819-SS	31618-SS	3/8	.3752	1-1/2	10 - 32
31820-SS	31619-SS	3/8	.3752	1-3/4	10 - 32
31821-SS	31620-SS	3/8	.3752	2	10 - 32
31822-SS	31621-SS	3/8	.3752	2-1/4	10 - 32
31823-SS	31622-SS	3/8	.3752	2-1/2	10 - 32
31824-SS	31623-SS	3/8	.3752	3	10 - 32
31825-SS	31624-SS	7/16	.4377	1	1/4 - 20
31826-SS	31625-SS	7/16	.4377	1-1/2	1/4 - 20
31827-SS	31626-SS	7/16	.4377	2	1/4 - 20
31828-SS	31627-SS	1/2	.5002	3/4	1/4 - 20
31829-SS	31628-SS	1/2	.5002	1	1/4 - 20
31830-SS	31629-SS	1/2	.5002	1-1/4	1/4 - 20
31831-SS	31630-SS	1/2	.5002	1-1/2	1/4 - 20
31832-SS	31631-SS	1/2	.5002	1-3/4	1/4 - 20
31833-SS	31632-SS	1/2	.5002	2	1/4 - 20
31834-SS	31633-SS	1/2	.5002	2-1/4	1/4 - 20
31835-SS	31634-SS	1/2	.5002	2-1/2	1/4 - 20
31836-SS	31635-SS	1/2	.5002	3	1/4 - 20
31837-SS	31636-SS	1/2	.5002	3-1/2	1/4 - 20
31838-SS	31637-SS	1/2	.5002	4	1/4 - 20
31839-SS	31638-SS	5/8	.6252	1-1/4	1/4 - 20
31840-SS	31639-SS	5/8	.6252	1-1/2	1/4 - 20
31841-SS	31640-SS	5/8	.6252	2	1/4 - 20
31842-SS	31641-SS	5/8	.6252	2-1/4	1/4 - 20
31843-SS	31642-SS	5/8	.6252	2-1/2	1/4 - 20
31844-SS	31643-SS	5/8	.6252	3	1/4 - 20
31845-SS	31644-SS	5/8	.6252	4	1/4 - 20
31846-SS	31645-SS	3/4	.7502	1-1/2	5/16 - 18
31847-SS	31655-SS	3/4	.7502	1-3/4	5/16 - 18
31848-SS	31646-SS	3/4	.7502	2	5/16 - 18
31849-SS	31647-SS	3/4	.7502	2-1/2	5/16 - 18
31850-SS	31648-SS	3/4	.7502	3	5/16 - 18
31851-SS	31649-SS	3/4	.7502	4	5/16 - 18
31856-SS*	31656-SS	1	1.0002	1-3/4	5/16 - 18
31852-SS*	31650-SS	1	1.0002	2	5/16 - 18
31853-SS*	31651-SS	1	1.0002	2-1/2	5/16 - 18
31854-SS*	31652-SS	1	1.0002	3	5/16 - 18
31855-SS*	31653-SS	1	1.0002	4	5/16 - 18

*3/8-16 Internal Thread

Technical Data

Material:
300 Series SS (18-8)

Length Tolerance:
± .010"

Diameter Tolerance:
± .0001"

Recommended Hole Size:
.0005" under Nom. Dia.

Surface Finish:
8 Micro-Inch

Specification:
ASME B18.8.2

(Parts are not heat treated/hardened)

Spiral Groove

Standard Round

Pull Dowels
Metric

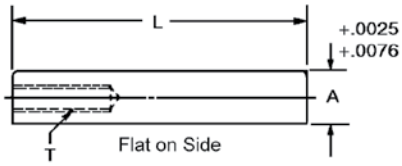

- Material: Low Carbon Steel
- Heat Treat: Case Hardened
- 3D Solid Models are available in multiple formats from www.jergensinc.com

Flat ground on the side for air release in blind holes.

Part Number	A	L	T
31751	8	20	M5 x 1.0
31753	8	30	M5 x 1.0
31755	8	40	M5 x 1.0
31759	10	20	M6 x 1.0
31761	10	30	M6 x 1.0
31763	10	40	M6 x 1.0
31765	10	50	M6 x 1.0
31767	10	70	M6 x 1.0
31769	12	20	M6 x 1.0
31771	12	30	M6 x 1.0
31773	12	40	M6 x 1.0

Part Number	A	L	T
31775	12	50	M6 x 1.0
31776	12	60	M6 x 1.0
31777	12	70	M6 x 1.0
31780	16	40	M8 x 1.25
31782	16	50	M8 x 1.25
31783	16	60	M8 x 1.25
31784	16	70	M8 x 1.25
31787	20	50	M10 x 1.6
31788	20	60	M10 x 1.6
31789	20	70	M10 x 1.6

Button head screw not included.

Rod Ends
Threaded

- Material: Alloy Steel
- Finish: Black Oxide
- Heat Treat: 32-36 Rc
- Thread: Class 2A-UNC

* 150,000 PSI Tensile

Rod Ends are forged and finished for applications not requiring flat contact with the head. All holes are reamed. Rod Ends can be used with spherical flange assemblies, flange nuts and clamp assemblies.

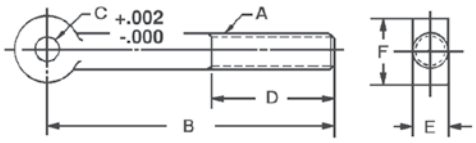

Part Number	Thread A	B	C	D Minimum	E	F	Wt. (lbs)
35301*	1/4-20	2	3/16	3/4	1/4	1/2	.04
35302	1/4-20	2	1/4	3/4	1/4	1/2	.03
35318*	5/16-18	3	1/4	1 1/2	5/16	5/8	.08
35319*	5/16-18	3	5/16	1 1/2	5/16	5/8	.08
35303*	3/8-16	3	5/16	1 1/2	3/8	3/4	.11
35320	3/8-16	4	5/16	1 3/4	3/8	3/4	.11
35304	3/8-16	2 3/16	3/8	1 1/4	3/8	3/4	.08
35305*	3/8-16	3	3/8	1 1/2	3/8	3/4	.11
35306*	3/8-16	5	3/8	2 1/2	3/8	3/4	.12
35307*	1/2-13	3 3/4	3/8	1 1/2	1/2	1	.25
35308	1/2-13	2 11/16	1/2	1 1/2	1/2	1	.19
35309	1/2-13	3 3/4	1/2	1 1/2	1/2	1	.24
35310	1/2-13	5	1/2	1 1/2	1/2	1	.31
35311	5/8-11	3 11/16	5/8	2	5/8	1 1/4	.40
35312*	5/8-11	4 1/2	5/8	2	5/8	1 1/4	.46
35314*	5/8-11	6	5/8	2 1/2	5/8	1 1/4	.60
35315*	3/4-10	4 1/2	3/4	2	3/4	1 1/2	.73
35321*	3/4-10	6	3/4	2 1/2	3/4	1 1/2	1.00
35317	1-8	8	1	3	1	2	2.25

*Conforms to TCMA. **Not to be used for lifting**.

Rod Ends
Stainless Steel

- Material: 303 Stainless
- Thread Class 2A-UNC

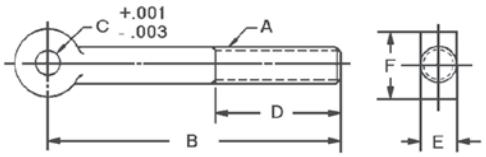

Part Number	Ref. A	B	Ref. C	D	E	F
35721	1/4-20	2 1/8	3/16	7/8	1/4	1/2
35722	1/4-20	2 1/8	1/4	7/8	1/4	1/2
35723	5/16-18	3 1/2	1/4	1 1/2	5/16	5/8
35724	5/16-18	3 1/2	5/16	1 1/2	5/16	5/8
35725	3/8-16	3 1/2	3/8	1 1/2	3/8	3/4
35726	3/8-16	5	3/8	2 1/2	3/8	3/4
35727	1/2-13	3 3/4	1/2	1 1/2	1/2	1
35728	1/2-13	5	1/2	2	1/2	1
35729	5/8-11	4 1/2	5/8	2	5/8	1 1/4
35730	5/8-11	6	5/8	3	5/8	1 1/4
35731	3/4-10	4 1/2	3/4	2	3/4	1 1/2
35732	3/4-10	6	3/4	2 1/2	3/4	1 1/2

Not to be used for lifting.

Rod Ends
Blank Forging

- Material: Standard, Alloy Steel Forging
  Stainless, 18-8 Forging

* Not Heat Treated

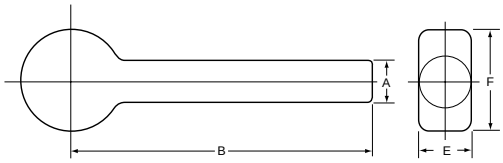

Part Number						
Standard	Stainless Steel	A	B*	E	Ref. F	Wt. (lbs)
35511	**35701**	1/4	2	1/4	1/2	.04
35512	**35702**	3/8	5	3/8	3/4	.13
35513	**35703**	1/2	6	1/2	1	.44
35514	**35704**	5/8	6	5/8	1 1/4	.70
35515	—	3/4	6	3/4	1 1/2	1.8
35516	—	1	8	1	2	2.5

*B dimension indicates minimum length. **Not to be used for lifting**.

Blank Rod Ends can be machined to your specifications; please send prints for quotation. Maximum thread length 1/2" from head.

Yokes
Tapped

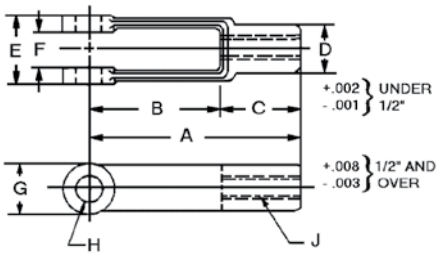

- Material: C-1021 Forging
- Finish: Black Oxide
- Thread: 2B

Jergens offers these yokes for attaching to threaded linkage at stem end. The forged holes are reamed and faced-off parallel inside and outside the yoke ends.

Part Number Coarse Pitch	UNC J	Part Number Fine Pitch	UNF J	A	B	C	D	E	F	G	H	Wt. (lbs) 10 Pcs.
		45501	10-32	1 9/16	1	9/16	5/16	7/16	3/16	3/8	3/16	.21
45302	1/4-20	**45502**	1/4-28	2	1 1/4	3/4	7/16	5/8	9/32	1/2	1/4	.62
45303	5/16-18	**45503**	5/16-24	2 1/4	1 7/16	13/16	1/2	3/4	11/32	19/32	5/16	.94
45304	3/8-16	**45504**	3/8-24	2 1/2	1 5/8	7/8	5/8	7/8	7/16	11/16	3/8	1.45
45305	7/16-14	**45505**	7/16-20	2 7/8	1 7/8	1	23/32	1	1/2	13/16	7/16	2.35
45306	1/2-13	**45506**	1/2-20	3	1 7/8	1 1/8	13/16	1 1/8	9/16	15/16	1/2	3.10
45307	1/2-13	**45507**	1/2-20	4 3/16	3 1/16	1 1/8	13/16	1 1/8	9/16	15/16	1/2	4.35
45308	5/8-11	**45508**	5/8-18	4 15/16	3 11/16	1 1/4	1 1/16	1 3/8	11/16	1 3/16	5/8	8.10
45309	3/4-10	**45509**	3/4-16	4	2 3/4	1 1/4	1 1/8	1 1/2	11/16	1 3/8	5/8	7.50
45310	3/4-10	—	—	6 1/16	4 9/16	1 1/2	1 1/4	1 5/8	13/16	1 7/16	3/4	15.00
45312	1-8	—	—	8	6	2	1 5/8	2 1/8	1 1/16	1 15/16	1	32.50

Yokes
Threaded

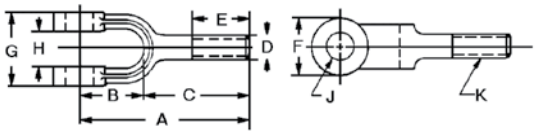

- Material: C-1021 Forging
- Finish: Black Oxide
- Thread: 2A-UNC

This style yoke is similar to the above except the stem is threaded for attaching to tapped linkage.

Part Number	K	A	B	C	D	E	F	G	H	J	Wt. (lbs) 10 Pcs.
45902	1/4-20	1 3/4	5/8	1 1/8	1/4	3/4	1/2	5/8	9/32	1/4	.47
45903	5/16-18	2	3/4	1 1/4	5/16	3/4	19/32	3/4	11/32	5/16	.85
45904	3/8-16	2 1/8	27/32	1 9/32	3/8	3/4	11/16	7/8	7/16	3/8	1.10
45906	1/2-13	2 1/2	1 1/8	1 3/8	1/2	3/4	15/16	1 1/8	9/16	1/2	2.35
45907	5/8-11	2 7/8	1 7/16	1 7/16	5/8	3/4	1 3/16	1 3/8	11/16	5/8	4.20
45908	3/4-10	3 5/8	1 11/16	1 15/16	3/4	1 1/4	1 7/16	1 5/8	13/16	3/4	7.35
45910	1-8	4 1/2	2 1/2	2	1	1 1/8	1 15/16	2 1/8	1 1/16	1	17.50

Clevis Pins

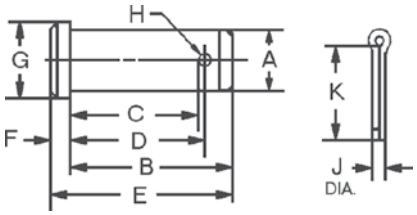

- Material: Low Carbon Steel
- All Clevis Pins supplied with cotter pins.

Part Number	A	B	C	D	E	F	G	H	J	K	Wt. (lbs) 10 Pcs.
32701	3/16	37/64	29/64	31/64	41/64	1/16	5/16	5/64	1/16	1/2	.08
32702	1/4	49/64	41/64	43/64	55/64	3/32	3/8	5/64	1/16	1/2	.15
32703	5/16	15/16	49/64	13/16	1 1/32	3/32	7/16	7/64	3/32	1/2	.30
32704	3/8	1 1/16	57/64	15/16	1 3/16	1/8	1/2	7/64	3/32	5/8	.45
32705	7/16	1 3/16	1 1/64	1 1/16	1 11/32	5/32	9/16	7/64	3/32	5/8	.60
32706	1/2	1 23/64	1 9/64	1 13/64	1 33/64	5/32	5/8	9/64	1/8	1	1.00
32707	5/8	1 39/64	1 25/64	1 29/64	1 13/16	13/64	13/16	9/64	1/8	1	1.18
32708	5/8	1 3/4	1 33/64	1 19/32	1 63/64	13/64	13/16	9/64	1/8	1	1.82
32709	3/4	1 29/32	1 41/64	1 23/32	2 5/32	1/4	15/16	11/64	5/32	1 1/2	3.00
32711	1	2 13/32	2 9/64	2 7/32	2 3/4	11/32	1 3/16	11/64	5/32	1 1/2	7.00

Leveling Mounts

- Material: 1214 Steel
- Zinc plated, yellow finish
- Non-Skid Material: Neoprene
- Case hardened, file hard
- Swivels 10° in all directions
- Available with non-skid on base
- Available in stainless steel, or with a delrin pad, and in larger sizes upon request.

Tapped

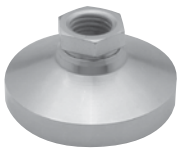

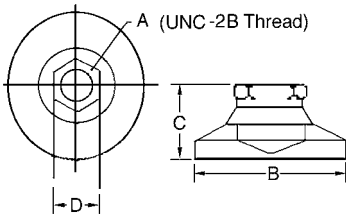

Part Number					Across Flats	Maximum Load (lbs)	
Standard	Non-skid	A	B	C*	D	Standard	Non-skid
32601	**32651**	10-32	3/4	17/32	3/8	700	550
32602	**32652**	1/4-20	1	45/64	1/2	1000	825
32606	**32656**	3/8-16	1 1/4	7/8	5/8	3750	2820
32608	**32658**	1/2-13	1 7/8	1 1/8	3/4	5000	3750
32610	**32660**	5/8-11	2 1/2	1 1/4	7/8	6000	5000
32612	**32662**	3/4-10	3	1 1/2	1 1/16	7400	6000
32616	**32666**	1-8	4	1 7/8	1 3/8	21000	16500

*Add 1/8" to C Dimension for non-skid style.

Threaded

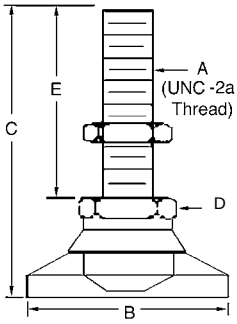

Part Number					Across Flats		Maximum Load (lbs)	
Standard	Non-skid	A	B	C*	D	E	Standard	Non-skid
32621	**32671**	10-32	3/4	1 17/32	3/8	1	700	550
32623	**32673**	1/4-20	1	1 61/64	1/2	1 1/4	1000	825
32626	**32676**	3/8-16	1 1/4	2 7/8	5/8	2	3750	2850
32629	**32679**	1/2-13	1 7/8	3 1/8	3/4	2	5000	3750
32632	**32682**	5/8-11	2 1/2	3 1/4	7/8	2	6000	4350
32635	**32685**	3/4-10	3	3 1/2	1 1/16	2	7400	5500
32640	**32690**	1-8	4	5 3/8	1 3/8	3 1/2	20000	16500

*Add 1/8" to C Dimension for non-skid style.

USAE™ Heavy Duty Flat Washers

USS + SAE = USAE

What is a USAE™ Washer?

- It is a simple but effective idea that is long overdue.
- The Outside Diameter conforms to USS standards. This provides a washer that is up to 36% larger than standard hardened washers.

More Contact Area = More Holding Power

- The Inside Diameter conforms to SAE standards. The small ID provides a more precise fit on bolts, studs, etc.
- USAE Washers are also up to 37% thicker than standard hardened washers for greater strength.
- Washers are made from mild steel. They are case hardened to 60 HRc and have a black oxide finish.
- Bolt size is stamped on each washer for easy identification.

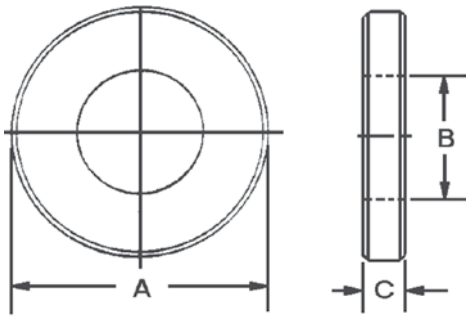

USAE™ Heavy Duty Flat Washers

Part No.	Bolt Size	A (OD)	B (ID)	C (Thickness)
FW00001	1/4	3/4	9/32	9/64
FW00002	5/16	7/8	11/32	9/64
FW00003	3/8	1	13/32	9/64
FW00004	1/2	1-3/8	17/32	5/32
FW00005	5/8	1-3/4	21/32	5/32
FW00006	3/4	2	13/16	1/4
FW00007	1	2-1/2	1-1/16	1/4

*Tolerances for all dimensions are +/- .010"

THE Jergens® DIFFERENCE

Spinner-Grip™ Flange Lock Nuts

OURS

All-metal Construction

Spinner-Grip Flange Lock Nut
All-metal construction creates a free-spinning installation.

THEIRS

Nylon Locking Mechanism

Nylon Insert Lock Nut
Nylon locks to threads making it necessary to wrench the nut down the bolt.

SPINNER-GRIP FLANGE LOCK NUTS	VS.	NYLON INSERT LOCK NUTS
Free-spinning design allows for easy installation.		Must be wrenched down the bolt threads.
Locks to the base part, allowing better hold of the entire fastener assembly.		Locks to bolt threads.
All-metal construction is more effective in harsh environmental conditions, such as high temperatures and humidity.		Heat, humidity, and moisture can soften nylon causing product failures.
Re-uses are virtually unlimited.		Limited to 5 reuses or less.

15700 Waterloo Road • Cleveland, OH 44110 • 866-KWIK-LOK (594-5565) • www.jergensinc.com

Jergens®
MANUFACTURING EFFICIENCY

Handwheels

Aluminum Angular Solid Handwheel 83
Aluminum Angular Spoked Handwheel 82
Aluminum Finger Wheel 90
Nylon Angular Three-Spoked Handwheel 89
Plastic Angular Solid Handwheel 89
Plastic Three-Spoked Handwheel 85
Plastic Three-Spoked Handwheel
With Revolving Handle 86
Plastic Two-Spoked Handwheel 84
Plastic Two-Spoked Handwheel
With Revolving Handles 84
Plastic Two-Spoked Handwheel
With Revolving Fold-Away Handle 85
Plastic Solid Handwheel 88
Plastic Solid Handwheel With Finger Grips and
Revolving Fold-Away Handle 89
Plastic Solid Handwheel
With Revolving, Fold-Away Handle 87
Plastic Solid Handwheel
With Revolving Handle 86
Plastic Solid Handwheel With Revolving,
Spring Loaded, Fold-Away Handle 87

Jergens®
MANUFACTURING EFFICIENCY

Aluminum Angular Spoked Handwheel

- Diameters from 4" to 23" and 100mm to 575mm
- Lightweight, 319 Aluminum Alloy
- Rims machined to run concentric with center drill
- Available with or without handle
- Special bores and keyways quoted upon request
- 3D Solid Models are available in multiple formats from www.jergensinc.com

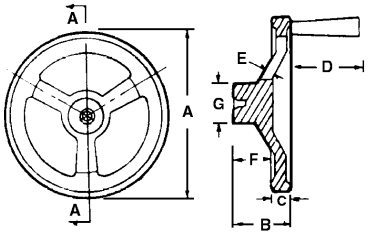

Handwheels With Handle

Part Number	A	B	C	D	E	F	G	Number Of Spokes	Part Number: Handwheel Only	Part Number: Handle Only
22308	4	1 1/2	5/8	1 5/8	1/4	1	1 3/16	2	**22108***	**21902**
22301	6	2	3/4	2 9/16	5/16	1 7/16	1 1/2	3	**22101***	**21904**
22302	8	2 1/2	7/8	2 15/16	3/8	1 7/8	2	3	**22102***	**21905**
22303	10	3	7/8	3 5/16	7/16	2 1/8	2 3/8	3	**22103***	**21906**
22304	12	3 3/8	7/8	3 5/16	7/16	2 3/16	2 1/2	3	**22104***	**21906**
22305	14	3 13/16	1	3 5/16	7/16	2 17/32	2 3/4	5	**22105***	**21906**
22306	18	4 7/8	1 1/4	3 5/16	7/16	3 1/16	4 1/8	5	**22106***	**21906**
22307	23	7 1/8	1 1/4	3 5/16	7/16	4 3/8	4 1/2	6	**22107***	**21906**

*Not tapped for handle

Metric Handwheels With Handle

Part Number	A	B	C	D	E	F	G	Number Of Spokes	Part Number: Handwheel Only	Part Number: Handle Only
22358	100	38	16	41	6	25	30	2	**22108***	**21952**
22351	150	50	19	64	8	36	38	3	**22101***	**21954**
22352	200	63	22	73	9	47	50	3	**22102***	**21955**
22353	250	75	22	83	11	53	59	3	**22103***	**21956**
22354	300	84	22	83	11	55	63	3	**22104***	**21956**
22355	350	95	25	83	11	63	69	5	**22105***	**21956**
22356	450	122	31	83	11	77	103	5	**22106***	**21956**
22357	575	178	31	83	11	110	113	6	**22107***	**21956**

*Not tapped for handle

Aluminum Angular Solid Handwheel

- Diameters from 3" to 12" and 75mm to 300mm
- Lightweight, 319 Aluminum Alloy
- Rims machined to run concentric with center drill
- Available with or without handle
- Special bores and keyways quoted upon request
- 3D Solid Models are available in multiple formats from www.jergensinc.com

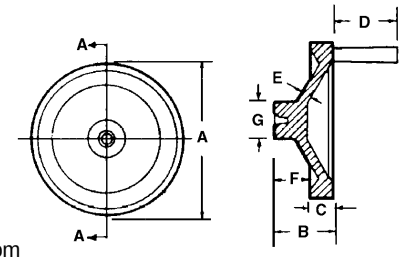

Handwheels With Handle

Part Number	A	B	C	D	E	F	G	Part Number: Handwheel Only	Part Number: Handle Only
22702	3	1 11/16	5/8	1 5/8	1/4	1 7/32	1 1/4	**22502***	**21902**
22703	4	1 7/8	5/8	1 5/8	3/16	1 7/16	1 1/2	**22503***	**21902**
22704	5	2	11/16	2 1/16	3/16	1 1/4	1 1/2	**22504***	**21903**
22705†	6	2	3/4	2 9/16	3/16	1 3/8	1 1/2	**22505*†**	**21904**
22706†	8	2 1/2	7/8	2 15/16	3/16	1 3/4	2	**22506*†**	**21905**
22707†	10	3 1/4	1	3 5/16	3/16	2 7/32	2 5/16	**22507*†**	**21906**
22708†	12	3 1/2	1	3 5/16	1/4	2 1/4	2 1/2	**22508*†**	**21906**

†Finger grips formed behind solid wheel rim

*Not tapped for handle

Metric Handwheels With Handle

Part Number	A	Ref. B	C	D	E	F	G	Part Number: Handwheel Only	Part Number: Handle Only
22752	75	42	16	41	6	30	31	**22502***	**21952**
22753	100	47	16	41	5	36	38	**22503***	**21952**
22754	125	50	17	52	5	31	38	**22504***	**21953**
22755	150	50	19	64	5	34	38	**22505***	**21954**
22756	200	63	22	73	5	44	50	**22506***	**21955**
22757	250	81	25	83	5	55	58	**22507***	**21956**
22758	300	88	25	83	6	56	63	**22508***	**21956**

*Not tapped for handle

Plastic Two-Spoked Handwheel
ELESA Original Design

- Material: High Impact Strength Technopolymer
- Finish: Black Matte
- Hub: Black Oxide Steel
- Resistant to Solvents, Oils, Greases, and other Chemical Agents

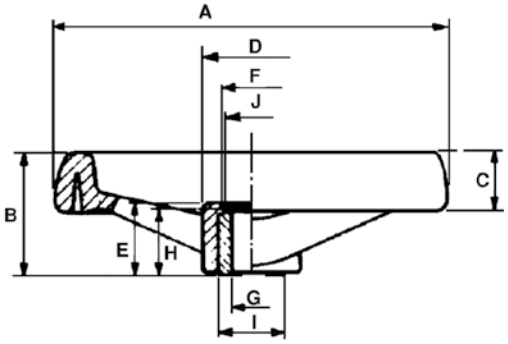

Handwheels Only

Part Number	A	B	C	D	E	F	Fractional G	H	I	J
22601	3.15	1.38	0.71	0.91	0.75	0.67	5/16	0.67	0.71	0.62
22602	3.90	1.46	0.79	0.98	0.75	0.67	3/8	0.67	0.71	0.63
22603	4.88	1.73	0.87	1.22	0.98	0.83	3/8	0.87	0.87	0.79
22604	6.30	2.01	0.98	1.57	1.14	0.98	1/2	1.06	1.02	0.94
22605	7.87	2.40	1.10	1.97	1.42	1.22	5/8	1.34	1.18	1.10
22606	8.84	2.76	1.26	2.32	1.57	1.34	5/8	1.50	1.32	1.30
22607	11.73	3.07	1.42	2.60	1.81	1.65	3/4	1.69	1.57	1.46
22608	14.67	3.23	1.50	2.72	1.81	1.65	3/4	1.69	1.57	1.46

Plastic Two-Spoked Handwheel With Revolving Handles
ELESA Original Design

- Material: High Impact Strength Technopolymer
- Finish: Black Matte
- Hub: Black Oxide Steel
- Resistant to Solvents, Oils, Greases, and other Chemical Agents

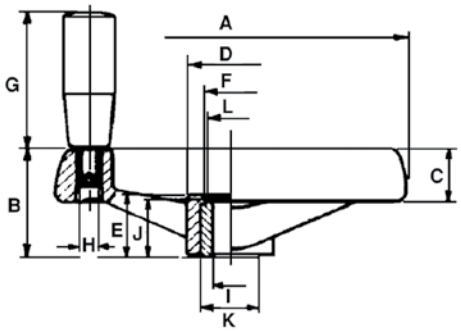

Handwheels With Revolving Handle

Part Number	A	B	C	D	E	F	G	H	I	J	K	L
22611	3.15	1.38	0.71	0.91	0.75	0.67	1.57	M6	0.312	0.67	0.71	0.63
22612	3.90	1.46	0.79	0.98	0.75	0.67	2.20	M6	0.375	0.67	0.71	0.63
22613	4.88	1.73	0.87	1.22	0.98	0.83	2.56	M8	0.375	0.87	0.87	0.79
22614	6.30	2.01	0.98	1.57	1.14	0.98	2.56	M8	0.500	1.06	1.02	0.94
22615	7.87	2.40	1.10	1.97	1.42	1.22	3.15	M8	0.625	1.34	1.18	1.10
22616	8.84	2.76	1.26	2.32	1.57	1.34	3.54	M10	0.625	1.50	1.38	1.30
22617	11.73	3.07	1.42	2.60	1.81	1.65	3.54	M10	0.750	1.69	1.57	1.46
22618	14.67	3.23	1.50	2.72	1.81	1.65	3.54	M10	0.750	1.69	1.57	1.46

Plastic Two-Spoked Handwheel With Revolving Fold-Away Handle

ELESA Original Design

- Material: High Impact Strength Technopolymer
- Finish: Black Matte
- Hub: Black Oxide Steel
- Resistant to Solvents, Oils, Greases, and other Chemical Agents

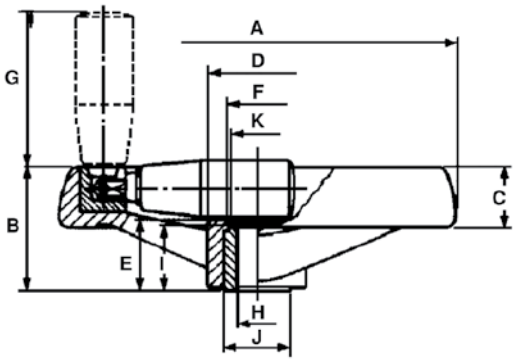

Part Number	A	B	C	D	E	F	G	H	I	J	K
22621	3.15	1.38	.71	.91	.75	.67	1.96	.312	.67	.71	.62
22622	3.90	1.46	.79	.98	.75	.67	2.20	.375	.67	.71	.63
22623	4.88	1.73	.87	1.22	.98	.83	2.56	.375	.87	.87	.79
22624	6.30	2.01	.98	1.57	1.14	.98	2.56	.500	1.06	1.02	.94
22625	7.87	2.40	1.10	1.97	1.42	1.22	3.15	.625	1.34	1.18	1.10
22626	8.84	2.76	1.26	2.32	1.57	1.34	3.54	.625	1.50	1.38	1.30

Plastic Three-Spoked Handwheel

ELESA Original Design

- Material: High Strength Reinforced Duroplast
- Finish: Black Bright
- Hub: Black Oxide Steel
- Resistant to Solvents, Oils, Greases, and other Chemical Agents

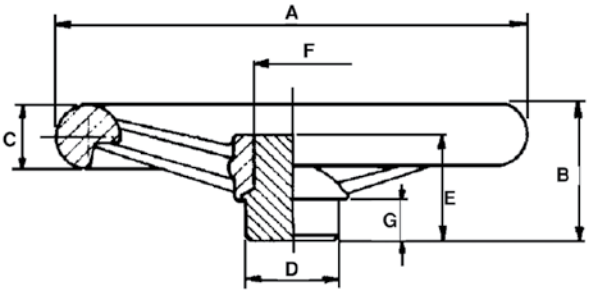

Part Number	A	B	C	D	E	F	G
22631	3.86	1.57	.55	.94	1.42	.79	.47
22632	4.88	1.77	.71	.94	1.42	.79	.47
22633	6.18	1.97	.87	1.26	1.50	.94	.59
22634	7.09	2.20	.94	1.57	1.69	1.22	.59
22635	7.80	2.20	.94	1.57	1.69	1.22	.59
22636	8.72	2.60	1.18	1.93	1.73	1.50	.59
22637	11.34	3.07	1.26	2.28	2.20	1.85	.71
22638	14.76	4.25	1.57	2.28	3.03	2.28	1.02

Plastic Three-Spoked Handwheel With Revolving Handle
ELESA Original Design

- Material: High Strength Reinforced Duroplast
- Finish: Black Bright
- Hub: Black Oxide Steel
- Resistant to Solvents, Oils, Greases, and other Chemical Agents

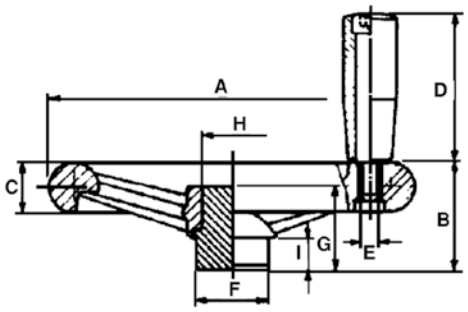

Part Number	A	B	C	D	E	F	G	H	I
22641	3.86	1.57	.55	1.57	M6	.94	1.42	.79	.47
22642	4.88	1.77	.71	1.97	M8	.94	1.42	.79	.47
22643	6.18	1.97	.87	2.56	M8	1.26	1.50	.94	.59
22644	7.09	2.20	.94	3.15	M10	1.57	1.69	1.22	.59
22645	7.80	2.20	.94	3.15	M10	1.57	1.69	1.22	.59
22646	8.72	2.60	1.18	3.54	M10	1.93	1.73	1.50	.59
22647	11.34	3.07	1.26	3.94	M12	2.28	2.20	1.85	.71
22648	14.76	4.25	1.57	3.94	M14	2.28	3.03	2.28	1.02

Plastic Solid Handwheel With Revolving Handle
ELESA Original Design

- Material: High Impact Strength Technopolymer
- Finish: Black Matte
- Hub: Black Oxide Steel
- Resistant to Solvents, Oils, Greases, and other Chemical Agents

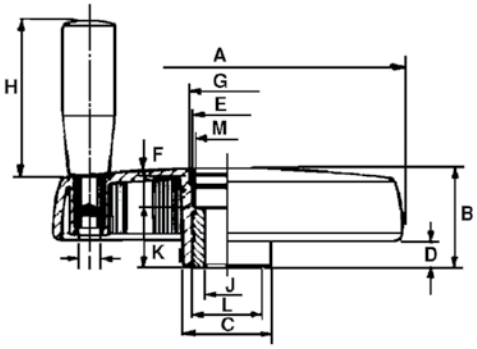

Part Number	A	B	C	D	E	F	G	H	I	J	K	L	M
22801	3.27	1.14	.98	.35	.75	.31	.82	1.57	M6	.312	.67	.71	.63
22802	4.02	1.34	1.18	.39	.98	.35	1.06	1.97	M6	.375	.87	.87	.79
22803	4.92	1.54	1.38	.43	1.10	.31	1.22	2.20	M6	.375	1.06	1.02	.94
22804	5.91	1.73	1.50	.47	1.18	.39	1.34	2.56	M8	.500	1.18	1.02	.94
22805	6.93	1.93	1.73	.51	1.38	.63	1.54	3.15	M10	.500	1.10	1.38	1.30
22806	7.87	2.09	1.97	.55	1.57	.51	1.73	3.54	M10	.625	1.42	1.57	1.50
22807	8.84	2.36	2.24	.66	1.88	.75	1.97	3.54	M10	.625	1.42	1.57	1.50

Plastic Solid Handwheel With Revolving, Fold-Away Handle
ELESA Original Design

- Material: High Impact Strength Technopolymer
- Finish: Black Matte
- Hub: Black Oxide Steel
- Resistant to Solvents, Oils, Greases, and other Chemical Agents

This type of handwheel with fold-away handle has been designed for applications where limited space or safety reasons demand that the handle be folded back flat after manual use.

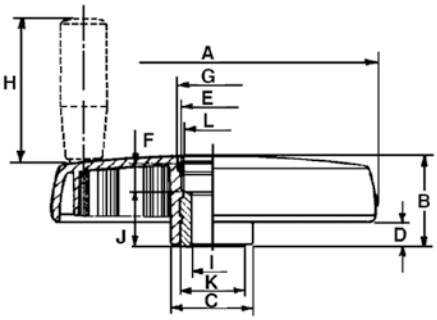

Part Number	A	B	C	D	E	F	G	H	I	J	K	L
22811	3.27	1.50	0.98	0.73	0.53	0.14	0.65	1.77	0.312	0.67	0.71	0.63
22812	4.02	1.34	1.18	0.39	0.98	0.35	1.06	1.97	0.375	0.87	0.87	0.79
22813	4.92	1.54	1.38	0.43	1.10	0.31	1.22	2.20	0.375	1.06	1.02	0.94
22814	5.91	1.73	1.50	0.47	1.18	0.39	1.34	2.56	0.50	1.18	1.02	0.94
22815	6.93	1.93	1.73	0.51	1.38	0.63	1.54	3.15	0.50	1.10	1.38	1.30
22816	7.87	2.09	1.97	0.55	1.57	0.51	1.73	3.54	0.625	1.42	1.57	1.50
22817	8.84	2.36	2.24	0.66	1.88	0.74	1.97	3.54	0.625	1.42	1.57	1.50

Plastic Solid Handwheel With Revolving, Spring Loaded, Fold-Away Handle
ELESA Original Design

- Material: High Impact Strength Technopolymer
- Finish: Black Matte
- Hub: Black Oxide Steel
- Resistant to Solvents, Oils, Greases, and other Chemical Agents

This handwheel has a special spring loaded handle which automatically folds down into the cavity of the handwheel when the operator releases it. The handle disengages only when the axial pressure exerted by the operator ceases.

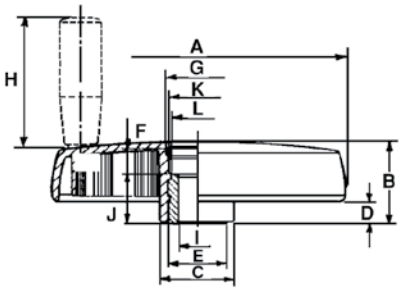

Part Number	A	B	C	D	E	F	G	H	I	J	K	L
22825	6.93	1.93	1.73	.51	1.38	.63	1.54	3.15	.500	1.10	1.38	1.30
22826	7.87	2.09	1.97	.55	1.57	.51	1.75	3.54	.625	1.42	1.57	1.50
22827	8.84	2.36	2.24	.66	1.88	.74	1.96	3.54	.625	1.42	1.57	1.50

Plastic Solid Handwheel
ELESA Original Design

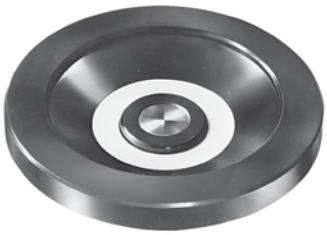

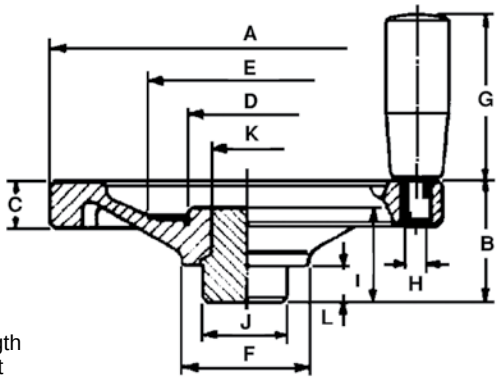

- Material: High Strength Reinforced Duroplast
- Finish: Black Bright
- Hub: Black Oxide Steel
- Resistant to Solvents, Oils, Greases, and other Chemical Agents

Part Number	A	B	C	D	E	F	G	H	I	J	K	L
22831	3.15	1.22	0.55	1.10	1.69	1.18	—	—	1.10	0.79	0.63	0.39
22841*	3.15	1.22	0.55	1.10	1.69	1.18	1.57	M6	1.10	0.79	0.63	0.39
22832	3.94	1.57	0.59	1.38	2.13	1.54	—	—	1.42	0.94	0.79	0.47
22842*	3.94	1.57	0.59	1.38	2.13	1.54	1.97	M6	1.42	0.94	0.79	0.47
22833	4.92	1.73	0.59	1.73	2.76	1.81	—	—	1.5	1.26	0.94	0.59
22843*	4.92	1.73	0.59	1.73	2.76	1.81	2.56	M8	1.5	1.26	0.94	0.59
22834	5.91	1.89	0.71	1.73	2.76	1.89	—	—	1.5	1.26	0.94	0.59
22844*	5.91	1.89	0.71	1.73	2.76	1.89	2.56	M8	1.5	1.26	0.94	0.59
22835	6.89	2.09	0.75	2.17	3.54	2.2	—	—	1.69	1.57	1.22	0.59
22845*	6.89	2.09	0.75	2.17	3.54	2.2	3.15	M10	1.69	1.57	1.22	0.59
22836	7.87	2.24	0.83	2.17	3.54	2.36	—	—	1.69	1.57	1.22	0.59
22846*	7.87	2.24	0.83	2.17	3.54	2.36	3.54	M10	1.69	1.57	1.22	0.59
22837	8.8	2.56	0.98	2.6	4.33	2.76	—	—	1.73	1.93	1.5	0.59
22847*	8.8	2.56	0.98	2.6	4.33	2.76	3.54	M10	1.73	1.93	1.5	0.59
22838	11.85	2.95	0.98	3.7	5.83	3.23	—	—	2.2	2.28	2.28	0.71
22848*	11.85	2.95	0.98	3.7	5.83	3.23	3.54	M10	2.2	2.28	2.28	0.71

* With Revolving Handle

Jergens offers 3D models

for all handles, knobs and handwheels at www.jergensinc.com

Plastic Solid Handwheel With Finger Grips and Revolving Fold-Away Handle

ELESA Original Design

- Material: High Strength Reinforced Duroplast
- Finish: Black Bright
- Hub: Black Oxide Steel
- Resistant to Solvents, Oils, Greases, and other Chemical Agents

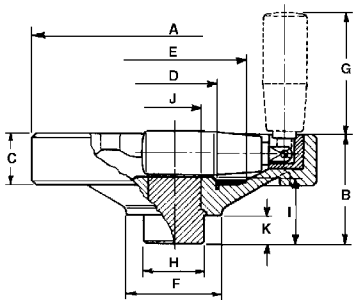

Part Number	A	B	C	D	E	F	G	H	I	J	K
22852	3.94	2.04	1.02	1.37	2.12	1.53	2.20	.94	1.29	.78	.47
22853	4.92	2.36	1.18	1.73	2.76	1.81	2.56	1.26	1.50	.94	.59
22854	5.91	2.48	1.26	1.73	2.76	1.89	2.56	1.26	1.50	.94	.59
22855	7.01	2.56	1.26	2.17	3.54	2.20	3.54	1.57	1.69	1.22	.59
22856	7.91	2.76	1.34	2.17	3.54	2.36	3.54	1.57	1.69	1.22	.59
22857	8.80	3.03	1.42	2.60	4.33	2.76	3.54	1.93	1.73	1.50	.59

Nylon Angular Three-Spoked Handwheel

- Material: Wheel, 6-6 Nylon
  Hub, Cast Iron
- Finish: Wheel, Black
  Hub, Black Oxide
- Threaded Brass Inserts have serrated O.D. for rigid union with Handwheel.
- All Wheels have three spokes
- 3D Solid Models are available in multiple formats from www.jergensinc.com

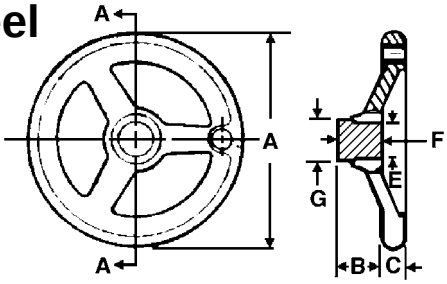

Part Number	A	B	C	E	F	G	Thread Size
34051	4	1 3/32	9/16	15/16	15/16	1 1/16	M8 x 1.25
34054	6	1 13/32	23/32	1 3/16	1 3/8	1 3/8	M10 x 1.50
34055	8	1 13/32	7/8	1 3/8	1 29/32	1 17/32	M10 x 1.50

Plastic Angular Solid Handwheel

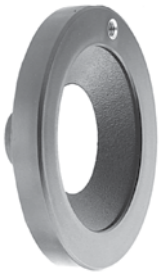

- Material: Wheel, Acetal Co-Polymer
  Hub, Cast Iron
- Finish: Wheel, Black
  Hub, Black Oxide
- Threaded Brass Inserts have serrated O.D. for rigid union with Handwheel.
- Aluminum Center Plate can be imprinted with your company name, instructions, etc.
- 3D Solid Models are available in multiple formats from www.jergensinc.com

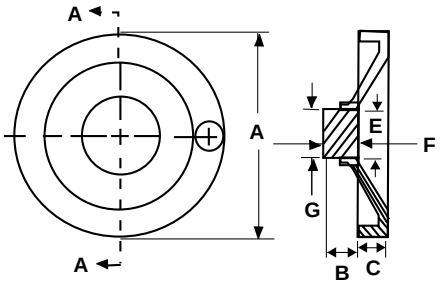

Part Number	A	B	C	E	F	G	Thread Size
34061	5	1 1/8	5/8	1	1 1/8	1 1/8	M8 x 1.25
34062	6	1 11/32	23/32	1 3/16	1 11/32	1 11/32	M10 x 1.50
34063	8	1 29/32	25/32	1 3/8	1 29/32	1 17/32	M10 x 1.50

Aluminum Finger Wheel

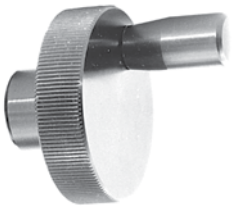

- Material: 2024 Aluminum
- Finish: Black Anodize
- Knurled O.D. for better gripping
- Revolving handle and reamed hole are included
- 3D Solid Models are available in multiple formats from www.jergensinc.com

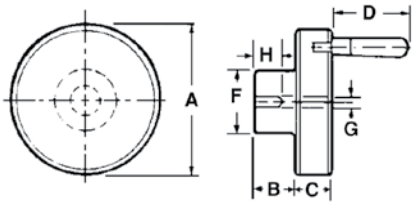

Finger Wheel With Handle

Part Number	A	B	C	D	F	G	H	Part Number	
								Wheel Only	Handle Only
22721	2	9/16	9/16	1 1/8	13/16	3/8	7/8	**22521**	**21911**

Metric Finger Wheel With Handle

Part Number	A	B	C	D	F	G	H	Part Number	
								Wheel Only	Handle Only
22771	50	14	14	28	20	10	22	**22571***	**21951**

*Not tapped for handle

Aluminum Finger Wheel

- Material: 2024 Aluminum
- Finish: Clear anodized polished to a high luster
- Outer rim is knurled

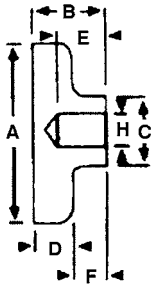

Finger Wheels

Part Number	A	B	C	D	E	F	H
21280	1	13/16	1/2	3/8	—	7/16	Blank
21281	2	1 1/8	13/16	9/16	—	9/16	Blank
21282	3	1 1/4	1 1/4	11/16	—	9/16	Blank
21285	1	13/16	1/2	3/8	5/8	7/16	1/4
21286	2	1 1/8	13/16	9/16	7/8	9/16	3/8
21287	3	1 1/4	1 1/4	11/16	7/8	9/16	5/8

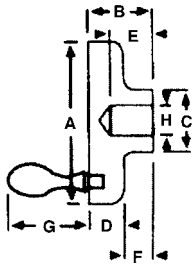

Finger Wheels With Handle

Part Number	A	B	C	D	E	F	G	H
21291	2	1 1/8	13/16	9/16	—	9/16	1 9/32	Blank
21292	3	1 1/4	1 1/4	9/16	—	9/16	1 15/16	Blank
21296	2	1 1/8	13/16	9/16	7/8	9/16	1 9/32	3/8
21297	3	1 1/4	1 1/4	9/16	7/8	9/16	1 15/16	5/8

Note: Also available in Stainless Steel

Knobs

Aluminum Hand Knob 95–96
Aluminum Hand Knob With Stud 95
Aluminum Palmgrip Knob 97
Brass Ball 99
Cast Iron Hand Knob 94
Knurled Knob 112
Knurled Knob With Stud 112
Knurled Steel Knob 97
Plain Steel Ball 99
Plastic Ball 100
Plastic Fluted Grip Knob 111
Plastic Fluted Grip Knob With Stud 111
Plastic Fluted Knob 105
Plastic Four Prong Knob 103
Plastic Four Prong Knob With Extended Prong 103
Plastic Knurled Torque Knob 104
Plastic Knurled Torque Knob With Stud 104
Plastic Knurled Knob 106
Plastic Knurled Knob With Stud 106
Plastic Knurled Grip Knob 113
Plastic Latch Type Lobe Knob 113
Plastic Lift Knob 115
Plastic Lobe Knob 107–109
Plastic Lobe Knob With Stud 110
Plastic Lobe Knob With Stainless Steel Stud 110
Plastic Oval Tapered Knob 116
Plastic Push/Pull Knob 118
Plastic Tapered Knob 115
Plastic T-Handle 114
Plastic Three-Spoked Knob 118
Plastic Wing Knob 101
Plastic Wing Knob With Stud 101
Polished Steel Ball 99
Quick Lock Hand Knob 93
Soft Touch Ball 100
Soft Touch Oval Tapered Knob 116
Soft Touch Tapered Knob 117
Speed Bar Knob 98
Steel Knurled Control Knob 92
Steel Knurled Control Knob With Stud 93
Thermoplastic Fluted Knob 105
Wing Nut 102
Wing Nut With Stud 102

Jergens®
MANUFACTURING EFFICIENCY

Steel Knurled Control Knob

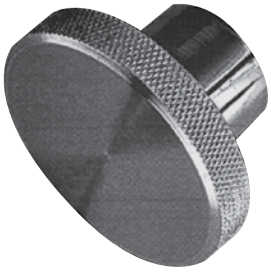

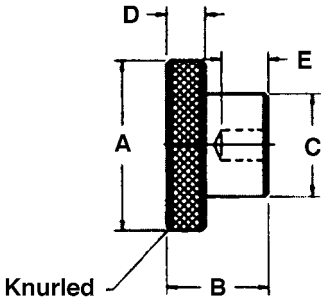

- Material: 1214 Steel
- Finish: Black Oxide
- Knurled Head

Part Number	A	B	C	D	E	Hole Diameter
21200	3/4	5/8	1/2	1/4	3/8	3/16 Ream
21201	3/4	5/8	1/2	1/4	3/8	10-24 Tap
21202	3/4	5/8	1/2	1/4	3/8	10-24 Thru Hole
21203	3/4	5/8	1/2	1/4	3/8	1/4 Ream
21204	3/4	5/8	1/2	1/4	3/8	1/4-20 Tap
21205	3/4	5/8	1/2	1/4	3/8	1/4-20 Thru Hole
21206	1	3/4	5/8	1/4	1/2	1/4 Ream
21207	1	3/4	5/8	1/4	1/2	1/4-20 Tap
21208	1	3/4	5/8	1/4	1/2	1/4-20 Thru Hole
21209	1	3/4	5/8	1/4	1/2	5/16 Ream
21210	1	3/4	5/8	1/4	1/2	5/16-18 Tap
21211	1	3/4	5/8	1/4	1/2	5/16-18 Thru Hole
21212	1 1/2	1	3/4	5/16	5/8	5/16 Ream
21213	1 1/2	1	3/4	5/16	5/8	5/16-18 Tap
21214	1 1/2	1	3/4	5/16	5/8	5/16-18 Thru Hole
21215	1 1/2	1	3/4	5/16	5/8	3/8 Ream
21216	1 1/2	1	3/4	5/16	5/8	3/8-16 Tap
21217	1 1/2	1	3/4	5/16	5/8	3/8-16 Thru Hole
21218	2	1 1/8	1	3/8	5/8	3/8 Ream
21219	2	1 1/8	1	3/8	5/8	3/8-16 Tap
21220	2	1 1/8	1	3/8	5/8	3/8-16 Thru Hole
21221	2	1 1/8	1	3/8	5/8	1/2 Ream
21222	2	1 1/8	1	3/8	5/8	1/2-13 Tap
21223	2	1 1/8	1	3/8	5/8	1/2-13 Thru Hole
21224	2 1/2	1 1/2	1 1/2	9/16	3/4	1/2 Ream
21225	2 1/2	1 1/2	1 1/2	9/16	3/4	1/2-13 Tap
21226	2 1/2	1 1/2	1 1/2	9/16	3/4	1/2-13 Thru Hole
21227	2 1/2	1 1/2	1 1/2	9/16	3/4	5/8 Ream
21228	2 1/2	1 1/2	1 1/2	9/16	3/4	5/8-11 Tap
21229	2 1/2	1 1/2	1 1/2	9/16	3/4	5/8-11 Thru Hole
21230	3	1 3/4	1 3/4	5/8	1	5/8 Ream
21231	3	1 3/4	1 3/4	5/8	1	5/8-11 Tap
21232	3	1 3/4	1 3/4	5/8	1	5/8-11 Thru Hole
21233	3	1 3/4	1 3/4	5/8	1	3/4 Ream
21234	3	1 3/4	1 3/4	5/8	1	3/4-10 Tap
21235	3	1 3/4	1 3/4	5/8	1	3/4-10 Thru Hole

Note: Also available in Metric and Stainless Steel

Steel Knurled Control Knob With Stud

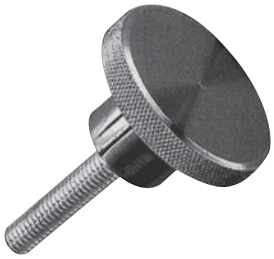

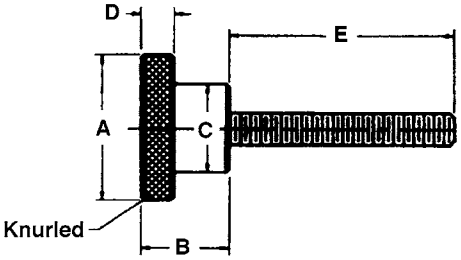

- Material: 1214 Steel
- Finish: Black Oxide
- Knurled Head

Part Number	A	B	C	D	E	Stud Thread
21240	3/4	5/8	1/2	1/4	1/2	10-24
21241	3/4	5/8	1/2	1/4	1	10-24
21242	3/4	5/8	1/2	1/4	3/4	1/4-20
21243	3/4	5/8	1/2	1/4	1 1/4	1/4-20
21244	1	3/4	5/8	1/4	1 3/4	1/4-20
21245	1	3/4	5/8	1/4	1 3/4	5/16-18
21246	1	3/4	5/8	1/4	3	5/16-18
21247	1 1/2	1	3/4	5/16	1 3/4	5/16-18
21248	1 1/2	1	3/4	5/16	3	5/16-18
21249	1 1/2	1	3/4	5/16	1 3/4	3/8-16
21250	1 1/2	1	3/4	5/16	3	3/8-16
21251	2	1 1/8	1	3/8	1 3/4	3/8-16
21252	2	1 1/8	1	3/8	3	3/8-16
21253	2	1 1/8	1	3/8	1 3/4	1/2-13
21254	2 1/2	1 1/2	1 1/2	9/16	1 3/4	1/2-13
21255	2 1/2	1 1/2	1 1/2	9/16	3	1/2-13
21256	2 1/2	1 1/2	1 1/2	9/16	1 3/4	5/8-11

Quick Lock Hand Knob

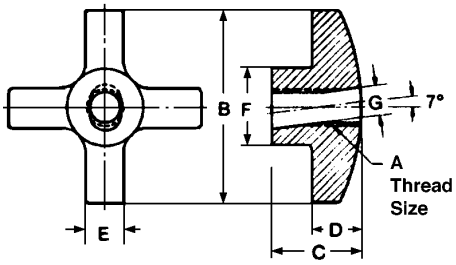

Used to save time where a knob must be completely removed from the stud. After approximately one-quarter turn of the hand knob, it can be tilted on an angle and removed from the stud. Recommended for light duty applications.

- Material: 40 Grey Iron
- Finish: Zinc Plate
- Thread: Class 2B-UNC
- 3D Solid Models are available in multiple formats from www.jergensinc.com

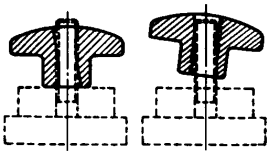

Part Number	Thread Size A	B	C	D	E	F	G	Wt. (lbs)
33901	1/4-20	1 1/8	11/16	5/16	5/16	9/16	17/64	.06
33902	3/8-16	2 3/16	1	1/2	1/2	7/8	25/64	.27
33903	1/2-13	3	1 1/4	5/8	5/8	1 7/16	33/64	.72
33904	5/8-11	3	1 1/4	5/8	5/8	1 7/16	41/64	.69

Jergens
SPECIALTY FASTENERS GROUP

Cast Iron Hand Knob

- Material: #30 Grey Iron
- Finish: Zinc Plate
- Thread: 2B-UNC
- Ream: +.002 -.000
- Hub: Available Blank, Reamed or Tapped
- 3D Solid Models are available in multiple formats from www.jergensinc.com

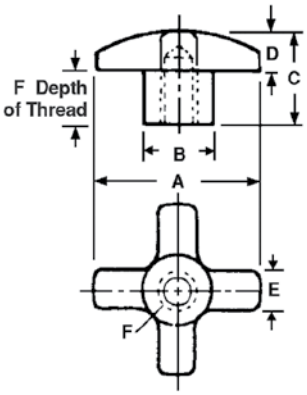

Part Number	A	B	C	D	E	Hub Style	Depth of Thread F	Wt. (lbs) 10 Pcs.
16305*	1 1/8	5/8	3/4	5/16	5/16	Blank	—	.78
16331*	1 1/8	5/8	11/16	5/16	5/16	1/4 Ream	1/2	.63
16330	1 1/8	5/8	11/16	5/16	5/16	5/16 Ream	1/2	.63
16306*	1 1/8	5/8	11/16	5/16	5/16	1/4-20 Tap	1/2	.63
16307	1 1/8	5/8	11/16	5/16	5/16	5/16-18 Tap	1/2	.63
16308*	1 1/2	11/16	15/16	7/16	3/8	Blank	—	1.56
16309*	1 1/2	11/16	7/8	7/16	3/8	5/16 Ream	9/16	1.30
16310	1 1/2	11/16	7/8	7/16	3/8	3/8 Ream	9/16	1.30
16311*	1 1/2	11/16	7/8	7/16	3/8	5/16-18 Tap	9/16	1.30
16312	1 1/2	11/16	7/8	7/16	3/8	3/8-16 Tap	9/16	1.30
16313*	2	3/4	1 3/16	1/2	1/2	Blank	—	3.00
16314*	2	3/4	1 1/8	1/2	1/2	3/8 Ream	11/16	2.75
16315	2	3/4	1 1/8	1/2	1/2	1/2 Ream	11/16	2.70
16316*	2	3/4	1 1/8	1/2	1/2	3/8-16 Tap	11/16	2.75
16317	2	3/4	1 1/8	1/2	1/2	1/2-13 Tap	11/16	2.70
16318*	2 1/2	1 1/8	1 9/16	5/8	5/8	Blank	—	7.00
16319*	2 1/2	1 1/8	1 1/2	5/8	5/8	1/2 Ream	1	6.00
16320*	2 1/2	1 1/8	1 1/2	5/8	5/8	5/8 Ream	1	5.80
16321*	2 1/2	1 1/8	1 1/2	5/8	5/8	1/2-13 Tap	1	6.00
16322*	2 1/2	1 1/8	1 1/2	5/8	5/8	5/8-11 Tap	1	5.80
16323*	3	1 1/4	1 13/16	9/16	5/8	Blank	—	11.25
16324*	3	1 1/4	1 3/4	9/16	5/8	5/8 Ream	1 1/8	10.00
16325*	3	1 1/4	1 3/4	9/16	5/8	3/4 Ream	1 1/8	8.20
16326	3	1 1/4	1 3/4	9/16	5/8	1/2-13 Tap	1 1/8	10.70
16327*	3	1 1/4	1 3/4	9/16	5/8	5/8-11 Tap	1 1/8	10.25
16328*	3	1 1/4	1 3/4	9/16	5/8	3/4-10 Tap	1 1/8	8.50

*TCMA Standard

Cast Iron Hand Knob
Metric

- Material: #30 Grey Iron
- Finish: Zinc Plate
- Thread: Class 6h
- Ream: -.000 +.05
- Blank Knobs are Zinc Plated
- 3D Solid Models are available in multiple formats from www.jergensinc.com

*Part Number	A	B	C	D	E	Hub Style	Depth of Thread F
16305	28	16	19	8	8	Blank	—
16354	28	16	17	8	8	6mm Ream	12
16355	28	16	17	8	8	M6 x 1.0 Tap	12
16308	38	17	23	11	9	Blank	—
16359	38	17	22	11	9	8mm Ream	14
16361	38	17	22	11	9	M8 x 1.25 Tap	14
16313	50	19	30	13	13	Blank	—
16364	50	19	28	13	13	10mm Ream	17
16366	50	19	28	13	13	M10 x 1.5 Tap	17
16318	63	29	39	16	16	Blank	—
16369	63	29	38	16	16	12mm Ream	25
16370	63	29	38	16	16	16mm Ream	25
16371	63	29	38	16	16	M12 x 1.75 Tap	25
16372	63	29	38	16	16	M16 x 2.0 Tap	25
16323	75	32	45	14	16	Blank	—
16374	75	32	44	14	16	16mm Ream	28
16375	75	32	44	14	16	20mm Ream	28
16377	75	32	44	14	16	M16 x 2.0 Tap	28
16378	75	32	44	14	16	M20 x 2.5 Tap	28

*Dimensions in millimeters

Aluminum Hand Knob

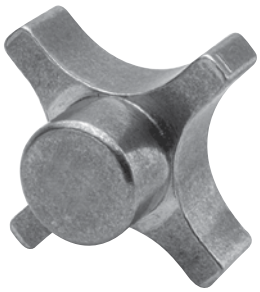

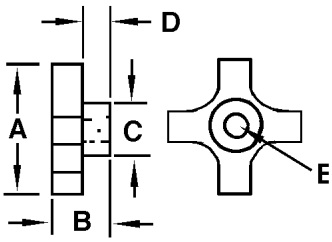

- Material: Aluminum
- Also available in black, red, blue, clear and gold anodized

Part Number	A	B	C	D	E
21000	1	7/8	1/2	1/2	Blank
21001	1	7/8	1/2	1/2	1/4-20 Tap
21002	1	7/8	1/2	1/2	1/4-20 Thru Hole
21003	1	7/8	1/2	1/2	1/4 Ream
21004	1 1/2	7/8	5/8	3/8	Blank
21005	1 1/2	7/8	5/8	3/8	5/16-18 Tap
21006	1 1/2	7/8	5/8	3/8	5/16-18 Thru Hole
21007	1 1/2	7/8	5/8	3/8	5/16 Ream
21008	2	1	13/16	1/2	Blank
21009	2	1	13/16	1/2	3/8-16 Tap
21010	2	1	13/16	1/2	3/8-16 Thru Hole
21011	2	1	13/16	1/2	3/8 Ream
21012	2 1/2	1 1/8	1	9/16	Blank
21013	2 1/2	1 1/8	1	9/16	1/2-13 Tap
21014	2 1/2	1 1/8	1	9/16	1/2-13 Thru Hole
21015	2 1/2	1 1/8	1	9/16	1/2 Ream

Note: Also available in metric sizes.

Aluminum Hand Knob With Stud

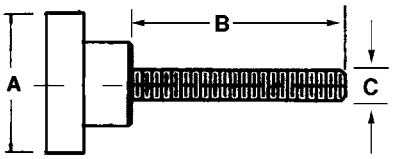

- Material: Aluminum
- Also available in black, red, blue, clear and gold anodized

Part Number	A	B	C
21020	1 1/2	1 3/4	1/4-20
21021	1 1/2	3	1/4-20
21022	2	1 3/4	5/16-18
21023	2	3	5/16-18
21024	2 1/2	1 3/4	3/8-16
21025	2 1/2	3	3/8-16
21026	2 1/2	1 3/4	1/2-13
21027	2 1/2	3	1/2-13

Note: Also available in metric sizes.

Aluminum Hand Knob

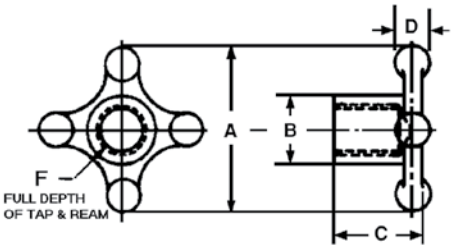

- Material: 319 Aluminum Alloy
- Thread: 2B-UNC
- Ream: +.002
  -.000
- 3D Solid Models are available in multiple formats from www.jergensinc.com

Part Number	A	B	C	D	Hub Style	F	Wt. (lbs) 10 Pcs.
21101	1 1/4	9/16	3/4	5/16	Blank	—	.21
21102	1 1/4	9/16	3/4	5/16	1/4 Ream	1/2	.16
21104	1 1/4	9/16	3/4	5/16	1/4-20 Tap	1/2	.16
21105	1 1/4	9/16	3/4	5/16	5/16-18 Tap	1/2	.16
21106	1 1/2	11/16	7/8	3/8	Blank	—	.47
21108	1 1/2	11/16	7/8	3/8	3/8 Ream	5/8	.31
21109	1 1/2	11/16	7/8	3/8	5/16-18 Tap	5/8	.31
21110	1 1/2	11/16	7/8	3/8	3/8-16 Tap	5/8	.31
21111	2 1/8	7/8	1 1/4	1/2	Blank	—	1.10
21112	2 1/8	7/8	1 1/4	1/2	3/8 Ream	7/8	1.00
21113	2 1/8	7/8	1 1/4	1/2	1/2 Ream	7/8	1.00
21114	2 1/8	7/8	1 1/4	1/2	3/8-16 Tap	7/8	1.00
21115	2 1/8	7/8	1 1/4	1/2	1/2-13 Tap	7/8	1.00
21116	3	1 3/8	1 3/4	11/16	Blank	—	3.80
21118	3	1 3/8	1 3/4	11/16	5/8 Ream	1 1/4	3.30
21119	3	1 3/8	1 3/4	11/16	3/4 Ream	1 1/4	3.10
21120	3	1 3/8	1 3/4	11/16	1/2-13 Tap	1 1/4	3.40
21121	3	1 3/8	1 3/4	11/16	5/8-11 Tap	1 1/4	3.30
21122	3	1 3/8	1 3/4	11/16	3/4-10 Tap	1 1/4	3.10

Aluminum Hand Knob
Metric

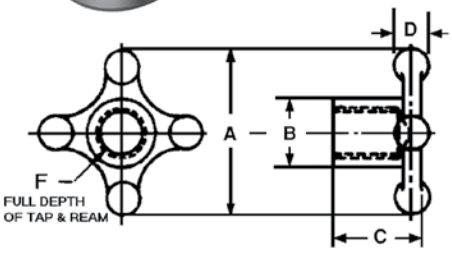

- Material: 319 Aluminum Alloy
- Thread: Class 6h
- Ream: +.05
  -.000

*Part Number	A	B	C	D	Hub Style	F
21101	31	14	19	8	Blank	–
21152	31	14	19	8	6mm Ream	13
21154	31	14	19	8	M6 Tap	13
21155	31	14	19	8	M8 Tap	13
21106	38	17	22	9	Blank	–
21158	38	17	22	9	10mm Ream	16
21159	38	17	22	9	M8 Tap	16
21160	38	17	22	9	M10 Tap	16
21111	53	22	32	12	Blank	–
21162	53	22	32	12	10mm Ream	22
21163	53	22	32	12	12mm Ream	22
21164	53	22	32	12	M10 Tap	22
21165	53	22	32	12	M12 Tap	22
21116	75	34	44	17	Blank	–
21168	75	34	44	17	16mm Ream	32
21169	75	34	44	17	20mm Ream	32
21170	75	34	44	17	M12 Tap	32
21171	75	34	44	17	M16 Tap	32
21172	75	34	44	17	M20 Tap	32

*Dimensions in millimeters

Aluminum Palmgrip Knob

Full Depth of Tap and Ream

- Material: 319 Aluminum Alloy
- Finish: Tumble
- Thread: 2B-UNC or Class 6h
- Ream: +.002 -.000
- Metric Ream: +.05 -.000
- 3D Solid Models are available in multiple formats from www.jergensinc.com

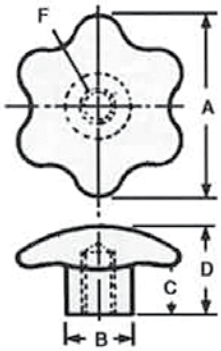

Inch

Part Number	A	B	C	D	F	Hub Style
20901	1 1/2	27/32	7/8	3/8	—	Blank
20902	1 1/2	27/32	7/8	1 5/16	3/4	1/4 Ream
20903	1 1/2	27/32	7/8	1 5/16	3/4	1/4-20 Tap
20904	2	1	7/8	1 19/32	—	Blank
20905	2	1	7/8	1 1/2	3/4	3/8 Ream
20906	2	1	7/8	1 1/2	3/4	3/8-16 Tap
20907	2 3/4	1 3/16	1 1/8	1 31/32	—	Blank
20908	2 3/4	1 3/16	1 1/8	1 7/8	1 1/4	1/2 Ream
20909	2 3/4	1 3/16	1 1/8	1 7/8	1 1/4	1/2-13 Tap
20910	3 1/2	1 1/4	1	1 13/16	—	Blank
20911	3 1/2	1 1/4	1	1 3/4	1 1/4	1/2 Ream
20912	3 1/2	1 1/4	1	1 3/4	1 1/4	1/2-13 Tap

Metric

*Part Number	A	B	C	D	F	Hub Style
20901	38	19	22	34	—	Blank
20952	38	19	22	33	19	6mm Ream
20953	38	19	22	33	19	M6 Tap
20904	50	25	22	40	—	Blank
20955	50	25	22	38	19	10mm Ream
20956	50	25	22	38	19	M10 Tap
20907	69	30	29	49	—	Blank
20958	69	30	29	47	31	12mm Ream
20959	69	30	29	47	31	M12 Tap
20910	88	31	25	45	—	Blank
20961	88	31	25	44	31	12mm Ream
20962	88	31	25	44	31	M12 Tap

*Dimensions in millimeters

Knurled Steel Knob

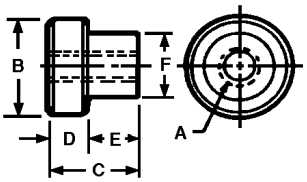

- Material: Low Carbon Steel
- Finish: Black Oxide
- Thread: 2B-UNC or Class 6h
- 3D Solid Models are available in multiple formats from www.jergensinc.com

Inch

Part Number	A	B	C	D	E	F
27901	10-24	3/4	5/8	1/4	3/8	7/16
27902	1/4-20	1	3/4	1/4	1/2	5/8
27903	3/8-16	1 1/4	1 1/8	1/2	5/8	3/4
27904	1/2-13	1 1/2	1 1/4	1/2	3/4	1
27905	5/8-11	2	1 3/4	5/8	1 1/8	1 1/4
27906	3/4-10	2 1/2	2 1/4	5/8	1 5/8	1 1/2

Metric

*Part Number	A	B	C	D	E	F
27951	M5 x 0.8	19	16	6	9	11
27952	M6 x 1.0	25	19	6	13	16
27953	M10 x 1.5	31	28	13	16	19
27954	M12 x 1.75	38	31	13	19	25
27955	M16 x 2.0	50	44	16	28	31
27956	M20 x 2.5	63	57	16	41	38

*Dimensions in millimeters

Speed Bar Knob

Speed Bar Knobs offer the ultimate in strength to hold down covers and clamp heavy work pieces. Insert bar between four vertical prongs for maximum leverage and holding force. One extra long prong is available on part numbers **40706** and **40707** for use with a crank handle.

- Material: Malleable ASTM 32510
- Finish: Mill
- Thread: 2B-UNC or Metric Class 6h
- 3D Solid Models are available in multiple formats from www.jergensinc.com

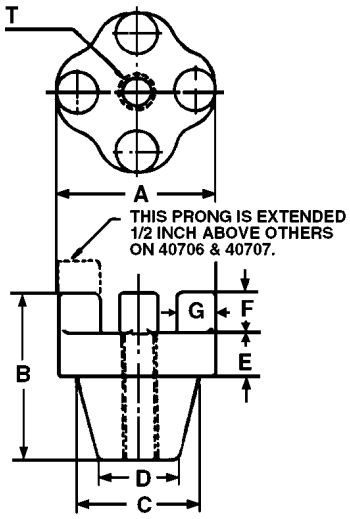

Inch

Part Number	A	B	C	D	E	F	G	T	Wt. (lbs)
40701	2	2 1/8	1 1/4	1 1/8	1/2	3/4	1/2	Blank	0.80
40711	2	2 1/8	1 1/4	1 1/8	1/2	3/4	1/2	3/8-16	0.76
40702	2	2 1/8	1 1/4	1 1/8	1/2	3/4	1/2	1/2-13	0.72
40712	2	2 1/8	1 1/4	1 1/8	1/2	3/4	1/2	5/8-11	0.68
40703	2 1/2	2 3/8	1 3/4	1 1/2	9/16	7/8	5/8	Blank	1.56
40713	2 1/2	2 3/8	1 3/4	1 1/2	9/16	7/8	5/8	1/2-13	1.48
40704	2 1/2	2 3/8	1 3/4	1 1/2	9/16	7/8	5/8	5/8-11	1.44
40705	2 1/2	2 3/8	1 3/8	1 1/2	9/16	7/8	5/8	3/4-10	1.44
40706	3 1/2	2 3/8	2 3/8	2 1/8	1/2	7/8	5/8	Blank	2.50
40715	3 1/2	2 3/8	2 3/8	2 1/8	1/2	7/8	5/8	7/8-09	2.38
40707	3 1/2	2 3/8	2 3/8	2 1/8	1/2	7/8	5/8	1-8	2.25

Metric

Part Number**	A	B	C	D	E	F	G	T
40701	50	53	31	28	12	19	12	Blank
40752	50	53	31	28	12	19	12	M12
40703	63	59	44	38	14	22	16	Blank
40754	63	59	44	38	14	22	16	M16
40755	63	59	44	38	14	22	16	M20
40706*	88	59	59	53	12	22	16	Blank
40757*	88	59	59	53	12	22	16	M24

*Note: One extra long prong is available on part numbers 40706 and 40757 for use with a crank handle.

**Dimensions in millimeters

Plain Steel Ball

- Material: Carbon Steel
- Finish: Black Oxide
- Available Tapped or Blank
- 3D Solid Models are available in multiple formats from www.jergensinc.com

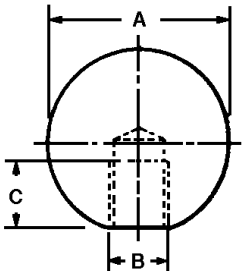

Part Number	A	B	C
36511	1 1/2	Blank	—
36512	1 1/2	3/8-16	5/8
36513	2	Blank	—
36514	2	1/2-13	3/4
36515	2	5/8-11	7/8

Polished Steel Ball

- Material: Steel
- Finish: Polished

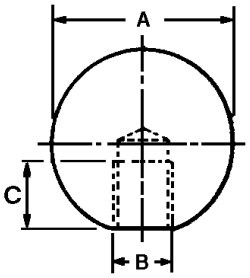

Part Number	A	B	C
36520	3/4	10-32	3/8
36521	1	10-32	3/8
36522	1	1/4-20	1/2
36523	1	5/16-18	1/2
36524	1	3/8-16	1/2
36525	1 3/8	1/4-20	5/8
36526	1 3/8	5/16-18	5/8
36527	1 3/8	3/8-16	5/8
36528	1 3/8	1/2-13	5/8
36529	1 7/8	3/8-16	3/4
36530	1 7/8	1/2-13	3/4
36531	1 7/8	5/8-11	3/4

Brass Ball

- Material: Brass
- Finish: Polished
- Water Resistant

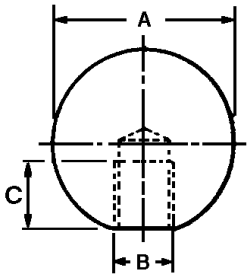

Part Number	A	B	C
36540	3/4	10-32	3/8
36541	1	10-32	3/8
36542	1	1/4-20	1/2
36543	1	5/16-18	1/2
36544	1	3/8-16	1/2
36545	1 3/8	1/4-20	5/8
36546	1 3/8	5/16-18	5/8
36547	1 3/8	3/8-16	5/8
36548	1 3/8	1/2-13	5/8
36549	1 7/8	3/8-16	3/4
36550	1 7/8	1/2-13	3/4
36551	1 7/8	5/8-11	3/4

Plastic Ball

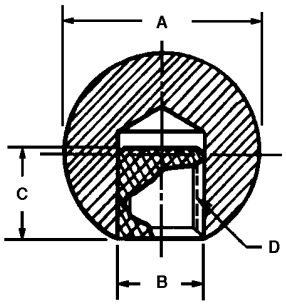

- Material: Plastic, Black
- Insert: Brass
- Finish: Tumble, Sand, & Buff
- 3D Solid Models are available in multiple formats from www.jergensinc.com

Black Part Number	A	B	C	Brass Insert D
31301	3/4	1/4	5/16	10-32
31316	3/4	1/4	5/16	1/4-20
31317	1	1/2	1/2	10-32
31302	1	1/2	7/16	1/4-20
31308	1	1/2	7/16	5/16-18
31303	1	1/2	1/2	3/8-16
31318	1 3/8	5/8	5/8	1/4-20
31309	1 3/8	5/8	7/16	5/16-18
31304	1 3/8	5/8	1/2	3/8-16
31310	1 3/8	5/8	1/2	3/8-24
31305	1 3/8	5/8	5/8	1/2-13
31311	1 3/8	5/8	5/8	1/2-20
31319	1 5/8	11/16	5/8	5/16-18
31314	1 5/8	11/16	1/2	3/8-16
31315	1 5/8	11/16	5/8	1/2-13
31320	1 7/8	3/4	7/16	5/16-18
31312	1 7/8	3/4	1/2	3/8-16
31306	1 7/8	3/4	5/8	1/2-13
31313	1 7/8	3/4	5/8	1/2-20
31307	1 7/8	3/4	3/4	5/8-18

Soft Touch Ball

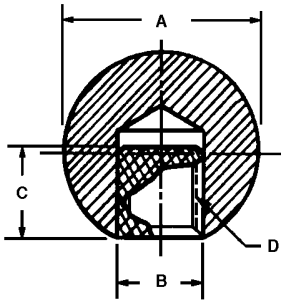

- Material: Soft Touch Plastic
- Finish: Black Matte
- Insert: Brass
- Also available in red, blue, yellow, and green (250 piece minimum)

Part Number	A	B	C	Insert D
31330	1 1/2	1 15/64	5/8	1/4-20 x 5/8
31331	1 1/2	1 15/64	5/8	5/16-18 x 5/8
31332	1 1/2	1 15/64	5/8	3/8-16 x 5/8
31333	1 1/2	1 15/64	5/8	1/2-13 x 5/8

This Ball Knob has a soft touch material which enables the operator to get a better grip on the knob for many different types of operations.

Plastic Wing Knob
ELESA Original Design
Metric

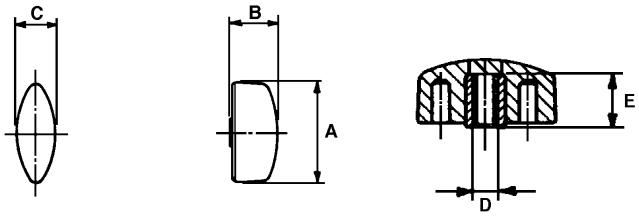

- Material: Glass-Fibre Reinforced Black Technopolymer
- Finish: Black Matte
- Insert: Brass with tapped blind hole
- Resistant to Solvents, Oils, Greases, and other Chemical Agents

Part Number*	A	B	C	D	E
33776	26	13	11	M5	5
33777	32	15	13	M6	8
33778	40	17	15.5	M8	8

*Dimensions in millimeters

Plastic Wing Knob With Stud
ELESA Original Design

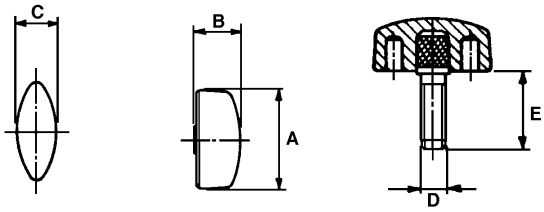

- Material: Glass-Fibre Reinforced Black Technopolymer
- Finish: Black Matte
- Zinc-Plated Steel Stud with chamfered flat end
- Resistant to Solvents, Oils, Greases, and other Chemical Agents

Inch

Part Number	A	B	C	D	E
33765	1.02	.51	.43	10-32	.500
33766	1.02	.51	.43	10-32	.750
33767	1.26	.59	.51	1/4-20	.500
33768	1.26	.59	.51	1/4-20	.750
33769	1.26	.59	.51	1/4-20	1.000
33770	1.57	.67	.61	5/16-18	.750
33771	1.57	.67	.61	5/16-18	1.000

Metric

Part Number*	A	B	C	D	E
33781	26	13	11	M5	16
33782	32	15	13	M6	16
33783	32	15	13	M8	16
33784	40	17	15.5	M8	25
33785	40	17	15.5	M10	30

*Dimensions in millimeters

Wing Nut
ELESA Orginal Design

- Material: Glass Fibre Reinforced Technopolymer
- Finish: Gray/Black Matte
- Insert: Brass With Tapped Hole
- Resistant to Solvents, Oils, Greases, and other Chemical Agents
- Optional cap colors available upon request (Black, Grey, Yellow, Blue & Red)

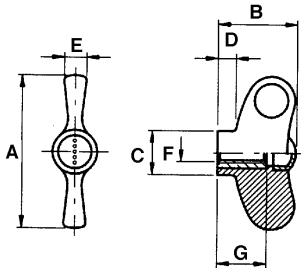

Part Number	A	B	C	D	E	F	G
34450	2.17	1.1	0.63	0.26	0.31	1/4-20	0.71
34451	2.17	1.1	0.63	0.26	0.31	5/16-18	0.71
34452	2.76	1.42	0.79	0.31	0.39	5/16-18	0.79
34453	2.76	1.42	0.79	0.31	0.39	3/8-16	0.79

Wing Nut With Stud
ELESA Orginal Design

- Material: Glass Fibre Reinforced Technopolymer
- Finish: Gray/Black Matte
- Stud: Zinc Plated Threaded Steel With Chamfered End
- Resistant to Solvents, Oils, Greases, and other Chemical Agents
- Optional cap colors available upon request (Black, Grey, Yellow, Blue & Red)

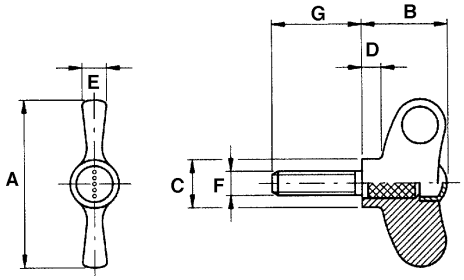

Part Number	A	B	C	D	E	F	G
34455	2.17	1.10	.63	.26	.31	5/16-18	1.00
34456	2.17	1.10	.63	.26	.31	5/16-18	1.50
34457	2.76	1.42	.79	.31	.39	3/8-16	1.00
34458	2.76	1.42	.79	.31	.39	3/8-16	1.50

Plastic Four Prong Knob

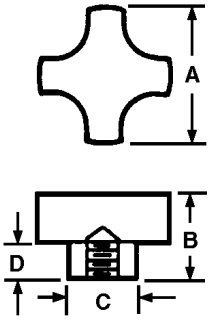

- Material: Plastic
- Finish: Tumble
- Insert: Brass
- Excellent gripping action for turning and tightening uses: adjusting devices, tripods, lawn mower height adjustments, valve controls, etc.
- 3D Solid Models are available in multiple formats from www.jergensinc.com

Part Number	Insert Thread and Depth	A	B	C	D
32201	1/4-20 x 7/16	1 1/4	7/8	5/8	3/8
32270	5/16-18 x 7/16	1 1/4	7/8	5/8	3/8
32202*	1/4-20 x 1/2	1 1/4	7/8	5/8	3/8
32271	1/4-20 x 7/16	1 3/4	1	13/16	1/2
32203	5/16-18 x 7/16	1 3/4	1	13/16	1/2
32204*	5/16-18 x 5/8	1 3/4	1	13/16	1/2
32272*	1/4-20 x 5/8	1 3/4	1	13/16	1/2
32205	3/8-16 x 1/2	1 3/4	1	13/16	1/2
32206*	3/8-16 x 5/8	1 3/4	1	13/16	1/2
32207	3/8-16 x 1/2	2 1/4	1 1/8	1	9/16
32273	5/16-18 x 1/2	2 1/4	1 1/8	1	9/16
32208*	3/8-16 x 5/8	2 1/4	1 1/8	1	9/16
32274*	5/16-18 x 5/8	2 1/4	1 1/8	1	9/16
32209	1/2-13 x 5/8	2 1/4	1 1/8	1	9/16
32210*	1/2-13 x 5/8	2 1/4	1 1/8	1	9/16

*Indicates knobs with through clearance hole.

Plastic Four Prong Knob With Extended Prong

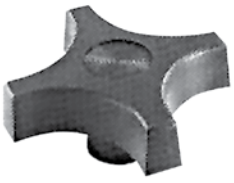

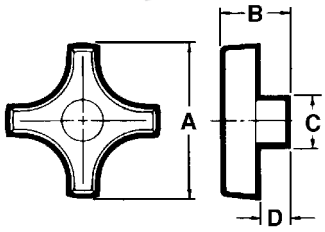

- Material: Polypropylene
- Finish: Tumble
- Insert: Brass

Part Number	A	B	C	D	Insert
32260	3	1 1/4	7/8	5/8	1/4-20
32261*	3	1 1/4	7/8	5/8	1/4-20
32262	3	1 1/4	7/8	5/8	5/16-18
32263*	3	1 1/4	7/8	5/8	5/16-18
32264	3	1 1/4	7/8	5/8	3/8-16
32265*	3	1 1/4	7/8	5/8	3/8-16

* Through Hole Style

Plastic Knurled Torque Knob

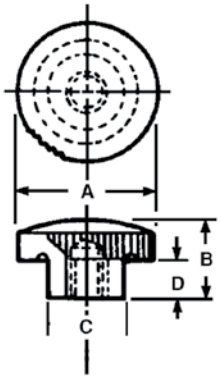

- Material: Plastic
- Finish: Tumble
- Knurled edge for non-slip grip
- Insert Threads: Brass
- 3D Solid Models are available in multiple formats from www.jergensinc.com

Part Number	Insert Thread and Depth	A	B	C	D
32324	8-32 x 5/16	3/4	9/16	5/8	—
32325	10-32 x 5/16	3/4	9/16	5/8	—
32328	1/4-20 x 3/8	3/4	9/16	5/8	—
32301	10-32 x 5/16	1	21/32	5/8	5/16
32303	1/4-20 x 3/8	1	21/32	5/8	5/16
32305	1/4-20 x 7/16	1 3/8	25/32	3/4	3/8
32308	5/16-18 x 7/16	1 3/8	25/32	3/4	3/8
32310	3/8-16 x 3/8	1 3/8	25/32	3/4	3/8
32311	5/16-18 x 7/16	1 7/8	1	1	1/2
32312	3/8-16 x 1/2	1 7/8	1	1	1/2
32315	Bushing*	1 7/8	1	1	1/2

*.377 I.D. x 1/2" O.D. x 1/2" long plain hole brass bushing, drilled and tapped for one #10-32 set screw.

Plastic Knurled Torque Knob With Stud

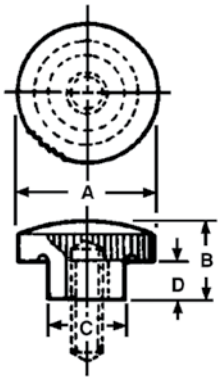

- Material: Plastic
- Finish: Tumble
- Knurled edge for non-slip grip
- Stud Threads: Zinc Plated Steel
- 3D Solid Models are available in multiple formats from www.jergensinc.com

Part Number	Stud Thread and Length	A	B	C	D
32326	10-32 x 1/2	3/4	9/16	5/8	—
32327	10-32 x 1	3/4	9/16	5/8	—
32329	1/4-20 x 1/2	3/4	9/16	5/8	—
32330	1/4-20 x 1	3/4	9/16	5/8	—
32302	10-32 x 1	1	21/32	5/8	5/16
32304	1/4-20 x 1	1	21/32	5/8	5/16
32334	5/16-18 x 1	1	21/32	5/8	5/16
32306	1/4-20 x 1	1 3/8	25/32	3/4	3/8
32307	1/4-20 x 2	1 3/8	25/32	3/4	3/8
32331	5/16-18 x 1	1 3/8	25/32	3/4	3/8
32309	5/16-18 x 2	1 3/8	25/32	3/4	3/8
32332	3/8-16 x 1	1 3/8	25/32	3/4	3/8
32333	5/16-18 x 1	1 7/8	1	1	1/2
32313	3/8-16 x 1	1 7/8	1	1	1/2

Plastic Fluted Knob

- Material: Plastic
- Finish: Tumble
- Insert Threads: Brass
- Bushing: Brass
- Stud Threads: Zinc Plated Steel
- For heavy torque applications, clamping devices, adjusting rods
- 3D Solid Models are available in multiple formats from www.jergensinc.com

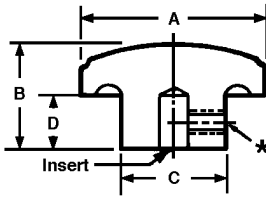

Part Number	Insert Thread and Depth	Stud Thread and Length	A	B	C	D
32320	1/4-20 x 7/16	—	1 3/8	27/32	27/32	25/64
32340	—	1/4-20 x 1	1 3/8	27/32	27/32	25/64
32321	5/16-18 x 7/16	—	1 3/8	27/32	27/32	25/64
32341	—	5/16-18 x 1	1 3/8	27/32	27/32	25/64
32342	—	3/8-16 x 1	1 3/8	27/32	27/32	25/64
32343	—	1/4-20 x 1	1 3/4	1 1/16	1 1/16	1/2
32322	5/16-18 x 7/16	—	1 3/4	1 1/16	1 1/16	1/2
32344	—	5/16-18 x 1	1 3/4	1 1/16	1 1/16	1/2
32323	3/8-16 x 1/2	—	1 3/4	1 1/16	1 1/16	1/2
32345	—	3/8-16 x 1	1 3/4	1 1/16	1 1/16	1/2
32346	1/4-20 x 7/16	—	1 3/4	1 1/16	1 1/16	1/2
32316	3/8-16 x 1/2	—	2 3/8	1 5/16	1 1/4	5/8
32347	5/16-18 x 7/16	—	2 3/8	1 5/16	1 1/4	5/8
32317	—	3/8-16 x 1	2 3/8	1 5/16	1 1/4	5/8
32318	—	3/8-16 x 2	2 3/8	1 5/16	1 1/4	5/8
32348	—	5/16-18 x 1	2 3/8	1 5/16	1 1/4	5/8
32319	Bushing*	—	2 3/8	1 5/16	1 1/4	5/8

*.377 I.D. x 1/2" O.D. x 1/2" deep plain brass bushing, drilled and tapped for one #10-32 set screw.

Thermoplastic Fluted Knob

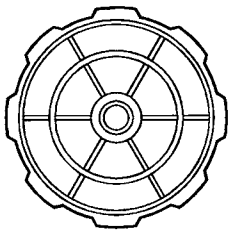

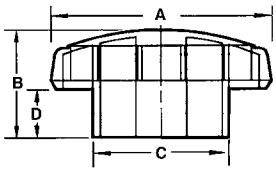

- Material: Thermoplastic
- Finish: Black Matte
- Insert: Brass
- Textured surface resists scratches, nicks, and fingerprints
- Also available in red, blue, yellow, and green
- A standard 1" stud is available, other lengths available upon request.

Part Number	A	B	C	D	Insert
32350	3 1/4	1 3/8	2	3/4	1/4-20 x 5/8
32351	3 1/4	1 3/8	2	3/4	5/16-18 x 3/4
32352	3 1/4	1 3/8	2	3/4	3/8-16 x 7/8

Plastic Knurled Knob
ELESA Original Design

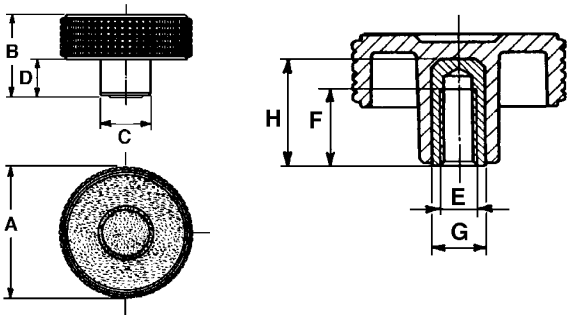

- Material: High Impact Strength Technopolymer
- Finish: Black Matte
- Brass Insert with tapped or plain blind hole
- Knobs with plain blind hole complete with set screw
- Resistant to Solvents, Oils, Greases, and other Chemical Agents

Part Number	A	B	C	D	E	Set Screw	F	G	H
33801	1.22	.87	.59	.35	1/4-20	—	.47	—	—
33802	1.57	.94	.67	.43	1/4	10-32	.55	.47	.67
33803	1.57	.94	.67	.43	1/4-20	—	.47	—	—
33804	1.57	.94	.67	.43	5/16-18	—	.51	—	—
33805	1.97	1.18	.79	.53	3/8	10-32	.79	.63	.98
33806	1.97	1.18	.79	.53	5/16-18	—	.70	—	—
33807	1.97	1.18	.79	.53	3/8-16	—	.67	—	—
33808	2.36	1.38	.91	.59	3/8	1/4-20	.79	.63	1.18
33809	2.36	1.38	.91	.59	3/8-16	—	.79	—	—
33810	2.36	1.38	.91	.59	1/2-13	—	.79	—	—

Plastic Knurled Knob With Stud
ELESA Original Design

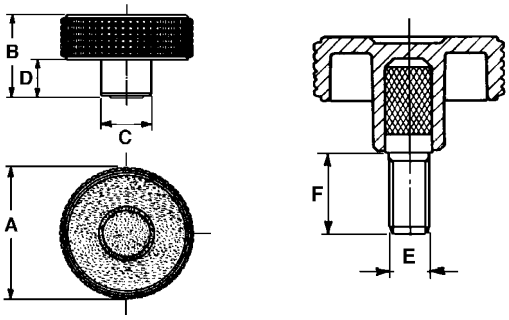

- Material: High Impact Strength Technopolymer
- Finish: Black Matte
- Stud: Zinc Plated Steel with chamfered flat end
- Resistant to Solvents, Oils, Greases, and other Chemical Agents

Part Number	A	B	C	D	E	F
33811	1.22	.87	.59	.35	1/4-20	.500
33812	1.22	.87	.59	.35	1/4-20	.750
33813	1.57	.94	.67	.43	1/4-20	.750
33814	1.57	.94	.67	.43	1/4-20	1.00
33815	1.57	.94	.67	.43	5/16-18	.750
33816	1.57	.94	.67	.43	5/16-18	1.00
33817	1.97	1.18	.79	.53	3/8-16	1.00
33818	1.97	1.18	.79	.53	3/8-16	1.25
33819	2.36	1.38	.91	.59	3/8-16	1.00
33820	2.36	1.38	.91	.59	3/8-16	1.25

Plastic Lobe Knob
ELESA Original Design

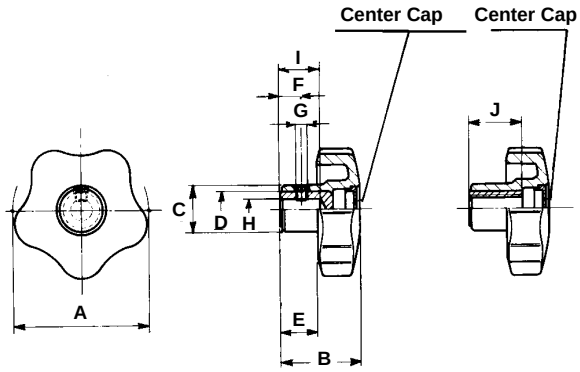

- Material: High Impact Strength Technopolymer
- Finish: Black
- Insert: Brass with tapped or plain blind hole
- Knobs with plain blind hole
- Resistant to Solvents, Oils, Greases, and other Chemical Agents

Part Number	A	B	C	D	E	F	Set Screw G	Mounting Holes (H) Plain	Mounting Holes (H) Tapped	I	J
33840	0.98	0.75	0.51	0.28	0.31	—	—	—	10-32	—	0.39
33841	1.26	0.91	0.59	—	0.39	—	—	—	1/4-20	—	0.47
33842	1.26	0.91	0.59	0.47	0.39	0.2	10-32	1/4	—	—	0.47
33843	1.57	1.06	0.67	—	0.47	—	—	—	1/4-20	—	0.71
33844	1.57	1.06	0.67	—	0.47	—	—	—	5/16-18	—	0.71
33845	1.57	1.06	0.67	0.47	0.47	0.24	10-32	1/4	—	0.55	—
33846	1.57	1.06	0.67	0.55	0.47	0.24	10-32	5/16	—	0.59	—
33847	1.97	1.26	0.75	—	0.55	—	—	—	5/16-18	—	0.79
33848	1.97	1.26	0.75	—	0.55	—	—	—	3/8-16	—	0.79
33849	1.97	1.26	0.75	0.55	0.55	0.28	10-32	5/16	—	0.63	—
33850	1.97	1.26	0.75	0.63	0.55	0.28	10-32	3/8	—	0.63	—
33851	2.48	1.46	0.87	—	0.63	—	—	—	3/8-16	—	1.02
33852	2.48	1.46	0.87	—	0.63	—	—	—	1/2-13	—	1.02
33853*	2.48	1.46	0.87	0.67	0.63	0.31	1/4-20	3/8	—	0.79	—
33854*	2.48	1.46	0.87	0.75	0.63	0.31	1/4-20	1/2	—	0.79	—
33855	2.91	1.71	1.02	0.75	0.87	0.31	1/4-20	1/2	—	0.79	—
33856	2.91	1.71	1.02	—	0.87	—	—	—	1/2-13	—	1.02

*Steel Insert

Plastic Lobe Knob
Metric
Elesa Original Design

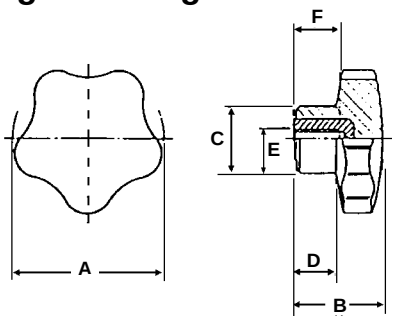

- Material: Duroplast
- Finish: Black Matte
- Insert: Stainless Steel
- Resistant to Solvents, Oils, Greases, and other Chemical Agents

Part Number*	A	B	C	D	E	F
34121	32	23	19	11	M6	12
34122	40	27	21	12	M8	13
34123	50	33	25	14	M10	17
34124	60	37	27	17	M12	20

*Dimensions in millimeters

Plastic Lobe Knob

ELESA Original Design

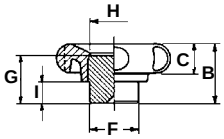

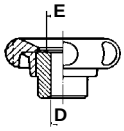

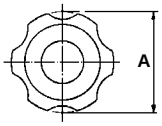

- Material: Black Duroplast
- Finish: Black Bright
- Metal Hub
- Resistant to Solvents, Oils, Greases, and other Chemical Agents

Part Number	A	B	C	D	E	F	G	H	I
33751	2.01	1.14	.51	Blank	—	.79	.83	.71	.39
33752	2.01	1.14	.51	5/16	—	.79	.83	.71	.39
33753	2.01	1.14	.51	5/16-18	—	.79	.83	.71	.39
33755	2.72	1.30	.71	3/8	.71	1.18	.98	1.10	.47
33756	2.72	1.30	.71	3/8-16	.71	1.18	.98	1.10	.47
33758	3.23	1.57	.75	1/2	.71	1.38	1.18	1.34	.59
33759	3.23	1.57	.75	1/2-13	.71	1.38	1.18	1.34	.59
33760	3.90	1.73	.79	Blank	—	1.42	1.34	1.34	.55
33761	3.90	1.73	.79	1/2	.84	1.42	1.34	1.34	.55
33762	3.90	1.73	.79	5/8-11	.84	1.42	1.34	1.34	.55
33763	5.07	1.85	.87	Blank	—	1.57	1.34	1.42	.51
33764	5.07	1.85	.87	1/2	—	1.57	1.34	1.46	.51

Plastic Lobe Knob

ELESA Original Design

- Material: High Impact Strength Technopolymer
- Finish: Black Matte
- Insert: Brass with tapped through hole
- Resistant to Solvents, Oils, Greases, and other Chemical Agents

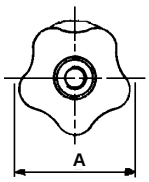

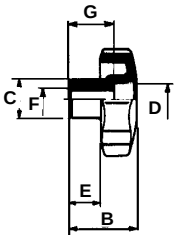

Part Number	A	B	C	D	E	F	G
33831	1.26	0.91	0.59	0.39	0.39	1/4-20	0.47
33832	1.57	1.06	0.67	0.47	0.47	5/16-18	0.71
33833	1.97	1.26	0.75	0.59	0.55	3/8-16	0.79
33834	2.48	1.46	0.87	0.75	0.63	3/8-16	1.02
33835	2.48	1.46	0.87	0.75	0.63	1/2-13	1.02
33836	2.91	1.17	1.02	0.67	0.87	1/2-13	1.02

Plastic Lobe Knob
ELESA Original Design

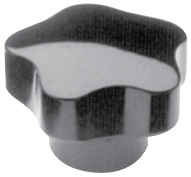

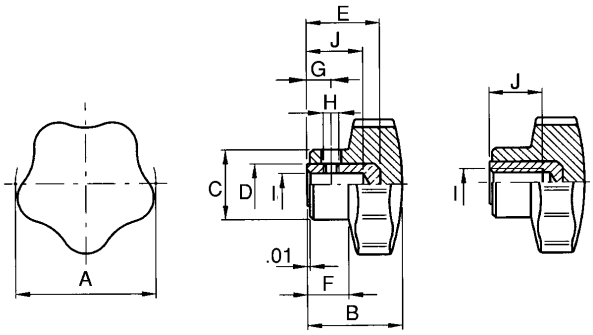

- Material: Phenolic based Duroplast
- Insert: Black oxide steel or Brass

Part Number	A	B	C	D	E	F	Set Screw G	Set Screw H	Mounting Hole (I) Plain	Mounting Hole (I) Tapped	J	Wt. lbs.
33884*	1.26	0.91	0.75	—	—	0.43	—	—	—	1/4-20	0.39	0.04
33885*	1.57	1.06	0.83	—	—	0.47	—	—	—	1/4-20	0.47	0.07
33886*	1.57	1.06	0.83	—	—	0.47	—	—	—	5/16-18	0.51	0.06
33887*	1.57	1.06	0.83	0.47	0.67	0.47	0.28	10-32	0.250	—	0.55	0.07
33888*	1.57	1.06	0.83	0.63	0.79	0.47	0.28	10-32	0.312	—	0.63	0.06
33889*	1.97	1.3	0.98	—	—	0.55	—	—	—	5/16-18	0.71	0.11
33890*	1.97	1.3	0.98	—	—	0.55	—	—	—	3/8-16	0.67	0.10
33891*	1.97	1.3	0.98	0.59	0.99	0.55	0.31	10-32	0.312	—	0.79	0.14
33892*	1.97	1.3	0.98	0.63	0.99	0.55	0.31	10-32	0.375	—	0.79	0.13
33893	2.36	1.46	1.06	—	—	0.67	—	—	—	3/8-16	0.67	0.16
33894	2.36	1.46	1.06	—	—	0.67	—	—	—	1/2-13	0.79	0.17
33895	2.36	1.46	1.06	0.67	1.02	0.67	0.35	1/4-20	0.375	—	0.79	0.21
33896	2.36	1.46	1.06	0.79	1.18	0.67	0.35	1/4-20	0.500	—	0.99	0.19
33897	2.75	1.73	1.18	—	—	0.79	—	—	—	1/2-13	0.79	0.26
33898	2.75	1.73	1.18	0.79	1.18	0.79	0.43	1/4-20	0.500	—	0.99	0.27
33899	3.34	2.16	1.37	—	—	1.18	—	—	—	5/8-11	0.86	0.38

***denotes brass insert.**

Plastic Lobe Knob
ELESA Original Design

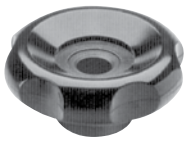

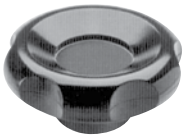

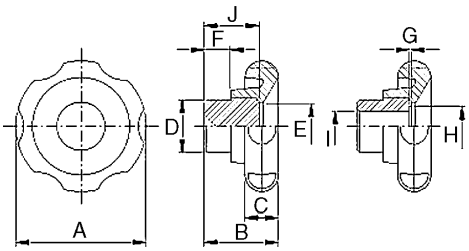

- Materials: Glass reinforced polyamide based technopolymer
- Finish: Black glossy
- Black-oxide steel hub
- Lighter Design
- With plain or tapped hole

1. Not drilled
2. Plain through hole
3. Tapped through hole

Part Number	A	B	C	D	E	F	G	H	Mounting Holes (I) Plain	Mounting Holes (I) Tapped	J	Wt. lbs.
34000[1]	1.97	1.14	0.51	0.79	0.71	0.39	—	—	—	—	0.83	0.16
34001[2]	1.97	1.14	0.51	0.79	0.71	0.39	—	—	0.312	—	0.83	0.14
34002[3]	1.97	1.14	0.51	0.79	0.71	0.39	—	—	—	5/16-18	0.83	0.15
34003[1]	2.40	1.18	0.53	0.98	0.94	0.43	—	—	—	—	0.91	0.28
34004[1]	2.76	1.30	0.71	1.18	1.14	0.47	—	—	—	—	0.98	0.42
34005[2]	2.76	1.30	0.71	1.18	1.14	0.47	0.03	0.71	0.375	—	0.98	0.37
34006[3]	2.76	1.30	0.71	1.18	1.14	0.47	0.03	0.71	—	3/8-16	0.98	0.39
34007[1]	3.15	1.57	0.75	1.38	1.34	0.59	—	—	—	—	1.18	0.66
34008[2]	3.15	1.57	0.75	1.38	1.34	0.59	0.03	0.71	0.500	—	1.18	0.61
34009[3]	3.15	1.57	0.75	1.38	1.34	0.59	0.03	0.71	—	1/2-13	1.18	0.62

Plastic Lobe Knob With Stud
ELESA Original Design

- Material: High Impact Strength Technopolymer
- Finish: Black Matte
- Stud: Zinc Plated Steel with Chamfered Flat End
- Resistant to Solvents, Oils, Greases, and other Chemical Agents

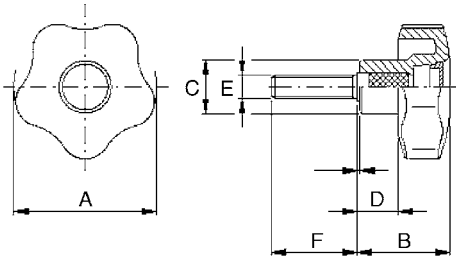

Part Number	A	B	C	D	E	F
33859	0.98	0.75	0.51	0.31	10-32	0.500
33860	0.98	0.75	0.51	0.31	10-32	0.750
33861	1.26	0.91	0.59	0.39	1/4-20	0.500
33862	1.26	0.91	0.59	0.39	1/4-20	0.750
33863	1.26	0.91	0.59	0.39	1/4-20	1.000
33864	1.57	1.06	0.67	0.47	1/4-20	0.500
33865	1.57	1.06	0.67	0.47	1/4-20	1.000
33866	1.57	1.06	0.67	0.47	5/16-18	0.750
33867	1.57	1.06	0.67	0.47	5/16-18	1.000
33868	1.97	1.26	0.75	0.55	5/16-18	1.000
33869	1.97	1.26	0.75	0.55	5/16-18	1.500
33870	1.97	1.26	0.75	0.55	3/8-16	1.000
33871	1.97	1.26	0.75	0.55	3/8-16	1.500
33872	2.48	1.46	0.87	0.63	3/8-16	1.250
33873	2.48	1.46	0.87	0.63	3/8-16	2.000
33874	2.48	1.46	0.87	0.63	1/2-13	1.500
33877	2.91	1.71	1.02	0.87	1/2-13	1.250
33878	2.91	1.71	1.02	0.87	1/2-13	2.000

Plastic Lobe Knob With Stainless Steel Stud
ELESA Original Design

- Material: Duroplast
- Finish: Black Matte
- Stud: Stainless Steel
- Resistant to Solvents, Oils, Greases, and other Chemical Agents

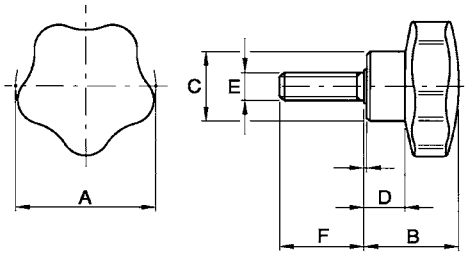

Part Number	A	B	C	D	E	F
34181	1.26	.91	.75	.43	1/4-20	.500
34182	1.26	.91	.75	.43	1/4-20	.750
34183	1.26	.91	.75	.43	1/4-20	1.00
34184	1.57	1.06	.83	.47	5/16-18	.750
34185	1.57	1.06	.83	.47	5/16-18	1.00
34186	1.57	1.06	.83	.47	5/16-18	1.25
34187	1.97	1.30	.98	.55	3/8-16	1.00
34188	1.97	1.30	.98	.55	3/8-16	1.25
34189	1.97	1.30	.98	.55	3/8-16	1.50
34190	1.97	1.30	.98	.55	3/8-16	2.00

Metric

Part Number*	A	B	C	D	E	F
34131	32	23	19	11	M6	16
34132	40	27	21	12	M8	20
34133	40	27	21	12	M8	30
34134	50	33	25	14	M10	20
34135	50	33	25	14	M10	40
34136	60	37	27	17	M12	30

*Dimensions in millimeters

Plastic Fluted Grip Knob
ELESA Original Design

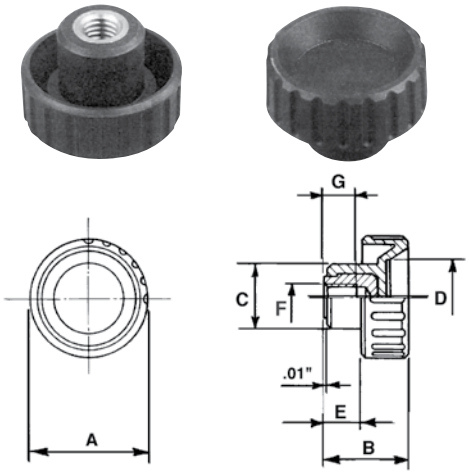

- Material: High Strength Technopolymer
- Finish: Black Matte
- Insert: Brass with tapped blind hole
- Resistant to Solvents, Oils, Greases, and other Chemical Agents

Part Number	A	B	C	D	E	F	G
34200	.79	.63	.47	.43	.24	8-32	.24
34201	.79	.63	.47	.43	.24	10-32	.24
34202	.98	.75	.63	.59	.31	10-32	.39
34203	.98	.75	.63	.59	.31	1/4-20	.31
34204	1.26	.87	.67	.83	.35	1/4-20	.39
34205	1.26	.87	.67	.83	.35	5/16-18	.39

Metric

Part Number*	A	B	C	D	E	F	G
34260	16	13	11	9	5	M4	6
34261	20	16	12	11	6	M5	6
34262	25	19	16	15	8	M6	8
34263	32	22	17	21	9	M8	10

*Dimensions in millimeters

Plastic Fluted Grip Knob With Stud
ELESA Original Design

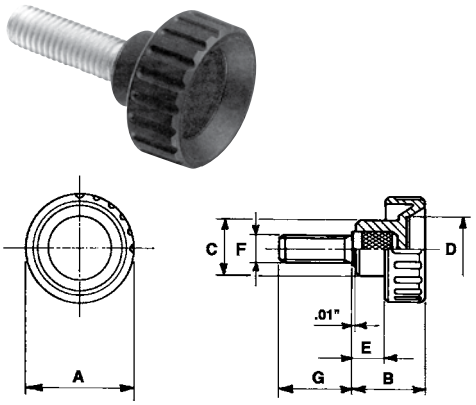

- Material: High Impact Strength Technopolymer
- Finish: Black Matte
- Zinc-Plated Steel Stud With Chamfered Flat End
- Resistant to Solvents, Oils, Greases, and other Chemical Agents

Part Number	A	B	C	D	E	F	G
34210	0.63	0.51	0.43	0.35	0.2	8-32	0.375
34211	0.63	0.51	0.43	0.35	0.2	8-32	0.500
34212	0.79	0.63	0.47	0.43	0.24	8-32	0.500
34213	0.79	0.63	0.47	0.43	0.24	8-32	0.750
34214	0.79	0.63	0.47	0.43	0.24	10-32	0.500
34215	0.79	0.63	0.47	0.43	0.24	10-32	0.750
34216	0.98	0.75	0.63	0.59	0.31	1/4-20	0.500
34217	0.98	0.75	0.63	0.59	0.31	1/4-20	0.750
34218	0.98	0.75	0.63	0.59	0.31	1/4-20	1.000
34219	1.26	0.87	0.67	0.83	0.35	5/16-18	0.750
34220	1.26	0.87	0.67	0.83	0.35	5/16-18	1.000
34221	1.57	1.06	0.75	0.98	0.51	3/8-16	1.000
34222	1.97	1.12	0.87	1.22	0.53	3/8-16	1.000

Metric

Part Number*	A	B	C	D	E	F	G
34250	16	13	11	9	5	M4	10
34251	16	13	11	9	5	M5	10
34252	20	16	12	11	6	M5	16
34253	20	16	12	11	6	M6	16
34254	25	19	16	15	8	M6	16
34255	25	19	16	15	8	M8	16
34256	32	22	17	21	9	M8	16
34257	32	22	17	21	9	M10	20

*Dimensions in millimeters

Knurled Knob
ELESA Orginal Design

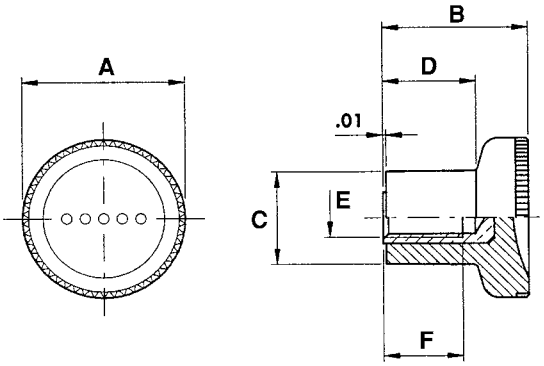

- Material: High Strength Technopolymer
- Finish: Gray/Black Matte
- Insert: Brass With Tapped Blind Hole
- Resistant to Solvents, Oils, Greases, and other Chemical Agents
- Concave surface makes gripping easier.

Part Number	A	B	C	D	E	F
34490	0.83	0.71	0.49	0.41	10-32	0.39
34491	0.98	0.89	0.57	0.55	1/4-20	0.47
34492	1.22	1.06	0.73	0.67	5/16-18	0.63

Knurled Knob With Stud
ELESA Orginal Design

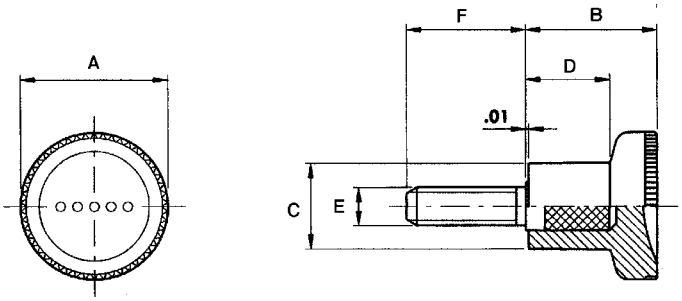

- Material: High Strength Technopolymer
- Finish: Gray/Black Matte
- Stud: Zinc Plated Threaded Steel With Chamfered End
- Resistant to Solvents, Oils, Greases, and other Chemical Agents
- Concave surface makes gripping easier.

Part Number	A	B	C	D	E	F
34493	.83	.71	.49	.41	10-32	.750
34494	.98	.89	.57	.55	1/4-20	.750
34495	1.22	1.06	.73	.67	5/16-18	.750

Plastic Latch Type Lobe Knob
ELESA Original Design

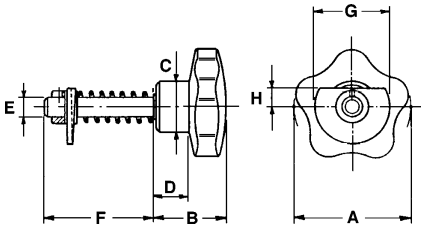

- Material: Black Duroplast
- Finish: Black Bright
- Stud: Zinc Plated Steel
- Resistant to Solvents, Oils, Greases, and other Chemical Agents
- Available in Stainless Steel with left or right swing style

Part Number	A	B	C	D	E	F	G	H	Swing Style
33881	1.97	1.30	.98	.55	.47	1.81	1.77	.47	Left
33882	2.36	1.46	1.06	.67	.47	1.81	1.77	.47	Right

Plastic Knurled Grip Knob
ELESA Original Design

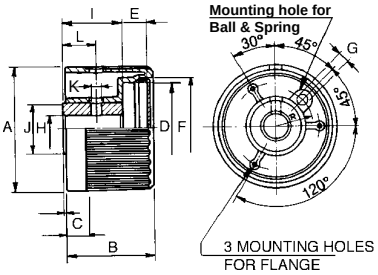

- Material: Glass-Fibre Reinforced Technopolymer
- Finish: Black Bright
- Black Oxide Steel Insert
- Resistant to Solvents, Oils, Greases, and other Chemical Agents

Part Number	A	B	C	D	E	F	G	H	I	J	K	L
33741	1.89	1.38	.31	1.26	.39	1.34	.13	.375	.87	.87	.16	.55
33742	2.05	1.54	.35	1.46	.51	1.54	.17	.500	.87	.87	.16	.55
33743	2.28	1.61	.39	1.65	.43	1.73	.20	.500	1.06	1.02	.20	.63
33744	2.48	1.73	.43	1.89	.39	1.97	.24	.500	1.18	1.02	.20	.63

Plastic T-Handle

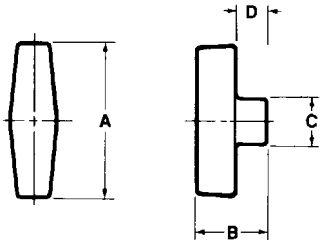

- Material: Polypropylene
- Finish: Tumble
- Insert: Metal
- Also Available With Stud
- Ideal For High Torque Applications
- Textured Grip

Part Number	A	B	C	D	Insert
32126	2 1/2	1 1/4	3/4	5/8	5/16-18 x 3/4

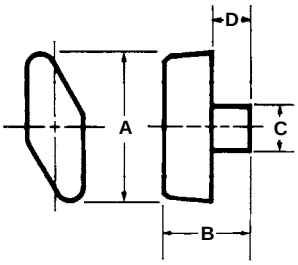

Part Number	A	B	C	D	Insert
32121	2	1 1/8	5/8	1/2	5/16-18 x 5/8

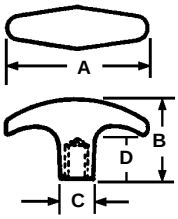

- Material: Plastic
- Finish: Tumble
- For heavy-duty clamping and push/pull applications; latch release with pull cables or rods; also for cabinet doors, access panel latches, etc.

Part Number	Insert Thread and Depth	A	B	C	D
32115	5/16-18 x 7/16	2 1/4	1 1/4	9/16	11/16
32116	1/4-20 x 7/16	2 1/4	1 1/4	9/16	11/16

Plastic T-Handle
ELESA Original Design

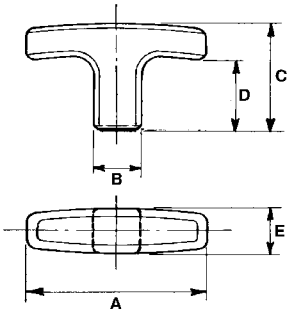

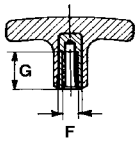

- Material: Glass-Fibre Reinforced Technopolymer
- Finish: Black Matte
- Insert: Brass With Tapped Blind Hole
- Resistant to Solvents, Oils, Greases, and other Chemical Agents

Part Number	A	B	C	D	E	F	G	Ft.* lbs.
33711	1.57	0.51	1.18	0.79	0.51	1/4-20	0.63	560
33712	2.17	0.55	1.3	0.87	0.55	1/4-20	0.71	739
33713	2.64	0.63	1.46	0.98	0.63	5/16-18	0.79	1,008
33714	3.15	0.79	1.61	1.02	0.79	3/8-16	0.79	1,568
33715	3.66	0.83	1.77	1.12	0.83	1/2-13	0.79	1,795

*Max. Tensile strength / Pull Force

Plastic Tapered Knob

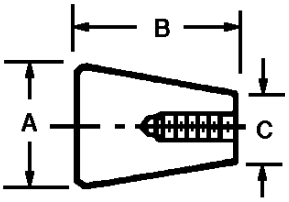

- Tapered shanks, enlarged heads provide good finger clearance and excellent grasp for pulling
- Popular Applications: push-pull rods, palm switch knobs, palm grasp knobs (for portable power tools), push buttons, drawer pulls, etc.

- Material: Plastic
- Finish: Tumble
- Insert: Brass
- 3D Solid Models are available in multiple formats from www.jergensinc.com

Part Number	A	B	C	Insert Thread and Depth
32213	1	1 1/4	1/2	1/4-20 x 7/16
32214	1	1 1/4	1/2	5/16-18 x 7/16

Plastic Lift Knob

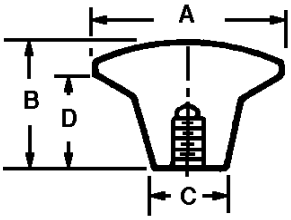

- Material: Plastic
- Finish: Tumble
- Insert: Brass
- 3D Solid Models are available in multiple formats from www.jergensinc.com

Part Number	A	B	C	D	Insert Thread and Depth
32217	1 3/8	7/8	5/8	5/8	1/4-20 x 7/16

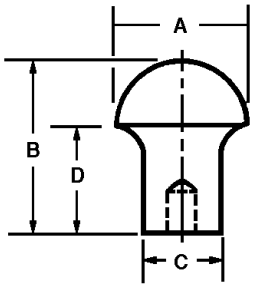

Part Number	A	B	C	D	Insert Thread and Depth
32215	1	1 3/16	9/16	11/16	10-32 x 5/16
32216	1	1 3/16	9/16	11/16	1/4-20 x 7/16

Jergens offers 3D models

for all handles, knobs and handwheels at www.jergensinc.com

Plastic Oval Tapered Knob

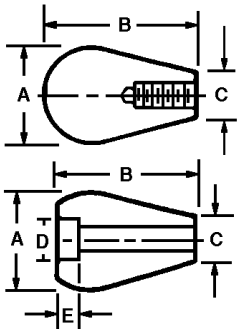

- Material: Polypropylene
- Finish: Tumble
- For shift levers, control levers, push/pull rods on machine tools, lawn and garden equipment, jigs and fixtures, and for finger tip levers or lid knobs.
- Available with either brass insert, tapped plastic thread, or untapped through hole.
- Sand and Buff Finish available upon request
- 3D Solid Models are available in multiple formats from www.jergensinc.com

Part Number	A	B	C	D	E	Hole Diameter
32211*	1 3/16	1 7/8	9/16	—	—	5/16-18 x 3/4
32218**	1 3/16	1 7/8	9/16	—	—	1/4-20 x 7/16
32212	1 3/16	1 3/4	9/16	9/16	5/16	.380/.385 through hole (untapped)
32219	1 3/16	1 3/4	9/16	9/16	5/16	.313/.318 through hole (untapped)

*Tapped plastic threads
**Brass insert

Soft Touch Oval Tapered Knob

- Material: Soft Touch Plastic
- Finish: “Soft Feel” Black Matte
- Insert: Brass
- Cushioned vinyl covering helps to dampen vibrations
- Also available in red, blue, yellow, and green (250 piece minimum)

This Oval Tapered Knob has the original soft touch material that helps in gripping. It is designed with an enlarged head and tapered shaft for maximum push, pull, and turning.

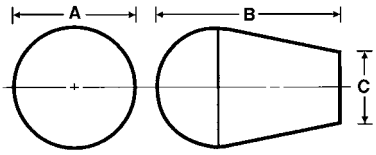

Part Number	A	B	C	Hole Diameter
32150	1 5/8	2 1/2	7/8	5/16-18 x 5/8
32151	1 5/8	2 1/2	7/8	5/16
32152	1 5/8	2 1/2	7/8	3/8-16 x 5/8
32153	1 5/8	2 1/2	7/8	3/8

Soft Touch Tapered Knob

- Material: Soft Touch Plastic
- Finish: Black Matte
- Insert: Brass
- Cushioned vinyl covering helps to dampen vibrations
- Also available in red, blue, yellow, and green (250 piece minimum)

This Oval Tapered Knob has the original soft touch material that helps in gripping. It is designed with an enlarged head and tapered shaft for maximum push, pull, and turning.

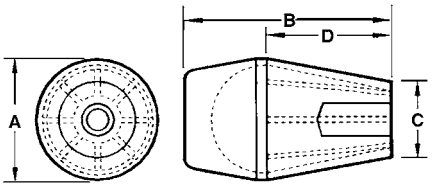

Part Number	A	B	C	D	Hole Diameter
32160	1 1/2	2 1/2	15/16	1 1/2	1/4-20 x 5/8
32161	1 1/2	2 1/2	15/16	1 1/2	5/16-18 x 3/4
32162	1 1/2	2 1/2	15/16	1 1/2	3/8-16 x 5/8

Soft Touch Tapered Knob

- Material: Soft Touch Plastic
- Finish: Black Matte
- Insert: Brass
- Cushioned vinyl covering helps to dampen vibrations
- Also available in red, blue, yellow, and green (250 piece minimum)
- A standard 1" stud is available, other lengths available upon request.

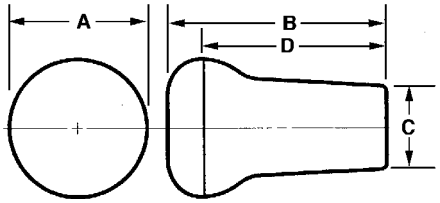

Part Number	A	B	C	D	Hole Diameter
32180	1 5/8	2 1/2	7/8	2 1/8	1/4-20 x 5/8
32181*	1 5/8	2 1/2	7/8	2 1/8	1/4 x 1
32182	1 5/8	2 1/2	7/8	2 1/8	5/16-18 x 5/8
32183*	1 5/8	2 1/2	7/8	2 1/8	5/16 x 1
32184*	1 5/8	2 1/2	7/8	2 1/8	3/8 x 1
32170	1 3/8	2 1/8	13/16	1 3/4	5/16-18 x 5/8
32171	1 3/8	2 1/8	13/16	1 3/4	3/8-16 x 5/8
32172*	1 3/8	2 1/8	13/16	1 3/4	3/8 x 1
32173	1 3/8	2 1/8	13/16	1 3/4	1/2-13 x 5/8
32174*	1 3/8	2 1/8	13/16	1 3/4	1/2 x 1

*Cored Hole

Plastic Push/Pull Knob

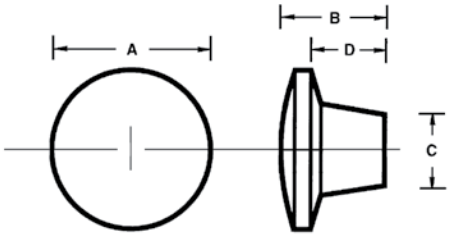

- Material: Thermoplastic
- Finish: Matte
- Insert: Brass
- Also available with stud

Part Number	A	B	C	D	Insert
32225	1 3/8	7/8	5/8	5/8	8-32
32226	1 3/8	7/8	5/8	5/8	10-32
32227	1 3/8	7/8	5/8	5/8	1/4-20
32228	1 3/8	7/8	5/8	5/8	5/16-18
32229	1 3/8	7/8	5/8	5/8	3/8-16

Plastic Push/Pull Knob

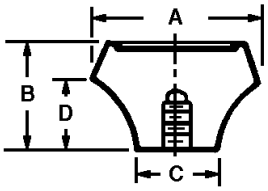

- Material: Plastic
- Finish: Tumbled
- Insert: Brass
- 3D Solid Models are available in multiple formats from www.jergensinc.com

Part Number	A	B	C	D	Insert Thread and Depth
32220	1	11/16	1/2	7/16	8-32 x 5/16
32221	1	11/16	1/2	7/16	10-32 x 5/16
32222	1	11/16	1/2	7/16	1/4-20 x 7/16
32223	1	15/16	9/16	11/16	10-32 x 7/16
32224	1	15/16	9/16	11/16	1/4-20 x 7/16

Plastic Three-Spoked Knob
ELESA Original Design

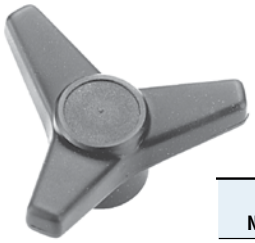

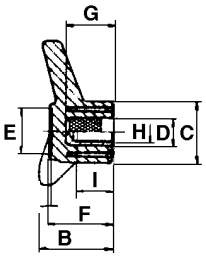

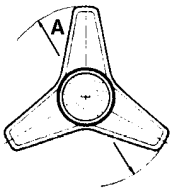

- Material: Glass-Fibre Reinforced Technopolymer
- Finish: Black Matte
- Brass Insert with tapped blind hole
- Insert: Brass or Steel with plain blind hole
- Resistant to Solvents, Oils, Greases, and other Chemical Agents

Part Number	A	B	C	D	E	F	G	H	I	Insert
33731	2.48	1.10	1.02	—	.70	.98	—	5/16-18	.62	Brass
33732	2.48	1.10	1.02	.59	.70	.98	.87	5/16	.62	Steel
33733	3.14	1.37	1.25	—	.82	1.18	—	3/8-16	.67	Brass
33734	3.14	1.37	1.25	.59	.82	1.18	.98	3/8	.79	Steel
33735	3.93	1.65	1.41	—	.98	1.41	—	1/2-13	.79	Brass
33736	3.93	1.65	1.41	.94	.98	1.41	1.29	1/2	.98	Steel

Handles, Levers & Cranks

Adjustable Handle 135
Adjustable Handle With Stud 135
Aluminum Balanced Crank Handle 128
Aluminum Revolving and Solid Handle 120
Aluminum Tubular Handle 142
Aluminum & Malleable Clamping Levers 131
Aluminum & Malleable Offset Handle 130
Aluminum & Malleable Speed Handle 127
Back Mounted Bridge Handle 140
Balanced Crank Handle 128
Control Lever 139
Double Handle Locking Lever 131
Ergonomic Style Steel Handles 121
Fold-Away Handle 125
Forged Crank Handle 129
Front Mounted Bridge Handle 140
Handle With Steel Shank 122
Machine Guard Handles 139
Metal Adjustable Handles 132–134
Plastic Adjustable Handle With Stainless Steel Stud 137
Plastic Button Head Tapped Adjustable Handle 136, 138
Plastic Button Head Adjustable Handle With Stud 136, 138
Plastic Button Head Adjustable Tapped Handle With Stainless Steel Insert 137
Plastic Crank With Revolving Fold-Away Handle 126
Plastic Crank With Revolving Handle 126
Plastic Folding Handle 120
Plastic Fixed Handle 120
Plastic Handle 141
Plastic Heavy Duty Tapered Handle 124
Plastic Light Duty Tapered Handle 124
Plastic Pull/Lift Handle 142
Plastic Revolving Fold-Away Handle 125
Plastic Revolving Heavy Duty Handle With Steel Shank 122
Plastic Revolving Handle With Steel Through Shank 122
Plastic Revolving Handle With Steel Shank 123
Revolving Handle 123
Single Handle Locking Lever 130
Steel Clamp Lever 129
Steel Solid and Revolving Balanced Crank Handle 128

Jergens®
MANUFACTURING EFFICIENCY

Jergens
SPECIALTY FASTENERS GROUP

Aluminum Revolving and Solid Handle

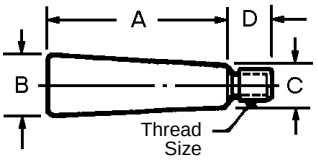

- Material: Handle, 2024 Aluminum
  Stem, Low Carbon Steel
- Finish: Revolving Handle, Clear or Black Anodize
  Stem for Revolving Handle, Zinc Plate
  Solid Handle, Plain
- 3D Solid Models are available in multiple formats from www.jergensinc.com

Aluminum Revolving Handles

Part Number		A	B	C	D	Thread Size	Wt. (lbs)
Clear	Black						
21901	**21911**	1 1/8	7/16	3/8	3/8	10-24	.02
21902	**21912**	1 9/16	5/8	1/2	7/16	1/4-20	.03
21903	**21913**	2	7/8	9/16	1/2	5/16-18	.08
21904	**21914**	2 1/2	1	3/4	1/2	3/8-16	.19
21905	**21915**	2 7/8	1 1/8	15/16	1/2	1/2-13	.23
21906	**21916**	3 1/4	1 1/4	15/16	1/2	1/2-13	.39

Solid Handles

Part Number	Wt. (lbs)
—	—
10301	.03
10302	.10
10303	.15
—	—
10304	.31

Metric

Clear	Black	A	B	C	D	Thread Size
Part Number*						
21951	**21961**	28	11	9	9	M5
21952	**21962**	39	16	13	11	M6
21953	**21963**	50	22	14	13	M8
21954	**21964**	63	25	19	13	M10
21955	**21965**	72	28	23	13	M12
21956	**21966**	82	31	23	13	M12

*Dimensions in millimeters

- Material: Handles: 2024 Aluminum
  Stem: Low Carbon Steel
- Finish: Clear or Black Anodize
  Stem: Zinc Plate
- Thread: Class 6g

Plastic Folding Handle

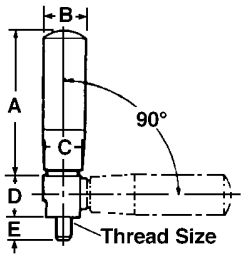

- Material: Handle, 6-6 Nylon Stem, Steel
- Finish: Handle, Black Stem, Chrome Plated
- Folds out of the way
- 3D Solid Models are available in multiple formats from www.jergensinc.com

Part Number	A	B	C	D	E	Thread Size
34070	2 1/4	25/32	25/32	7/8	1/2	M8 x 1.25
34071	3	25/32	25/32	7/8	9/16	M10 x 1.50

Plastic Fixed Handle

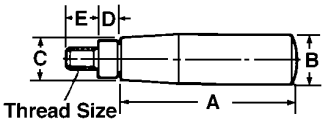

- Material: Handle, 6-6 Nylon Stem, Steel
- Finish: Handle, Black Stem, Chrome Plated
- 3D Solid Models are available in multiple formats from www.jergensinc.com

Part Number	A	B	C	D	E	Thread Size
34075	2 9/32	5/8	9/16	5/16	1/2	M8 x 1.25
34076	2 15/32	7/8	11/16	23/32	9/16	M10 x 1.50

Ergonomic Style Steel Handles

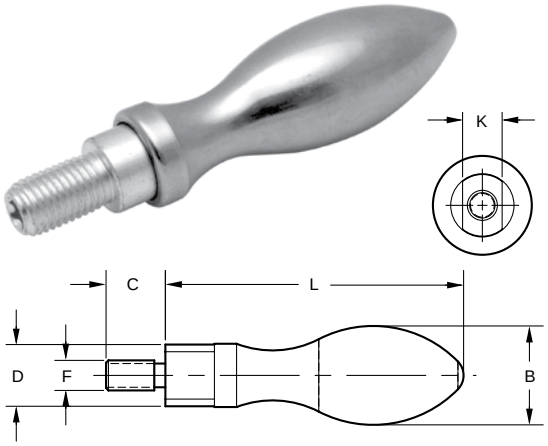

Revolving Handle

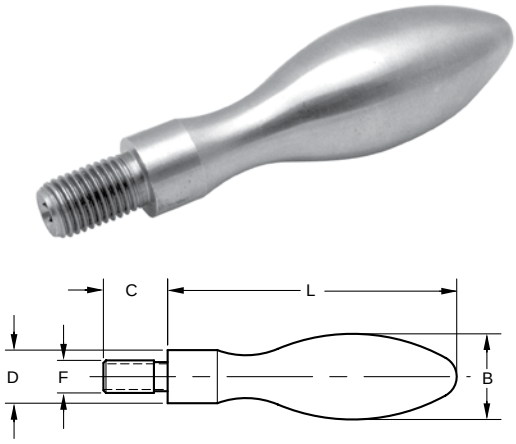

Fixed Handle

Part Number	Style	F (Thread)	B	C	D	L	K
22000	Revolving	10 - 24	1/2	3/8	0.32	1-7/8	1/4
22001	Revolving	1/4 - 20	5/8	1/2	0.40	2-1/4	5/16
22002	Revolving	5/16 - 18	13/16	9/16	0.51	2-13/16	3/8
22003	Revolving	3/8 - 16	1	11/16	0.63	3-3/8	7/16
22011	Fixed	10 - 24	1/2	3/8	0.32	1-11/16	—
22012	Fixed	1/4 - 20	5/8	1/2	0.40	2	—
22013	Fixed	5/16 - 18	13/16	9/16	0.51	2-5/8	—
22014	Fixed	3/8 - 16	1	11/16	0.63	3-3/16	—

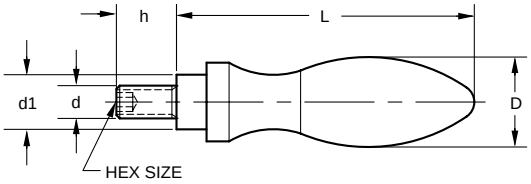

Metric Revolving Style

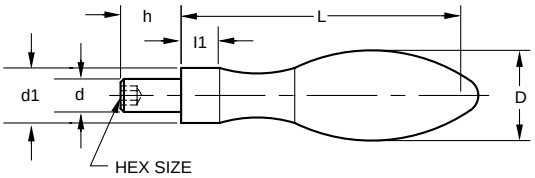

Metric Fixed Style

Metric

Part Number*	Style	d (Thread)	L	D	d1	h	l
22050	Revolving	M6	54.5	16	10	11	5.5
22051	Revolving	M8	67	20	13	13	6
22052	Revolving	M10	83	25	16	14	8
22053	Revolving	M12	105.5	32	20	21	10.5
22054	Revolving	M16	117	36	22	26	11
22055	Fixed	M6	54	16	10	11	7
22056	Fixed	M8	64	20	13	13	8
22057	Fixed	M10	80	25	16	14	10
22058	Fixed	M12	100	32	20	21	13
22059	Fixed	M16	112	36	22	26	14

*Dimensions in millimeters

Plastic Revolving Heavy Duty Handle With Steel Shank
ELESA Original Design

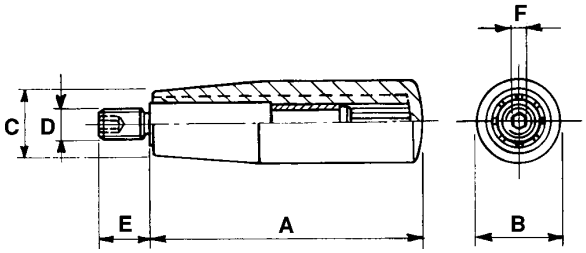

- Material: Black Duroplast
- Finish: Black Bright
- Shank: Zinc Plated Steel or Stainless Steel 303
- Resistant to Solvents, Oils, Greases, and other Chemical Agents

With Steel Shank

Part Number	A	B	C	D*	E	F
33621	1.57	.71	.59	M6	.51	.12
33622	1.97	.83	.67	M6	.51	.12
33624	2.56	.91	.75	M8	.59	.16
33625	3.15	1.02	.83	M10	.67	.20
33626	3.54	1.10	.87	M10	.67	.20

*Dimension in millimeters

With Stainless Steel Shank

Part Number	A	B	C	D*	E	F
34101	1.57	.71	.59	M6	.51	.12
34102	1.97	.83	.67	M6	.51	.12
34103	2.56	.91	.75	M8	.59	.16
34104	3.15	1.02	.83	M10	.67	.20
34105	3.54	1.10	.87	M10	.67	.20

*Dimension in millimeters

Plastic Revolving Handle With Steel Through Shank
ELESA Original Design

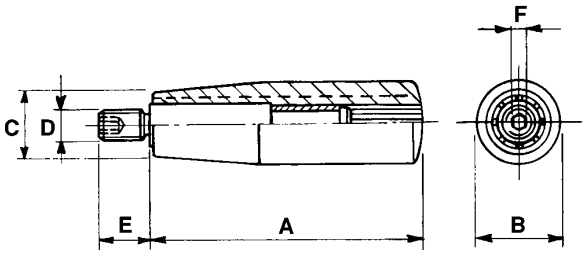

- Material: Black Duroplast
- Finish: Black Bright
- Shank: Matte Chrome Plated Steel
- Resistant to Solvents, Oils, Greases, and other Chemical Agents

Part Number	A	B	C	D	E	F
33601	1.57	.71	.59	1/4-20	.51	5/32
33602	1.97	.83	.67	5/16-18	.59	3/16
33604	2.56	.91	.75	5/16-18	.67	1/4
33605	3.15	1.02	.83	3/8-16	.71	1/4
33606	3.54	1.10	.87	3/8-16	.71	5/16

Plastic Revolving Handle With Steel Shank
ELESA Original Design

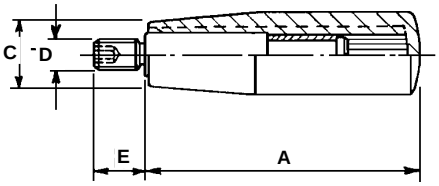

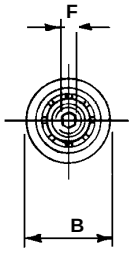

- Material: High Impact Strength Technopolymer
- Finish: Black Matte
- Shank: Zinc Plated Steel
- Resistant to Solvents, Oils, Greases, and other Chemical Agents

Part Number	A	B	C	D*	E	F
33611	1.57	.71	.59	M6	.51	.12
33612	1.97	.83	.67	M6	.51	.12
33613	2.20	.87	.71	M6	.51	.12
33614	2.56	.91	.75	M8	.59	.16
33615	3.15	1.02	.83	M8	.59	.16
33616	3.54	1.10	.87	M10	.67	.20

*Dimension in millimeters

Revolving Handle
ELESA Orginal Design

- Material: High Impact Strength Technopolymer
- Finish: Gray/Black Matte
- Stud: Zinc Plated Steel
- Resistant to Solvents, Oils, Greases, and other Chemical Agents

Part Number	A	B	C	D	E*	F	G
34471	2.56	.81	.59	.73	M6	.51	.12
34472	2.87	.87	.63	.75	M8	.59	.16
34473	3.39	.96	.69	.94	M8	.59	.16
34474	3.39	.96	.69	.94	M10	.67	.20
34475	3.74	1.04	.71	.98	M10	.67	.20

*Dimension in millimeters

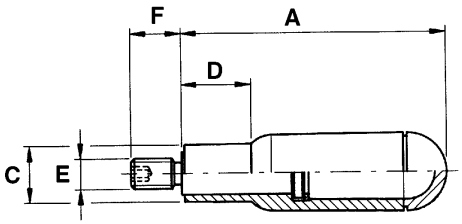

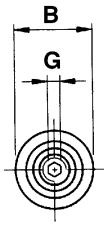

Plastic Heavy Duty Tapered Handle

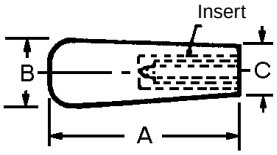

- Use as grasp handles on portable tools or as machine shift levers
- Inserts: Brass
- 3D Solid Models are available in multiple formats from www.jergensinc.com

With Tapped Holes

Part Number	A	B	C	Insert Thread and Depth
32105	4 1/2	1 3/8	1	3/8-16 x 5/8
32106	4 1/2	1 3/8	1	3/8-24 x 5/8
32101	4 1/2	1 3/8	1	3/8-16 x 2
32107	4 1/2	1 3/8	1	1/2-13 x 5/8
32108	4 1/2	1 3/8	1	1/2-20 x 5/8
32103	4 1/2	1 3/8	1	1/2-13 x 1 1/4
32104	4 1/2	1 3/8	1	5/8-18 x 3/4

Plastic Light Duty Tapered Handle

- Use as grasp handles on small tools, utensils, and gauges
- Inserts: Brass
- Through hole style for use with a socket head cap screw
- 3D Solid Models are available in multiple formats from www.jergensinc.com

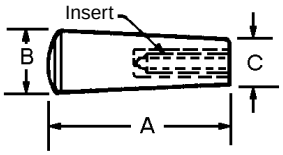

With Tapped Holes

Part Number	A	B	C	Insert Thread and Depth
32111	2 5/8	1	5/8	1/4-20 x 7/16
32112	2 5/8	1	5/8	5/16-18 x 7/16
32117	2 5/8	1	5/8	3/8-16 x 1/2
32118	3 7/8	1 1/8	3/4	1/4-20 x 1/2
32119	3 7/8	1 1/8	3/4	5/16-18 x 7/16
32109	3 7/8	1 1/8	3/4	3/8-16 x 5/8
32102	3 7/8	1 1/8	3/4	3/8-16 x 2
32110*	3 7/8	1 1/8	3/4	.500/.510 x 2

* Cored Hole

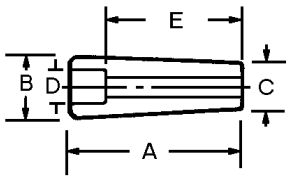

With Through Hole

Part Number	A	B	C	D	E	Through Hole Size
32113	2 9/16	1	5/8	1/2	5/8	.251/.256
32114	3 11/16	1 1/8	3/4	3/4	2 5/8	.380/.385

Fold-Away Handle
ELESA Orginal Design

- Material: High Impact Strength Technopolymer
- Finish: Gray/Black Matte
- Base: Sintered and Oxidized
- Resistant to Solvents, Oils, Greases, and other Chemical Agents

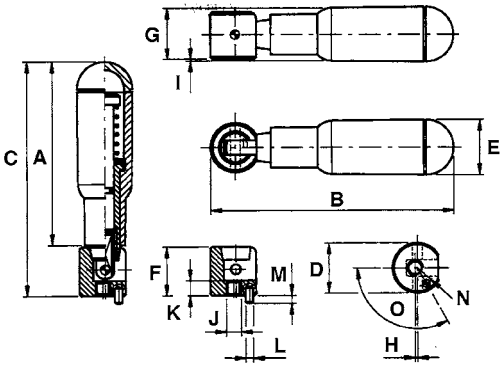

Part Number	A	B	C	D	E	F	G	H	I	J	K	L	M	N	O
34481	2.56	3.27	3.17	.63	.81	.59	.75	.04	.06	M4	.20	.12	.12	.22	90°
34482	2.87	3.58	3.48	.63	.87	.59	.77	.04	.10	M4	.20	.12	.12	.22	90°
34483	2.87	3.82	3.66	.79	.87	.77	.85	.02	.02	M6	.24	.12	.12	.22	120°
34484	3.39	4.33	4.17	.79	.96	.77	.91	.02	.06	M6	.24	.12	.12	.28	120°
34485	3.74	4.69	4.53	.79	1.04	.77	.94	.02	.10	M6	.24	.12	.12	.28	120°

Plastic Revolving Fold-Away Handle
ELESA Original Design

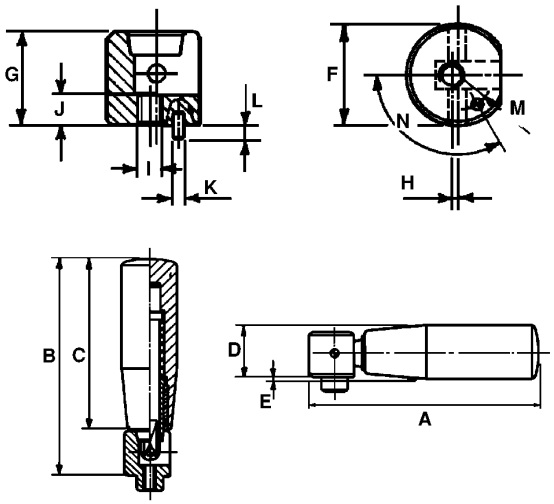

- Material: High Impact Strength Technopolymer
- Finish: Black Matte
- Stud: Black Oxide Steel Double Guide
- Resistant to Solvents, Oils, Greases, and other Chemical Agents

Part Number	A	B	C	D	E	F	G	H	I	J	K	L	M	N
33631	2.91	2.80	2.20	.75	.10	.63	.59	.04	M4	.20	.12	.12	.22	90°
33632	3.27	3.15	2.56	.79	.12	.63	.59	.04	M4	.20	.12	.12	.22	90°
33633	3.50	3.35	2.56	.87	.04	.79	.77	.02	M6	.24	.12	.12	.28	120°
33634	4.09	3.94	3.15	.94	.10	.79	.77	.02	M6	.24	.12	.12	.28	120°
33635	4.49	4.33	3.54	.94	.12	.79	.77	.02	M6	.24	.12	.12	.28	120°
33636	4.65	4.45	3.54	1.06	.04	1.02	.91	.06	M6	.28	.12	.12	.37	90°

Plastic Crank With Revolving Handle
ELESA Original Design

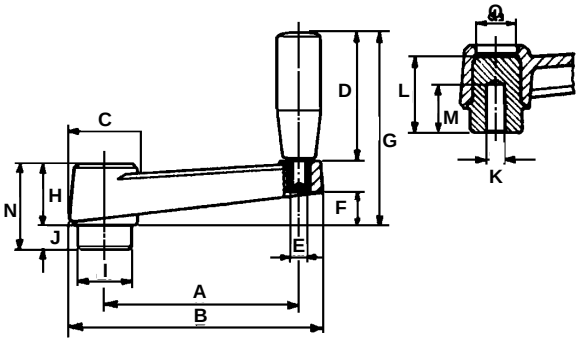

- Material: Glass-Fibre Reinforced Technopolymer
- Finish: Black Matte
- Ribbed Structure for heavy duty applications
- Hub: Black Oxide Steel
- Resistant to Solvents, Oils, Greases, and other Chemical Agents
- Available in Ergostyle®. See Ergostyle Section.
- 3D Solid Models are available in multiple formats from www.jergensinc.com

Part Number	A	B	C	D	E*	F	G	H	I	J	K	L	M	N	O
33651	2.52	3.39	1.06	1.57	M6	.39	2.48	.91	.71	.39	.236	1.14	.71	1.30	.63
33652	3.15	4.13	1.18	1.97	M6	.51	2.99	1.02	.87	.39	.236	1.26	1.02	1.42	.67
33653	3.94	5.04	1.34	2.56	M8	.59	3.78	1.18	.94	.39	.315	1.46	1.10	1.57	.83
33654	5.11	6.37	1.57	3.15	M8	.79	4.52	1.37	1.10	.55	.394	1.73	1.18	1.93	.98
33655	6.30	7.80	1.77	3.54	M10	.91	5.12	1.57	1.34	.59	.394	1.93	1.18	2.17	1.06
33656	8.35	8.92	1.97	3.54	M10	1.02	5.35	1.77	1.57	.59	.472	2.09	1.18	2.36	1.22

*Dimension in millimeters

Plastic Crank With Revolving Fold-Away Handle
ELESA Original Design

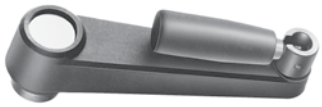

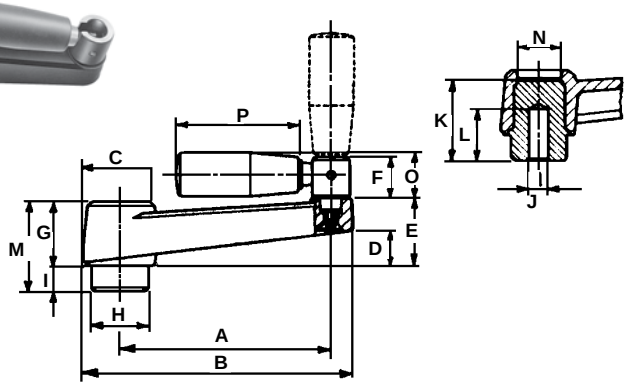

- Material: Glass-Fibre Reinforced Technopolymer
- Finish: Black Matte
- Ribbed Structure for heavy duty applications
- Hub: Black Oxide Steel
- Resistant to Solvents, Oils, Greases, and other Chemical Agents
- 3D Solid Models are available in multiple formats from www.jergensinc.com

Part Number	A	B	C	D	E	F	G	H	I	J	K	L	M	N	O	P
33662	3.15	4.13	1.18	.51	1.06	.59	1.02	.87	.39	.236	1.26	1.02	1.42	.67	.74	2.20
33663	3.94	5.04	1.34	.59	1.22	.79	1.18	.94	.39	.315	1.46	1.10	1.57	.83	.86	2.56
33664	5.11	6.37	1.57	.78	1.37	.79	1.37	1.10	.55	.394	1.73	1.18	1.93	.98	.86	2.56
33665	6.30	7.80	1.77	.91	1.57	.79	1.57	1.34	.59	.394	1.93	1.18	2.17	1.06	.94	3.15
33666	8.35	8.92	1.97	1.02	1.81	.91	1.77	1.57	.59	.472	2.09	1.18	2.36	1.22	1.06	3.54

Aluminum & Malleable Speed Handle

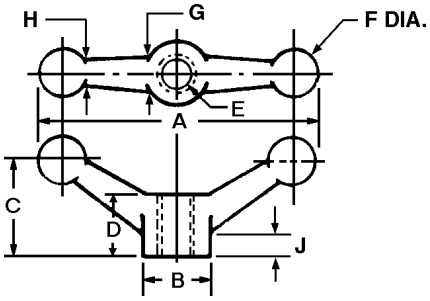

- Material: 319 Aluminum
  Malleable ASTM A47, GR32510
- Finish: Mill
- Thread: 2B-UNC or class 6h
- Can be used with rod ends for clamping tank covers, locking lids or any fast spin locking application
- With or without tapped or blank hole
- Three head widths
- 3D Solid Models are available in multiple formats from www.jergensinc.com
- "D" dimension is based on machined castings. It may be slightly greater on blanks.

Part Number							Dia			
Aluminum	Malleable	A	B	C	D	E	F	G	H	J
39901	**40301**	4 1/2	1 1/8	1 1/2	1	Blank	11/16	3/4	7/16	1/2
39902	**40302**	4 1/2	1 1/8	1 1/2	1	3/8-16	11/16	3/4	7/16	1/2
39903	**40303**	4 1/2	1 1/8	1 1/2	1	1/2-13	11/16	3/4	7/16	1/2
39904	**40304**	6	1 1/2	2 1/8	1 1/2	Blank	.94	7/8	5/8	3/4
39905	**40305**	6	1 1/2	2 1/8	1 1/2	1/2-13	.94	7/8	5/8	3/4
39906	**40306**	6	1 1/2	2 1/8	1 1/2	5/8-11	.94	7/8	5/8	3/4
39907	**40307**	8 3/4	2	3	2	Blank	1 3/16	1.02	7/8	.94
—	**40308**	8 3/4	2	3	2	3/4-10	1 3/16	1.02	7/8	.94

Part Number							Dia			
Aluminum	Malleable	A	B	C	D	E*	F	G	H	J
39901	**40301**	113	28	38	25	Blank	17	19	11	13
39952	**40352**	113	28	38	25	M10	17	19	11	13
39953	**40353**	113	28	38	25	M12	17	19	11	13
39904	**40304**	150	38	53	38	Blank	24	22	16	19
39955	**40355**	150	38	53	38	M12	24	22	16	19
39956	**40356**	150	38	53	38	M16	24	22	16	19
39907	**40307**	219	50	75	50	Blank	30	26	22	24
—	**40358**	222	50	75	50	M20	30	26	22	24

*Dimension in millimeters

Steel Solid and Revolving Balanced Crank Handle

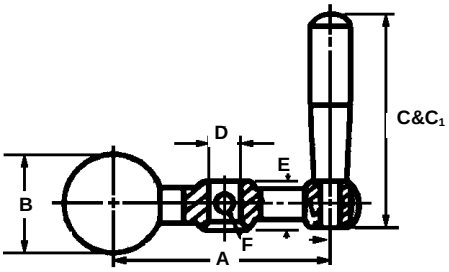

SOLID HANDLE DOES NOT REVOLVE

- Material: Steel
- Finish: Bright Chrome
- 3D Solid Models are available in multiple formats from www.jergensinc.com
- Revolving Handle is a replacement set for Bridgeport Style Mills

Part Number						Reamed		Center Hole*
Solid	Revolving	A	B	C	C_1†	D	E	F
11401	—	2	13/16	2	—	5/16	7/16	1/8
11402	**11412**	2 1/2	1	2 1/2	2 3/4	5/16	9/16	1/8
11403	**11413**	3 1/8	1 1/4	3 1/4	3 1/2	3/8	11/16	5/32
11404	**11414**	4	1 1/4	3 1/4	3 1/2	3/8	11/16	5/32
11405	**11415**	5	1 1/2	4	4 3/16	1/2	7/8	3/16
11406	—	6 1/8	1 1/2	4	—	1/2	7/8	3/16

* Center Hole is cross drilled on one side.

† Dimension for Revolving Style

Aluminum Balanced Crank Handle

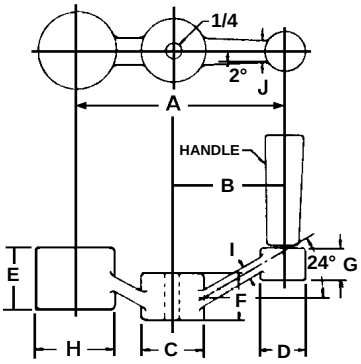

Jergens Aluminum Balanced Crank Handles are good replacements for heavier steel handles. The light-weight characteristics make table positioning easier as no fall-off occurs after position has been established. Light-weight Aluminum Balanced Crank Handles are ideal for applications such as optical jig boring equipment and inspection instruments.

- Material: 319 Aluminum Alloy
- Finish: Grey Enamel
- 3D Solid Models are available in multiple formats from www.jergensinc.com

Part Number	A	B	C	D	E	F	G	H	I	J	Handle	Wt. (lbs)
11301	2 5/16	1 1/4	3/4	1/2	11/16	1/2	7/16	7/8	3/16	5/16	21902	.14
11302	3 1/16	1 11/16	1	5/8	7/8	5/8	1/2	1 1/4	1/4	3/8	21903	.30
11303	3 15/16	2 1/8	1 1/8	3/4	1 3/16	3/4	5/8	1 3/8	5/16	7/16	21904	.54
11304	4 11/16	2 9/16	1 3/8	7/8	1 5/16	1	3/4	1 5/8	5/16	1/2	21905	.75
11305	5 11/16	3 1/16	1 3/8	7/8	1 1/2	1	1	1 3/4	3/8	9/16	21905	.90

Forged Crank Handle

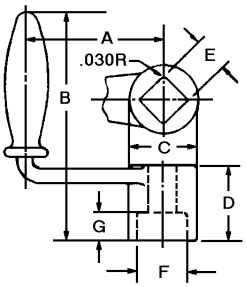

- Material: C-1021 Forging
- Finish: Mill
- 3D Solid Models are available in multiple formats from www.jergensinc.com

Blank Crank Handles

Part Number	A	B	C	D	Wt. (lbs)
20501	2 1/2	3 3/4	1	1/4	.60
20503	3	4 1/4	1 1/4	1 1/2	.97
20504	3 1/2	4 3/16	1 1/16	1 5/16	.90
20505	4	4 1/2	1 1/4	1 3/8	1.14
20506	5	4 15/16	1 1/4	1 13/16	1.62
20507	6	5 1/16	1 1/4	1 15/16	1.62
20508	7	5 7/16	1 3/8	2 1/16	1.95
20509	8	6 1/16	1 9/16	2 7/16	3.00
20510	9 1/8	6 1/4	1 1/2	2 1/2	3.25
20511	10	7	1 3/4	3	4.37

Finished Crank Handles

Part Number	E	F	G	Wt. (lbs)
20301	1/2 Sq.	3/4	3/16	.50
20303	9/16 Sq.	3/4	1/4	.82
20304	1/2 Sq.	11/16	1/4	.74
20305	9/16 Sq.	3/4	5/16	.97
20306	5/8 Sq.	7/8	3/8	1.37
20307	11/16 Sq.	15/16	3/8	1.25
20308	3/4 Sq.	1 1/16	1/2	1.67
20309	7/8 Sq.	1 1/4	1/2	2.44
20310	7/8 Sq.	1 1/4	1/2	2.60
20311	1 Sq.	1 3/8	9/16	3.62

Steel Clamp Lever

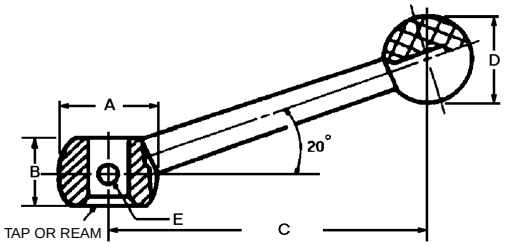

- Material: Lever, Low Carbon Steel
  Ball, Plastic
- Finish: Lever, Satin Chrome Plate
  Ball, Black

Part Number	Hub Style	A	B	C	D	E
16601	1/4 Ream	5/8	7/16	2 1/4	3/4	1/8
16602	5/16-18 Tap	5/8	7/16	2 1/4	3/4	—
16603	5/16 Ream	25/32	9/16	2 3/4	13/16	1/8
16604	3/8-16 Tap	25/32	9/16	2 3/4	13/16	—
16605	3/8 Ream	1	3/4	3 1/2	15/16	5/32
16606	1/2-13 Tap	1	3/4	3 1/2	15/16	—
16607	1/2 Ream	1 1/4	7/8	4 3/8	1 1/4	3/16
16608	5/8-11 Tap	1 1/4	7/8	4 3/8	1 1/4	—
16609	5/8 Ream	1 9/16	1 1/8	5 1/2	1 1/2	1/4
16610	3/4-10 Tap	1 9/16	1 1/8	5 1/2	1 1/2	—

Jergens
SPECIALTY FASTENERS GROUP

Single Handle Locking Lever

A fast and efficient means of clamping and locking on jigs, fixtures, machine tools and special applications where high clamping force is necessary.

- Material: Low Carbon Steel
- Finish: Zinc Plate
- Thread: Class 2B-UNC
- Handles: Copper Brazed into the hubs
- Ream: + .001
  - .000
- 3D Solid Models are available in multiple formats from www.jergensinc.com

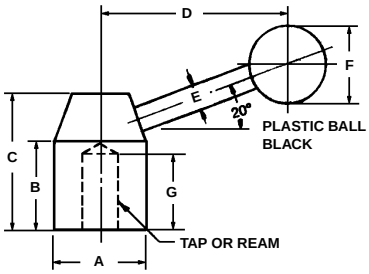

Part Number	A	B	C	D	E	F	G	Hub Style
28901	1	1	1 1/2	2	1/4	1	—	Blank
28902	1	1	1 1/2	2	1/4	1	11/16	3/8-16 Tap
28903	1	1	1 1/2	2	1/4	1	13/16	3/8 Ream
28904	1 1/4	1 1/8	1 11/16	3	3/8	1	—	Blank
28905	1 1/4	1 1/8	1 11/16	3	3/8	1	3/4	1/2-13 Tap
28906	1 1/4	1 1/8	1 11/16	3	3/8	1	7/8	1/2 Ream
28907	1 1/2	1 1/4	2	4	1/2	1 3/8	—	Blank
28908	1 1/2	1 1/4	2	4	1/2	1 3/8	15/16	5/8-11 Tap
28909	1 1/2	1 1/4	2	4	1/2	1 3/8	1 1/16	5/8 Ream

Metric

Part Number*	A	B	C	D	E	F	G	Hub Style
28901	25	25	38	50	6	25	-	Blank
28952	25	25	38	50	6	25	17	M8 Tap
28953	25	25	38	50	6	25	20	8mm Ream
28904	31	28	42	75	9	25	-	Blank
28955	31	28	42	75	9	25	19	M12 Tap
28956	31	28	42	75	9	25	22	12mm Ream
28907	38	31	50	100	13	34	-	Blank
28958	38	31	50	100	13	34	23	M16 Tap
28959	38	31	50	100	13	34	27	16mm Ream

*Dimensions in millimeters

Aluminum & Malleable Offset Handle

- Material: 319 Aluminum Alloy
  Malleable ASTM A47, GR32510
- Finish: Mill
- 3D Solid Models are available in multiple formats from www.jergensinc.com

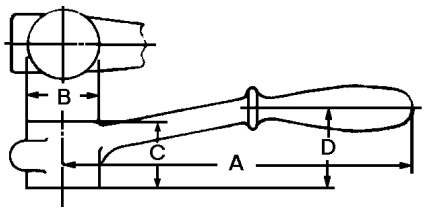

Aluminum

Part Number	A	B	C	D	Wt. (lbs)
29901	4 1/2	1	3/4	1	.15
29902	6	1 1/2	1 1/4	1 3/4	.44
29903	11	1 5/8	1 3/8	1 15/16	.78

Malleable

Part Number	Wt. (lbs)
30101	.45
30102	1.24
30103	2.25

Double Handle Locking Lever

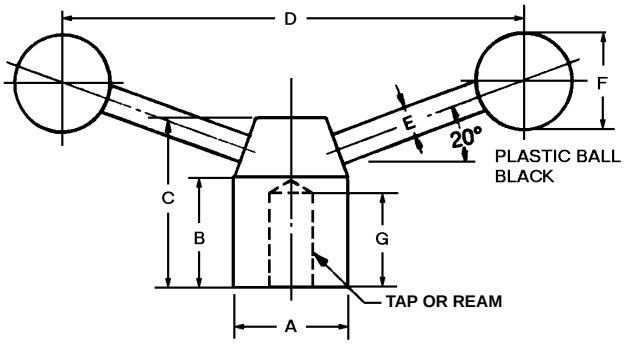

- Material: Low Carbon Steel
- Finish: Zinc Plate
- Thread: Class 2B-UNC or Class 6h
- Handles: Copper brazed into the hubs
- Ream: + .001
  - .000
- Metric Ream:
  + .025
  - .000
- 3D Solid Models are available in multiple formats from www.jergensinc.com

Locking levers with double handles are used where it is advantageous to clamp and lock quickly with high clamping force.

Part Number	A	B	C	D	E	F	G	Hub Style
28910	1	1	1 1/2	4	1/4	1	—	Blank
28911	1	1	1 1/2	4	1/4	1	11/16	3/8-16 Tap
28912	1 1/4	1 1/8	1 11/16	6	3/8	1	—	Blank
28913	1 1/4	1 1/8	1 11/16	6	3/8	1	3/4	1/2-13 Tap
28914	1 1/2	1 1/4	2	8	1/2	1 3/8	—	Blank
28915	1 1/2	1 1/4	2	8	1/2	1 3/8	15/16	5/8-11 Tap
28916	1 1/2	1 1/4	2	8	1/2	1 3/8	1 1/16	5/8 Ream

Metric

Part Number*	A	B	C	D	E	F	G	Hub Style
28910	25	25	38	100	6	25	—	Blank
28961	25	25	38	100	6	25	17	M8 Tap
28912	31	28	42	150	9	25	—	Blank
28963	31	28	42	150	9	25	19	M12 Tap
28914	38	31	50	200	13	34	—	Blank
28965	38	31	50	200	13	34	23	M16 Tap
28966	38	31	50	200	13	34	27	16mm Ream

*Dimensions in millimeters

Aluminum & Malleable Clamping Levers

- Material: 319 Aluminum Alloy
  Malleable ASTM A47, GR32510
- Finish: Mill
- 3D Solid Models are available in multiple formats from www.jergensinc.com

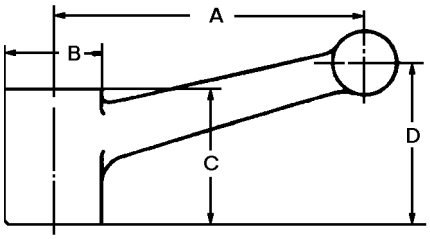

Aluminum

Part Number	A	B	C	D	Wt. (lbs)
16501	2	1	1	1 1/8	.10
16502	4	1 1/2	2	2 1/8	.53
16503	5 9/64	2	2 3/8	2 53/64	1.00

Malleable

Number	Wt. (lbs)
16701	.30
16702	1.50
16703	2.80

Metal Adjustable Handles

For adjustable clamping or tightening controls for limited operating angles. Adjustment of handle position occurs by pulling up on the handle, which disengages the teeth from the locking mechanism, and turning to the desired position. Releasing the handle allows for tightening or loosening.

Tapped Holes:
- Material: Handle, Die Cast Zinc
- Finish: Handle, Plastic Coated Steel Parts, Black Oxide
- Color: Black Satin Finish

Stainless Steel Tapped Holes:
- Material: Handle, Die Cast Zinc Steel Parts, 303 Stainless Steel
- Finish: Handle, Plastic Coated Steel Parts, Bright
- Color: Black Satin Finish

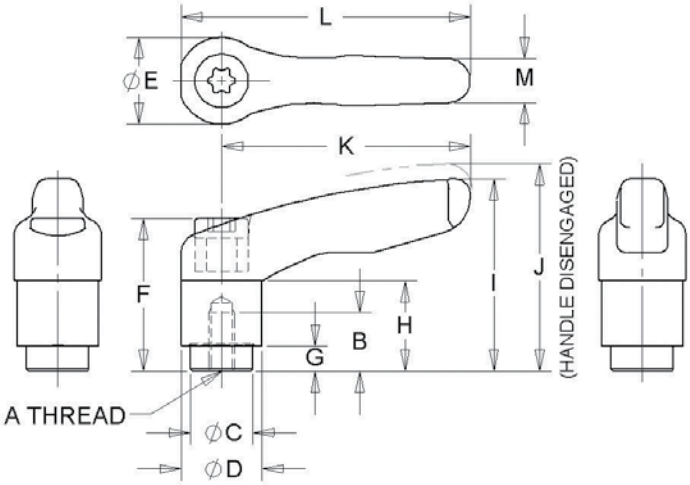

With Tapped Holes

Tapped Part Number	Stainless Tapped Part Number	A	B	C	D	E	F	G	H	I	J	K	L	M
40501	-	8-32	0.35	0.39	0.51	0.57	0.94	0.16	0.59	1.16	1.31	1.57	1.85	0.29
-	**40602**	10-24	0.35	0.39	0.51	0.57	0.94	0.15	0.59	1.16	1.31	1.57	1.85	0.29
40502	-	10-24	0.35	0.39	0.51	0.57	0.94	0.16	0.59	1.16	1.31	1.57	1.85	0.29
-	**40603**	1/4-20	0.35	0.39	0.51	0.57	0.94	0.15	0.59	1.16	1.31	1.57	1.85	0.29
40503	-	1/4-20	0.35	0.39	0.51	0.57	0.94	0.16	0.59	1.16	1.31	1.57	1.85	0.29
40504	**40604**	1/4-20	0.47	0.53	0.70	0.76	1.14	0.25	0.68	1.61	1.77	2.55	2.95	0.37
40505	**40605**	5/16-18	0.47	0.53	0.70	0.76	1.14	0.25	0.68	1.61	1.77	2.55	2.95	0.37
-	**40606**	5/16-18	0.55	0.62	0.84	0.90	1.47	0.39	0.94	2.08	2.24	3.14	3.60	0.45
40506	-	5/16-18	0.55	0.70	0.84	0.90	1.47	0.39	0.94	2.08	2.24	3.14	3.60	0.43
-	**40607**	3/8-16	0.55	0.62	0.84	0.90	1.47	0.39	0.94	2.08	2.24	3.14	3.60	0.45
40507	-	3/8-16	0.55	0.70	0.84	0.90	1.47	0.39	0.94	2.08	2.24	3.74	3.60	0.43
-	**40608**	3/8-16	0.66	0.74	1.00	1.08	1.67	0.39	1.06	2.40	2.55	3.74	4.28	0.53
40508	-	3/8-16	0.66	0.70	1.00	1.08	1.67	0.39	1.06	2.40	2.55	3.74	4.25	0.51
-	**40609**	1/2-13	0.66	0.74	1.00	1.08	1.67	0.39	1.06	2.40	2.55	3.74	4.28	0.53
40509	-	1/2-13	0.66	0.70	1.00	1.08	1.67	0.39	1.06	2.40	2.55	3.74	4.25	0.51
40510	**40610**	1/2-13	0.90	0.90	1.18	1.27	2.00	0.47	1.29	2.85	3.05	4.32	4.97	0.61
40511	**40611**	5/8-11	0.90	0.90	1.18	1.27	2.00	0.47	1.29	2.85	3.05	4.32	4.97	0.61

Jergens offers 3D models

for all handles, knobs and handwheels at www.jergensinc.com

Metal Adjustable Handles

For adjustable clamping or tightening controls for limited operating angles. Adjustment of handle position occurs by pulling up on the handle, which disengages the teeth from the locking mechanism, and turning to the desired position. Releasing the handle allows for tightening or loosening.

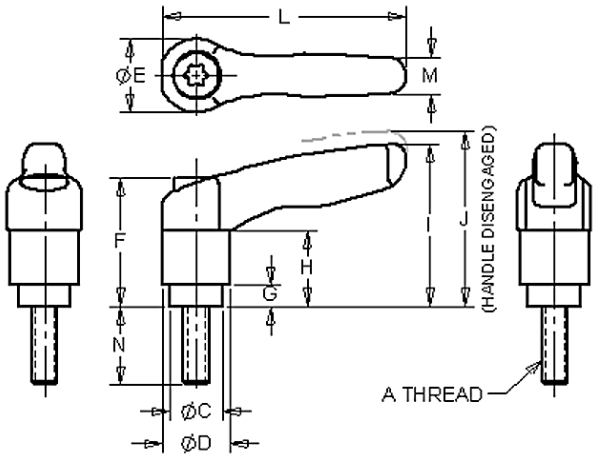

- Material: Handle, Die Cast Zinc
- Finish: Handle, Plastic Coated Steel Parts, Black Oxide
- Color: Black Satin Finish

Part Number	Thread Size A	Thread Length N	C	D	E	F	G	H	I	J	L	M
40521	10-24	.59	.39	.51	.57	.94	.16	.59	1.16	1.31	1.85	.29
40522	10-24	.98	.39	.51	.57	.94	.16	.59	1.16	1.31	1.85	.29
40523	1/4-20	.78	.39	.51	.57	.94	.16	.59	1.16	1.31	1.85	.29
40524	1/4-20	.98	.39	.51	.57	.94	.16	.59	1.16	1.31	1.85	.29
40525	1/4-20	1.57	.39	.51	.57	.94	.16	.59	1.16	1.31	1.85	.29
40526	1/4-20	.78	.53	.70	.76	1.14	.25	.68	1.61	1.77	2.95	.37
40527	1/4-20	.98	.53	.70	.76	1.14	.25	.68	1.61	1.77	2.95	.37
40528	1/4-20	1.57	.53	.70	.76	1.14	.25	.68	1.61	1.77	2.95	.37
40529	5/16-18	.78	.53	.70	.76	1.14	.25	.68	1.61	1.77	2.95	.37
40530	5/16-18	.98	.53	.70	.76	1.14	.25	.68	1.61	1.77	2.95	.37
40531	5/16-18	1.57	.53	.70	.76	1.14	.25	.68	1.61	1.77	2.95	.37
40532	3/8-16	.98	.70	.84	.90	1.47	.39	.94	2.08	2.24	3.60	.43
40533	3/8-16	1.57	.70	.84	.90	1.47	.39	.94	2.08	2.24	3.60	.43
40534	3/8-16	1.96	.70	.84	.90	1.47	.39	.94	2.08	2.24	3.60	.43
40535	3/8-16	.98	.70	1.00	1.08	1.67	.39	1.06	2.40	2.55	4.25	.51
40536	3/8-16	1.57	.70	1.00	1.08	1.67	.39	1.06	2.40	2.55	4.25	.51
40537	3/8-16	1.96	.70	1.00	1.08	1.67	.39	1.06	2.40	2.55	4.25	.51
40538	1/2-13	.98	.70	1.00	1.08	1.67	.39	1.06	2.40	2.55	4.25	.51
40539	1/2-13	1.57	.70	1.00	1.08	1.67	.39	1.06	2.40	2.55	4.25	.51
40540	1/2-13	1.96	.70	1.00	1.08	1.67	.39	1.06	2.40	2.55	4.25	.51
40541	1/2-13	.98	.90	1.18	1.27	2.00	.47	1.29	2.85	3.05	4.97	.61
40542	1/2-13	1.57	.90	1.18	1.27	2.00	.47	1.29	2.85	3.05	4.97	.61
40543	1/2-13	1.96	.90	1.18	1.27	2.00	.47	1.29	2.85	3.05	4.97	.61
40544	5/8-11	1.37	.90	1.18	1.27	2.00	.47	1.29	2.85	3.05	4.97	.61
40545	5/8-11	1.77	.90	1.18	1.27	2.00	.47	1.29	2.85	3.05	4.97	.61
40546	5/8-11	2.16	.90	1.18	1.27	2.00	.47	1.29	2.85	3.05	4.97	.61
34360	M5	25	10	13	14	24.5	4	14.5	30	33	37	7
34361	M5	35	10	13	14	24.5	4	14.5	30	33	37	7

Metal Adjustable Handles

For adjustable clamping or tightening controls for limited operating angles. Adjustment of handle position occurs by pulling up on the handle, which disengages the teeth from the locking mechanism, and turning to the desired position. Releasing the handle allows for tightening or loosening.

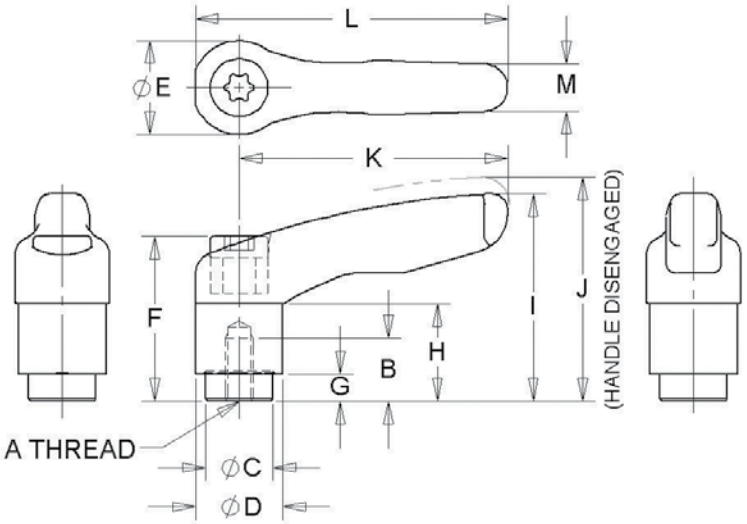

- Handle: Zinc Die Cast, Powder Coated, Satin Black
- Bolts & Internal Parts: Steel Black Oxide Finish; 303 Stainless Steel

With Stainless Steel Stud

Part Number	Thread Size A	Thread Length N	P	B	C	D	E	F	G	H	I	J	K	L	M
40621	10-24	.59	.15	.35	.39	.51	.57	.94	.15	.59	1.16	1.31	1.57	1.85	.29
40623	1/4-20	.78	.15	.35	.39	.51	.57	.94	.15	.59	1.16	1.31	1.57	1.85	.29
40625	1/4-20	1.57	.25	.47	.53	.70	.76	1.14	.25	.68	1.61	1.77	2.55	2.95	.37
40630	5/16-18	.78	.25	.47	.53	.70	.76	1.14	.25	.68	1.61	1.77	2.55	2.95	.37
40631	5/16-18	1.57	.25	.47	.53	.70	.76	1.14	.25	.68	1.61	1.77	2.55	2.95	.37
40632	3/8-16	.98	.39	.55	.62	.84	.90	1.47	.39	.94	2.08	2.24	3.14	3.60	.45
40634	3/8-16	1.96	.39	.55	.62	.84	.90	1.47	.39	.94	2.08	2.24	3.14	3.60	.45
40641	1/2-13	.98	.39	.66	.74	1.00	1.08	1.67	.39	1.06	2.40	2.55	3.74	4.28	.53
40643	1/2-13	1.96	.39	.66	.74	1.00	1.08	1.67	.39	1.06	2.40	2.55	3.74	4.28	.53
40644	5/8-11	1.57	.47	.90	.90	1.18	1.27	2.00	.47	1.29	2.85	3.05	4.32	4.97	.61
40646	5/8-11	2.36	.47	.90	.90	1.18	1.27	2.00	.47	1.29	2.85	3.05	4.32	4.97	.61

Adjustable Handle
ELESA Orginal Design

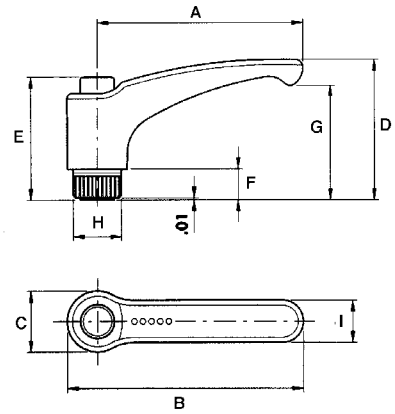

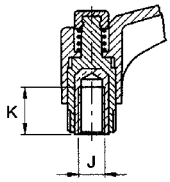

- Material: Glass Fibre Reinforced Technopolymer
- Finish: Body - Gray/Black Matte
  Push Button - Orange
- Insert: Brass With Tapped Blind Hole
- Resistant to Solvents, Oils, Greases, and other Chemical Agents
- Optional button colors available upon request (Black, Grey, Yellow, Blue & Red)

With Brass Insert

Brass Insert	Stainless Insert	A	B	C	D	E	F	G	H	I	J	K
34401	—	1.73	2.05	.61	1.28	1.16	.24	.98	.47	.43	10-24	.39
34402	**34412**	1.73	2.05	.61	1.28	1.16	.24	.98	.47	.43	1/4-20	.39
34403	—	2.48	2.89	.75	1.69	1.48	.31	1.36	.59	.53	1/4-20	.47
34404	**34414**	2.48	2.89	.75	1.69	1.48	.31	1.36	.59	.53	5/16-18	.51
34406	—	3.07	3.56	.91	2.13	1.85	.47	1.73	.75	.63	3/8-16	.67
34407	**34416**	3.07	3.56	.91	2.13	1.85	.47	1.73	.75	.63	1/2-13	.67
34408	—	3.74	4.29	1.04	2.54	2.15	.51	2.09	.85	.71	3/8-16	.79
34409	—	3.74	4.29	1.04	2.54	2.15	.51	2.09	.85	.71	1/2-13	.79

Adjustable Handle With Stud
ELESA Orginal Design

- Material: Glass Fibre Reinforced Technopolymer
- Finish: Body - Gray/Black Matte
  Push Button - Orange
- Stud: Zinc Plated Steel With Chamfered End.
- Resistant to Solvents, Oils, Greases, and other Chemical Agents
- Optional button colors available upon request (Black, Grey, Yellow, Blue & Red)

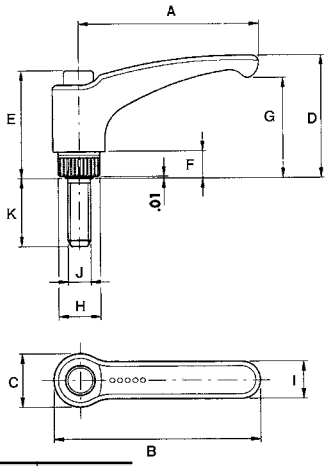

Part Number	A	B	C	D	E	F	G	H	I	J	K
34421	1.73	2.05	.61	1.28	1.16	.24	.98	.47	.43	10-24	.75
34422	1.73	2.05	.61	1.28	1.16	.24	.98	.47	.43	1/4-20	.75
34423	1.73	2.05	.61	1.28	1.16	.24	.98	.47	.43	1/4-20	1
34424	2.48	2.89	.75	1.69	1.48	.31	1.36	.59	.53	5/16-18	.75
34425	2.48	2.89	.75	1.69	1.48	.31	1.36	.59	.53	5/16-18	1
34426	2.48	2.89	.75	1.69	1.48	.31	1.36	.59	.53	5/16-18	1.2
34427	3.07	3.56	.91	2.13	1.85	.47	1.73	.75	.63	3/8-16	1
34428	3.07	3.56	.91	2.13	1.85	.47	1.73	.75	.63	3/8-16	1.2
34429	3.07	3.56	.91	2.13	1.85	.47	1.73	.75	.63	3/8-16	1.5

Plastic Button Head Adjustable Handle With Stud
ELESA Original Design

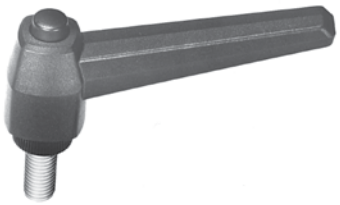

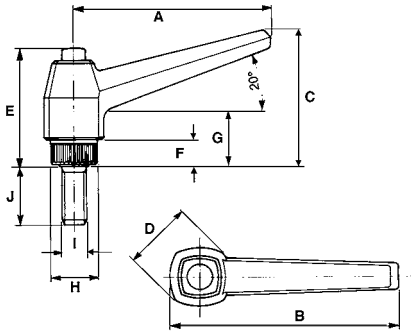

- Material: Glass-Fibre Reinforced Technopolymer Lever Body
- Finish: Black Matte
- Available with a Zinc Plated Steel Stud with a chamfered flat end or with a Brass Insert with a tapped blind hole
- Resistant to Solvents, Oils, Greases, and other Chemical Agents
- Available In Ergostyle®. See Ergostyle Section.
- 3D Solid Models are available in multiple formats from www.jergensinc.com

Part Number	A	B	C	D	E	F	G	H	I	J
34311	1.65	1.96	1.25	0.70	1.14	0.23	0.55	0.47	10-24	0.750
34312	1.65	1.96	1.25	0.70	1.14	0.23	0.55	0.47	1/4-20	0.500
34313	1.65	1.96	1.25	0.70	1.14	0.23	0.55	0.47	1/4-20	0.750
34314	1.65	1.96	1.25	0.70	1.14	0.23	0.55	0.47	1/4-20	1.00
34315	1.65	1.96	1.25	0.70	1.14	0.23	0.55	0.47	1/4-20	1.50
34321	2.48	2.87	1.69	0.90	1.45	0.31	0.66	0.60	1/4-20	0.750
34322	2.48	2.87	1.69	0.90	1.45	0.31	0.66	0.60	1/4-20	1.00
34323	2.48	2.87	1.69	0.90	1.45	0.31	0.66	0.60	1/4-20	1.50
34324	2.48	2.87	1.69	0.90	1.45	0.31	0.66	0.60	5/16-18	0.500
34325	2.48	2.87	1.69	0.90	1.45	0.31	0.66	0.60	5/16-18	0.750
34326	2.48	2.87	1.69	0.90	1.45	0.31	0.66	0.60	5/16-18	1.00
34327	2.48	2.87	1.69	0.90	1.45	0.31	0.66	0.60	5/16-18	1.25
34328	2.48	2.87	1.69	0.90	1.45	0.31	0.66	0.60	5/16-18	1.50
34329	2.48	2.87	1.69	0.90	1.45	0.31	0.66	0.60	5/16-18	2.00
34331	3.15	3.63	2.13	1.10	1.85	0.39	0.86	0.75	3/8-16	0.750
34332	3.15	3.63	2.13	1.10	1.85	0.39	0.86	0.75	3/8-16	1.00
34333	3.15	3.63	2.13	1.10	1.85	0.39	0.86	0.75	3/8-16	1.25
34334	3.15	3.63	2.13	1.10	1.85	0.39	0.86	0.75	3/8-16	1.50
34335	3.15	3.63	2.13	1.10	1.85	0.39	0.86	0.75	3/8-16	2.00
34337	3.15	3.63	2.13	1.10	1.85	0.39	0.86	0.75	1/2-13	1.25
34338	3.15	3.63	2.13	1.10	1.85	0.39	0.86	0.75	1/2-13	1.50
34339	3.15	3.63	2.13	1.10	1.85	0.39	0.86	0.75	1/2-13	2.00
34341	3.94	4.50	2.55	1.30	2.12	0.47	0.98	0.98	1/2-13	1.25
34342	3.94	4.50	2.55	1.30	2.12	0.47	0.98	0.98	1/2-13	1.50
34343	3.94	4.50	2.55	1.30	2.12	0.47	0.98	0.98	1/2-13	2.00

Plastic Button Head Tapped Adjustable Handle

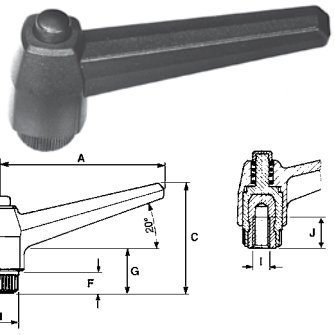

Part Number	A	B	C	D	E	F	G	H	I	J
34301	1.65	1.96	1.25	0.70	1.14	0.23	0.55	0.47	10-24	0.39
34302	1.65	1.96	1.25	0.70	1.14	0.23	0.55	0.47	1/4-20	0.39
34303	2.48	2.87	1.69	0.90	1.45	0.31	0.66	0.60	1/4-20	0.47
34304	2.48	2.87	1.69	0.90	1.45	0.31	0.66	0.60	5/16-18	0.51
34305	3.15	3.62	2.12	1.10	1.85	0.39	0.86	0.74	5/16-18	0.71
34306	3.15	3.62	2.12	1.10	1.85	0.39	0.86	0.74	3/8-16	0.67
34307	3.15	3.62	2.12	1.10	1.85	0.39	0.86	0.74	1/2-13	0.67
34308	3.94	4.48	2.55	1.30	2.12	0.47	0.98	0.98	3/8-16	0.79
34309	3.94	4.48	2.55	1.30	2.12	0.47	0.98	0.98	1/2-13	0.79

Plastic Adjustable Handle With Stainless Steel Stud
ELESA Original Design

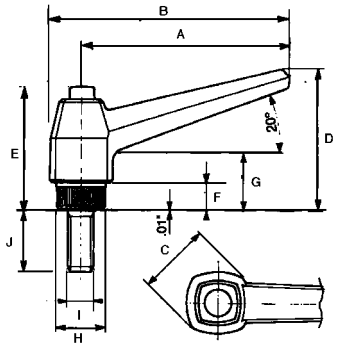

- Material: Lever Body, Glass-Fibre Reinforced Technopolymer
- Finish: Lever Body, Black Matte
- Stainless Steel Stud with chamfered flat end
- Retaining Pin, Glass-Fibre Reinforced Technopolymer integrally molded with the Locking Element
- Push Button, Black Matte Technopolymer
- Resistant to Solvents, Oils, Greases, and other Chemical Agents

Part Number	A	B	C	D	E	F	G	H	I	J
34145	2.48	2.87	0.91	1.69	1.46	0.31	0.67	0.59	5/16-18	0.750
34146	2.48	2.87	0.91	1.69	1.46	0.31	0.67	0.59	5/16-18	1.000
34147	2.48	2.87	0.91	1.69	1.46	0.31	0.67	0.59	5/16-18	1.250

Metric

Part Number*	A	B	C	D	E	F	G	H	I	J
34156	42	50	32	18	29	6	14	12	M6	16
34157	63	73	43	23	37	8	17	15	M8	20
34158	80	92	51	28	47	10	22	19	M10	20
34159	80	92	54	28	47	10	22	19	M12	30

*Dimensions in millimeters

Plastic Button Head Adjustable Tapped Handle With Stainless Steel Insert
Metric
ELESA Original Design

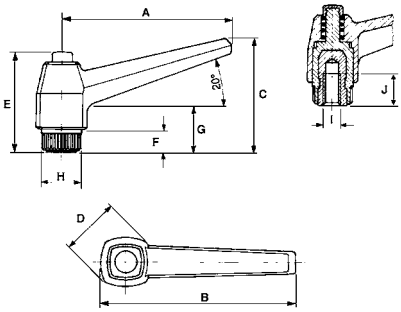

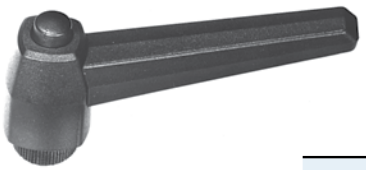

- Material: Glass-Fibre Reinforced Technopolymer Lever Body
- Finish: Black Matte
- Locking Element: Black, Glass-Fibre Reinforced Technopolymer
- Insert: 303 Stainless Steel
- Resistant to Solvents, Oils, Greases, and other Chemical Agents

Part Number*	A	B	C	D	E	F	G	H	I	J
34151	42	50	32	18	29	6	14	12	M6	10
34152	63	73	43	23	37	8	17	15	M8	13
34153	80	92	54	28	47	10	22	19	M10	17

*Dimensions in millimeters

Plastic Button Head Adjustable Handle With Stud

Metric
ELESA Original Design

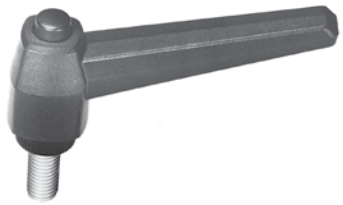

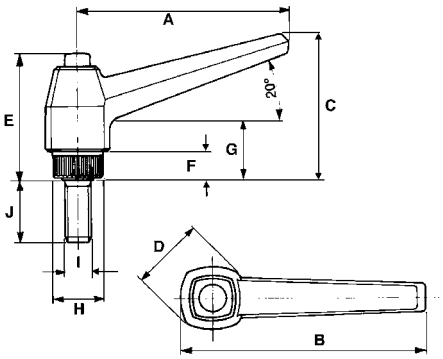

For adjustable clamping or tightening controls when the operating angle is limited. To adjust during the locking operation, lift the lever in order to disengage the teeth from the locking element and change lever position. The return spring automatically engages the teeth again.

- Material: Glass-Fibre Reinforced Technopolymer Lever Body
- Finish: Black Matte
- Locking Element: Black, Glass-Fibre Reinforced Technopolymer
- Stud: Zinc Plated Steel
- Resistant to Solvents, Oils, Greases, and other Chemical Agents

Part Number*	A	B	C	D	E	F	G	H	I	J
34362	42	50	32	18	29	6	14	12	M6	16
34363	42	50	32	18	29	6	14	12	M6	20
34364	42	50	32	18	29	6	14	12	M6	30
34365	42	50	32	18	29	6	14	12	M6	40
34374	63	73	43	23	37	8	17	15	M8	16
34375	63	73	43	23	37	8	17	15	M8	20
34377	63	73	43	23	37	8	17	15	M8	30
34378	63	73	43	23	37	8	17	15	M8	40
34379	63	73	43	23	37	8	17	15	M8	50
34381	80	92	54	28	47	10	22	19	M10	20
34383	80	92	54	28	47	10	22	19	M10	30
34385	80	92	54	28	47	10	22	19	M10	50
34387	80	92	54	28	47	10	22	19	M12	30
34388	80	92	54	28	47	10	22	19	M12	40
34391	100	114	65	33	54	12	25	25	M12	30
34393	100	114	65	33	54	12	25	25	M12	50

*Dimensions in millimeters

Plastic Button Head Tapped Adjustable Handle

Metric
ELESA Original Design

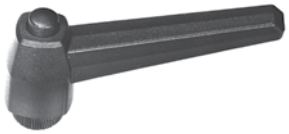

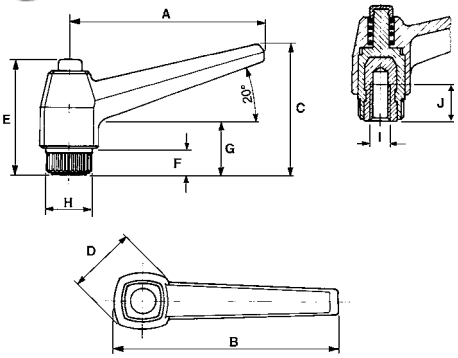

- Material: Glass-Fibre Reinforced Technopolymer Lever Body
- Finish: Black Matte
- Locking Element: Black, Glass-Fibre Reinforced Technopolymer
- Insert: Brass
- Resistant to Solvents, Oils, Greases, and other Chemical Agents

Part Number*	A	B	C	D	E	F	G	H	I	J
34352	42	50	32	18	29	6	14	12	M6	10
34354	63	73	43	23	37	8	17	15	M8	13
34355	80	92	54	28	47	10	22	19	M8	20
34356	80	92	54	28	47	10	22	19	M10	18
34357	80	92	54	28	47	10	22	19	M12	17
34359	100	114	65	33	54	12	25	25	M12	20

*Dimensions in millimeters

Control Lever
ELESA Orginal Design

- Material: Glass Fibre Reinforced Technopolymer
- Finish: Gray/Black Matte
- Removable Boss Caps
- Adaptable For Click Positioning Applications
- Slot Provided For Angle Limit Stop Pins
- Resistant to Solvents, Oils, Greases, and other Chemical Agents
- Optional cap colors available upon request (Black, Grey, Yellow, Blue & Red)

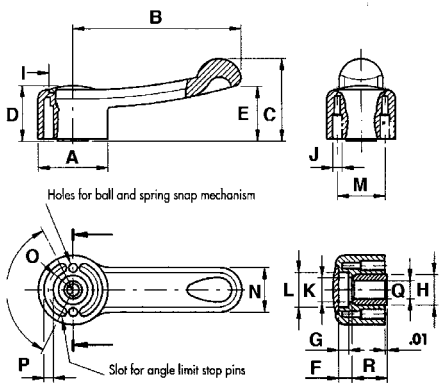

Part Number	A	B	C	D	E	F	G	H	I	J	K	L	M	N	O	P	Q	R
34460	1.46	3.35	1.56	1.04	1.02	.30	.20	.71	1.02	.20	.53	.79	1.02	.91	.54	.17	.315	.69
34461	1.81	4.33	2.13	1.38	1.42	.39	.31	.87	1.24	.24	.67	1.00	1.26	1.14	.69	.26	.472	.87

Machine Guard Handles
ELESA Original Design

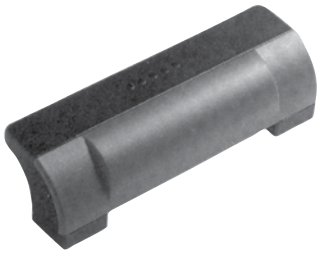

Closed Style

Open Style

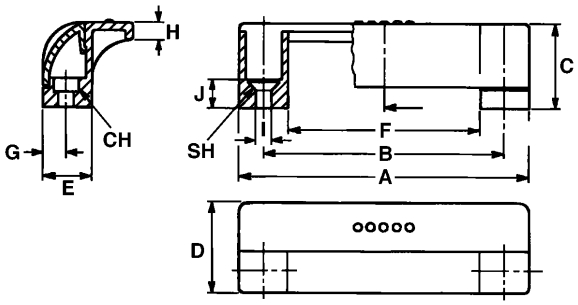

- Material: Glass-Fibre Reinforced Technopolymer
- Finish: Gray/Black Matte
- Handle Shank, Matte Reinforced Polyamide Technopolymer
- Safety Cover Caps, Technopolymer Orange
- Cylindrical Socket Head (CH) or Countersunk Head (SH) Self-Tapping Screws (use 1/4-20 screws)
- Resistant to Solvents, Oils, Greases, and other Chemical Agents
- Optional cap colors available upon request (Black, Grey, Yellow, Blue & Red)

Part Number	Mounting Style	A	B	C	D	E	F	G	H	I	J
34240	CH	4.49	3.68	1.30	1.38	.75	2.91	.37	.28	.26	.43
34241	SH	4.49	3.68	1.30	1.38	.75	2.91	.37	.28	.26	.43
34242*	CH	4.49	3.68	1.30	1.38	.75	2.91	.37	.28	.26	.43
34243*	SH	4.49	3.68	1.30	1.38	.75	2.91	.37	.28	.26	.43

* Open Style

Back Mounted Bridge Handle
ELESA Orginal Design

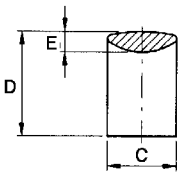

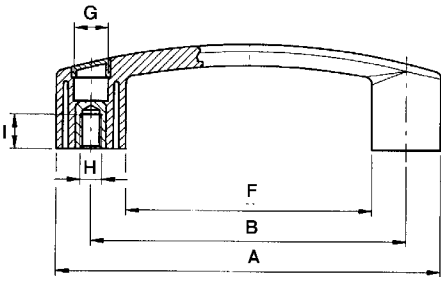

- Material: Glass Fibre Reinforced Technopolymer
- Finish: Gray/Black Matte
- Inserts: Tapped with Blind Hole
- Resistant to Solvents, Oils, Greases, and other Chemical Agents
- Optional cap colors available upon request (Black, Grey, Yellow, Orange, Blue & Red)

Part Number	A	B	C	D	E	F	G	H	I
33875	4.57	3.68	0.87	1.38	0.29	2.83	0.51	1/4-20	0.47
34469	5.67	4.61	1.02	1.54	0.33	3.62	0.53	5/16-18	0.51
33876	7.01	5.91	1.10	1.77	0.37	4.80	0.53	5/16-18	0.51

Front Mounted Bridge Handle
ELESA Orginal Design

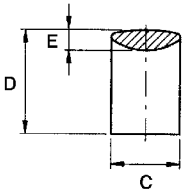

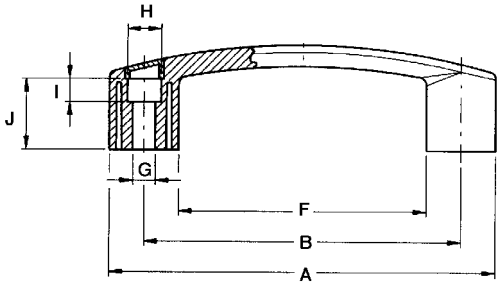

- Material: Glass Fibre Reinforced Technopolymer
- Finish: Gray/Black Matte
- Mounted by Two Through Holes in Front
- Resistant to Solvents, Oils, Greases, and other Chemical Agents
- Optional cap colors available upon request (Black, Grey, Yellow, Orange, Blue & Red)

Part Number	A	B	C	D	E	F	G	H	I	J
34467	4.57	3.68	0.87	1.38	0.29	2.83	0.25	0.41	0.25	0.92
34468	5.67	4.61	1.02	1.54	0.31	3.62	0.33	0.53	0.33	1.04
34479	7.01	5.91	1.10	1.77	0.37	4.8	0.33	0.53	0.55	1.26

Plastic Handle
ELESA Original Design

- Material: High Impact Strength Technopolymer
- Finish: Black Matte
- Insert: Brass With Tapped Blind Hole
- Resistant to Solvents, Oils, Greases, and other Chemical Agents

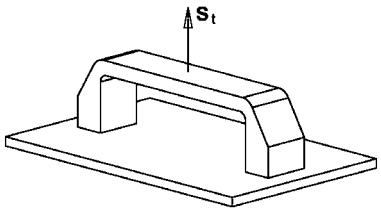

Part Number	A	B	C	D	E	F	G	St lbs
33791	3.94	3.39	1.73	0.55	0.91	1/4-20	0.47	538
33792	5.28	4.61	1.93	0.59	0.98	5/16-18	0.51	594
33793	7.72	7.05	2.24	0.63	1.06	5/16-18	0.51	450

Metric

Part Number*	A	B	C	D	E	F	G	H	St N
33706	100	86	44	14	23	M6	12	73	2400
33705	134	117	49	15	25	M8	13	103	2650
33707	196	179	57	16	27	M8	13	105	2000

*Dimensions in millimeters

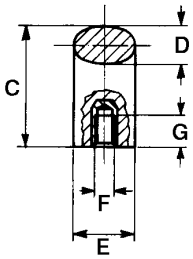

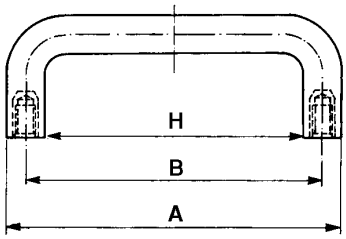

Plastic Handle
Metric
ELESA Original Design

- Material: High Impact Strength Technopolymer
- Finish: Black Matte
- Insert: Brass With Tapped Blind Hole
- Resistant to Solvents, Oils, Greases, and other Chemical Agents

Part Number*	A	B	C	D	E	F	G	H	St N
33708	134	117	38	7.5	25	102	12	M6	2000
33709	134	117	38	7.5	25	102	12	M8	2000

*Dimensions in millimeters

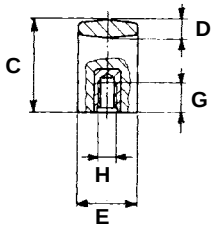

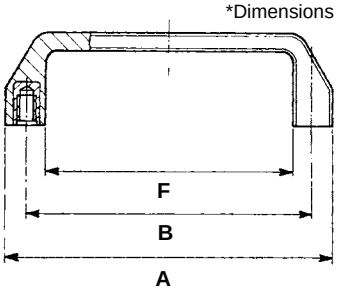

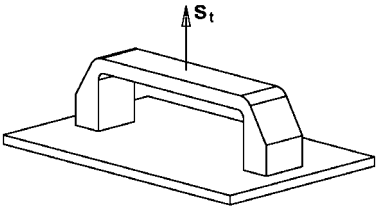

Plastic Pull/Lift Handle
ELESA Original Design

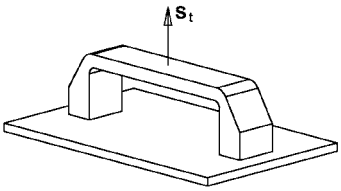

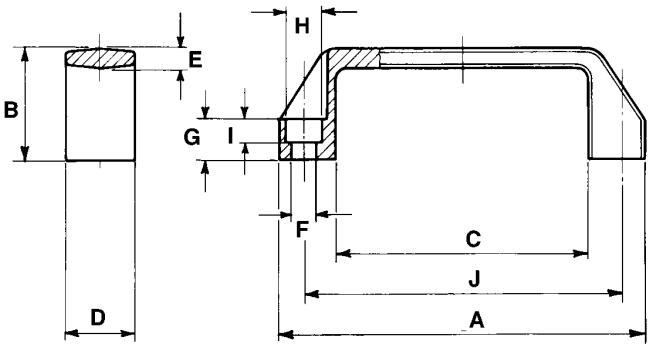

- Material: Glass-Fibre Reinforced Polyamide Technopolymer
- Finish: Black Matte
- Maximum Working Temp. 230°F
- Resistant to Solvents, Oils, Greases, and other Chemical Agents

Part Number	A	B	C	D	E	F	G	H	I	J	St*
33701	4.21	1.42	2.91	0.83	0.24	0.26	0.51	0.41	0.28	3.68	560
33702	5.28	1.61	3.74	1.02	0.28	0.34	0.59	0.53	0.33	4.61	560
33703	5.90	1.77	4.25	1.06	0.28	0.34	0.63	0.53	0.33	5.20	560
33704	7.76	1.97	6.02	1.10	0.31	0.34	0.67	0.53	0.33	7.05	605
33710	10.31	2.13	7.95	1.22	0.35	0.41	0.79	0.65	0.41	9.25	784

* Denotes Stength Table

Aluminum Tubular Handle
Elesa Original Design

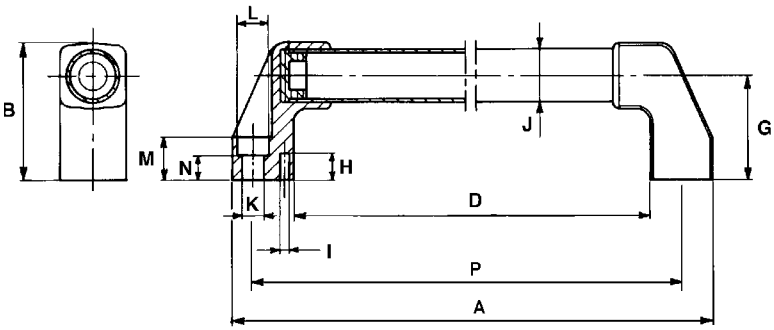

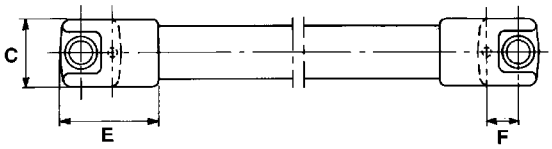

- Material: Tube, Aluminum Handle Shanks, Reinforced Polyamide Technopolymer
- Finish: Tube, Polyurethane coat on an epoxy base Color, Metalflake Graphite
- Handle Shank connection is axially knurled to the tube to prevent tube rotation
- Reference pins for safer positioning of the shanks
- Resistant to wear, scratches, and chemical agents

Part Number	A	B	C	D	E	F	G	H	I	J	K	L	M	N	P
33725	12.76	3.07	1.50	10.00	2.24	.71	2.36	.59	.16	1.18	.41	.63	.98	.59	12
33727	16.69	3.07	1.50	13.94	2.24	.71	2.36	.59	.16	1.18	.41	.63	.98	.59	16
33728	20.63	3.07	1.50	17.87	2.24	.71	2.36	.59	.16	1.18	.41	.63	.98	.59	20
33730	28.50	3.07	1.50	25.75	2.24	.71	2.36	.59	.16	1.18	.41	.63	.98	.59	28

Toggle Clamps

Adjustable Spindle Assemblies 161
Conversion Chart 184–186
Flush Mount 153
Hold Down Horizontal 150–152
Hold Down Vertical 144–149
Pull Action 153–154
Squeeze Action 160
Straight Line 156–159
Vertical Pull Action 155

Heavy Duty Clamps

Heavy Duty Cam Push Clamps
(HDC Series) 182–184
Heavy Duty Cam Swing Clamps
(HDC Series) 181–182
Heavy Duty Magna Force Cam Clamps
(HDC Series) 179–184
Heavy Duty Push-Pull Clamps
(HDP Series) 173–177
Heavy Duty Vertical Clamps
(HDV Series) 162–170
Horizontal Latch Clamps
(HDL Series) 178
Vertical Cam Clamps
(JCV Series) 171–172

Jergens®
MANUFACTURING EFFICIENCY

Jergens
SPECIALTY FASTENERS GROUP

Hold Down Vertical

70310

This light duty U-Bar clamp accepts all 8-32 diameter spindles. It is supplied with a 70963 vinyl coated spindle assembly and washers. The vertical handle type is supplied with a blue vinyl handle.

- Holding capacity: 100 lbs. max.
- Weight: 2.5 oz.
- Handle moves 62°, bar 116°
- U-Bar: 5/16" height, 3/16" inside width
- Horizontal spindle adjustment: 11/16"
- Spindle Thread: 8-32

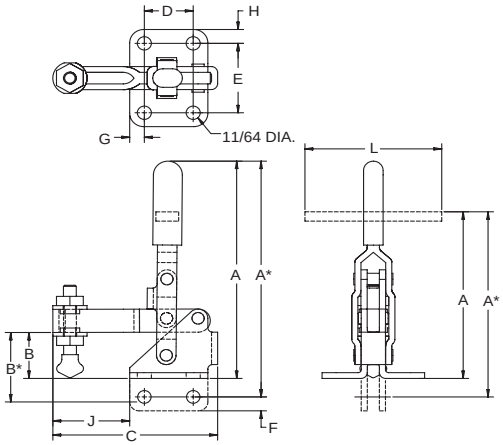

Part Number	S.S. Part No.	A	B	C	D	E	F	G	H	J	Handle Type	Bar Type	Base Type
70310	**71012**	2 7/8	5/8	2 1/8	5/8	15/16	—	3/16	3/16	1	Vertical	U-Bar	Flange
70315	**71013**	3 1/16	7/8	2 1/8	5/8	—	3/16	3/16	3/16	1	Vertical	U-Bar	Straight
70320	**—**	2 1/4	5/8	2 1/8	5/8	15/16	—	3/16	3/16	1	Tee	U-Bar	Flange
71014	**—**	2 11/16	7/8	2 1/8	5/8	—	3/16	3/16	3/16	1	Tee	U-Bar	Straight

*Straight base type dimension
Note: Width of tee handle is 1 5/8"
• U-Bar models include 2 flange washers

70280

This small compact clamp is equipped with a blue vinyl T-shaped grip handle; ideal for moderate to light duty clamping.
It is supplied with a 70917 vinyl coated spindle assembly with washer.

- Holding capacity: 150 lbs.
- Weight: 2 oz.
- Handle moves 175°, bar 92°
- U-Bar: 5/16" height, 7/32" inside width
- Horizontal spindle adjustment: 5/8"
- Spindle Thread: 10-32
- Spindle Number: 70917

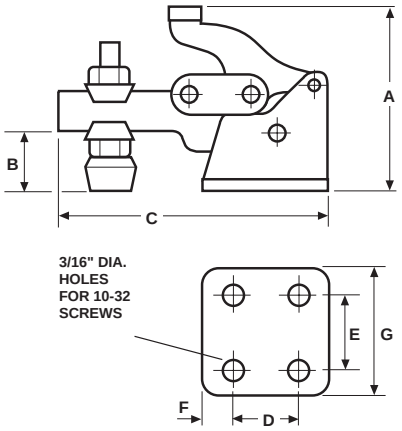

Part Number	S.S. Part No.	A	B	C	D	E	F	G
70280	**71015**	1 13/32	17/32	2 1/4	17/32	5/8	1/4	1 1/32

Note: Width of tee handle is 1 1/16"

For accessories see page 161. For interchangeability with other toggle clamps, see page 184.

Hold Down Vertical

70330

This clamp has a narrow bar with a stationary spindle that accepts all 1/4-20 diameter spindles. Each clamp is supplied with a 70926 neoprene tipped spindle assembly. The vertical handle type is supplied with a blue vinyl handle.

- Holding capacity: 200 lbs. max.
- Weight: 6 oz.
- Handle moves 60°, bar 117°
- Solid Bar: 3/8" height, 7/32" wide
- Spindle Thread: 1/4-20

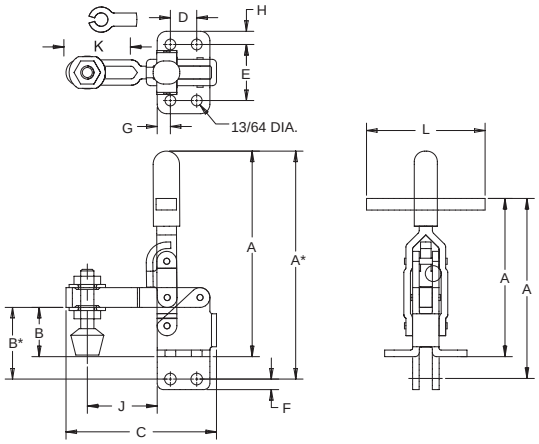

Part Number	A	B	C	D	E	F	G	H	J	Handle Type	Bar Type	Base Type
70330	3 3/4	15/16	2 9/16	1/2	1 1/16	—	1/4	1/4	1 1/16	Vertical	Solid	Flange
70335	3 15/16	1 1/8	2 9/16	1/2	—	1/4	1/4	1/4	1 1/16	Vertical	Solid	Straight
70340	2 13/16	15/16	2 9/16	1/2	1 1/16	—	1/4	1/4	1 1/16	Tee	Solid	Flange
71016	2 13/16	1 1/8	2 9/16	1/2	—	1/4	1/4	1/4	1 1/16	Tee	Solid	Straight

*Straight base type dimension
Note: Width of tee handle is 2 9/16"

- Solid arm models include a bolt retainer
- U-Bar models include 2 flange washers

70342

This vertical clamp is equipped with a 1/4-20 spindle which has a tip, washers, and locknut for easy clamping. A blue vinyl handle is included. Each clamp is supplied with a 70926 vinyl coated spindle assembly with washer.

- Holding capacity: 250 lbs.
- Weight: 6 oz.
- Handle moves 64°, bar 104°
- U-Bar: 3/8" height, 1/4" inside width
- Horizontal spindle adjustment: 1 1/8"
- Spindle Thread: 1/4-20
- Spindle Number: 70926

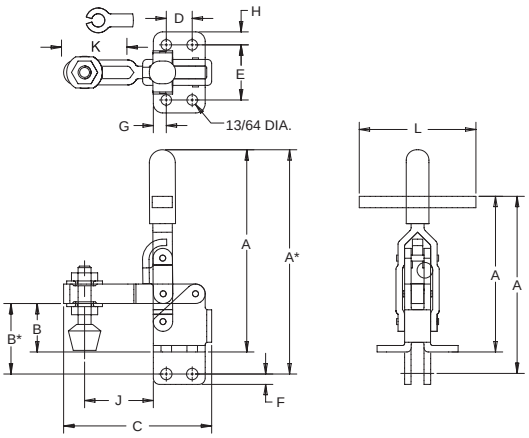

Part Number	A	B	C	D	E	F	G	H	J	Handle Type	Bar Type	Base Type
70342	4	15/16	3	1/2	1 1/16	—	1/4	1/4	1 3/4	Vertical	U-Bar	Flange
71017	4	1 1/8	3	1/2	—	9/32	1/4	1/4	1 3/4	Vertical	U-Bar	Straight
71018	2 13/16	1 1/8	3	1/2	—	9/32	1/4	1/4	1 3/4	Tee	U-Bar	Straight
71019	2 13/16	15/16	3	1/2	1 1/16	—	1/4	1/4	1 3/4	Tee	U-Bar	Flange

*Straight base type dimension
Note: Width of tee handle is 2 9/16"
- Solid arm models include a bolt retainer
- U-Bar models include 2 flange washers

For accessories see page 161. For interchangeability with other toggle clamps, see page 184.

Hold Down Vertical

70350

This popular style of clamp includes solid bar and U-Bar construction. Each clamp accepts all 5/16-18 diameter spindles. Each clamp is supplied with a 70947 neoprene tipped spindle assembly. The vertical handle type is supplied with a blue vinyl handle.

- Holding capacity: 500 lbs. max.
- Weight: 11 oz.
- Handle moves 60°, bar 100°
- Solid Bar: 5/8" height, 1/4" wide
- U-Bar: 5/8" height, 21/64" inside width
- Horizontal spindle adjustment: 1 1/2"
- Spindle Thread: 5/16-18

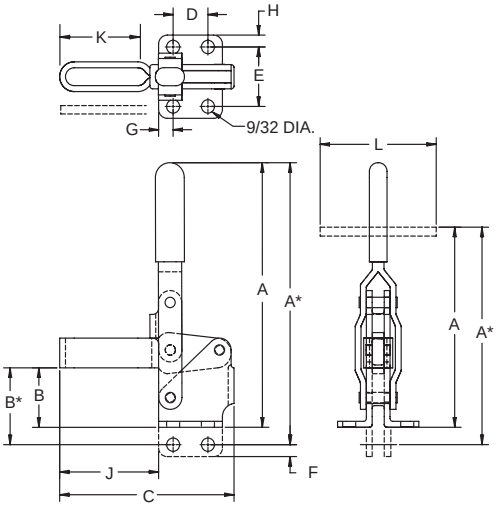

Part Number	A	B	C	D	E	F	G	H	J	Handle Type	Bar Type	Base Type
70350	5 5/8	1 1/4	4	3/4	1.25	—	5/16	1/4	2.25	Vertical	Solid	Flange
70355	5 15/16	1 9/16	4	3/4	—	1/4	5/16	—	2.25	Vertical	Solid	Straight
70360	4 1/16	1 1/4	4	3/4	1.25	—	5/16	1/4	2.25	Tee	Solid	Flange
70365	5 5/8	1 1/4	5 1/4	3/4	1.25	—	5/16	1/4	3.4375	Vertical	Solid	Flange
71020	4 1/16	1 9/16	3 3/4	3/4	—	1/4	5/16	1/4	2 1/4	Tee	Solid	Straight
71021	5 5/8	1 9/16	4 1/8	3/4	—	1/4	5/16	1/4	3 7/16	Vertical	Solid	Straight
71022	4 1/16	1 9/16	4 1/8	3/4	—	1/4	5/16	1/4	3 7/16	Tee	Solid	Straight
71023	4 1/16	1 1/4	4 1/8	3/4	1.25	1/4	5/16	1/4	3 7/16	Tee	Solid	Flange
70380	5 5/8	1 1/4	4	3/4	1.25	—	5/16	1/4	2.25	Vertical	U-Bar	Flange
70385	6 5/16	1 9/16	4	3/4	—	1/4	5/16	—	2.25	Vertical	U-Bar	Straight
70390	4 1/16	1 1/4	4	3/4	1.25	—	5/16	1/4	2.25	Tee	U-Bar	Flange
70395	5 5/8	1 1/4	5 1/2	3/4	1.25	—	5/16	1/4	3.75	Vertical	U-Bar	Flange
71024	4 5/8	1 9/16	3 3/4	3/4	—	1/8	5/16	1/4	2 1/4	Tee	U-Bar	Straight
71025	6 5/16	1 9/16	4 7/16	3/4	—	1/8	5/16	1/4	3 3/4	Vertical	U-Bar	Straight
71026	4 5/8	1 9/16	4 7/16	3/4	—	1/8	5/16	1/4	3 3/4	Tee	U-Bar	Straight
71027	4 1/16	1 1/4	4 7/16	3/4	1.25	—	5/16	1/4	3 3/4	Tee	U-Bar	Flange

*Straight base type dimension. Note: Width of tee handle is 3 5/8".
- Solid arm models include a bolt retainer
- U-Bar models include 2 flange washers

For accessories see page 161. For interchangeability with other toggle clamps, see page 184.

Hold Down Vertical

70440

This large capacity clamp is available in solid bar and U-Bar construction. It accepts all 3/8-16 diameter spindles. The solid bar clamp is supplied with a 70910 bolt retainer and 70915 neoprene tipped spindle assembly. The U-Bar style is supplied with 2 flanged washers and the 70915 spindle assembly. The vertical handle type is supplied with a blue vinyl handle.

- Holding capacity: 750 lbs. max.
- Weight: 1 lb., 5 oz.
- Handle moves 58°, bar 106°
- Solid Bar: 3/4" height, 5/16" wide
- U-Bar: 3/4" height, 7/16" inside width
- Horizontal spindle adjustment: 2 9/16"
- Spindle Thread: 3/8-16

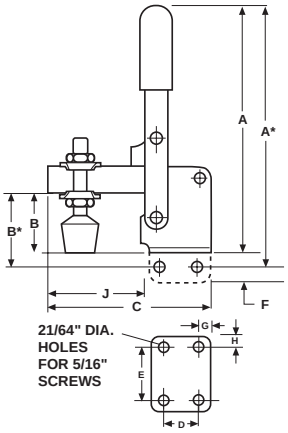

Part Number	A	B	C	D	E	F	G	H	J	Handle Type	Bar Type	Base Type
70420	7 3/4	1 11/16	5 1/2	1 1/4	1 25/32	—	21/64	3/8	3 19/32	Vertical	Solid	Flange
70425	8 1/4	2 3/16	5 1/2	1 1/4	—	3/8	21/64	—	3 19/32	Vertical	Solid	Straight
70430	5 1/4	1 11/16	5 1/2	1 1/4	1 25/32	—	21/64	3/8	3 19/32	Tee	Solid	Flange
71028	6 1/8	2 3/16	5 1/2	1 1/4	—	3/8	21/64	—	3 19/32	Tee	Solid	Straight
70440	7 3/4	1 11/16	5 1/2	1 1/4	1 25/32	—	21/64	3/8	3 17/32	Vertical	U-Bar	Flange
70445	8 1/4	2 3/16	5 1/2	1 1/4	—	3/8	21/64	—	3 17/32	Vertical	U-Bar	Straight
70450	5 1/4	1 11/16	5 1/2	1 1/4	1 25/32	—	21/64	3/8	3 17/32	Tee	U-Bar	Flange
71029	6 1/8	2 3/16	5 1/2	1 1/4	—	3/8	21/64	—	3 17/32	Tee	U-Bar	Straight

*Straight base type dimension. Note: Width of tee handle is 5".

For accessories see page 161. For interchangeability with other toggle clamps, see page 184.

70470

This heavy duty clamp is available with solid bar and U-Bar construction. It accepts all 1/2-13 diameter spindles. The solid bar model is supplied with a 70901 bolt retainer. The U-Bar model is supplied with 2-70902 flanged washers. **Spindle assembly 70903 must be ordered separately for both models**.

- Holding capacity: 1000 lbs. max.
- Weight: 2 lbs., 7 oz.
- Handle moves 67°, bar 120°
- Solid Bar: 7/8" height, 3/8" wide
- U-Bar: 7/8" height, 17/32" inside width
- Horizontal spindle adjustment: 3 1/8"
- Spindle Thread: 1/2-13

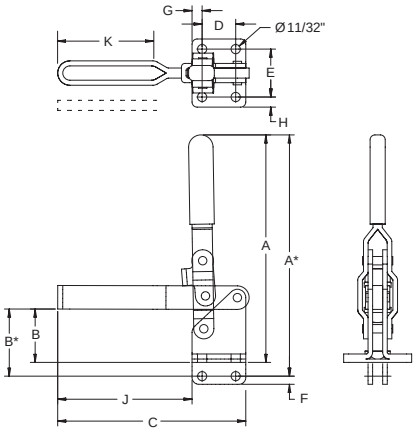

Part Number	A	B	C	D	E	F	G	H	J	Handle Type	Bar Type	Base Type
70460	9	2	7	1 1/4	1 25/32	—	3/8	3/8	5	Vertical	Solid	Flange
71030	9 1/2	2 1/4	7	1 1/4	—	3/8	3/8	—	5	Vertical	Solid	Straight
70470	9	2	7	1 1/4	1 25/32	—	3/8	3/8	5	Vertical	U-Bar	Flange
71031	9 1/2	2 1/4	7	1 1/4	—	3/8	3/8	—	5	Vertical	U-Bar	Straight

For accessories see page 161. For interchangeability with other toggle clamps, see page 184.

Hold Down Vertical

70480

This is the largest capacity vertical style clamp. It's available in solid bar or U-Bar construction and accepts all 5/8-11 diameter spindles. The solid bar is supplied with a 70940 bolt retainer. The U-Bar is supplied with 2-70941 flanged washers. **Spindle assembly 70942 must be ordered separately**. Each model is supplied with a blue vinyl handle.

- Holding capacity: 1200 lbs. max.
- Weight: 5 lbs., 2 oz.
- Handle moves 70°, bar 140°
- Solid Bar: 1 1/4" height, 3/8" wide
- U-Bar: 1 1/4" height, 21/32" inside width
- Horizontal spindle adjustment: 4"
- Spindle Thread: 5/8-11

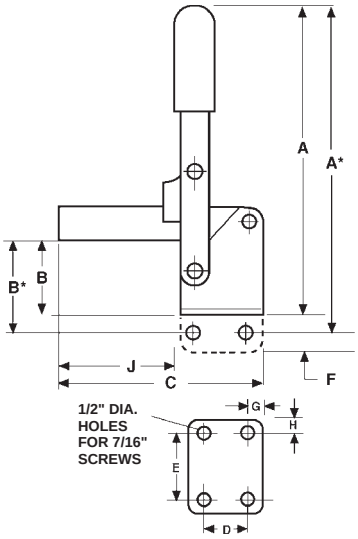

Part Number	A	B	C	D	E	F	G	H	J	Handle Type	Bar Type	Base Type
70480	12 1/8	3 1/4	9	2	2 3/4	—	1/2	1/2	5 7/8	Vertical	Solid	Flange
71032	13 3/8	4	9	2	—	1 1/4	1/2	—	5 7/8	Vertical	Solid	Straight
70490	12 1/8	3 1/4	9	2	2 3/4	—	1/2	1/2	5 7/8	Vertical	U-Bar	Flange
71033	13 3/8	4	9	2	—	1 1/4	1/2	—	5 7/8	Vertical	Solid	Straight

For accessories see page 161. For interchangeability with other toggle clamps, see page 184.

Hold Down Vertical

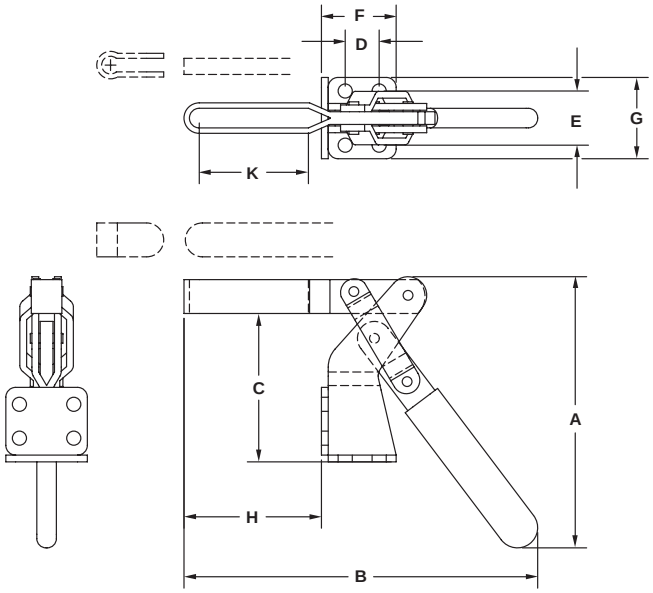

This clamp is available with a solid or U-Bar model.
It features both a horizontal and vertical mounting surface.
A neoprene tipped spindle assembly is included with both models. A bolt retainer is furnished with the solid bar model.

- Holding capacity: 220 lbs. max.
- U-Bar: 5/8" height, 11/32" inside width
- Spindle Thread: 5/16-18

Part Number	A	B	C	D	E	F	G	H	K	Bar Type	Wt (oz.)
70285	5 1/2	6 1/16	2 3/4	5/8	1	1 3/8	1 1/2	2 1/2	2	U-Bar	15
71037	5 1/2	6 7/16	2 3/4	5/8	1	1 3/8	1 1/2	2 1/2	—	Solid	16

- Solid arm models include a bolt retainer
- U-Bar models include 2 flange washers

For accessories see page 161. For interchangeability with other toggle clamps, see page 184.

Jergens
SPECIALTY FASTENERS GROUP

Hold Down Horizontal

70210

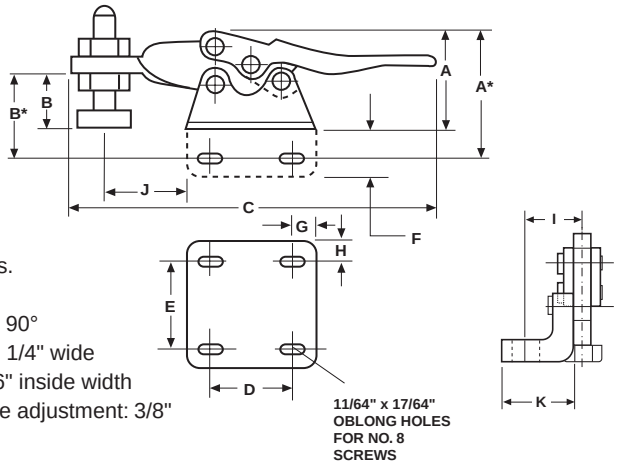

The small size of this clamp is ideal for jobs requiring minimal hold down force. Available in solid or U-Bar construction. All models are supplied with 70962 nylon spindle assemblies and blue vinyl handles.

- Holding capacity: 60 lbs.
- Weight: 1 oz.
- Handle moves 80°, bar 90°
- Solid Bar: 3/32" height, 1/4" wide
- U-Bar: 1/4" height, 3/16" inside width
- U-Bar horizontal spindle adjustment: 3/8"
- Spindle Thread: 8-32

Part Number	S.S. Part No.	A	B	C	D	E	F	G	H	J	I	K	Bar Type	Base Type
70210	—	3/4	13/32	2 3/4	5/8	5/8	—	5/32	5/32	11/16	—	—	Solid	Flange
70211	—	3/4	13/32	2 3/4	5/8	—	—	5/32	5/32	21/32	3/8	1/2	Solid	1/2 Flange-Left
71001	—	3/4	13/32	2 3/4	5/8	—	—	5/32	5/32	21/32	3/8	1/2	Solid	1/2 Flange-Right
70215	—	15/16	19/32	2 3/4	5/8	—	11/32	5/32	5/32	11/16	—	—	Solid	Straight
70230	**71002**	3/4	5/16	2 21/32	5/8	5/8	—	5/32	5/32	11/16	—	—	U-Bar	Flange
70231	—	3/4	5/16	2 3/4	5/8	—	—	5/32	5/32	21/32	3/8	1/2	U-Bar	1/2 Flange-Left
71003	—	3/4	5/16	2 3/4	5/8	—	—	5/32	5/32	21/32	3/8	1/2	U-Bar	1/2 Flange-Right
70235	—	15/16	1/2	2 21/32	5/8	—	11/32	5/32	5/32	11/16	—	—	U-Bar	Straight

*Straight base type dimension
Note: J dimension goes all the way to end of the U-Bar models

- Solid arm models include a bolt retainer
- U-Bar models include 2 flange washers

70260

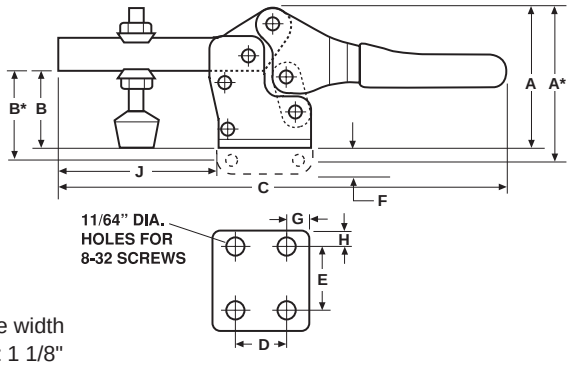

This light duty clamp is designed with a large clearance area between the bar and handle when the clamps are in the full open position. A blue vinyl handle is included. Includes vinyl coated spindle assembly.

- Holding capacity: 150 lbs.
- Weight: 3 oz.
- Handle moves 60°, bar 90°
- U-Bar: 3/8" height, 7/32" inside width
- Horizontal spindle adjustment: 1 1/8"
- Spindle Thread: 10-32

Part Number	S.S. Part No.	A	B	C	D	E	F	G	H	J	Base Type
70260	**71004**	1 13/32	3/4	4 3/8	17/32	11/16	—	5/32	1/8	1 5/8	Flange
71005	—	1 3/4	13/16	4 3/8	17/32	—	3/8	5/32	1/8	1 5/8	Straight

*Straight base type dimension
Note: J dimension goes all the way to end of the U-Bar models

For accessories see page 161. For interchangeability with other toggle clamps, see page 184.

Hold Down Horizontal

70240

This medium duty clamp is ideal for limited space applications. It is supplied with a 70926 neoprene tipped spindle assembly.

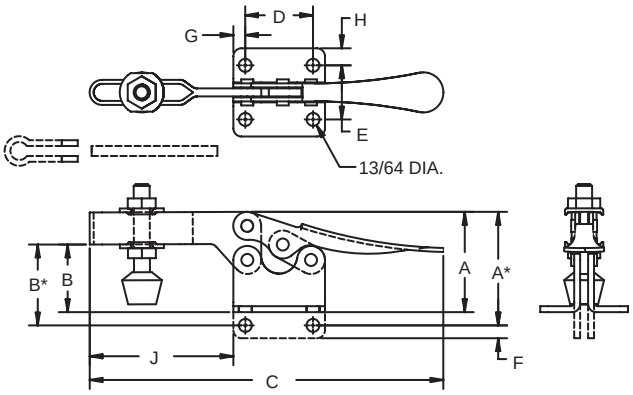

- Holding capacity: 200 lbs.
- Weight: 5 oz.
- Handle moves 60°, bar 90°
- U-Bar: 1/2" height, 17/64" inside width
- Horizontal spindle adjustment: 1 1/4"
- Spindle Thread: 1/4-20

Part Number	S.S. Part No.	A	B	C	D	E	F	G	H	J	Bar Type	Base Type
70240	**71006**	1 1/2	1	5 7/16	1 1/16	7/8	—	3/16	17/64	2 1/4	U-Bar	Flange
70245	**71007**	1 45/64	1 1/4	5 7/16	1 1/16	—	15/32	3/16	17/64	2 1/4	U-Bar	Straight
71008	**—**	1 1/2	1	5 7/16	1 1/16	7/8	—	3/16	17/64	2 1/4	Soild	Flange
71009	**—**	1 45/64	1 1/4	5 7/16	1 1/16	—	15/32	3/16	17/64	2 1/4	Solid	Straight

*Straight base type dimension

- Solid arm models include a bolt retainer
- U-Bar models include 2 flange washers

70262

These medium and large capacity clamps have a large clearance area between the bar and the handle when the clamps are in the fully open position. A blue vinyl handle is included.

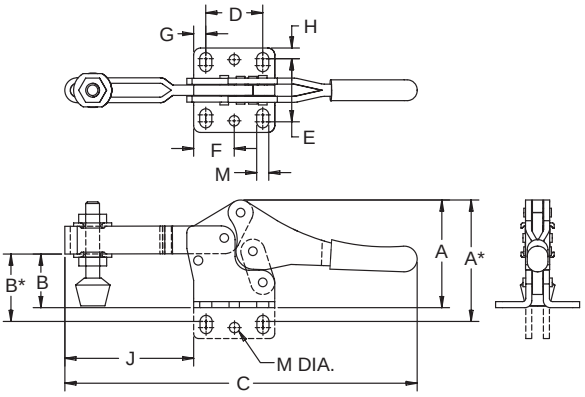

- For 70262
- Holding capacity: 200 lbs.
- Weight: 7 oz.
- Handle moves 76°, bar 92°
- U-Bar: 1/2" height, 1/4" inside width
- Horizontal spindle adjustment: 1 21/32"
- Spindle Number: 70926

- For 70264
- Holding capacity: 500 lbs.
- Weight: 16 oz.
- Handle moves 62°, bar 92°
- U-Bar: 9/16" height, 11/32" inside width
- Horizontal spindle adjustment: 1 13/32"
- Spindle Number: 70947

Part Number	A	B	C	D	E	F	G	H	J	K	M	Base Type
70262	2	15/16	6 15/32	1 1/32	1 3/32	23/32	7/32	3/32	2 3/8	1/4-20	7/32	Flange
70264	2 7/16	1 11/32	7 13/32	1 1/32	1 7/32	13/16	9/32	3/32	2 9/16	5/16-18	1/4	Flange
71010	2 9/16	1 3/16	6 15/32	1 1/32	—	23/32	7/32	3/32	2 3/8	1/4-20	7/32	Straight
71011	2 7/8	1 1/2	7 13/32	1 1/32	—	13/16	9/32	3/32	2 9/16	5/16-18	1/4	Straight

- Solid arm models include a bolt retainer
- U-Bar models include 2 flange washers

For accessories see page 161. For interchangeability with other toggle clamps, see page 184.

Hold Down Horizontal

70250

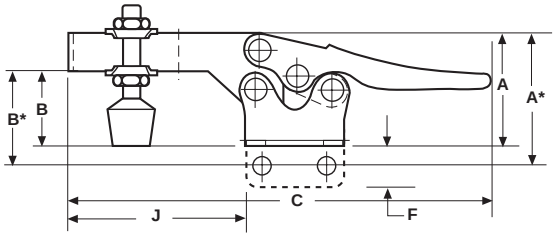

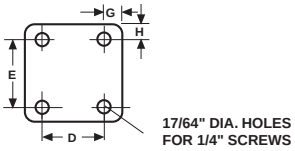

Similar to model 70240, except larger in overall size and capacity. Supplied with a 70947 neoprene tipped spindle assembly.

- Holding capacity: 500 lbs. max.
- Weight: 9 oz.
- Handle moves 65°, bar 90°
- U-Bar: 1/2" height, 21/64" inside width
- Horizontal spindle adjustment: 1 3/8"
- Spindle Thread: 5/16-18

Part Number	A	B	C	D	E	F	G	H	J	Bar Type	Base Type
70250	1 7/8	1 3/8	6 5/8	1	7/8	—	1/4	1/4	2 3/4	U-Bar	Flange
70255	2 1/8	1 5/8	6 5/8	1	—	1/2	1/4	1/4	2 3/4	U-Bar	Straight

*Straight base type dimension • U-Bar models include 2 flange washers

70270

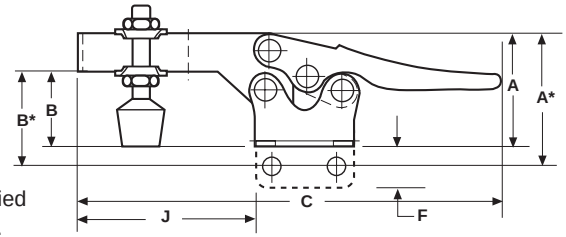

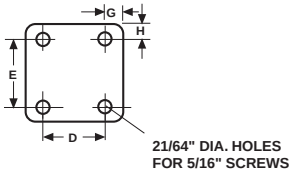

This horizontal clamp is available with U-Bar construction in a flanged or straight base. Supplied with a 70915 neoprene tipped spindle assembly. Both models supplied with a blue vinyl handle.

- Holding capacity: 750 lbs. max.
- Weight: 1 lb., 8 oz.
- Handle moves 55°, bar 90°
- U-Bar: 3/4" height, 7/16" inside width
- Horizontal spindle adjustment: 2 1/4"
- Spindle Thread: 3/8-16

Part Number	A	B	C	D	E	F	G	H	J	Bar Type	Base Type
70270	2 1/2	1 3/4	10 1/4	1 5/8	1 5/8	—	5/16	5/16	4 1/8	U-Bar	Flange
70275	3 1/16	2 3/8	10 1/4	1 5/8	—	7/8	5/16	5/16	4 1/8	U-Bar	Straight

*Straight base type dimension • U-Bar models include 2 flange washers

For accessories see page 161. For interchangeability with other toggle clamps, see page 184.

Flush Mount

70120

This clamp can be flush mounted using the hex locknut or it can be mounted directly into tapped hole. Either mounting allows 360° clamp rotation. The clamp locks in forward or reverse position. It is furnished with the hex locknut and a blue vinyl handle.

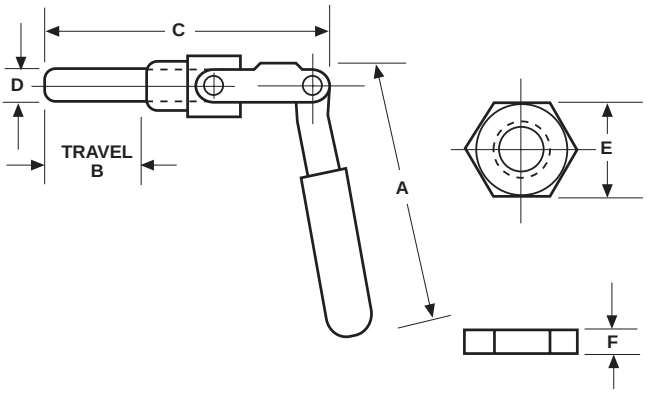

Part Number	A	Travel B	C	D	E	F	Thread	Holding Capacity (lbs)	Wt. (oz.)	Plunger Tapped
70118	2 7/8	3/4	2 7/16	3/8	15/16	1/4	5/8-18	200	3.5	1/4-20 x 19/32
70120	4	1 1/2	4 3/4	7/16	1	1/4	3/4-16 x 5/8	300	9	5/16-18 x 1
70140	5 1/4	2 5/8	6 11/16	5/8	1 1/2	1/4	1-14 x 7/8	700	27	3/8-16 x 1 1/4

Pull Action

70570

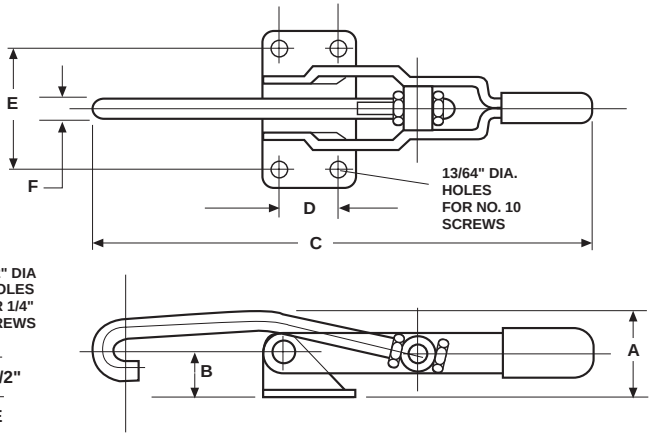

The adjustable hook is ideal for latching, locking or fastening doors, fixtures, pressure vessels, covers, and hatches on storage tanks. The hook bar has a 4" pull and is threaded for convenient adjustment. This clamp is furnished with a blue vinyl handle.

Note: Longer Hook Lengths Available Upon Request

Part Number	A	B	C	D	E	F	Drawing Movement	Holding Capacity (lbs)	Wt. (oz.)
70570	1 7/16	3/4	8 5/16	3/4	1 3/8	5/16	4	375	10
70580	1 7/16	3/4	8 5/16	1 1/2	—	5/16	4	375	10
71039	2 5/8	1 13/16	13 1/4	1 1/8	2 3/8	1/2	6 1/8	990	16

Note: 70580 is a narrow base 1/2" wide

For accessories see page 161. For interchangeability with other toggle clamps, see page 184.

Jergens
SPECIALTY FASTENERS GROUP

Pull Action

70550

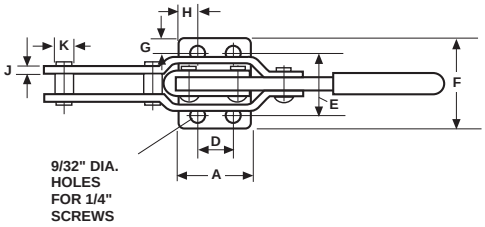

Ideal for locking and fastening on fixtures. Adjustable stop permits positioning of handle to limit travel once the clamp is installed. 4" drawing movement valuable for a wide range of applications.

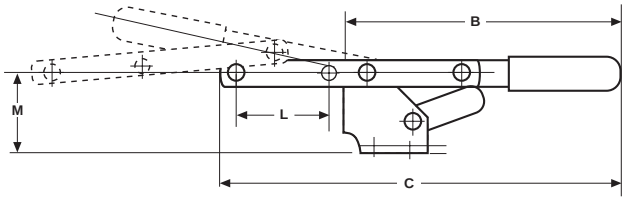

Part Number	A	B	C	D	E	F	G	H	J	K	L	M	Holding Capacity (lbs)	Wt. (oz.)
70550	1 3/8	5 11/16	8 5/16	3/4	1 1/4	1 3/4	1/4	5/16	1/8	3/8	1 7/8	1 5/8	375	12
70555	1 7/8	4 5/8	9 5/8	1 1/4	1 25/32	2 1/2	3/8	11/32	1/8	3/8	1 7/8	2 1/16	1,200	18

70560

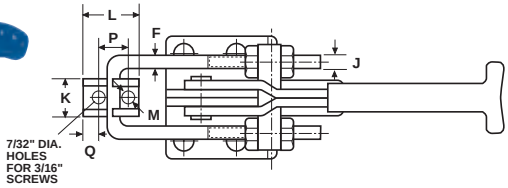

The Jergens Latch Clamp is ideal for closure/release applications on covers, lids, doors, guards, and containers. The clamp's unique versatility is attributed to its adjustable U-Bar design. The clamp is supplied with a T-Handle vinyl grip and Latch Plate.

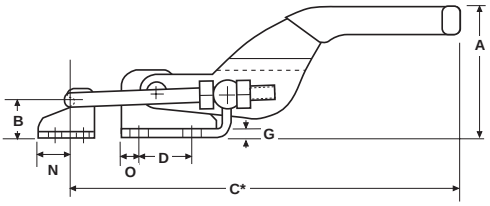

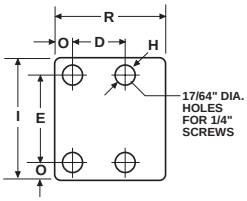

Part Number	S.S. Part No.	A	B	C*	D	E	F	G	H (Dia.)	I	J	K	L	M (Dia.)	N	O	P	Q	R	Holding Capacity (lbs)	Wt (oz.)
70558	**71040**	1 5/32	15/32	3 15/32	5/8	3/4	3/16	1/16	3/16	1 3/32	M4 x .7	17/32	25/32	3/16	7/16	7/32	13/32	1/4	1 1/32	360	2.5
70560	—	1 3/4	21/32	5 5/8	3/4	1 1/4	3/16	1/8	17/64	1 3/4	10-32	11/16	1 1/64	7/32	1/2	1/4	9/16	7/32	1 9/16	700	7
70562	—	2 3/4	15/16	6 3/4	1 5/8	1 1/2	5/16	5/32	11/32	2 1/8	M8 x 1.25	1 3/16	1 1/2	11/32	3/4	3/8	3/4	3/8	2 3/8	2000	21

*Adjusts 1/2"

For accessories see page 161. For interchangeability with other toggle clamps, see page 184.

Vertical Pull Action

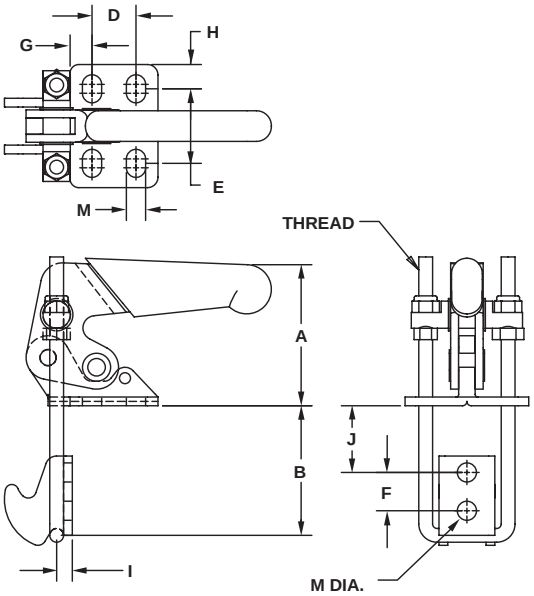

This clamp is for vertical locking applications, where it is preferable to mount the clamp on a lid. The U-bolt allows for easy adjustment and provide a positive connection with the latch plate (included).

• Handle moves 145°

Part Number	A	U-Bolt Range B	C	D	E	F	G	H	I	U-Bolt Range J	M
71041	1 5/8	1-1 7/8	15/16	1/2	7/8	7/16	1/4	1/4	3/16	3/16-1 3/32	7/32
71042	2 7/16	1 5/16-2 13/32	1 7/32	3/4	1 1/8	9/16	5/16	3/8	1/4	9/32-1 3/8	1/4
70565	3 7/32	1 25/32-3 3/16	1 21/32	1/4	19/32	3/4	3/8	1/2	5/16	11/32-1 25/32	11/32

Part Number	Thread Size	Holding Capacity (lbs)	Wt. (oz.)
71041	M4 x 0.7	305	4
71042	M6 x 1.0	550	11
70565	M8 x 1.25	990	25

For accessories see page 161. For interchangeability with other toggle clamps, see page 184.

Straight Line

70810

This straight-line extra heavy duty clamp is constructed of malleable iron castings and cold rolled steel. The pivot joints are stainless steel. The mounting base is precision machined for flatness. A blue vinyl handle is included.

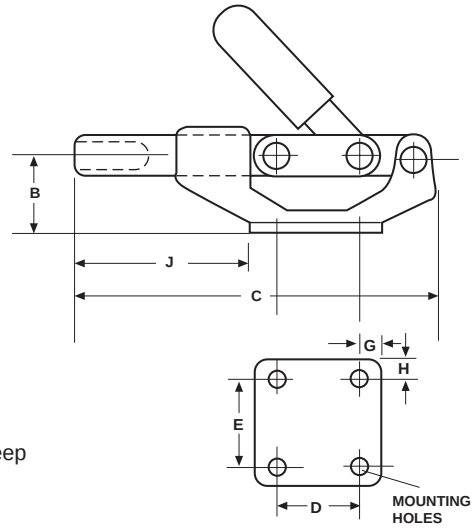

- Holding capacity: 500 lbs.
- Weight: 14 oz.
- Plunger travel: 1 3/16"
- Plunger tapped: 5/16-18 X 1 1/8" deep

Part Number	B	C	D	E	G	H	J	Mounting Holes
70810	1	4 3/4	1 3/8	1 5/8	5/16	5/16	2 1/4	9/32
70815	1	4 3/4	1 7/16	1 5/16	5/16	5/16	2 1/4	7/32

70830

Same construction as 70810 with larger capacity. The base has 11/32" diameter holes for 5/16" screws. A blue vinyl handle is included.

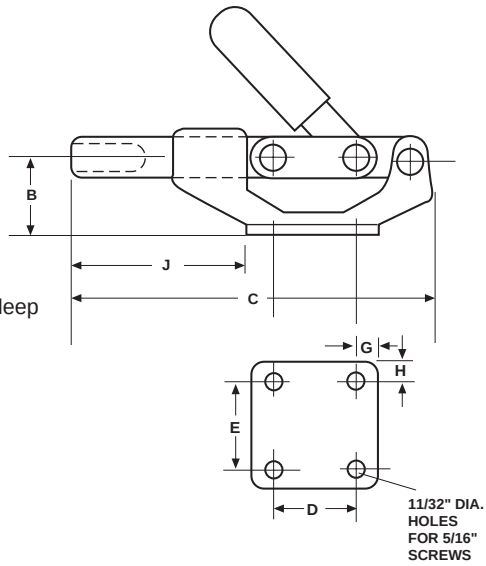

- Holding capacity: 850 lbs.
- Weight: 1 lb., 4 oz.
- Plunger travel: 1 5/8"
- Plunger tapped: 3/8-16 X 1 1/8" deep

Part Number	B	C	D	E	G	H	J
70830	1 1/4	6 1/4	1 5/8	1 5/8	5/16	5/16	3

For accessories see page 161. For interchangeability with other toggle clamps, see page 184.

Straight Line

70850

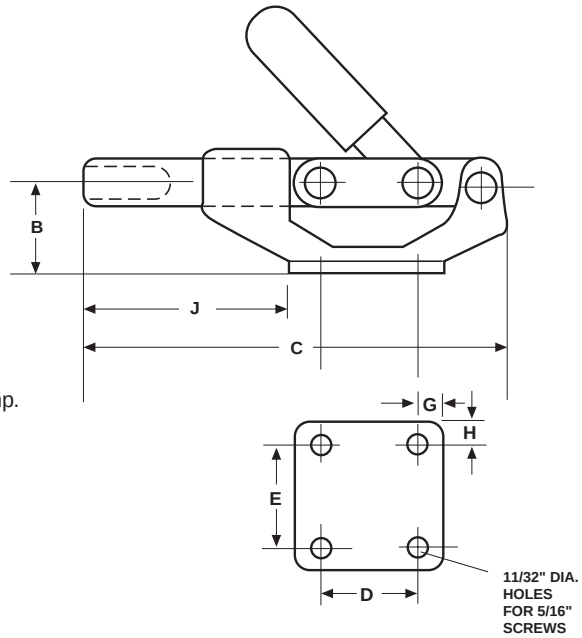

Same construction as 70810 with three times the holding capacity. Our most powerful straight line action toggle clamp. A blue vinyl handle is included.

- Holding capacity: 1500 lbs.
- Weight: 3 lb.
- Plunger travel: 2 11/32"
- Plunger tapped: 1/2-13 X 1 1/2" deep

Part Number	B	C	D	E	G	H	J
70850	1 3/4	9 1/2	2	2	3/8	3/8	4 5/8

70818

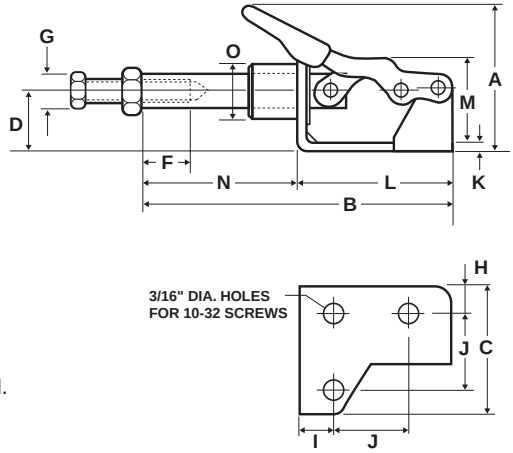

This light duty clamp is equipped with an 8-32 tapped plunger. A blue vinyl handle is included.

- Holding capacity: 90 lbs.
- Weight: 1.5 oz.
- Plunger travel: 5/8"
- Plunger tapped: 8-32 X 15/32" deep

Part Number	A	B	C	D	F	G	H	I	J	K	L	M	N	O
70818	1 7/32	2 21/32	1 1/16	1/2	15/32	1/4	7/32	5/16	5/8	3/32	1 11/32	13/16	1 9/32	7/16

For accessories see page 161. For interchangeability with other toggle clamps, see page 184.

Jergens
SPECIALTY FASTENERS GROUP

Straight Line

70820

This popular plunger style clamp can be used for push and pull clamping. The rivet in the handle can be removed allowing the clamp to be set in either the push or pull position. A blue vinyl handle is included.

- Holding capacity: 300 lbs.
- Weight: 10 oz.
- Plunger travel: 1 1/4"
- Plunger tapped: 5/16-18 X 1" deep

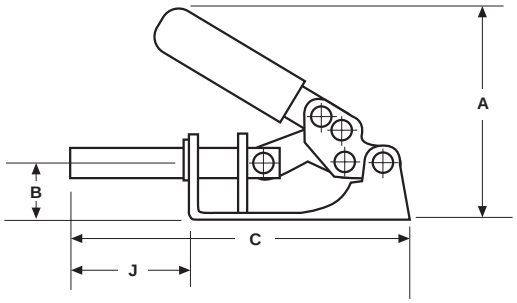

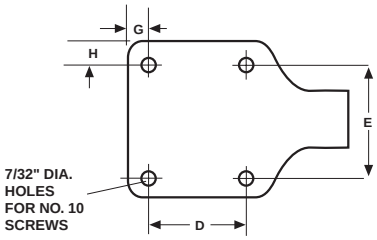

Part Number	A	B	C	D	E	G	H	J
70820	3 5/16	31/32	5 7/16	1 3/8	1 5/8	9/32	9/32	1 15/16

70840

The heavy duty construction of the clamp is ideal for hard to hold applications. The plunger locks in both push and pull positions with maximum pressure. A blue vinyl handle is included.

- Holding capacity: 800 lbs.
- Weight: 1 lb., 12 oz.
- Plunger travel: 1 5/8"
- Plunger tapped: 3/8-16 X 1" deep

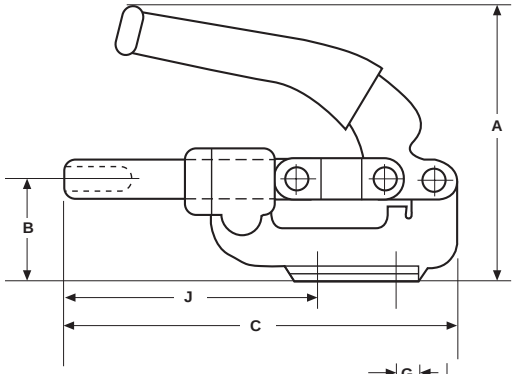

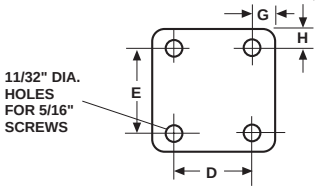

Part Number	A	B	C	D	E	G	H	J	Base Type
70840	4 9/16	1 3/4	6 3/4	1 5/8	1 5/8	5/16	5/16	4 3/16	Flange

For accessories see page 161. For interchangeability with other toggle clamps, see page 184.

Straight Line

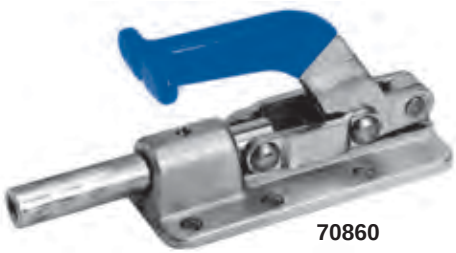

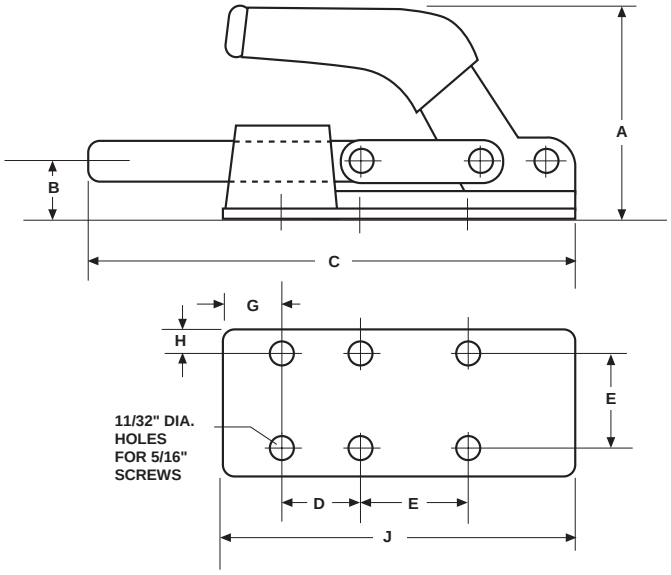

The forged steel construction enables this powerful plunger-style clamp to perform on rugged, heavy duty applications. Handle locks in both push and pull positions. A blue vinyl handle is included.

- Holding capacity: 2500 lbs.
- Weight: 2 lbs., 2 oz.
- Plunger travel: 2"
- Plunger tapped: 3/8-16 X 1 1/4" deep

Part Number	A	B	C	D	E	G	H	J	Base Type
70860	2 7/8	13/16	7 1/16	1 3/8	1 5/8	1/2	5/16	5 1/16	Flange

For accessories see page 161. For interchangeability with other toggle clamps, see page 184.

Squeeze Action — Forged Jaws

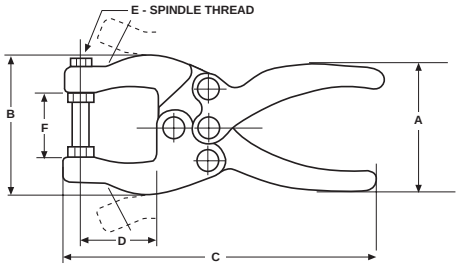

These forged steel, squeeze action, plier clamps can be used in a wide range of applications. Ideal for clamping, fixturing, holding, processing, or positioning. All models are supplied with spindle assemblies.

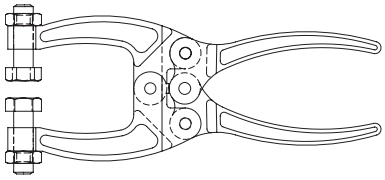

2 Spindle Version

Part Number	2 Spindle Part Number	A	B	C	D	E	F	Holding Capacity (lbs.)	Spindle Type	Trigger Release	Wt. (oz.)
70710	**71049**	1 15/16	2 1/16	4 1/2	1 1/8	1/4-20	1	200	Standard	No	5
70720	**71050**	1 7/8	2 13/16	6	1 3/4	5/16-18	1 1/4	350	Standard	No	8
70730	**—**	2 11/16	2 7/8	8 1/16	2 9/32	5/16-18	1/2	700	Standard	Yes	16
70740	**70745**	2 11/16	4 1/4	8 1/2	2 3/4	3/8-16	1 3/4	700	Standard	Yes	19
70750	**—**	2 11/16	4 3/4	8 1/2	2 3/4	3/8-16	3	700	Standard	Yes	22

Note: F dimension will be less if spindle and locknut are used.

70710
Supplied with 70927 Spindle Assembly

71049 Supplied with 2 Spindle Assemblies (Not Shown)

70720
Supplied with 70946 Spindle Assembly

71050 Supplied with 2 Spindle Assemblies (Not Shown)

70730
Supplied with 70945 Spindle Assembly

70740
Supplied with 70913 Spindle Assembly

70745 (not shown)
Supplied with (2) 70912 Spindle Assembly

70750
Supplied with 70913 and 70914 Spindle Assemblies

Adjustable Spindle Assemblies

Hex Head Adjustable Spindle Assemblies

Vinyl Coated Hex Head Adjustable Spindle Assemblies

Neoprene Cap-Flat Tipped Adjustable Spindle Assemblies

Swivel Foot Adjustable Spindle Assemblies

Part Number	Description
70962	8-32 x 27/32 Nylon Hex Head
70916	8-32 x 3/4 Hex Head*
70945	5/16-18 x 1 1/8 Hex Head
70946	5/16-18 x 1 3/4 Hex Head
70912	3/8-16 x 1 1/4 Hex Head
70913	3/8-16 x 3 Hex Head
70903	1/2-13 x 3 Hex Head
70942	5/8-11 x 4 1/2 Hex Head
70963	8-32 x 1 1/4 Vinyl Coated Hex Head
70927	1/4-20 x 1 1/2 Vinyl Coated Hex Head
70926	1/4-20 x 1 3/4 Neoprene Cap Flat Tipped
70918	1/4-20 x 1 15/16 Neoprene Cap Flat Tipped
70947	5/16-18 x 2 1/4 Neoprene Cap Flat Tipped
70949	5/16-18 x 3 Neoprene Cap Flat Tipped
70915	3/8-16 x 3 1/4 Neoprene Cap Flat Tipped
70917	10-32 x 1 3/8 Neoprene Cap Flat Tipped
70948	5/16-18 x 2 3/4 Swivel Foot
70914	3/8-16 x 3 Swivel Foot

***Nuts not included**

Flanged Washers for U-Bar Clamps Only

Flanged Washers for U-Bar Clamps

Part Number	Description
70960	#8 For Vertical Handle Models
70925	1/4
70944	5/16
70911	3/8
70902	1/2
70941	5/8

Bolt Retainer

Bolt Retainers For Solid Bar Clamps

Part Number	Description
70943	5/16
70910	3/8
70901	1/2
70940	5/8

HDV Series Heavy Duty Vertical Clamps

Features:

All **HDV** series clamps are designed to be adaptable and durable, and to withstand abuse in heavy duty applications.

The **HDV** series have a phosphated corrosion resistant finish.

Models HDV660WW, HDV1500WW, HDV2600WW and HDV5200WW comprise a basic toggle mechanism onto which can be welded at the desired angle the clamping arm and handle which can be specified as accessories. These models feature a swivel base which is welded at the desired angle to the mechanism, and then welded either directly to a fixture, or alternatively to a base which is offered as an accessory for bolt mounting.

Models HDV660SW, HDV1500SW, HDV2600SW and HD-V5200SW share all the features of the above models, but with a straight base which can be directly bolt mounted or welded to a fixture, or alternatively to the accessory base for bolt mounting.

Models HDV660SW, HDV1500SS, HDV2600SS and HDV5200SS are similar to the type 'T' models, but with a handle with a PVC grip fitted vertically, and a longer stub clamping arm which can be modified and the spindle retainer supplied welded in the desired position.

Models HDV660SW, HDV1500FA, HDV2600FA and HDV5200FA feature a flanged base with holes for bolt mounting, a handle with PVC grip fitted vertically, and a fixed spindle or setscrew position which does not require welding.

Specifications:

The main components are of steel, the forked lower handles being precision alloy steel castings, and all axles of hardened steel running in either hardened bushes or directly in the close-toleranced holes of hardened parts. The clamps are finished chemi-black.

Installation:

When welding the swivel base of the 'Stub Nose' models to the clamp mechanism ensure that the full length of the adjoining surfaces are welded. Ensure that welding spatter does not enter the slots which form the forward stop of the mechanism.

The handle pivot bolt may be adjusted if required to remove excess free play from the mechanism.

Frequent lubrication will extend the life of the clamp.

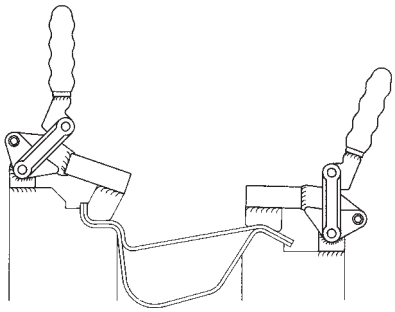

Hold Down Vertical

Part Number
72120

Model HDV660/WW

Arm: Stub nose for welded extension
Base: Swivel for welding in the desired position
Nominal Holding Force: 660 lbs.
Weight: 6 oz.

See "Features and Installation Information" on page 162 for Installation Instructions.

See page 165 for accessories and handles.

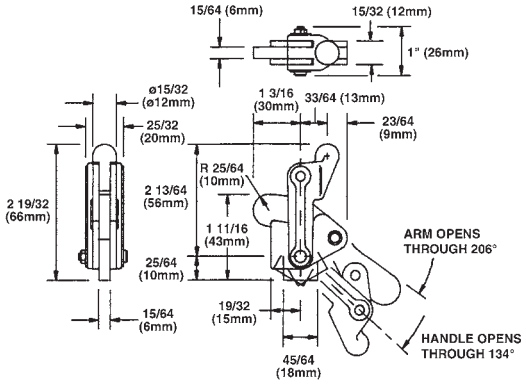

Part Number
72101

Model HDV660/SW

Arm: Stub nose for welded extension
Base: Straight
Nominal Holding Force: 660 lbs.
Weight: 6 oz.

See "Features and Installation Information" on page 162 for Installation Instructions.

See page 165 for accessories and handles.

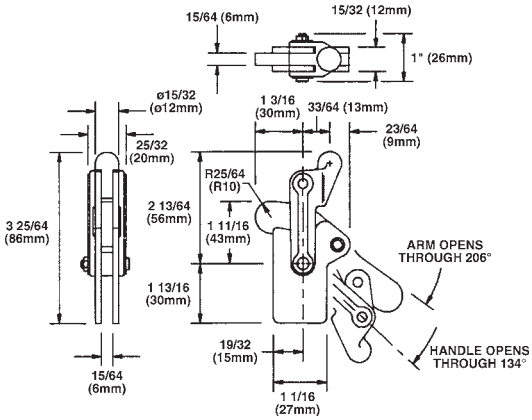

Part Number
72102

Model HDV660/FW

Arm: Stub nose for welded extension
Base: Flanged
Nominal Holding Force: 660 lbs.
Weight: 7 oz.

See page 165 for accessories and handles.

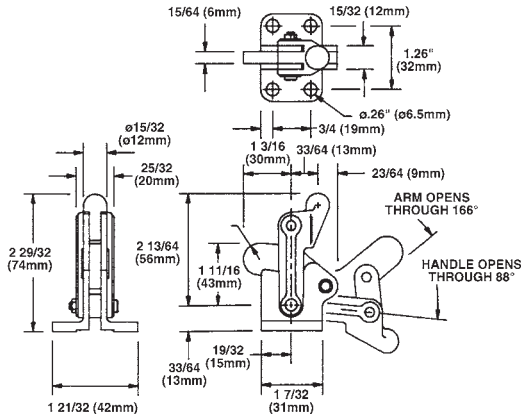

Hold Down Vertical

Part Number
72103

Model HDV660/SA

Arm: The spindle is adjustable along the arm
Base: Straight
Nominal Holding Force: 660 lbs.
Weight: 9 oz.
Supplied complete with: Set screw & nuts, Flanged washer

See page 165 for accessories and handles.

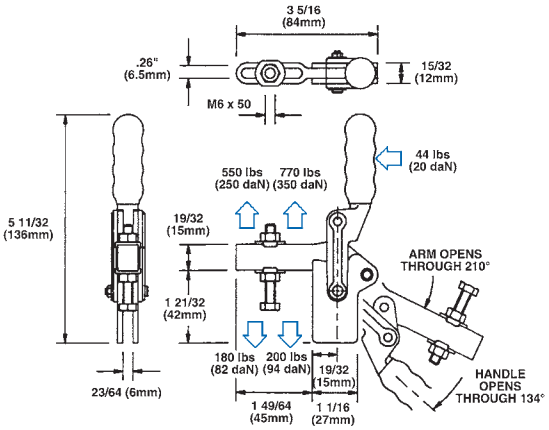

Part Number
72104

Model HDV660/FA

Arm: The spindle is adjustable along the arm
Base: Flanged
Nominal Holding Force: 660 lbs.
Weight: 9 oz.
Supplied complete with: Set screw & nuts, Flanged washer

See page 165 for accessories and handles.

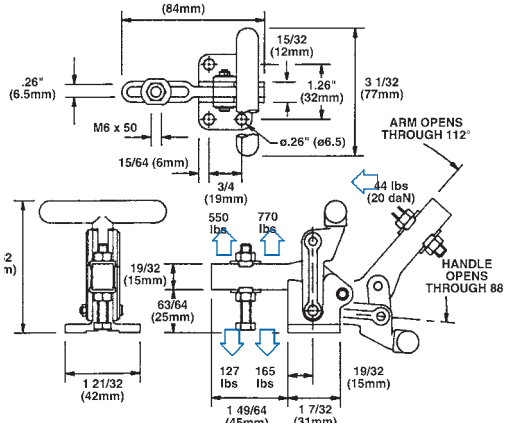

Part Number
72105

Model HDV660/FA2

Arm: The spindle is adjustable along the arm
Base: Flanged
Nominal Holding Force: 660 lbs.
Weight: 9 oz.
Supplied complete with: Set screw & nuts, Flanged washer

See page 165 for accessories and handles.

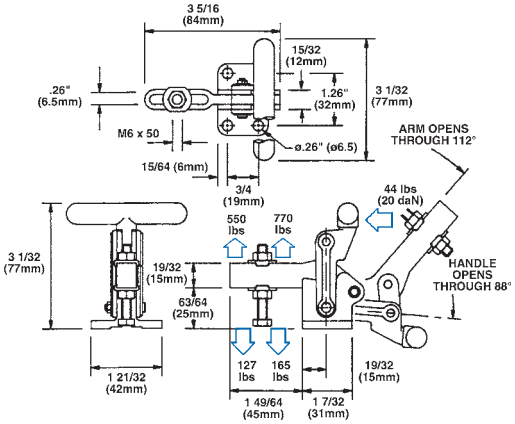

Hold Down Vertical

HDV660 Series Accessories

Part No. 72130
Handle: For welding at the desired angle to HDV660/WW & HDV660/SW
Weight: 2 oz.

Part No. 72131
Grip: To fit Part No. 72130 handle
Weight: 0.5 oz.

Part No. 72132
Arm: For extending the stub arms of HDV660/WW & HDV660/SW
Weight: 3 oz.

Part No. 72133
Base: For bolt mounting HDV660/WW & HDV660/SW
Weight: 2 oz.

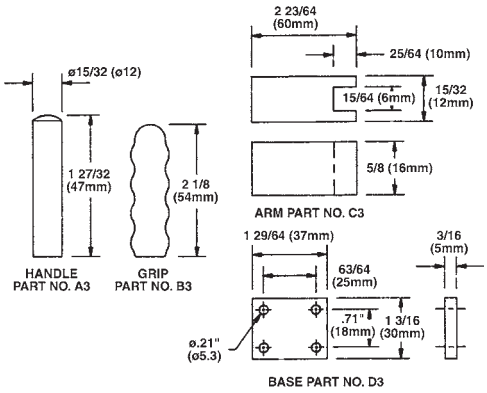

Part Number
72121

Model HDV1500/WW

Arm: Stub nose for welded extensions
Base: Swivel for welding in the desired position
Nominal Holding Force: 1,543 lbs.
Weight: 1lb 7 oz.

See "Features and Installation Information" on page 162 for Installation Instructions.

See page 166 for accessories and handles.

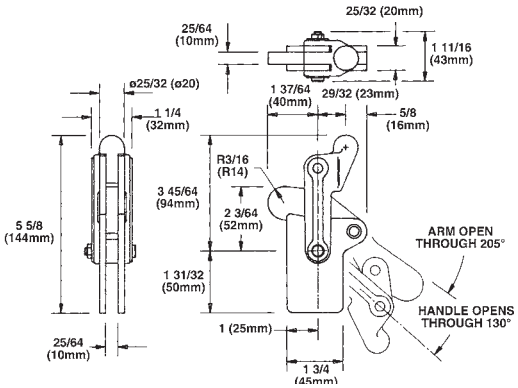

Part Number
72106

Model HDV1500/SW

Arm: Stub nose for welded extensions
Base: Straight
Nominal Holding Force: 1,543 lbs.
Weight: 1lb 9 oz.

See "Features and Installation Information" on page 162 for Installation Instructions.

See page 166 for accessories and handles.

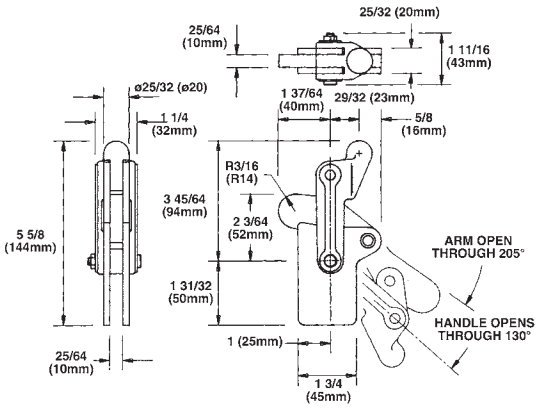

Jergens
SPECIALTY FASTENERS GROUP

Hold Down Vertical

Part Number
72107

Model HDV1500/SS

Arm: Solid arm
Base: Straight
Nominal Holding Force: 1,543 lbs.
Weight: 2 lbs 5 oz.
Supplied complete with: Spindle retainer, Setscrew & nuts

See below for accessories and handles.

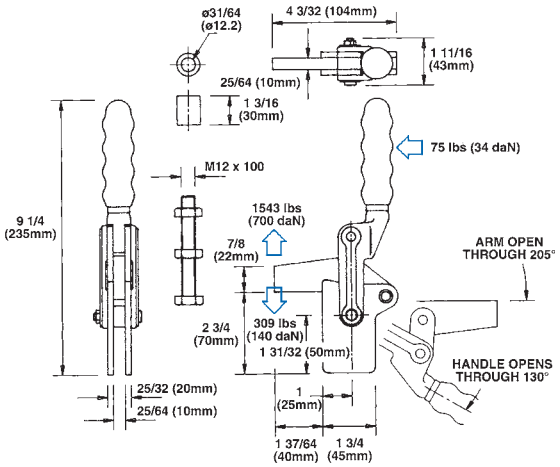

Part Number
72108

Model HDV1500/FA

Arm: The spindle is in a fixed position
Base: Flanged
Nominal Holding Force: 1,543 lbs.
Weight: 2 lbs 9 oz.
Supplied complete with: Setscrew & nuts

See below for accessories and handles.

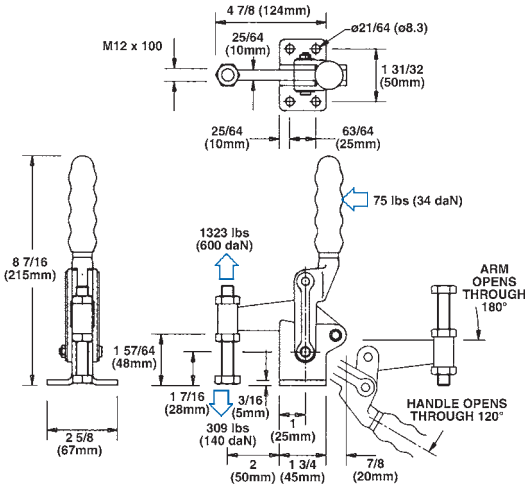

HDV1500 Series Accessories

Part No. 72140
Handle: For welding at the desired angle to HDV1500/WW & HDV1500/SW
Weight: 5.3 oz.

Part No. 72141
Grip: To fit Part No. 72140 handle
Weight: 0.3 oz.

Part No. 72142
Arm: For extending the stub arms of HDV1500/WW & HDV1500/SW
Weight: 5.5 oz.

Part No. 72143
Base: For bolt mounting VHDV1500/WW & HDV1500/SW
Weight: 3 oz.

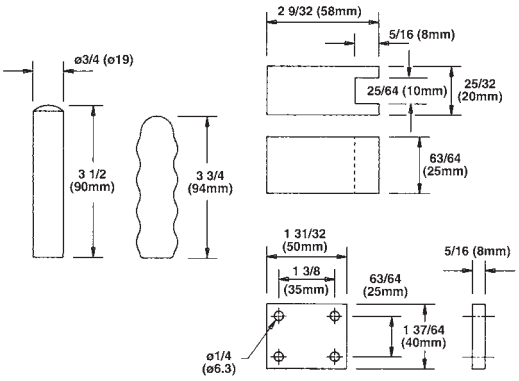

Hold Down Vertical

Part Number
72122

Model HDV2600/WW

Arm: Stub nose for welded extensions
Base: Swivel for welding in the desired position
Nominal Holding Force: 2,646 lbs.
Weight: 2 lbs 10 oz.

See "Features and Installation Information" on page 162 for Installation Instructions.

See page 168 for accessories and handles.

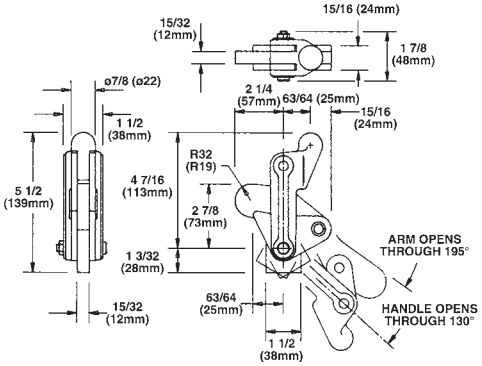

Part Number
72109

Model HDV2600/SW

Arm: Stub nose for welded extensions
Base: Straight
Nominal Holding Force: 2,646 lbs.
Weight: 3 lbs 2 oz.

See "Features and Installation Information" on page 162 for Installation Instructions.

See page 168 for accessories and handles.

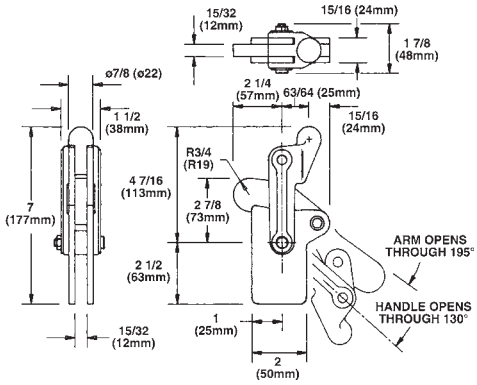

Part Number
72110

Model HDV2600/SS

Arm: Solid arm
Base: Straight
Nominal Holding Force: 2,646 lbs.
Weight: 4 lbs.
Supplied complete with: Spindle retainer, Setscrew & nuts

See page 168 for accessories and handles.

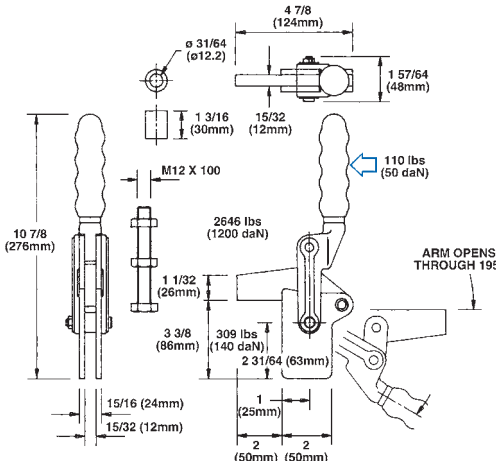

Jergens
SPECIALTY FASTENERS GROUP

Hold Down Vertical

Part Number
72111

Model HDV2600/FA

Arm: The spindle is in a fixed position
Base: Flanged
Nominal Holding Force: 2,646 lbs.
Weight: 4 lbs 4 oz.
Supplied complete with: Setscrew & nuts

See below for accessories and handles.

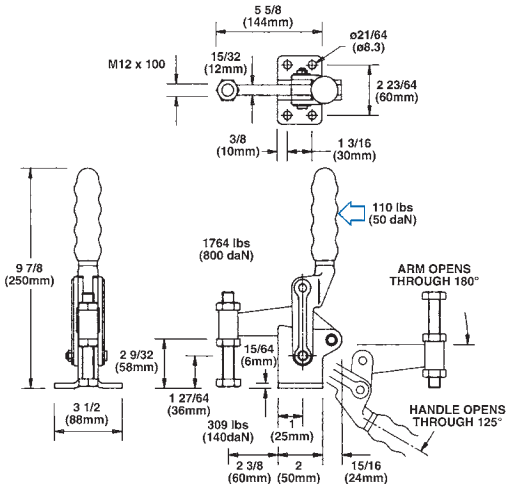

HDV2600 Series Accessories

Part No. 72150
Handle: For welding at the desired angle to HDV2600/WW & HDV2600/SW
Weight: 8 oz.

Part No. 72151
Grip: To fit Part No. 72150 handle
Weight: 0.3 oz.

Part No. 72152
Arm: For extending the stub arms of HDV2600/WW & HDV2600/SW
Weight: 11 oz.

Part No. 72153
Base: For bolt mounting HDV2600/WW & HDV2600/SW
Weight: 4 oz.

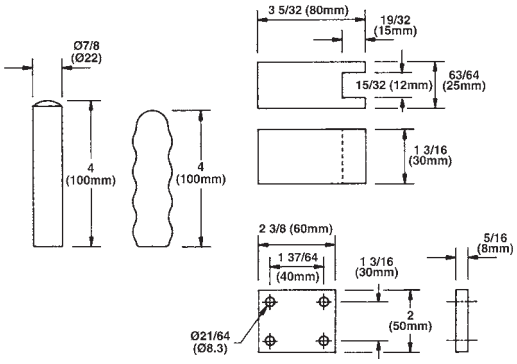

Hold Down Vertical

Part Number
72123

Model HDV5200/WW

Arm: Stub nose for welded extensions
Base: Swivel for welding in the desired position
Nominal Holding Force: 5,291 lbs.
Weight: 6 lbs 4 oz.

See "Features and Installation Information" on page 162 for Installation Instructions.

See page 170 for accessories and handles.

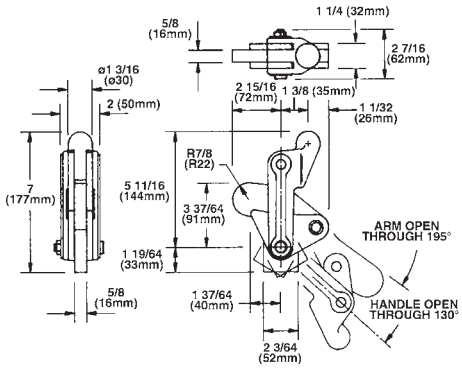

Part Number
72112

Model HDV5200/SW

Arm: Stub nose for welded extensions
Base: Straight
Nominal Holding Force: 5,291 lbs.
Weight: 7 lbs 1 oz.

See "Features and Installation Information" on page 162 for Installation Instructions.

See page 170 for accessories and handles.

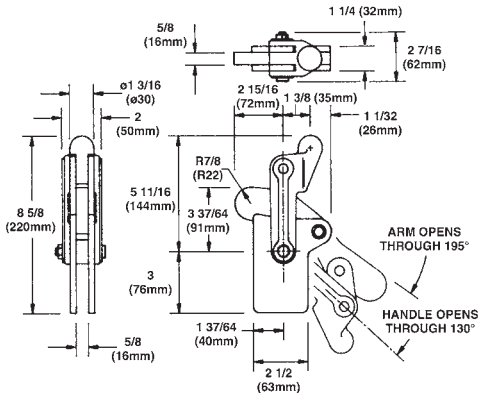

Part Number
72113

Model HDV5200/SS

Arm: Solid arm
Base: Straight
Nominal Holding Force: 5,286 lbs.
Weight: 8 lbs 3 oz.
Supplied complete with: Spindle retainer, Setscrew & nuts

See page 170 for accessories and handles.

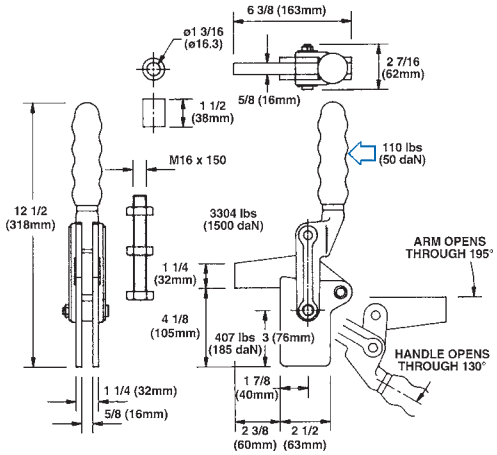

Hold Down Vertical

Part Number
72114

Model HDV5200/FA

Arm: The spindle is in a fixed position
Base: Flanged
Nominal Holding Force: 5,286 lbs
Weight: 9 lbs.
Supplied complete with: Setscrew & nuts

See below for accessories and handles.

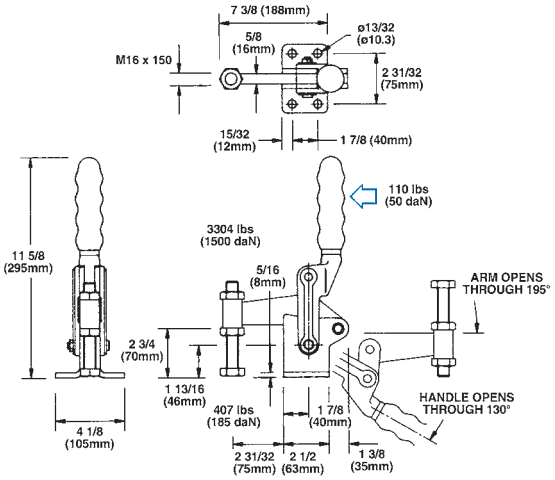

HDV5200 Series Accessories

Part No. 72170
Handle: For welding at the desired angle to HDV5200/WW & HDV5200/SW
Weight: 10.3 oz.

Part No. 72171
Grip: To fit Part No. 72170 handle
Weight: 4 oz.

Part No. 72172
Arm: For extending the stub arms of HDV5200/WW & HDV5200/SW
Weight: 1 lb 8 oz.

Part No. 72173
Base: For bolt mounting HDV5200/WW & HDV5200/SW
Weight: 7 oz.

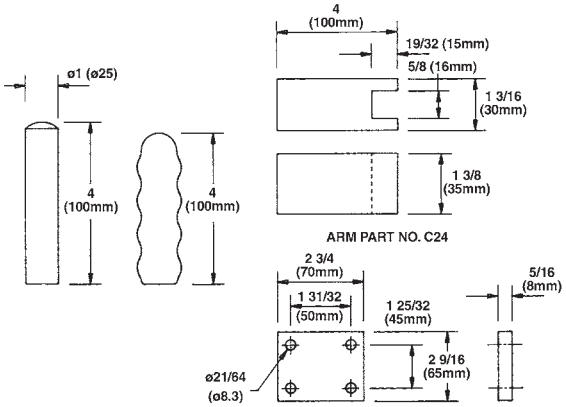

Vertical Cam Clamps

Features:

Cam clamps are similar to vertical clamps but the clamping force is generated not by a toggle linkage, but by the action of a roller on a cam.

The cam action allows components of differing thickness to be clamped without readjustment of the clamping spindle.

Model JCV155/FF can clamp parts with thickness varying by up to 1/16", and models JCV550/FF and JCV770/FF thickness varying by up to 5/64".

A comfortable, cushioned PVC handle grip is fitted to all three models of cam clamp.

Specifications:

The main components are of zinc plated and passivated steel, the cam and its roller being case hardened to resist wear.

Rivets are of stainless steel, which burnishes and work-hardens with use, the rivets of models JCV550/FF and JCV770/FF rotating in hardened bushes. The setscrews are made of steel.

Jergens
SPECIALTY FASTENERS GROUP

Vertical Cam Clamps

Part Number
72160

Model JCV/155/FF

Arm: The spindle is in a fixed position
Base: Flanged
Nominal Holding Force: 165 lbs.
Weight: 1.3 oz.
Supplied complete with: Setscrew & nuts

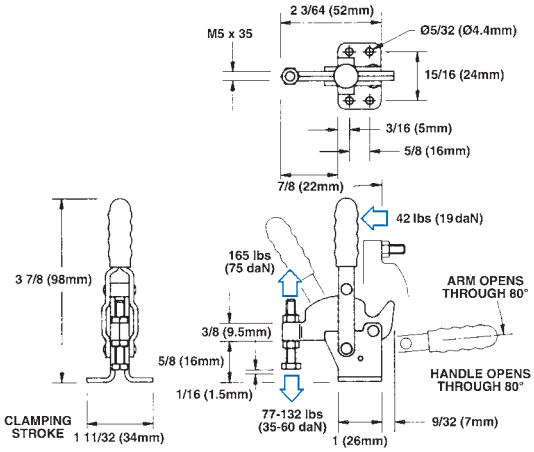

Part Number
72161

Model JCV550/FF

Arm: The spindle is in a fixed position
Base: Flanged
Nominal Holding Force: 550 lbs.
Weight: 9 oz.
Supplied complete with: Setscrew & nuts

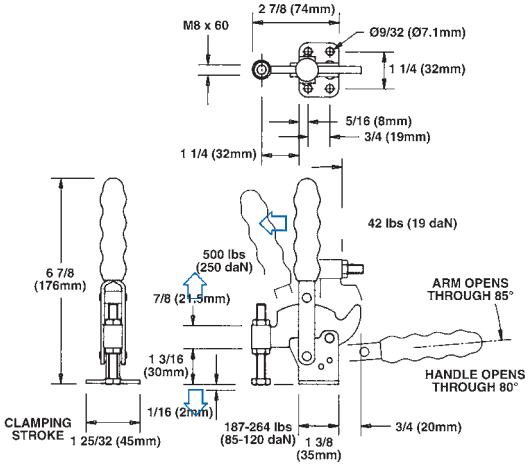

Part Number
72162

Model JCV770/FF

Arm: The spindle is in a fixed position
Base: Flanged
Nominal Holding Force: 770 lbs.
Weight: 1 lb 6 oz.
Supplied complete with: Setscrew & nuts

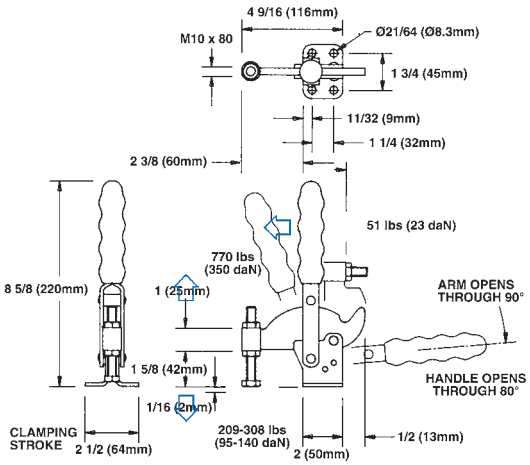

Heavy-Duty & Long-Handled Push-Pull Clamps

- **Low profile handle**
- **Heavy duty link**
- **Ribbed housing povides extra protection against side impact**
- **Locks in both foward and rear position**

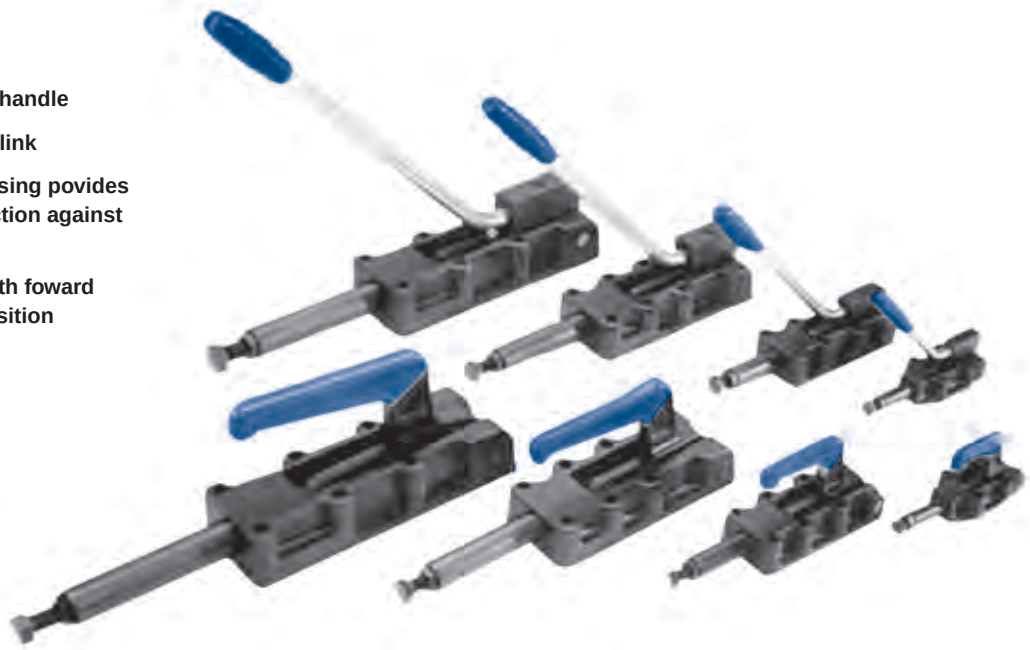

Features:

These clamps are of exceptionally robust construction featuring cast and machined handles and bases. The clamps are designed with a low plunger height and with the mechanism guarded within the base to avoid finger traps.

Models HDP1300, HDP2600, HDP5500, and HDP11000 have handles of normal length for clamping. The long handled 'L' versions (HDP1300/L, HDP5500/L, and HDP11000/L) have their handles either to the front or rear of the clamp according to the application and produce high forces which make them suitable for clamping or for light work such as swaging, rivetting, press fitting components, etc. All models are fitted with a comfortable, cushioned PVC handle grip.

Specifications:

The bases of all models, and the handles of models HDP1300, HDP2600, HDP5500, and HDP11000 are machined cast iron.

The handles of the 'L' versions are of steel bar and mount in housings which are either machined steel castings or machined from steel bar.

The plungers are of steel, and their precision ground diameter runs in a close-toleranced hole in the base casting.

All axles are of hardened steel and run in either the cast iron of the handle, or in the close-toleranced holes of hardened parts.

All models are supplied with a steel setscrew.

Heavy-Duty & Long-Handled Push-Pull Clamps

Part Number
72201

Model HDP1300

Plunger: Locks at both extended & retracted ends of the stroke
Base: Body mounting
Nominal Holding Force: 1,322 lbs.
Weight: 1 lb
Supplied complete with:
Setscrew & nut

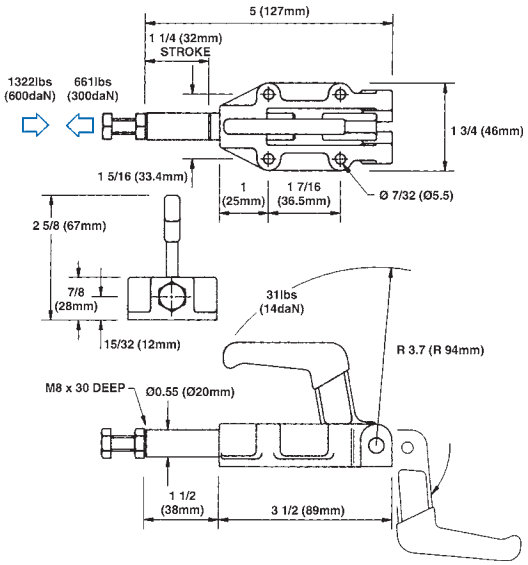

Part Number
72202

Model HDP2600

Plunger: Locks at both extended & retracted ends of the stroke
Base: Body mounting
Nominal Holding Force: 2,643 lbs.
Weight: 3 lbs
Supplied complete with:
Setscrew & nut

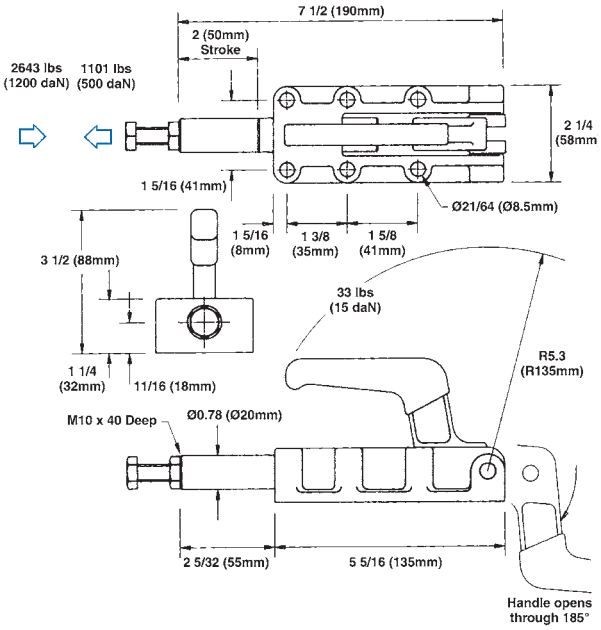

Heavy-Duty & Long-Handled Push-Pull Clamps

Part Number
72203

Model HDP5500

Plunger: Locks at both extended & retracted ends of the stroke
Base: Body mounting
Nominal Holding Force: 5,507 lbs
Weight: 8 lbs
Supplied complete with: Setscrew & nut

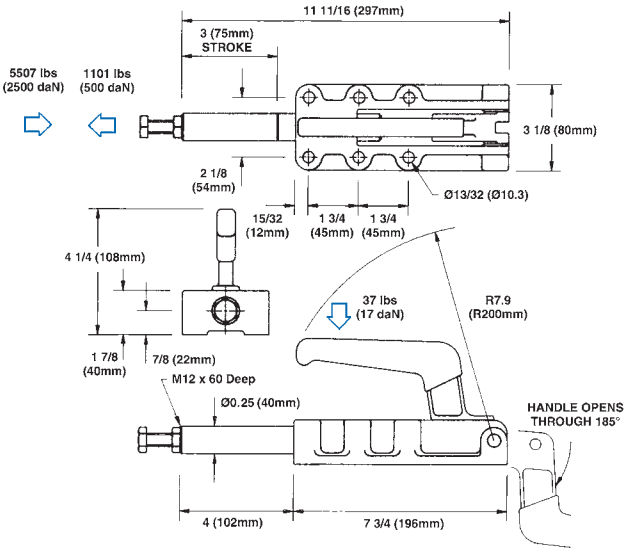

Part Number
72204

Model HDP11000

Plunger: Locks at both extended & retracted ends of the stroke
Base: Body mounting
Nominal Holding Force: 11,013 lbs
Weight: 13 lbs 6 oz.
Supplied complete with: Setscrew & nut

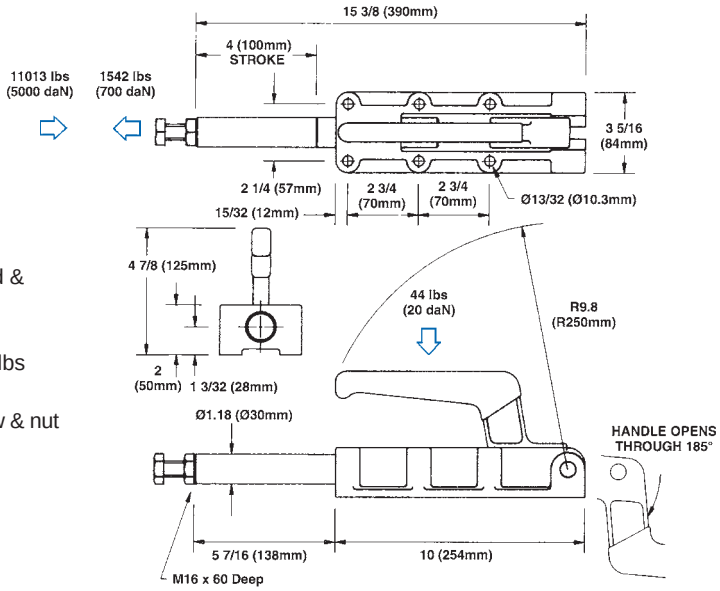

Heavy-Duty & Long-Handled Push-Pull Clamps

Part Number
72205

Model HDP1300/L

With 31 lbs handle force the output force is:

		lbs
Fully retracted		1,035
0.197 extended		242
0.394	,,	154
0.591	,,	165
0.787	,,	176
1.00	,,	187
1.180	,,	322
1.219	,,	419
Fully extended		1,277

Plunger: Locks at both extended & retracted ends of the stroke
Base: Body mounting
Nominal Holding Force: 1,322 lbs
Weight: 1 lb 2 oz.
Supplied complete with: Setscrew & nut

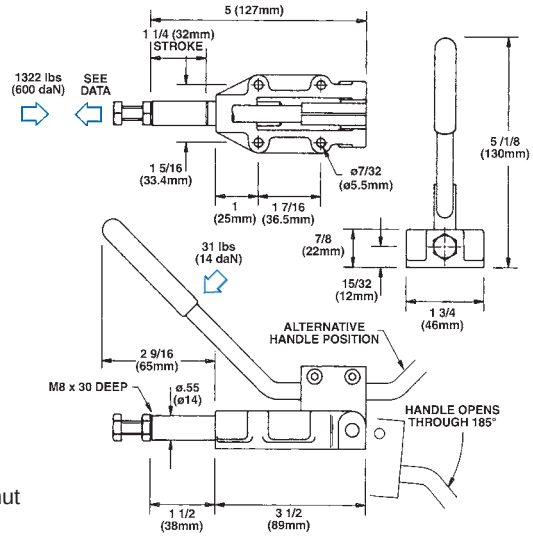

Part Number
72206

Model HDP2600/L

With 33 lbs handle force the output force is:

		lbs
Fully retracted		1,553
0.197 extended		368
0.394	,,	198
0.591	,,	161
0.787	,,	154
1.00	,,	159
1.180	,,	187
1.377	,,	220
1.573	,,	242
1.769	,,	330
1.887	,,	485
1.926	,,	639
Fully extended		2,048

Plunger: Locks at both extended & retracted ends of the stroke
Base: Body mounting
Nominal Holding Force: 2,643 lbs
Weight: 3 lbs 6 oz.
Supplied complete with: Setscrew & nut

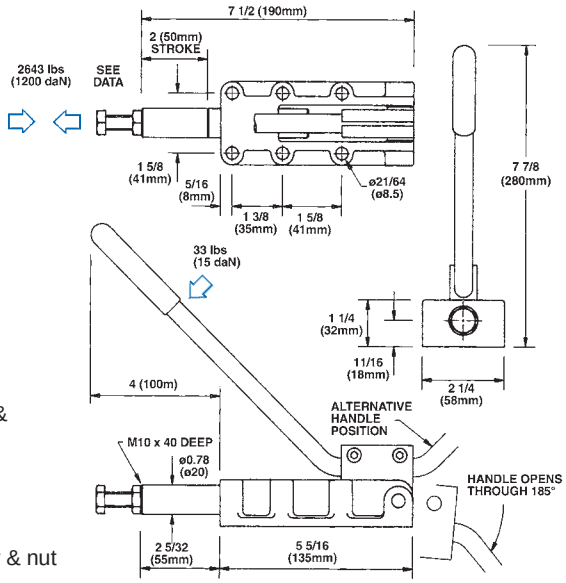

Heavy-Duty & Long-Handled Push-Pull Clamps

Part Number
72207

Model HDP5500/L

With 37 lbs handle force the output force is:

		lbs
Fully retracted		2,203
0.394 extended		220
0.787	,,	159
1.180	,,	132
1.573	,,	154
1.970	,,	194
2.364	,,	260
2.758	,,	419
2.836	,,	507
2.915	,,	778
Fully extended		2,423

Plunger: Locks at both extended & retracted ends of the stroke
Base: Body mounting
Nominal Holding Force: 5,507 lbs.
Weight: 9 lbs 1 oz.
Supplied complete with: Setscrew & nut

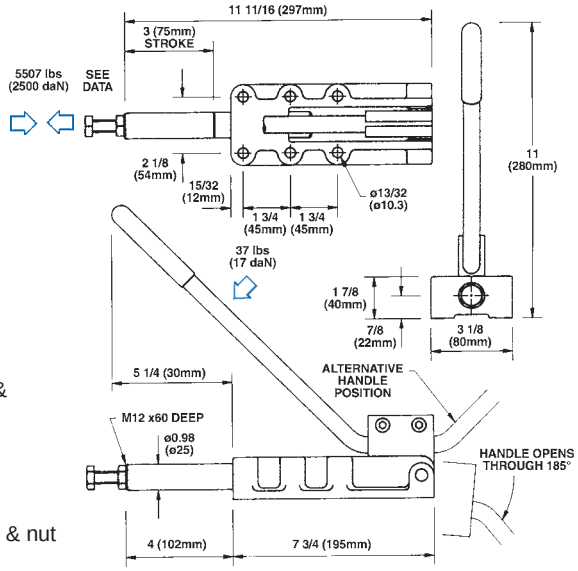

Part Number
72208

Model HDP11000/L

With 44 lbs handle force the output force is:

		lbs
Fully retracted		2,423
0.394 extended		397
0.787	,,	242
1.180	,,	165
1.573	,,	176
1.970	,,	181
2.364	,,	220
2.758	,,	220
3.152	,,	286
3.546	,,	419
3.743	,,	551
3.821	,,	683
3.900	,,	991
Fully extended		2,665

Plunger: Locks at both extended & retracted ends of the stroke
Base: Body mounting
Nominal Holding Force: 11,013 lbs.
Weight: 15 lbs 6 oz.
Supplied complete with: Setscrew & nut

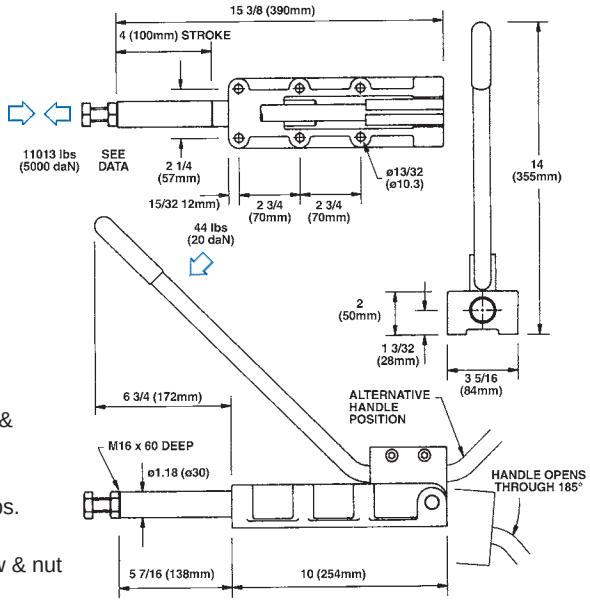

Horizontal Latch Clamps

Features:

Latch clamps are available in two sizes. Bracket holes will not elongate over time. They have a small footprint for space constrained applications.

All latch clamps are fitted with PVC handle grips.

Specifications:

The HDL Series clamps have precision cast steel bases and latch brackets with cast iron handles. The finish is black oxide.

Installation:

It is important that the clamp and latch bracket are in alignment when viewed from both the top and the side to ensure that the clamp locks over center correctly.

The 'U' bolt should be adjusted to ensure an equal pull on either side.

Horizontal Latch Clamps

Part Number
72301

Model HDL4400

Nominal Holding Force: 4,405 lbs
Weight: 3 lbs 1 oz.
Supplied complete with: Latch Bracket as shown

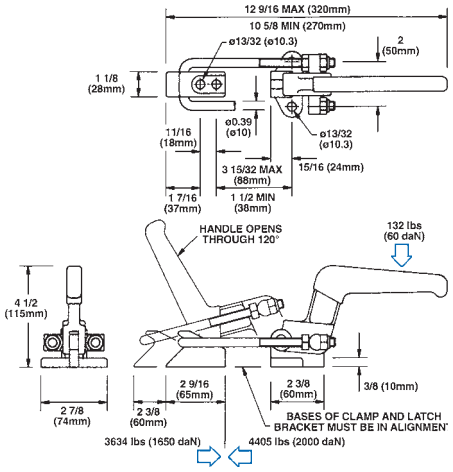

Part Number
72302

Model HDL8800

Nominal Holding Force: 8,811 lbs
Weight: 5 lbs 9 ozs.
Supplied complete with: Latch Bracket as shown

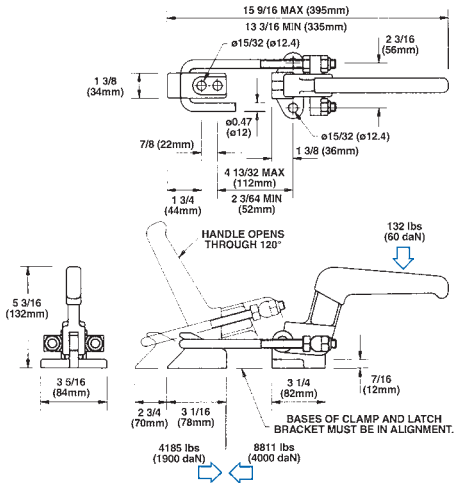

Magna Force Heavy Duty Cam Clamps

- Unique, patented range of cam clamps
- Rugged build quality, ideal for machine shops
- Clamping forces from 660 lbs to 11,000 lbs
- Significant cost benefits over strap clamps in repetitive machining
- A fraction of the cost of hydraulic workholding

Heavy Duty Cam Clamps

Part Number
72401
72402

Model HDC8800R (Clockwise)
HDC8800RB (Counter Clockwise)

Operating clamping force: 1,680 lbs (hand applied), 9,000 lbs (mallet applied)
Weight: 1.21 lbs

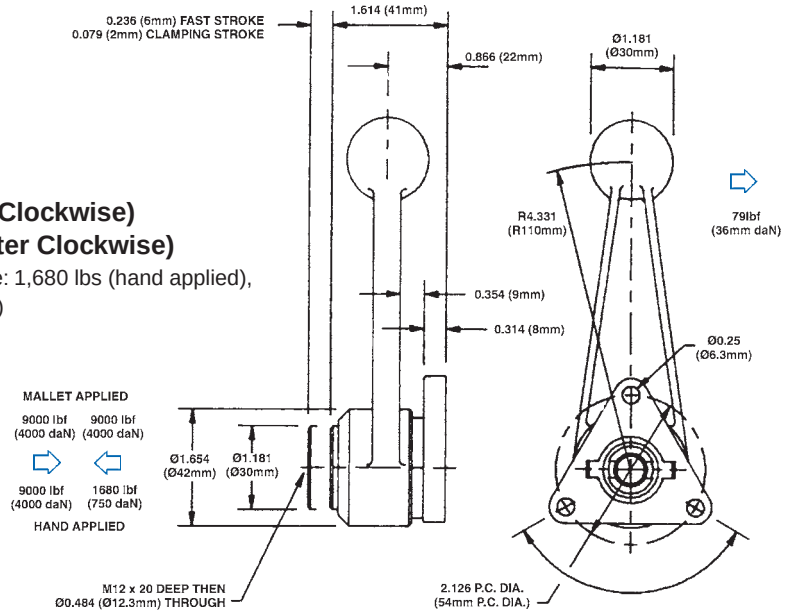

Part Number
72403
72404

Model
HDC11000R (Clockwise)
HDC11000RB (Counter Clockwise)

Operating clamping force: 1,900 lbs (hand applied), 11,240 lbs (mallet applied)
Weight: 2.9 lbs

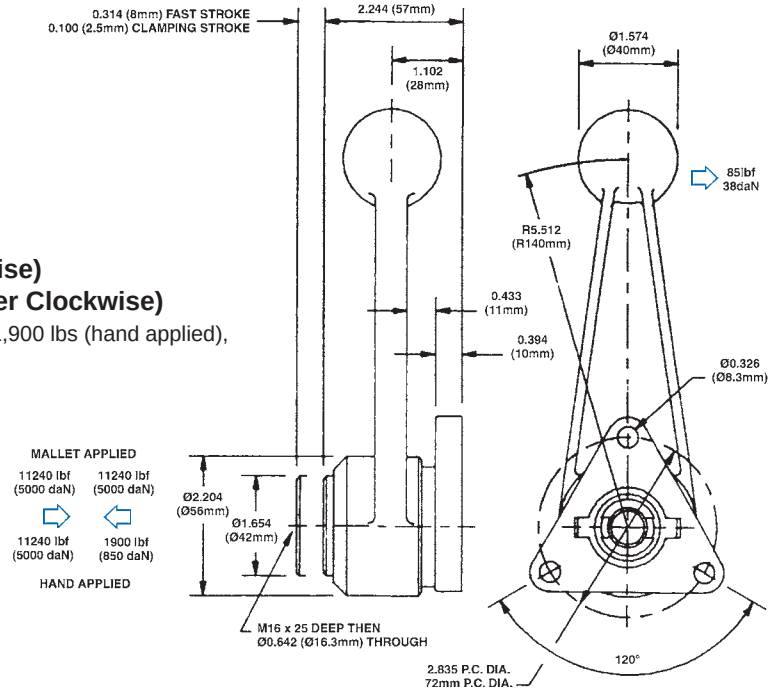

Part Number	Applied Handle Force (Hand Push)	Clamping Force	Clamping Force using Mallet Blows	Daylight Travel	Clamping Travel
72401	81 lbs	1686 lbs	8992 lbs	0.236	0.079
72402	81 lbs	1686 lbs	8992 lbs	0.236	0.079
72403	85 lbs	1910 lbs	11240 lbs	0.315	0.100
72404	85 lbs	1910 lbs	11240 lbs	0.315	0.100

Heavy Duty Cam Swing Clamps

Part Number
72405
72406

Model
HDC675S (Clockwise)
HDC675SB (Counter Clockwise)
Operating clamping force: 675 lbs (hand applied)
Weight: 0.4 lbs
Supplied complete with: Set screw & nuts

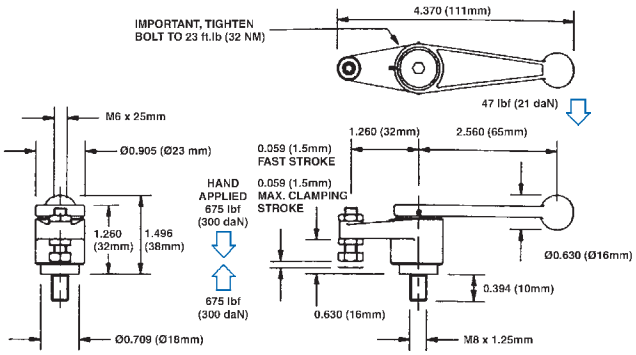

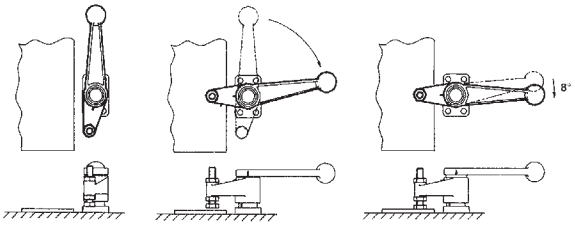

Fig. 1 Fig. 2 Fig. 3

Part Number
72407
72408

Model
HDC1800S (Clockwise)
HDC1800SB (Counter Clockwise)
Operating clamping force: 1,120 lbs (hand applied), 1,800 lbs (mallet applied)
Weight: 0.9 lbs
Supplied complete with: Set screw & nuts

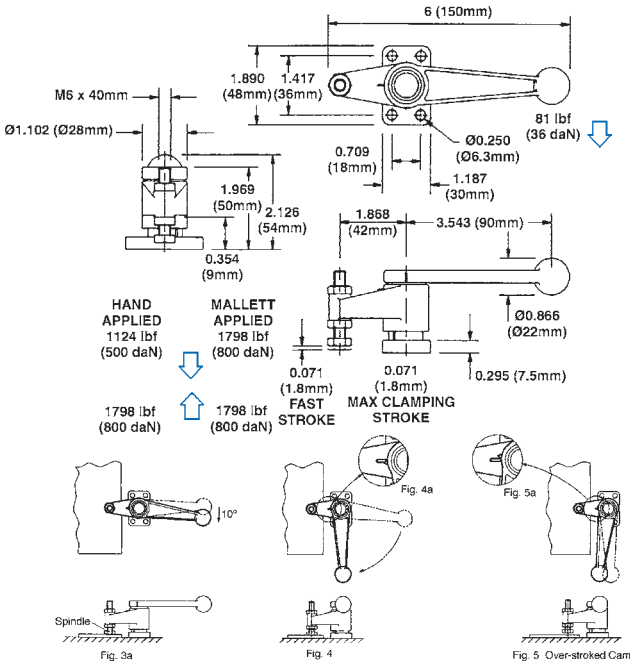

Part Number	Applied Handle Force (Hand Push)	Clamping Force	Clamping Force using Mallet Blows	Daylight Travel	Clamping Travel
72405	47 lbs	674 lbs	N/A	0.059	0.059
72406	47 lbs	674 lbs	N/A	0.059	0.059
72407	81 lbs	1124 lbs	1800 lbs	0.070	0.070
72408	81 lbs	1124 lbs	1800 lbs	0.070	0.070

Jergens
SPECIALTY FASTENERS GROUP

Heavy Duty Cam Swing Clamps

Part Number
72409
72410

Model
HDC2600S (Clockwise)
HDC2600SB (Counter Clockwise)
Operating clamping force:
1,350 lbs (hand applied),
2,700 lbs (mallet applied)
Weight: 2 lbs
Supplied complete with: Setscrew & nuts

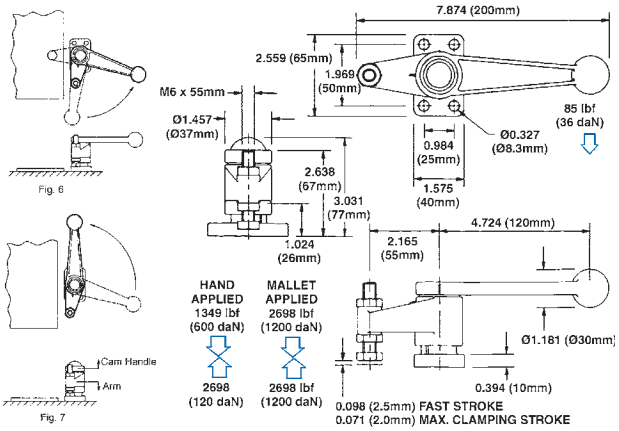

Heavy Duty Cam Push Clamps

Model HDC3300P
Operating clamping force:
3,370 lbs (mallet applied),
1,350 lbs (hand applied)
Weight: 0.6 lbs
Supplied complete with:
Set screw & nuts, Mounting base and locknuts

Part Number
72411

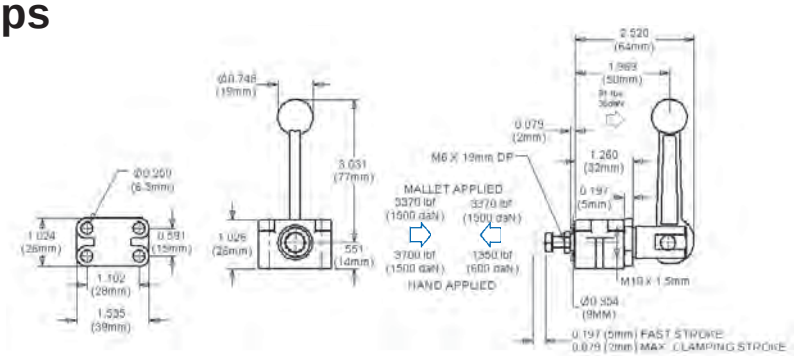

Model HDC4400P
Operating clamping force:
4500 lbs (mallet applied),
1,460 lbs (hand applied)
Weight: 1.3 lbs
Supplied complete with:
Set screw & nuts
CMB24 Mounting base & locknuts

Part Number
72412

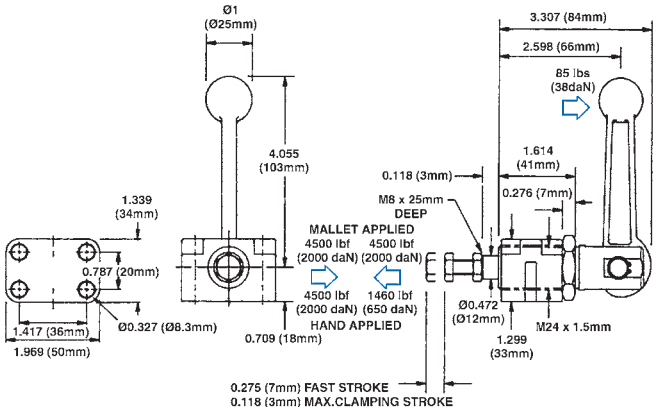

Part Number	Applied Handle Force (Hand Push)	Clamping Force	Clamping Force using Mallet Blows	Daylight Travel	Clamping Travel
72409	85 lbs	1350 lbs	2700 lbs	0.098	0.079
72410	85 lbs	1350 lbs	2700 lbs	0.098	0.079
72411	81 lbs	1350 lbs	3370 lbs	0.205	0.087
72412	85 lbs	1460 lbs	4500 lbs	0.276	0.118

Heavy Duty Cam Push Clamps

Part Number
72413

Model HDC6750P

Operating clamping force: 6,750 lbs (mallet applied), 1,460 lbs (hand applied)
Weight: 3.4 lbs
Supplied complete with: Set screw & nuts.
Mounting base & locknuts

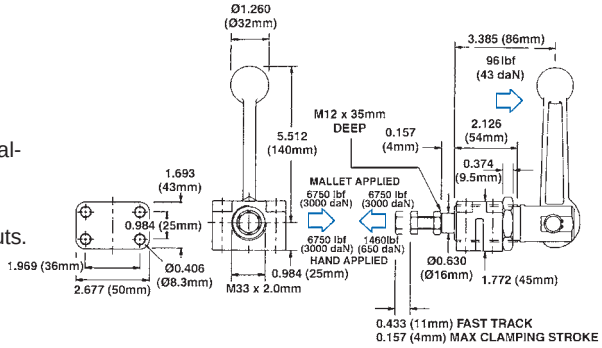

Part Number
72414

Model HDC3300PL

Operating clamping force: 3,370 lbs
Weight: 0.8 lbs
Supplied complete with: Set screw & nuts, Mounting base & locknuts

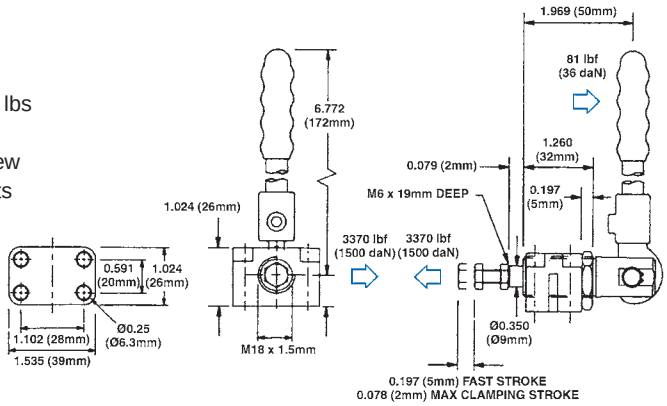

Part Number
72415

Model HDC4400PL

Operating clamping force: 3,820 lbs
Weight: 1.7 lbs
Supplied complete with: Set screw & nuts
Mounting base & locknuts,
Nominal holding force: 4,500 lbs

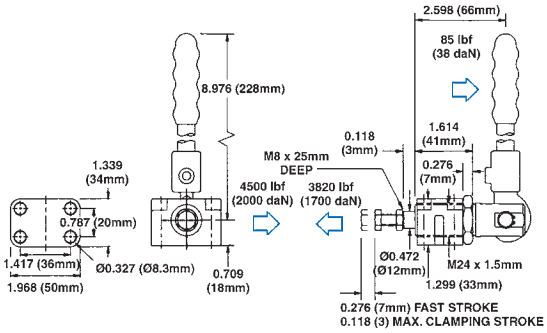

Part Number	Applied Handle Force (Hand Push)	Clamping Force	Clamping Force using Mallet Blows	Daylight Travel	Clamping Travel
72413	97 lbs	1460 lbs	6750 lbs	0.433	0.157
72414	81 lbs	3370 lbs	N/A	0.205	0.087
72415	85 lbs	3820 lbs	N/A	0.276	0.118

Jergens
SPECIALTY FASTENERS GROUP

Heavy Duty Cam Push Clamps

Model HDC6750PL
Operating clamping force: 4,500 lbs
Weight: 4.4 lbs
Supplied complete with: Set screw & nuts,
Mounting base & locknuts
Nominal holding force: 6,740 lbs

Part Number
72416

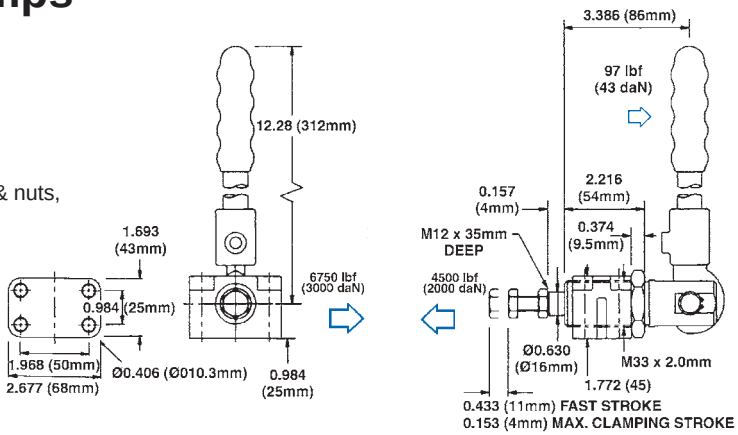

Part Number	Applied Handle Force (Hand Push)	Clamping Force	Clamping Force using Mallet Blows	Daylight Travel	Clamping Travel
72416	97 lbs	4,500 lbs	N/A	0.433	0.157

Conversion Chart Part Numbers

Jergens	Carr Lane	Jergens	Carr Lane	Jergens	Carr Lane	Jergens	Carr Lane
70118	CL-150-TPC	**70380**	CL-450-VTC	**71019**	—	**72109**	—
70120	CL-250-TPC	**70385**	CL-451-VTC	**71020**	—	**72110**	—
70140	CL-350-TPC	**70390**	CL-452-VTC	**71021**	—	**72111**	—
70210	CL-150-HTC	**70395**	CL-453-VTC	**71022**	—	**72112**	—
70211	CL-153-HTC	**70420**	CL-550-VTC	**71023**	—	**72113**	—
70215	CL-151-HTC	**70425**	CL-551-VTC	**71024**	—	**70745**	CL-254-PL-2
70230	CL-250-HTC	**70430**	CL-552-VTC	**71025**	—	**70750**	CL-454-PL
70231	CL-253-HTC	**70440**	CL-650-VTC	**71026**	—	**70810**	CL-100-PC
70235	CL-251-HTC	**70445**	CL-651-VTC	**71027**	—	**70815**	—
70240	CL-350-HTC	**70450**	CL-652-VTC	**71028**	—	**70818**	CL-50-SPC
70245	CL-351-HTC	**70460**	CL-750-VTC	**71029**	—	**70820**	CL-150-SPC
70250	CL-450-HTC	**70470**	CL-850-VTC	**71030**	CL-751-VTC	**70830**	CL-200-PC
70255	CL-451-HTC	**70480**	CL-950-VTC	**71031**	CL-851-VTC	**70840**	CL-250-SPC
70260	CL-260-HTC	**70490**	CL-1050-VTC	**71032**	—	**70850**	CL-300-PC
70262	—	**70550**	CL-150-PA	**71033**	—	**71042**	CL-210-PA
70264	—	**70555**	CL-170-PA	**71034**	—	**70860**	CL-350-SPC
70270	CL-550-HTC	**70558**	CL-100-PA	**71035**	—	**71001**	CL-152-HTC
70275	CL-551-HTC	**70560**	CL-200-PA	**71037**	CL-375-HTC	**71002**	CL-250-HTC-S
70280	CL-200-VTC	**70562**	CL-300-PA	**71039**	CL-350-PA	**71003**	CL-252-HTC
70285	CL-475-HTC	**70565**	CL-310-PA	**71040**	CL-100-PA-S	**71004**	CL-260-HTC-S
70310	CL-150-VTC	**70570**	CL-250-PA	**71041**	CL-110-PA	**71005**	—
70315	CL-151-VTC	**70575**	CL-352-PL-S	**71049**	CL-50-PL-2	**71006**	CL-350-HTC-S
70320	CL-152-VTC	**70580**	CL-251-PA	**71050**	—	**71007**	—
70330	CL-250-VTC	**70710**	CL-50-PL	**72101**	—	**71008**	CL-300-HTC
70335	CL-251-VTC	**70720**	CL-150-PL	**72102**	—	**71009**	—
70340	CL-252-VTC	**70730**	—	**72103**	—	**71010**	—
70342	CL-253-VTC	**70740**	CL-254-PL	**72104**	—	**71011**	—
70350	CL-350-VTC	**71015**	CL-200-VTC-S	**72105**	—	**71012**	CL-151-VTC-S
70355	CL-351-VTC	**71016**	—	**72106**	—	**71013**	—
70360	CL-352-VTC	**71017**	—	**72107**	—	**71014**	—
70365	CL-353-VTC	**71018**	—	**72108**	—	—	—

Conversion Chart Part Numbers

Jergens	De-Sta-Co	Jergens	De-Sta-Co	Jergens	De-Sta-Co	Jergens	De-Sta-Co
70118	602	**70450**	210-TU	**71014**	201-TB	**72113**	—
70120	604	**70460**	247-S	**71015**	305-USS	**72114**	—
70140	624	**70470**	247-U	**71016**	202-TB	**72120**	—
70210	205-S	**70480**	267	**71017**	202-UB	**72121**	—
70211	205-SL	**70490**	267-U	**71018**	202-TUB	**72122**	—
70215	205-SB	**70550**	301	**71019**	202-TU	**72123**	—
70230	205-U	**70555**	311	**71020**	207-TSB	**72160**	—
70231	205-UL	**70558**	323	**71021**	207-LB	**72161**	—
70235	205-UB	**70560**	331	**71022**	207-TLB	**72162**	—
70240	215-U	**70562**	341	**71023**	207-TL	**72201**	—
70245	215-UB	**70565**	344	**71024**	207-TUB	**72202**	—
70250	225-U	**70570**	351	**71025**	207-ULB	**72203**	—
70255	225-UB	**70575**	325	**71026**	207-TULB	**72204**	—
70260	123-U	**70580**	351-B	**71027**	207-TUL	**72205**	—
70262	217-U	**70710**	424	**71028**	210-TSB	**72206**	—
70264	227-U	**70720**	441	**71029**	210-TUB	**72207**	—
70270	235-U	**70730**	—	**71030**	247-SB	**72208**	—
70275	—	**70740**	462	**71031**	247-UB	**72301**	—
70280	305-U	**70745**	462-2	**71032**	268	**72302**	—
70285	317-U	**70750**	463	**71033**	268-U	**72310**	—
70310	201	**70810**	—	**71034**	—	**72311**	—
70315	201-B	**70815**	603	**71035**	—	**72314**	—
70320	201-T	**70818**	601	**71037**	317-S	**72401**	—
70330	202	**70820**	605	**71039**	381	**72402**	—
70335	202-B	**70830**	608	**71040**	323-MSS	**72403**	—
70340	202-T	**70840**	610	**71041**	324	**72404**	—
70342	202-U	**70850**	—	**71042**	334	**72405**	—
70350	207-S	**70860**	630	**71049**	424-2	**72406**	—
70355	207-SB	**71001**	205-SR	**71050**	441-2	**72407**	—
70360	207-TS	**71002**	205-USS	**72101**	—	**72408**	—
70365	207-L	**71003**	205-UR	**72102**	—	**72409**	—
70380	207-U	**71004**	213-USS	**72103**	—	**72410**	—
70385	207-UB	**71005**	213-UB	**72104**	—	**72411**	—
70390	207-TU	**71006**	215-USS	**72105**	—	**72412**	—
70395	207-UL	**71007**	215-UBSS	**72106**	—	**72413**	—
70420	210-S	**71008**	215-S	**72107**	—	**72414**	—
70425	210-SB	**71009**	215-SB	**72108**	—	**72415**	—
70430	210-TS	**71010**	217-UB	**72109**	—	**72416**	—
70440	210-U	**71011**	227-UB	**72110**	—	**72501**	—
70445	210-UB	**71012**	201-SS	**72111**	—	**72502**	—
—	—	**71013**	201-BSS	**72112**	—	**72503**	—

Jergens
SPECIALTY FASTENERS GROUP

Conversion Chart Part Numbers

Jergens	Good Hand	Jergens	Good Hand	Jergens	Good Hand	Jergens	Good Hand
70118	36202	**70460**	10249	**71015**	13005-SS	**72114**	—
70120	36204	**70470**	10247	**71016**	12075	**72120**	—
70140	36224	**70480**	101JS	**71017**	—	**72121**	—
70210	201-A	**70490**	101-J	**71018**	—	**72122**	—
70211	201-AL	**70550**	43101	**71019**	—	**72123**	—
70215	201-AI	**70555**	—	**71020**	12146	**72160**	—
70230	201	**70558**	40323	**71021**	12147	**72161**	—
70231	201-L	**70560**	431	**71022**	12148	**72162**	—
70235	201-I	**70562**	40341	**71023**	12143	**72201**	—
70240	201-B	**70565**	40344	**71024**	12136	**72202**	—
70245	201-BI	**70570**	451	**71025**	12137	**72203**	—
70250	225-D	**70575**	80325	**71026**	12138	**72204**	—
70255	225-DI	**70580**	452	**71027**	12133	**72205**	—
70260	20752-B	**70710**	50350	**71028**	12300	**72206**	—
70262	21502-B	**70720**	50360	**71029**	12290	**72207**	—
70264	22502-B	**70730**	—	**71030**	10250	**72208**	—
70270	20235	**70740**	50380	**71031**	10248	**72301**	—
70275	—	**70745**	—	**71032**	—	**72302**	—
70280	13005	**70750**	50450	**71033**	—	**72310**	—
70285	20820	**70810**	304-C	**71034**	—	**72311**	—
70310	101-A	**70815**	36003	**71035**	—	**72314**	—
70315	101-AI	**70818**	301-A	**71037**	—	**72401**	—
70320	101-AT	**70820**	302-F	**71039**	43810	**72402**	—
70330	12050	**70830**	304-E	**71040**	40323-SS	**72403**	—
70335	12055	**70840**	36010	**71041**	40324	**72404**	—
70340	12070	**70850**	304-H	**71042**	40334	**72405**	—
70342	12050-U	**70860**	36330	**71049**	—	**72406**	—
70350	12140	**71001**	201-AR	**71050**	—	**72407**	—
70355	12145	**71002**	201-SS	**72101**	—	**72408**	—
70360	12141	**71003**	201-R	**72102**	—	**72409**	—
70365	12142	**71004**	—	**72103**	—	**72410**	—
70380	12130	**71005**	—	**72104**	—	**72411**	—
70385	12135	**71006**	201-BSS	**72105**	—	**72412**	—
70390	12131	**71007**	—	**72106**	—	**72413**	—
70395	12132	**71008**	201-BS	**72107**	—	**72414**	—
70420	12275	**71009**	201-BSI	**72108**	—	**72415**	—
70425	12280	**71010**	—	**72109**	—	**72416**	—
70430	12295	**71011**	—	**72110**	—	**72501**	—
70440	12265	**71012**	101-ASS	**72111**	—	**72502**	—
70445	12270	**71013**	—	**72112**	—	**72503**	—
70450	12285	**71014**	101-AIT	**72113**	—		

We Are Jergens

WORKHOLDING SOLUTIONS

Support, Locate and Hold:

From standard components like toggle screws and T-bolts to vises and quick change fixture systems like Ball Lock® and ZPS.

SPECIALTY FASTENERS

Fasten, Strengthen and Secure:

From threaded inserts and Spinner-Grip™ Flange Nuts & Bolts to Kwik-Lok® Pins.

LIFTING SOLUTIONS

Lift, Turn and Track:

From chain sling and eye bolts to hoist rings and our proprietary Lift ID™ Automated Inspection and Compliance program.

We got our start back in 1942, manufacturing tooling components to help American manufacturers operate quickly and more efficiently. "The Standard Components with the Highest Standards:" This founding philosophy put Jergens on the forefront of the "lean manufacturing" movement before anyone even thought to put those two words together.

In the years since, Jergens has structured its offering to advance the cause of leaner manufacturing, adding products and engineered solutions for an integrated approach to "Manufacturing Efficiency."

You can find Jergens products just about anywhere in the manufacturing environment.

Jergens®
MANUFACTURING EFFICIENCY

Jergens®

MANUFACTURING EFFICIENCY

WORLD HEADQUARTERS USA

15700 S. Waterloo Road, Cleveland, OH 44110-3898
866.KWIK.LOK (594.5565) 216.481.6193
fasteners@jergensinc.com
www.jergensinc.com

WORKHOLDING SOLUTIONS

SPECIALTY FASTENERS

LIFTING SOLUTIONS

DISTRIBUTED BY:

AD0613

© Copyright Jergens, Inc. 2013

NTMA ISA ISO9001:2008 CE