BALLUFF

Products and Services

PRODUCTS FOR EFFICIENT AUTOMATION

Sensors 1
Inductive Sensors, Capacitive Sensors,
Photoelectric Sensors, Magnetic Field Sensors,
Mechanical Cam Switches

1

Innovative solutions

TO MEET YOUR AUTOMATION NEEDS

Plastics, Rubber and Tires
Mobility
Packaging, Foods and Beverages
Energy Generation

INNOVATIVE SOLUTIONS FOR ANY REQUIREMENT

To give you an overview of our range of offerings we have condensed our product portfolio into five volumes. This overview provides a list of topics contained in each volume.

1 — 2

Sensors 1
- Inductive Sensors
- Capacitive Sensors
- Photoelectric Sensors
- Magnetic Sensors
- Mechanical Cam Switches

Sensors 2
- Ultrasonic Sensors
- Magnetically Coded Sensors
- Magnetostrictive Sensors
- Inclination Sensors
- Pressure Sensors
- Temperature Sensors
- Flow Sensors
- Condition Monitoring Sensors

3

- RFID
- Machine Vision and Optical Identification
- Human Machine Interfaces

4

- Safety
- Industrial Networking
- Software and System Solutions
- Power Supplies

5

- Connectivity
- Accessories

Do you need more details? Our Product Finder at www.balluff.com provides you with product-specific information, including technical drawings, data sheets, user guides and more for each individual product. All items are available for download.

CONTENTS

8
SENSORS

Sensors 1

12 Inductive Sensors
282 Capacitive Sensors
342 Photoelectric Sensors
638 Magnetic Field Sensors
680 Mechanical Cam Switches

ALPHANUMERIC INDEX 768

GLOBAL PROJECT MANAGEMENT 792

ABOUT BALLUFF 793

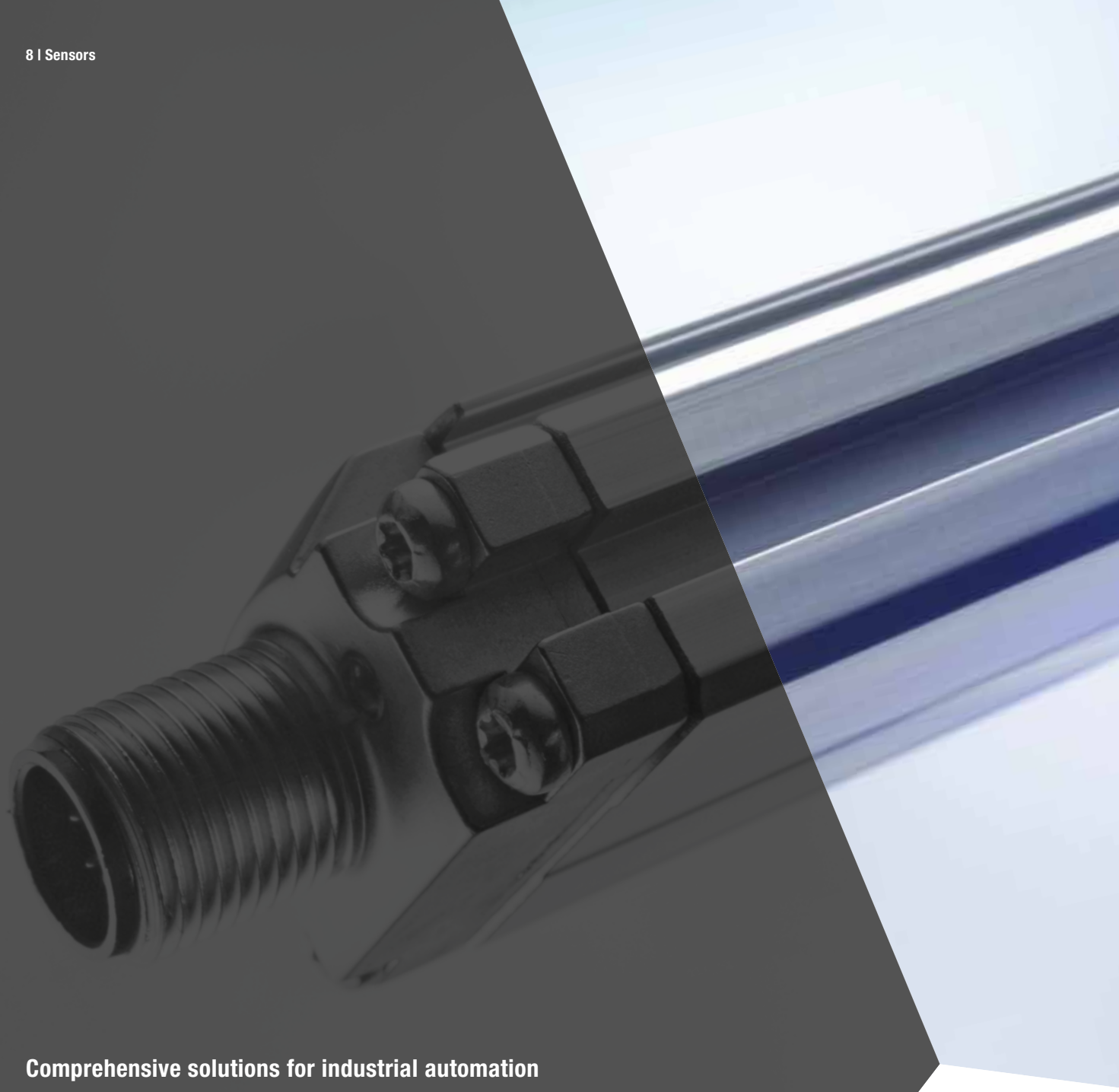

Comprehensive solutions for industrial automation

SENSORS

innovating automation

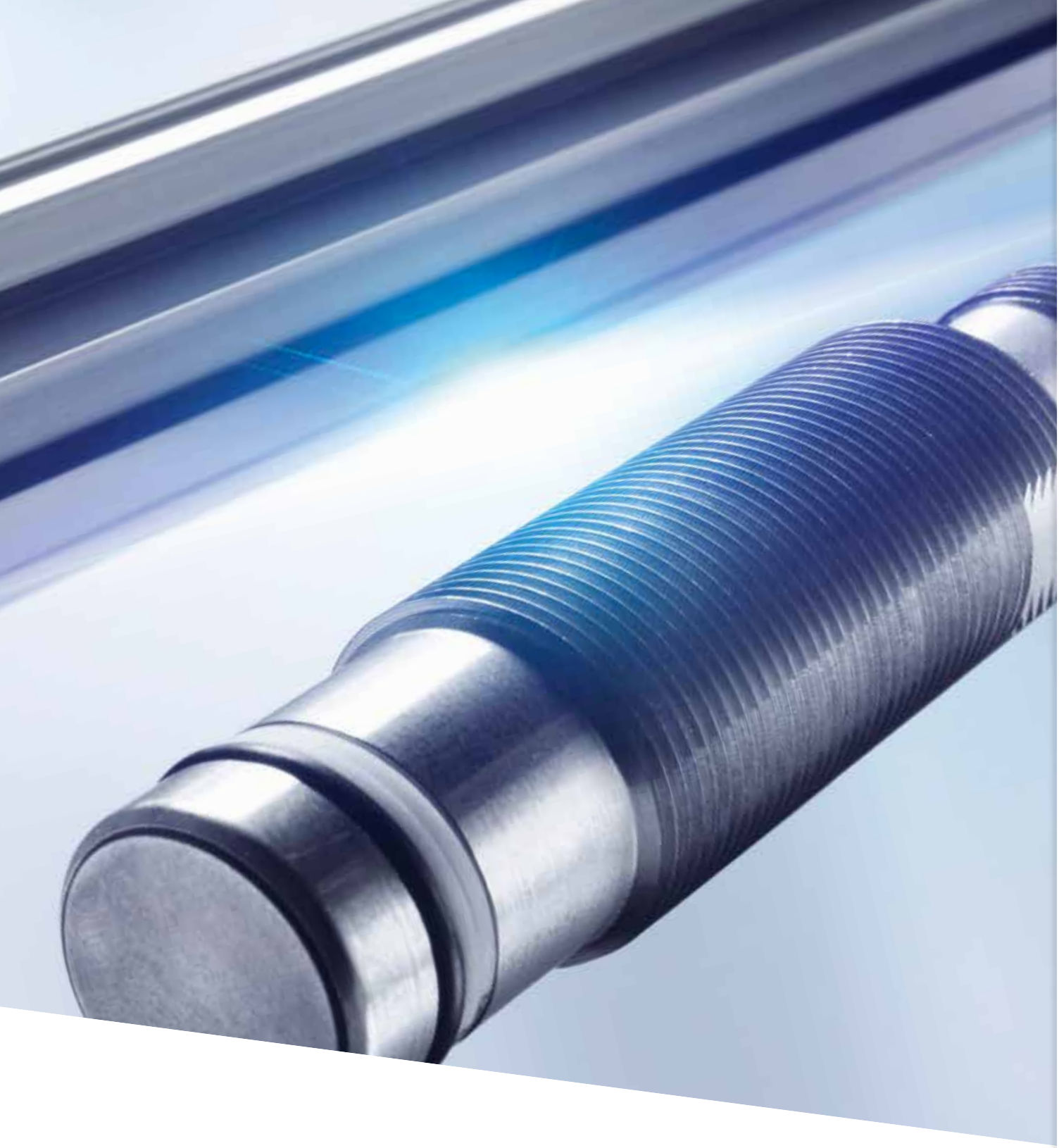

In the field of sensor technology, Balluff handles the entire range of technological diversity with its various operating principles. We provide you with high-quality sensors for any application or requirement: from distance measurement to object detection and level, temperature and pressure monitoring. For everyday industrial uses as well for tough applications in critical environments.

Our quality management regime is DIN EN ISO 9001:2015 certified. All Balluff sensors are tested in our in-house, accredited laboratory. Balluff sensors meet regional as well as international standards and are used throughout the world.

Your Balluff solutions

- Inductive Sensors
- Photoelectric Sensors
- Capacitive Sensors
- Magnetic Sensors
- Ultrasonic Sensors
- Mechanical Cam Switches
- Magnetostrictive Sensors
- Magnetically Coded Sensors
- Inclination Sensors
- Pressure Sensors
- Temperature Sensors
- Flow Sensors

SENSORS 1

12
INDUCTIVE SENSORS

14 Inductive standard sensors with preferred types
138 Inductive 2-wire sensors
156 Pressure-rated inductive sensors
184 Hygienic inductive sensors
188 Inductive Factor 1 sensors
202 Inductive full-metal sensors
210 Magnetic-field-resistant inductive sensors
216 Weld-immune inductive sensors
222 Temperature-rated inductive sensors
236 Inductive sensors for hazardous areas
254 Inductive NAMUR sensors
258 Inductive ring and tube sensors
262 Inductive distance sensors
274 Inductive positioning systems
282 Inductive transducer

284
CAPACITIVE SENSORS

285 Capacitive sensors for object detection
300 Capacitive level sensors without media contac
306 Capacitive level sensors with media contact
332 Capacitive sensor heads for amplifiers
330 Amplifiers for capacitive sensor heads
334 Capacitive sensors with special properties

342
PHOTOELECTRIC SENSORS

344 Diffuse and through-beam sensors
346 Diffuse sensor
374 Function diagrams diffuse sensor
382 Diffuse sensor with background suppression
394 Function diagrams diffuse sensor with background suppression
396 Retroreflective sensors
416 Function diagrams retroreflective sensors
422 Through-beam sensors
446 Function diagrams through-beam sensors
450 Fork sensors
476 Angle sensors
488 Optical windows
498 Light grid
502 Light bands
506 Color sensors
510 Contrast sensors
516 Luminescence sensor
518 Fiber-based devices for plastic and glass fibers
524 Plastic and glass fibers for fiber-based devices
592 Micromote - optical sensor heads
616 Micromote - amplifiers for optical sensor heads
622 Photoelectric distance sensors

638
MAGNETIC FIELD SENSORS

640 Magnetic field positioning system
644 Magnetic field sensors for T-slot
650 Magnetic field sensors for C-slot
656 Magnetic field sensors for multiple slot shapes
662 Magnetic field sensors for tie rod cylinders
666 Single-connector version with two BMF magnetic field sensors
676 Tubular magnetic field sensors

680
MECHANICAL CAM SWITCHES

682 Mechanical position switches
684 Mechanical multiple position switches
690 Mechanical multiple position switches with quick-change plunger block
692 Mechanical position switches with safety switch positions
694 Mechanical multiple position limit switches with safety switch positions
698 Mechanical multiple position limit switches with safety switch positions and quick-change plunger block
700 Mechanical position switches with positive opening
702 Mechanical multiple position switches with positive opening
704 High-temperature resistant row position switch
706 Inductive position switches
708 Inductive multiple position switches
713 Inductive switch elements with sensing head and hybrid switch element with mechanical plunger and inductive processing

728
BASICS AND GLOSSARY

Highest quality and accuracy for automation

INDUCTIVE SENSORS

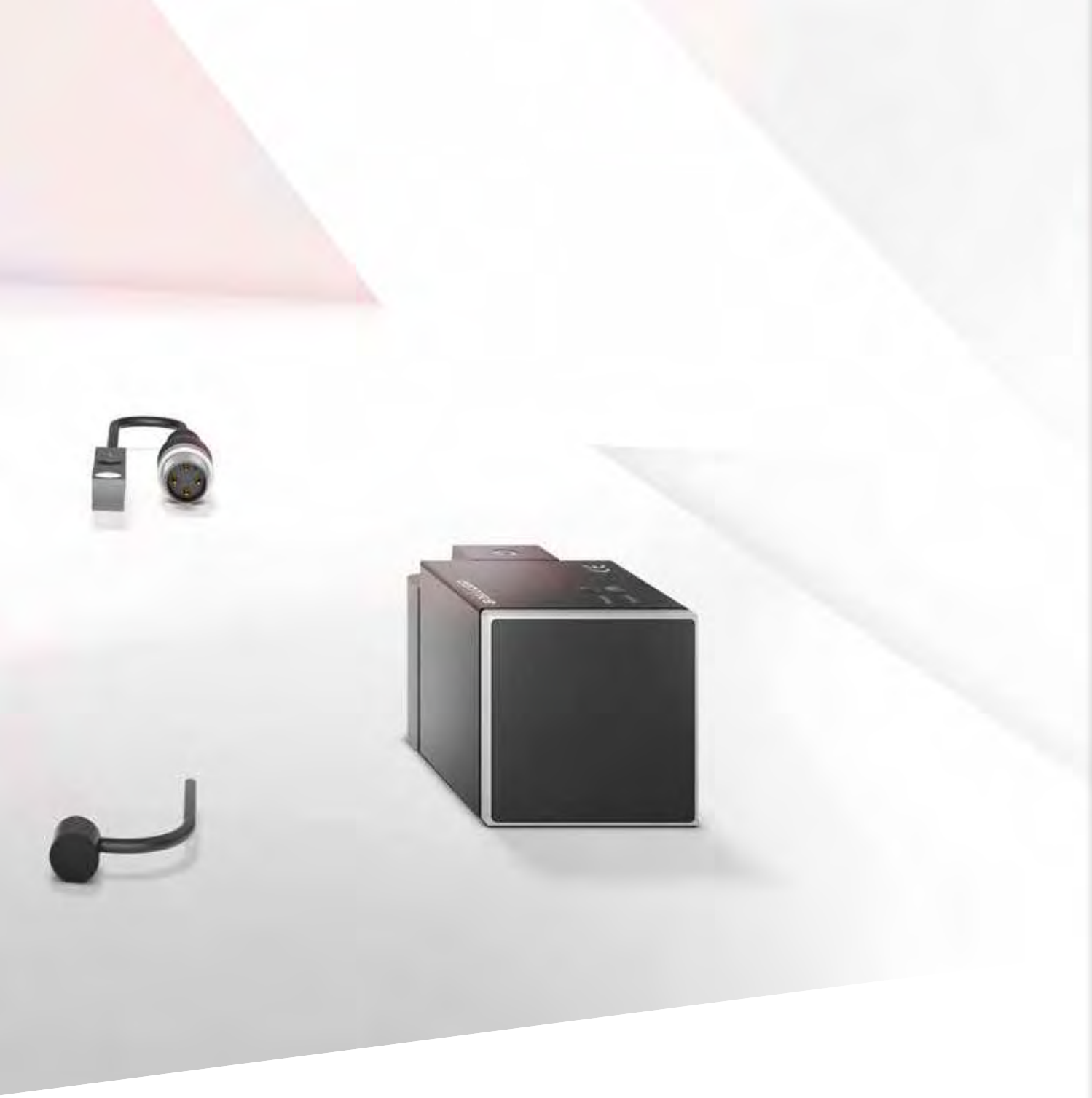

Automation is almost inconceivable without inductive sensors. Wherever processes are automated, non-contact position detection of metallic objects, freedom from wear, and reliability are in demand.
Whether in machine building, electronics production, in the automobile, foods or plastics industry.

At Balluff you are offered a wide range of inductive sensors in various form factors for virtually any application: from standard sensors to sensors with extended switching distance, hygiene-approved, high-pressure and Ex sensors, Factor 1 or all-metal sensors. They are also available with additional ceramic or PTFE coating, for example to prevent weld splatter from adhering. You will also find all-metal with Factor 1 in our range.

Balluff inductive sensors are used to monitor, control and automate your processes and conditions. With the highest level of quality – even in extreme environments.

The most important benefits

- Suitable for a variety of applications
- Contact-free and therefore wear-free
- Resistant to dirt
- Short-circuit protected
- In configurations from 3 mm Ø to 80 × 80 mm square dimensions

PNP normally open	**BES03Z6** BES G03EC-PSC10B-EP02	**BES0409** BES G03EC-PSC10B-EP00,3-GS49	
PNP normally closed			
Dimension	Ø 3 x 22 mm	Ø 3 x 22 mm	
Style	D3.0	D3.0	
Installation	flush	flush	
Range	1 mm	1 mm	
Switching frequency	3500 Hz	3500 Hz	
Housing material	Stainless steel	Stainless steel	
Material sensing surface	PBT	PBT	
Connection	Cable, 2.00 m, PUR	Cable with connector, M8x1-Male, 3-pin, 0.30 m, PUR	
Operating voltage Ub	10...30 VDC	10...30 VDC	
Ambient temperature	-25...70 °C	-25...70 °C	
IP rating	IP67	IP67	
Approval/Conformity	CE, cULus, EAC, WEEE	CE, cULus, EAC, WEEE	
Productview	Page 114	Page 114	

	BES0122 BES G04EC-PSC08B-S26G	BES012F BES G04ED-PSC15B-S26G	BES012H BES G04ED-PSC50F-EP02	BES012J BES G04ED-PSC50F-EP05
	BES0120 BES G04EC-POC08B-S26G			
	Ø 4 x 29 mm	Ø 4 x 35 mm	Ø 4 x 35 mm	Ø 4 x 35 mm
	D4.0	D4.0	D4.0	D4.0
	flush	flush	non-flush	non-flush
	0.8 mm	1.5 mm	5 mm	5 mm
	5000 Hz	3000 Hz	3000 Hz	3000 Hz
	Stainless steel	Stainless steel	Stainless steel	Stainless steel
	PBT	PBT	PET-C	PET-C
	Connector, M5x0.5-Male	Connector, M5x0.5-Male	Cable, 2.00 m, PUR	Cable, 5.00 m, PUR
	10...30 VDC	10...30 VDC	10...30 VDC	10...30 VDC
	-25...70 °C	-25...70 °C	-25...70 °C	-25...70 °C
	IP67	IP67	IP67	IP67
	CE, cULus, EAC, WEEE	CE, cULus, EAC, WEEE	CE, cULus, EAC, WEEE	CE, cULus, EAC, WEEE
	Page 114	Page 114	Page 114	Page 114

PNP normally open	**BES012K** BES G04ED-PSC50F-S26G	**BES01P0** BES M04EC-PSD06B-BP02	
PNP normally closed			
NPN normally open		**BES03ZJ** BES M04EC-NSC10B-EP02	
Dimension	Ø 4 x 44 mm	Ø 4 x 22 mm	
Style	D4.0	M4x0.5	
Installation	non-flush	flush	
Range	5 mm	0.6 mm	
Switching frequency	3000 Hz	3500 Hz	
Housing material	Stainless steel	Stainless steel	
Material sensing surface	PET-C	PBT	
Connection	Connector, M5x0.5-Male	Cable, 2.00 m, PUR	
Operating voltage Ub	10...30 VDC	10...30 VDC	
Ambient temperature	-25...70 °C	-25...70 °C	
IP rating	IP67	IP67	
Approval/Conformity	CE, cULus, EAC, WEEE	CE, cULus, EAC, WEEE	
Productview	Page 114	Page 115	

	BES03Z8 BES M04EC-PSC10B-EP02	**BES040R** BES M04EC-PSC10B-EP00,3-GS49	**BES051J** BES M05ED-PSC10B-EP00,2-097	**BES012Z** BES M05EC-PSC08B-S26G
			BES051L BES M05ED-POC10B-EP00,3-097	
				BES012W BES M05EC-NSC08B-S26G
	Ø 4 x 22 mm	Ø 4 x 22 mm	Ø 5 x 27 mm	Ø 5 x 29 mm
	M4x0.5	M4x0.5	M5x0.5	M5x0.5
	flush	flush	flush	flush
	1 mm	1 mm	1 mm	0.8 mm
	3500 Hz	3500 Hz	5000 Hz	3000 Hz
	Stainless steel	Stainless steel	Stainless steel	Stainless steel
	PBT	PBT	PBT	PBT
	Cable, 2.00 m, PUR	Cable with connector, M8x1-Male, 3-pin, 0.30 m, PUR	Cable, 0.20 m, PUR	Connector, M5x0.5-Male
	10...30 VDC	10...30 VDC	10...30 VDC	10...30 VDC
	-25...70 °C	-25...70 °C	-25...70 °C	-25...70 °C
	IP67	IP67	IP67	IP67
	CE, cULus, EAC, WEEE	CE, cULus, EAC, WEEE	CE, cULus, EAC, WEEE	CE, cULus, EAC, WEEE
	Page 115	Page 115	Page 115	Page 115

PNP normally open	**BES013A** BES M05ED-PSC15B-S26G	**BES013E** BES M05ED-PSC50F-EP02	
PNP normally closed	**BES0137** BES M05ED-POC15B-S26G		
NPN normally closed	**BES0130** BES M05ED-NOC15B-S26G		
Dimension	Ø 5 x 35 mm	Ø 5 x 35 mm	
Style	M5x0.5	M5x0.5	
Installation	flush	non-flush	
Range	1.5 mm	5 mm	
Switching frequency	3000 Hz	3000 Hz	
Housing material	Stainless steel	Stainless steel	
Material sensing surface	PBT	PET-C	
Connection	Connector, M5x0.5-Male	Cable, 2.00 m, PUR	
Operating voltage Ub	10...30 VDC	10...30 VDC	
Ambient temperature	-25...70 °C	-25...70 °C	
IP rating	IP67	IP67	
Approval/Conformity	CE, cULus, EAC, WEEE	CE, cULus, EAC, WEEE	
Productview	Page 115	Page 115	

	BES013F BES M05ED-PSC50F-EP05	BES013C BES M05ED-PSC50F-EP00,3-GS04	BES013H BES M05ED-PSC50F-S26G	BES025U BES G06K40-PSC15B-FP02
			BES0139 BES M05ED-POC50F-S26G	
	Ø 5 x 35 mm	Ø 5 x 35 mm	Ø 5 x 44 mm	Ø 6.5 x 6 mm
	M5x0.5	M5x0.5	M5x0.5	D6.5
	non-flush	non-flush	non-flush	flush
	5 mm	5 mm	5 mm	1.5 mm
	3000 Hz	3000 Hz	3000 Hz	3000 Hz
	Stainless steel	Stainless steel	Stainless steel	PBT
	PET-C	PET-C	PET-C	PBT
	Cable, 5.00 m, PUR	Cable with connector, M12x1-Male, 4-pin, 0.30 m, PUR	Connector, M5x0.5-Male	Cable, 2.00 m, PUR
	10...30 VDC	10...30 VDC	10...30 VDC	10...30 VDC
	-25...70 °C	-25...70 °C	-25...70 °C	-25...70 °C
	IP67	IP67	IP67	IP65
	CE, cULus, EAC, WEEE	CE, cULus, EAC, WEEE	CE, cULus, EAC, WEEE	CE, cULus, EAC, WEEE
	Page 115	Page 115	Page 116	Page 116

PNP normally open	**BES0256** BES G06E60-PSC15B-EP02	**BES025L** BES G06EA-PSC15B-EP01	
PNP normally closed	**BES0251** BES G06E60-POC15B-EP02		
Dimension	Ø 6.5 x 6 mm	Ø 6.5 x 10 mm	
Style	D6.5	D6.5	
Installation	flush	flush	
Range	1.5 mm	1.5 mm	
Switching frequency	3000 Hz	3000 Hz	
Housing material	Stainless steel	Stainless steel	
Material sensing surface	PBT	PBT	
Connection	Cable, 2.00 m, PUR	Cable, 1.00 m, PUR	
Operating voltage Ub	10...30 VDC	10...30 VDC	
Ambient temperature	-25...70 °C	-25...70 °C	
IP rating	IP67	IP67	
Approval/Conformity	CE, cULus, EAC, WEEE	CE, cULus, EAC, WEEE	
Productview	Page 116	Page 116	

	BES025M BES G06EA-PSC15B-EP02	**BES0258** BES G06E60-PSC20B-EP02	**BES03ZA** BES G06K40-PSC20B-FP02	**BES0254** BES G06E60-PSC15B-EP00,3-GS49
	BES025H BES G06EA-POC15B-EP02			
	Ø 6.5 x 10 mm	Ø 6.5 x 6 mm	Ø 6.5 x 6 mm	Ø 6.5 x 6 mm
	D6.5	D6.5	D6.5	D6.5
	flush	flush	flush	flush
	1.5 mm	2 mm	2 mm	1.5 mm
	3000 Hz	3000 Hz	1500 Hz	3000 Hz
	Stainless steel	Stainless steel	PBT	Stainless steel
	PBT	PBT	PBT	PBT
	Cable, 2.00 m, PUR	Cable, 2.00 m, PUR	Cable, 2.00 m, PUR	Cable with connector, M8x1-Male, 3-pin, 0.30 m, PUR
	10...30 VDC	10...30 VDC	10...30 VDC	10...30 VDC
	-25...70 °C	-25...70 °C	-25...70 °C	-25...70 °C
	IP67	IP67	IP65	IP67
	CE, cULus, EAC, WEEE	CE, cULus, EAC, WEEE	CE, cULus, EAC, WEEE	CE, cULus, EAC, WEEE
	Page 116	Page 116	Page 116	Page 116

PNP normally open		**BES0257** BES G06E60-PSC20B-EP00,3-GS49	
PNP normally closed	**BES051H** BES G06E60-POC15B-EP01-GS49		
Dimension	Ø 6.5 x 6 mm	Ø 6.5 x 6 mm	
Style	D6.5	D6.5	
Installation	flush	flush	
Range	1.5 mm	2 mm	
Switching frequency	3000 Hz	3000 Hz	
Housing material	Stainless steel	Stainless steel	
Material sensing surface	PBT	PBT	
Connection	Cable with connector, M8x1-Male, 3-pin, 1.00 m, PUR	Cable with connector, M8x1-Male, 3-pin, 0.30 m, PUR	
Operating voltage Ub	10...30 VDC	10...30 VDC	
Ambient temperature	-25...70 °C	-25...70 °C	
IP rating	IP67	IP67	
Approval/Conformity	CE, cULus, EAC, WEEE	CE, cULus, EAC, WEEE	
Productview	Page 116	Page 116	

	BES025N BES G06EA-PSD15B-S49G	BES03R9 BES G06EE-PSC20B-S49G-003	BES03P4 BES G06EH-PSC20B-S49G	BES038Y BES G06EI-PSC30B-S49G
	Ø 6.5 x 18 mm	Ø 6.5 x 40 mm	Ø 6.5 x 55 mm	Ø 6.5 x 60 mm
	D6.5	D6.5	D6.5	D6.5
	flush	flush	flush	quasi-flush
	1.5 mm	2 mm	2 mm	3 mm
	3000 Hz	700 Hz	1500 Hz	1200 Hz
	Stainless steel	Stainless steel	Stainless steel	Stainless steel
	PBT	PBT	PBT	PBT
	Connector, M8x1-Male, 3-pin	Connector, M8x1-Male, 3-pin	Connector, M8x1-Male, 3-pin	Connector, M8x1-Male, 3-pin
	10...30 VDC	10...30 VDC	10...30 VDC	10...30 VDC
	-25...70 °C	-25...70 °C	-25...70 °C	-25...70 °C
	IP67	IP67	IP67	IP68
	CE, cULus, EAC, WEEE	cULus, CE, EAC, WEEE	CE, cULus, EAC, WEEE	CE, cULus, EAC, WEEE
	Page 116	Page 116	Page 116	Page 117

PNP normally open	**BES000E** BES G06ED-PSC40F-BP02	**BES0005** BES G06EB-PSC40F-S49G	
NPN normally open	**BES0008** BES G06ED-NSC40F-BP02		
Dimension	Ø 6.5 x 30 mm	Ø 6.5 x 30 mm	
Style	D6.5	D6.5	
Installation	non-flush	non-flush	
Range	4 mm	4 mm	
Switching frequency	4000 Hz	4000 Hz	
Housing material	Stainless steel	Stainless steel	
Material sensing surface	PBT	PBT	
Connection	Cable, 2.00 m, PUR	Connector, M8x1-Male, 3-pin	
Operating voltage Ub	10...30 VDC	10...30 VDC	
Ambient temperature	-25...70 °C, Temperature drift max. (% of Sr) >15% between 50…70 °C	-25...70 °C, Temperature drift max. (% of Sr) >15% between 50…70 °C	
IP rating	IP68	IP68	
Approval/Conformity	CE, cULus, EAC, WEEE	CE, cULus, EAC, WEEE	
Productview	Page 117	Page 117	

	BES01NP BES G06EF-PSC40F-S49G	BES03P5 BES G06EH-PSC40F-S49G	BES03EJ BES G06MH-PSC30B-BP00,3-GS49	
	Ø 6.5 x 50 mm	Ø 6.5 x 60 mm	Ø 6.5 x 45 mm	
	D6.5	D6.5	D6.5	
	non-flush	non-flush	quasi-flush	
	4 mm	4 mm	3 mm	
	4000 Hz	4000 Hz	1000 Hz	
	Stainless steel	Stainless steel	Brass, Chrome-plated	
	PBT	PBT	PBT	
	Connector, M8x1-Male, 3-pin	Connector, M8x1-Male, 3-pin	Cable with connector, M8x1-Male, 3-pin, 0.30 m, PUR	
	10...30 VDC	10...30 VDC	10...30 VDC	
	-25...70 °C, Temperature drift max. (% of Sr) >15% between 50…70 °C	-25...70 °C, Temperature drift max. (% of Sr) >15% between 50…70 °C	-25...70 °C	
	IP68	IP68	IP67	
	CE, cULus, EAC, WEEE	CE, cULus, EAC, WEEE	CE, EAC, WEEE	
	Page 117	Page 117	Page 117	

PNP normally open	**BES05WE** BES G06EI-PSC40B-S49G	**BES012R** BES G08EG-PSC15B-BP05	
Dimension	Ø 6.5 x 60 mm	Ø 8 x 45 mm	
Style	D6.5	D8.0	
Installation	quasi-flush	flush	
Range	4 mm	1.5 mm	
Switching frequency	1100 Hz	3000 Hz	
Housing material	Stainless steel	Stainless steel	
Material sensing surface	PBT	PBT	
Connection	Connector, M8x1-Male, 3-pin	Cable, 5.00 m, PUR	
Operating voltage Ub	10...30 VDC	10...30 VDC	
Ambient temperature	-25...70 °C	-25...70 °C	
IP rating	IP68	IP68	
Approval/Conformity	CE, cULus, EAC, WEEE	CE, cULus, EAC, WEEE	
Productview	Page 117	Page 117	

	BES01NY BES G08EG-PSC15B-BV02	BES012T BES G08EG-PSC15B-BV05	BES012L BES G08EE-PSC20B-BP02	BES026M BES M08E60-PSC15B-EP02
	Ø 8 x 45 mm	Ø 8 x 45 mm	Ø 8 x 35 mm	Ø 8 x 6 mm
	D8.0	D8.0	D8.0	M8x1
	flush	flush	flush	flush
	1.5 mm	1.5 mm	2 mm	1.5 mm
	3000 Hz	3000 Hz	1500 Hz	3000 Hz
	Stainless steel	Stainless steel	Stainless steel	Stainless steel
	PBT	PBT	PBT	PBT
	Cable, 2.00 m, PVC	Cable, 5.00 m, PVC	Cable, 2.00 m, PUR	Cable, 2.00 m, PUR
	10...30 VDC	10...30 VDC	10...30 VDC	10...30 VDC
	-25...70 °C	-25...70 °C	-25...70 °C	-25...70 °C
	IP68	IP68	IP68	IP67
	CE, cULus, EAC, WEEE	CE, cULus, EAC, WEEE	CE, cULus, EAC, WEEE	CE, cULus, EAC, WEEE
	Page 117	Page 117	Page 118	Page 118

PNP normally open	**BES0275** BES M08EA-PSC15B-EP02		
PNP normally closed		**BES00CR** BES M08EF-P0C15B-BP02-003	
NPN normally open		**BES00CN** BES M08EF-NSC15B-BP02-003	
Dimension	Ø 8 x 10 mm	Ø 8 x 40 mm	
Style	M8x1	M8x1	
Installation	flush	flush	
Range	1.5 mm	1.5 mm	
Switching frequency	3000 Hz	1000 Hz	
Housing material	Stainless steel	Stainless steel	
Material sensing surface	PBT	PBT	
Connection	Cable, 2.00 m, PUR	Cable, 2.00 m, PUR	
Operating voltage Ub	10...30 VDC	10...30 VDC	
Ambient temperature	-25...70 °C	-25...70 °C	
IP rating	IP67	IP67	
Approval/Conformity	CE, cULus, EAC, WEEE	CE, cULus, EAC, WEEE	
Productview	Page 118	Page 118	

BES014K BES M08EF-PSC15B-BP02	**BES0034** BES M08MI-PSC15B-BP02	**BES0036** BES M08MI-PSC15B-BP05	
			BES0031 BES M08MI-POC15B-BV03
	BES002H BES M08MI-NSC15B-BV03		
Ø 8 x 40 mm	Ø 8 x 50 mm	Ø 8 x 50 mm	Ø 8 x 50 mm
M8x1	M8x1	M8x1	M8x1
flush	flush	flush	flush
1.5 mm	1.5 mm	1.5 mm	1.5 mm
3000 Hz	1000 Hz	1000 Hz	5000 Hz
Stainless steel	Brass, nickel plated	Brass, nickel plated	Brass, Nickel-free coated
PBT	PA 12	PA 12	PBT
Cable, 2.00 m, PUR	Cable, 2.00 m, PUR	Cable, 5.00 m, PUR	Cable, 3.00 m, PVC
10...30 VDC	12...30 VDC	12...30 VDC	10...30 VDC
-25...70 °C	-25...70 °C	-25...70 °C	-25...70 °C
IP68	IP67	IP67	IP68
CE, cULus, EAC, WEEE	CE, cULus, EAC, WEEE	CE, cULus, EAC, WEEE	CE, cULus, EAC, WEEE
Page 118	Page 118	Page 118	Page 118

PNP normally open		**BES0037** BES M08MI-PSC15B-BV02	
PNP normally closed	**BES0032** BES M08MI-POC15B-BV05		
NPN normally open			
Dimension	Ø 8 x 50 mm	Ø 8 x 50 mm	
Style	M8x1	M8x1	
Installation	flush	flush	
Range	1.5 mm	1.5 mm	
Switching frequency	1000 Hz	5000 Hz	
Housing material	Brass, nickel plated	Brass, Nickel-free coated	
Material sensing surface	PA 12	PBT	
Connection	Cable, 5.00 m, PVC	Cable, 2.00 m, PVC	
Operating voltage Ub	12...30 VDC	10...30 VDC	
Ambient temperature	-25...70 °C	-25...70 °C	
IP rating	IP67	IP68	
Approval/Conformity	CE, cULus, EAC, WEEE	CE, cULus, EAC, WEEE	
Productview	Page 118	Page 118	

	BES0389 BES M08EE-PSC20B-EP05-511	**BES00CW** BES M08EF-PSC20B-BP02-003	**BES003F** BES M08MI-PSC20B-BP02	**BES003J** BES M08MI-PSC20B-BP05
			BES002P BES M08MI-NSC20B-BV02	
	Ø 8 x 30 mm	Ø 8 x 40 mm	Ø 8 x 50 mm	Ø 8 x 50 mm
	M8x1	M8x1	M8x1	M8x1
	flush	flush	flush	flush
	2 mm	2 mm	2 mm	2 mm
	1000 Hz	700 Hz	700 Hz	700 Hz
	Stainless steel	Stainless steel	Brass, nickel plated	Brass, nickel plated
	PBT	PBT	PA 12	PA 12
	Cable, 5.00 m, PUR	Cable, 2.00 m, PUR	Cable, 2.00 m, PUR	Cable, 5.00 m, PUR
	10...30 VDC	10...30 VDC	12...30 VDC	12...30 VDC
	-25...70 °C	-25...70 °C	-25...70 °C	-25...70 °C
	IP67	IP67	IP67	IP67
	CE, cULus, EAC, WEEE	CE, cULus, EAC, WEEE	CE, cULus, EAC, WEEE	CE, cULus, EAC, WEEE
	Page 118	Page 118	Page 118	Page 118

PNP normally open	**BES03TL** BES M08MI-PSC20B-BP10	**BES003K** BES M08MI-PSC20B-BV02	
PNP normally closed			
Dimension	Ø 8 x 50 mm	Ø 8 x 50 mm	
Style	M8x1	M8x1	
Installation	flush	flush	
Range	2 mm	2 mm	
Switching frequency	700 Hz	5000 Hz	
Housing material	Brass, nickel plated	Brass, Nickel-free coated	
Material sensing surface	PA 12	PBT	
Connection	Cable, 10.00 m, PUR	Cable, 2.00 m, PVC	
Operating voltage Ub	12...30 VDC	10...30 VDC	
Ambient temperature	-25...70 °C	-25...70 °C	
IP rating	IP67	IP68	
Approval/Conformity	CE, cULus, EAC, WEEE	CE, cULus, EAC, WEEE	
Productview	Page 118	Page 118	

	BES003M BES M08MI-PSC20B-BV05		**BES0276** BES M08EA-PSC20B-EP00,3-GS49	**BES0277** BES M08EA-PSD15B-S49G
		BES03TH BES M08MI-POC20B-BV02		**BES0270** BES M08EA-POD15B-S49G
	Ø 8 x 50 mm	Ø 8 x 50 mm	Ø 8 x 10 mm	Ø 8 x 18 mm
	M8x1	M8x1	M8x1	M8x1
	flush	flush	flush	flush
	2 mm	2 mm	2 mm	1.5 mm
	700 Hz	5000 Hz	3000 Hz	3000 Hz
	Brass, nickel plated	Brass, Nickel-free coated	Stainless steel	Stainless steel
	PA 12	PBT	PBT	PBT
	Cable, 5.00 m, PVC	Cable, 2.00 m, PVC	Cable with connector, M8x1-Male, 3-pin, 0.30 m, PUR	Connector, M8x1-Male, 3-pin
	12...30 VDC	10...30 VDC	10...30 VDC	10...30 VDC
	-25...70 °C	-25...70 °C	-25...70 °C	-25...70 °C
	IP67	IP68	IP67	IP67
	CE, cULus, EAC, WEEE	CE, cULus, EAC, WEEE	CE, cULus, EAC, WEEE	CE, cULus, EAC, WEEE
	Page 118	Page 118	Page 118	Page 118

PNP normally open	**BES013N** BES M08EC-PSC15B-S49G	**BES013M** BES M08EC-PSC15B-S04G	
PNP normally closed	**BES013K** BES M08EC-POC15B-S49G		
NPN normally open	**BES013J** BES M08EC-NSC15B-S49G		
Dimension	Ø 8 x 30 mm	Ø 8 x 33 mm	
Style	M8x1	M8x1	
Installation	flush	flush	
Range	1.5 mm	1.5 mm	
Switching frequency	3000 Hz	3000 Hz	
Housing material	Stainless steel	Stainless steel	
Material sensing surface	PBT	PBT	
Connection	Connector, M8x1-Male, 3-pin	Connector, M12x1-Male, 4-pin	
Operating voltage Ub	10...30 VDC	10...30 VDC	
Ambient temperature	-25...70 °C	-25...70 °C	
IP rating	IP68	IP68	
Approval/Conformity	CE, cULus, EAC, WEEE	CE, cULus, EAC, WEEE	
Productview	Page 119	Page 119	

	BES0147 BES M08EE-PSC15B-S49G	**BES0146** BES M08EE-PSC15B-S04G	**BES01P7** BES M08EG-PSC15B-S49G	
	BES0143 BES M08EE-POC15B-S49G	**BES0142** BES M08EE-POC15B-S04G		**BES01PE** BES M08EH-POC15B-S04G
		BES013Y BES M08EE-NSC15B-S04G		**BES01PC** BES M08EH-NSC15B-S04G
	Ø 8 x 40 mm	Ø 8 x 43 mm	Ø 8 x 50 mm	Ø 8 x 58 mm
	M8x1	M8x1	M8x1	M8x1
	flush	flush	flush	flush
	1.5 mm	1.5 mm	1.5 mm	1.5 mm
	3000 Hz	3000 Hz	5000 Hz	3000 Hz
	Stainless steel	Stainless steel	Stainless steel	Stainless steel
	PBT	PBT	PBT	PBT
	Connector, M8x1-Male, 3-pin	Connector, M12x1-Male, 4-pin	Connector, M8x1-Male, 3-pin	Connector, M12x1-Male, 4-pin
	10...30 VDC	10...30 VDC	10...30 VDC	10...30 VDC
	-25...70 °C	-25...70 °C	-40...85 °C	-25...70 °C
	IP68	IP68	IP68	IP68
	CE, cULus, EAC, WEEE	CE, cULus, EAC, WEEE	CE, cULus, EAC, WEEE	CE, cULus, EAC, WEEE
	Page 119	Page 119	Page 119	Page 119

PNP normally open		**BES003C** BES M08MI-PSC15B-S49G	
PNP normally closed	**BES03P6** BES M08MI-POC15B-S49G		
NPN normally open	**BES002K** BES M08MI-NSC15B-S49G		
Dimension	Ø 8 x 59 mm	Ø 8 x 60 mm	
Style	M8x1	M8x1	
Installation	flush	flush	
Range	1.5 mm	1.5 mm	
Switching frequency	1000 Hz	5000 Hz	
Housing material	Brass, nickel plated	Brass, Nickel-free coated	
Material sensing surface	PA 12	PBT	
Connection	Connector, M8x1-Male, 3-pin	Connector, M8x1-Male, 3-pin	
Operating voltage Ub	12...30 VDC	10...30 VDC	
Ambient temperature	-25...70 °C	-25...70 °C	
IP rating	IP67	IP68	
Approval/Conformity	CE, cULus, EAC, WEEE	CE, cULus, EAC, WEEE	
Productview	Page 119	Page 119	

		BES0027 BES M08MH1-PSC15B-S04G	**BES0278** BES M08EA-PSD20B-S49G	**BES013P** BES M08EC-PSC20B-S49G
	BES0026 BES M08MH1-POC15B-S04G			**BES013L** BES M08EC-POC20B-S49G
	BES0024 BES M08MH1-NSC15B-S04G			
	Ø 8 x 65 mm	Ø 8 x 65 mm	Ø 8 x 18 mm	Ø 8 x 30 mm
	M8x1	M8x1	M8x1	M8x1
	flush	flush	flush	flush
	1.5 mm	1.5 mm	2 mm	2 mm
	1000 Hz	1000 Hz	3000 Hz	1500 Hz
	Brass, nickel plated	Brass, nickel plated	Stainless steel	Stainless steel
	PA 12	PA 12	PBT	PBT
	Connector, M12x1-Male, 4-pin	Connector, M12x1-Male, 4-pin	Connector, M8x1-Male, 3-pin	Connector, M8x1-Male, 3-pin
	12...30 VDC	12...30 VDC	10...30 VDC	10...30 VDC
	-25...70 °C	-25...70 °C	-25...70 °C	-25...70 °C
	IP67	IP67	IP67	IP68
	CE, cULus, EAC, WEEE	CE, cULus, EAC, WEEE	CE, cULus, EAC, WEEE	CE, cULus, EAC, WEEE
	Page 119	Page 119	Page 118	Page 119

PNP normally open	**BES014A** BES M08EE-PSC20B-S49G	**BES0149** BES M08EE-PSC20B-S04G-101	
PNP normally closed	**BES0145** BES M08EE-POC20B-S49G		
NPN normally open			
Dimension	Ø 8 x 40 mm	Ø 8 x 43 mm	
Style	M8x1	M8x1	
Installation	flush	flush	
Range	2 mm	2 mm	
Switching frequency	1500 Hz	1500 Hz	
Housing material	Stainless steel	Stainless steel	
Material sensing surface	PBT	ceramic coated	
Connection	Connector, M8x1-Male, 3-pin	Connector, M12x1-Male, 4-pin	
Operating voltage Ub	10...30 VDC	10...30 VDC	
Ambient temperature	-25...70 °C	-25...70 °C	
IP rating	IP68	IP68	
Approval/Conformity	CE, cULus, EAC, WEEE	CE, cULus, EAC, WEEE	
Productview	Page 119	Page 119	

BES01PH BES M08EH-PSC20B-S04G		**BES003P** BES M08MI-PSC20B-S49G	**BES0028** BES M08MH1-PSC20B-S04G
		BES0033 BES M08MI-POC20B-S49G	**BES03T5** BES M08MH1-POC20B-S04G
	BES002U BES M08MI-NSC20B-S49G		**BES0025** BES M08MH1-NSC20B-S04G
Ø 8 x 58 mm	Ø 8 x 59 mm	Ø 8 x 60 mm	Ø 8 x 65 mm
M8x1	M8x1	M8x1	M8x1
flush	flush	flush	flush
2 mm	2 mm	2 mm	2 mm
1500 Hz	700 Hz	5000 Hz	700 Hz
Stainless steel	Brass, nickel plated	Brass, Nickel-free coated	Brass, nickel plated
PBT	PA 12	PBT	PA 12
Connector, M12x1-Male, 4-pin	Connector, M8x1-Male, 3-pin	Connector, M8x1-Male, 3-pin	Connector, M12x1-Male, 4-pin
10...30 VDC	12...30 VDC	10...30 VDC	12...30 VDC
-25...70 °C	-25...70 °C	-25...70 °C	-25...70 °C
IP68	IP67	IP68	IP67
CE, cULus, EAC, WEEE	CE, cULus, EAC, WEEE	CE, cULus, EAC, WEEE	CE, cULus, EAC, WEEE
Page 119	Page 119	Page 119	Page 119

PNP normally open	**BES0427** BES M08EE-PSC25B-S49G	**BES054N** BES M08MI-PSC30B-S49G	
PNP normally closed			
NPN normally open			
Dimension	Ø 8 x 40 mm	Ø 8 x 60 mm	
Style	M8x1	M8x1	
Installation	flush	flush	
Range	2.5 mm	3 mm	
Switching frequency	5000 Hz	1200 Hz	
Housing material	Stainless steel	Brass, Nickel-free coated	
Material sensing surface	PBT	PBT	
Connection	Connector, M8x1-Male, 3-pin	Connector, M8x1-Male, 3-pin	
Operating voltage Ub	10...30 VDC	10...30 VDC	
Ambient temperature	0...60 °C	-25...70 °C	
IP rating	IP68	IP68	
Approval/Conformity	CE, cULus, EAC, WEEE	CE, cULus, EAC, WEEE	
Productview	Page 120	Page 120	

	BES02W9 BES M08MH1-PSC30B-S04G	**BES000Y** BES M08ED-PSC40F-BP02		**BES0016** BES M08EG-PSC40F-BP02
				BES0014 BES M08EG-POC40F-BP02
	BES02W7 BES M08MH1-NSC30B-S04G	**BES000T** BES M08ED-NSC40F-BV02	**BES0013** BES M08EG-NSC40F-BV02	
	Ø 8 x 63 mm	Ø 8 x 30 mm	Ø 8 x 50 mm	Ø 8 x 50 mm
	M8x1	M8x1	M8x1	M8x1
	flush	non-flush	non-flush	non-flush
	3 mm	4 mm	4 mm	4 mm
	1200 Hz	4000 Hz	4000 Hz	4000 Hz
	Brass, Nickel-free coated	Stainless steel	Stainless steel	Stainless steel
	PBT	PBT	PBT	PBT
	Connector, M12x1-Male, 4-pin	Cable, 2.00 m, PUR	Cable, 2.00 m, PVC	Cable, 2.00 m, PUR
	10...30 VDC	10...30 VDC	10...30 VDC	10...30 VDC
	-25...70 °C	-25...70 °C, Temperature drift max. (% of Sr) >15% between 50…70 °C	-25...70 °C, Temperature drift max. (% of Sr) >15% between 50…70 °C	-25...70 °C, Temperature drift max. (% of Sr) >15% between 50…70 °C
	IP68	IP68	IP68	IP68
	CE, cULus, EAC, WEEE	CE, cULus, EAC, WEEE	CE, cULus, EAC, WEEE	CE, cULus, EAC, WEEE
	Page 120	Page 120	Page 120	Page 120

PNP normally open	**BES01P3** BES M08ED-PSC25F-S04G	**BES01P8** BES M08EG-PSC25F-S04G	
PNP normally closed		**BES01P6** BES M08EG-POC25F-S04G	
NPN normally open		**BES01P5** BES M08EG-NSC25F-S04G	
Dimension	Ø 8 x 43 mm	Ø 8 x 58 mm	
Style	M8x1	M8x1	
Installation	non-flush	non-flush	
Range	2.5 mm	2.5 mm	
Switching frequency	2000 Hz	2000 Hz	
Housing material	Stainless steel	Stainless steel	
Material sensing surface	PBT	PBT	
Connection	Connector, M12x1-Male, 4-pin	Connector, M12x1-Male, 4-pin	
Operating voltage Ub	10...30 VDC	10...30 VDC	
Ambient temperature	-25...70 °C	-25...70 °C	
IP rating	IP68	IP68	
Approval/Conformity	CE, cULus, EAC, WEEE	CE, cULus, EAC, WEEE	
Productview	Page 120	Page 120	

BES000M BES M08EB-PSC40F-S49G	**BES014M** BES M08EF-PSC40F-S49G	**BES001J** BES M08EH-PSC40F-S49G	**BES01P9** BES M08EG1-PSC40F-S04G
BES000L BES M08EB-POC40F-S49G		**BES001F** BES M08EH-POC40F-S49G	
		BES001C BES M08EH-NSC40F-S49G	
Ø 8 x 30 mm	Ø 8 x 50 mm	Ø 8 x 60 mm	Ø 8 x 63 mm
M8x1	M8x1	M8x1	M8x1
non-flush	non-flush	non-flush	non-flush
4 mm	4 mm	4 mm	4 mm
4000 Hz	4000 Hz	4000 Hz	4000 Hz
Stainless steel	Stainless steel	Stainless steel	Stainless steel
PBT	PBT	PBT	PBT
Connector, M8x1-Male, 3-pin	Connector, M8x1-Male, 3-pin	Connector, M8x1-Male, 3-pin	Connector, M12x1-Male, 3-pin
10...30 VDC	10...30 VDC	10...30 VDC	10...30 VDC
-25...70 °C, Temperature drift max. (% of Sr) >15% between 50…70 °C	-25...70 °C, Temperature drift max. (% of Sr) >15% between 50…70 °C	-25...70 °C, Temperature drift max. (% of Sr) >15% between 50…70 °C	-25...70 °C, Temperature drift max. (% of Sr) >15% between 50…70 °C
IP68	IP68	IP68	IP68
CE, cULus, EAC, WEEE	CE, cULus, EAC, WEEE	CE, cULus, EAC, WEEE	CE, cULus, EAC, WEEE
Page 120	Page 121	Page 121	Page 121

PNP normally open	**BES001H** BES M08EH-PSC40F-S04G	**BES054Z** BES M08EH1-PSC60F-S49G	
PNP normally closed	**BES001E** BES M08EH-POC40F-S04G	**BES0550** BES M08EH1-POC60F-S49G	
NPN normally open	**BES001A** BES M08EH-NSC40F-S04G		
Dimension	Ø 8 x 63 mm	Ø 8 x 60 mm	
Style	M8x1	M8x1	
Installation	non-flush	non-flush	
Range	4 mm	6 mm	
Switching frequency	4000 Hz	1200 Hz	
Housing material	Stainless steel	Stainless steel	
Material sensing surface	PBT	PBT	
Connection	Connector, M12x1-Male, 3-pin	Connector, M8x1-Male, 3-pin	
Operating voltage Ub	10...30 VDC	10...30 VDC	
Ambient temperature	-25...70 °C, Temperature drift max. (% of Sr) >15% between 50…70 °C	-25...70 °C	
IP rating	IP68	IP68	
Approval/Conformity	CE, cULus, EAC, WEEE	CE, cULus, EAC, WEEE	
Productview	Page 121	Page 121	

	BES058J BES M08EH1-PSC60F-S04G	**BES05U9** BES M08MM-PSC40B-BP00,3-GS04		
		BES05UA BES M08MM-NSC40B-BP00,3-GS04		
	Ø 8 x 63 mm	Ø 8 x 60 mm		
	M8x1	M8x1		
	non-flush	quasi-flush		
	6 mm	4 mm		
	1200 Hz	1200 Hz		
	Stainless steel	Brass, Nickel-free coated		
	PBT	PBT		
	Connector, M12x1-Male, 4-pin	Cable with connector, M12x1-Male, 3-pin, 0.3 m, PUR		
	10...30 VDC	10...30 VDC		
	-25...70 °C	-25...70 °C		
	IP68	IP67		
	CE, cULus, EAC, WEEE	CE, cULus, EAC, WEEE		
	Page 121	Page 121		

PNP normally open	**BES05U8** BES M08MM-PSC40B-BP00,3-GS49	**BES01ZW** BES M08MI-PSC40B-S49G	
NPN normally open		**BES01ZT** BES M08MI-NSC40B-S49G	
normally open			
Dimension	Ø 8 x 60 mm	Ø 8 x 60 mm	
Style	M8x1	M8x1	
Installation	quasi-flush	quasi-flush	
Range	4 mm	4 mm	
Switching frequency	1200 Hz	1200 Hz	
Housing material	Brass, Nickel-free coated	Brass, Nickel-free coated	
Material sensing surface	PBT	PBT	
Connection	Cable with connector, M8x1-Male, 3-pin, 0.3 m, PUR	Connector, M8x1-Male, 3-pin	
Operating voltage Ub	10...30 VDC	10...30 VDC	
Ambient temperature	-25...70 °C	-25...70 °C	
IP rating	IP67	IP68	
Approval/Conformity	CE, cULus, EAC, WEEE	CE, cULus, EAC, WEEE	
Productview	Page 121	Page 121	

	BES02W6 BES M08MH-PSC40B-S49G-507	**BES04TU** BES G10ED-PSC08B-EP00,3-GS49		
			BES02C9 BES 516-449-B0-L-05	**BES027M** BES 516-207-B0-E-03
	Ø 8 x 60 mm	Ø 10 x 27 mm	Ø 12 x 60 mm	Ø 12 x 60 mm
	M8x1	D10.0	M12x1	M12x1
	quasi-flush	flush	flush	flush
	4 mm	0.8 mm	2 mm	2 mm
	500 Hz	5000 Hz	25 Hz	1000 Hz
	Brass, Chrome-plated	Stainless steel	Brass, nickel plated	Stainless steel
	PBT	PBT	PA 12	PA 12
	Connector, M8x1-Male, 3-pin	Cable with connector, M8x1-Male, 3-pin, 0.30 m, PUR	Cable, 5.00 m, PVC	Cable, 3.00 m, PVC
	10...30 VDC	10...30 VDC	20...250 VAC	20...250 VDC/20...250 VAC
	-25...70 °C	-25...70 °C	-25...70 °C	-25...70 °C
	IP67	IP67	IP67	IP67
	CE, cULus, EAC, WEEE	CE, cULus, EAC, WEEE	CE, cULus, EAC, WEEE	CE, EAC, cULus, WEEE
	Page 122	Page 122	Page 122	Page 122

PNP normally open		**BES00E5** BES M12MD-PSC40B-BP02-003	
NPN normally open			
normally open	**BES027N** BES 516-207-B0-E-05		
Dimension	Ø 12 x 60 mm	Ø 12 x 33 mm	
Style	M12x1	M12x1	
Installation	flush	flush	
Range	2 mm	4 mm	
Switching frequency	1000 Hz	2500 Hz	
Housing material	Stainless steel	Brass, Nickel-free coated	
Material sensing surface	PA 12	PBT	
Connection	Cable, 5.00 m, PVC	Cable, 2.00 m, TPU	
Operating voltage Ub	20...250 VDC/20...250 VAC	10...30 VDC	
Ambient temperature	-25...70 °C	-25...70 °C	
IP rating	IP67	IP68	
Approval/Conformity	CE, EAC, cULus, WEEE	CE, cULus, EAC, WEEE	
Productview	Page 122	Page 122	

			BES0062 BES M12MI-PSC40B-BP03	**BES0064** BES M12MI-PSC40B-BV02
	BES0057 BES M12MI-NSC40B-BV03	**BES0058** BES M12MI-NSC40B-BV05		
	Ø 12 x 53 mm	Ø 12 x 53 mm	Ø 12 x 53 mm	Ø 12 x 53 mm
	M12x1	M12x1	M12x1	M12x1
	flush	flush	flush	flush
	4 mm	4 mm	4 mm	4 mm
	2500 Hz	2500 Hz	2500 Hz	2500 Hz
	Brass, Nickel-free coated	Brass, Nickel-free coated	Brass, Nickel-free coated	Brass, Nickel-free coated
	PBT	PBT	PBT	PBT
	Cable, 3.00 m, PVC	Cable, 5.00 m, PVC	Cable, 3.00 m, TPU	Cable, 2.00 m, PVC
	10...30 VDC	10...30 VDC	10...30 VDC	10...30 VDC
	-25...70 °C	-25...70 °C	-25...70 °C	-25...70 °C
	IP68	IP68	IP68	IP68
	CE, cULus, EAC, WEEE	CE, cULus, EAC, WEEE	CE, cULus, EAC, WEEE	CE, cULus, EAC, WEEE
	Page 122	Page 122	Page 122	Page 122

PNP normally open	**BES0001** BES M12MI-PSC40B-BV03	**BES0065** BES M12MI-PSC40B-BV05	
PNP normally closed			
PNP normally open/normally closed			
Dimension	Ø 12 x 53 mm	Ø 12 x 53 mm	
Style	M12x1	M12x1	
Installation	flush	flush	
Range	4 mm	4 mm	
Switching frequency	2500 Hz	2500 Hz	
Housing material	Brass, Nickel-free coated	Brass, Nickel-free coated	
Material sensing surface	PBT	PBT	
Connection	Cable, 3.00 m, PVC	Cable, 5.00 m, PVC	
Operating voltage Ub	10...30 VDC	10...30 VDC	
Ambient temperature	-25...70 °C	-25...70 °C	
IP rating	IP68	IP68	
Approval/Conformity	CE, cULus, EAC, WEEE	CE, cULus, EAC, WEEE	
Productview	Page 122	Page 122	

	BES00PW BES 516-325-G-E4-C-S4-00,5		**BES035E** BES 516-325-SA45	**BES00PK** BES 516-325-E5-C-S4
				BES00YT BES 516-370-E5-C-S4
		BES032M BES 516-113-SA3-S4-C		
	Ø 12 x 33 mm	Ø 12 x 70 mm	Ø 12 x 31 mm	Ø 12 x 45 mm
	M12x1	M12x1	M12x1	M12x1
	flush	flush	flush	flush
	4 mm	1.5 mm	2 mm	2 mm
	2500 Hz	2000 Hz	1000 Hz	3500 Hz
	Brass, Nickel-free coated	Stainless steel	Brass, nickel plated	Brass, Nickel-free coated
	PBT	PA 12	PA 12	PBT
	Cable with connector, M12x1-Male, 3-pin, 0.50 m, TPU	Connector, M12x1-Male, 4-pin	Connector, M12x1-Male, 4-pin	Connector, M12x1-Male, 4-pin
	10...30 VDC	10...30 VDC	10...30 VDC	10...30 VDC
	-25...70 °C	-25...85 °C	-25...70 °C	-25...70 °C
	IP68	IP68	IP67	IP68
	CE, cULus, EAC, WEEE	CE, cULus, EAC, WEEE	CE, EAC, WEEE	CE, cULus, EAC, WEEE
	Page 122	Page 122	Page 122	Page 123

PNP normally open	**BES0060** BES M12MI-PSC20B-S04G		
normally open			
IO-Link		**BES04FK** BES M12MI-PSIC20C-S04G	
Dimension	Ø 12 x 65 mm	Ø 12 x 65 mm	
Style	M12x1	M12x1	
Installation	flush	flush	
Range	2 mm	0.5...2 mm	
Switching frequency	3500 Hz	2000 Hz	
Housing material	Brass, Nickel-free coated	Brass, Nickel-free coated	
Material sensing surface	PBT	LCP	
Connection	Connector, M12x1-Male, 4-pin	Connector, M12x1-Male, 4-pin	
Operating voltage Ub	10...30 VDC	12...30 VDC	
Ambient temperature	-25...70 °C	-25...85 °C	
IP rating	IP68	IP68	
Approval/Conformity	CE, cULus, EAC, WEEE	CE, cULus, EAC, WEEE	
Productview	Page 123	Page 123	

				BES01C8 BES 516-325-S4-C
	BES02FP BES 515-449-SA7-S21	**BES027U** BES 516-207-S21-E	**BES027W** BES 516-207-S27-E	
	Ø 12 x 70 mm	Ø 12 x 70 mm	Ø 12 x 70 mm	Ø 12 x 70 mm
	M12x1	M12x1	M12x1	M12x1
	flush	flush	flush	flush
	2 mm	2 mm	2 mm	2 mm
	10 Hz	1000 Hz	1000 Hz	3500 Hz
	Stainless steel	Stainless steel	Stainless steel	Stainless steel
	PA 12	PA 12	PA 12	PBT
	Connector, 1/2“-20 UNF-2A-Male	Connector, 1/2“-20 UNF-2A-Male	Connector, M12x1-Male	Connector, M12x1-Male, 4-pin
	35...250 VAC	20...250 VDC/20...250 VAC	20...250 VDC/20...250 VAC	10...30 VDC
	-25...70 °C	-25...70 °C	-25...70 °C	-40...85 °C
	IP67	IP67	IP67	IP68
	CE, EAC, WEEE	CE, cULus, EAC, WEEE	CE, cULus, EAC, WEEE	CE, cULus, EAC, WEEE
	Page 123	Page 123	Page 123	Page 123

PNP normally open			
PNP normally closed		**BES01K6** BES 516-370-S4-C	
PNP normally open/normally closed	**BES0161** BES 516-113-S4-C		
Dimension	Ø 12 x 70 mm	Ø 12 x 70 mm	
Style	M12x1	M12x1	
Installation	flush	flush	
Range	2 mm	2 mm	
Switching frequency	3500 Hz	3500 Hz	
Housing material	Stainless steel	Stainless steel	
Material sensing surface	PBT	PBT	
Connection	Connector, M12x1-Male, 4-pin	Connector, M12x1-Male, 4-pin	
Operating voltage Ub	10...30 VDC	10...30 VDC	
Ambient temperature	-40...85 °C	-40...85 °C	
IP rating	IP68	IP68	
Approval/Conformity	CE, cULus, EAC, WEEE	CE, cULus, EAC, WEEE	
Productview	Page 123	Page 123	

	BES00PZ BES 516-325-G-E5-C-S49	BES00EF BES M12ME-PSC40B-S04G-003	BES00PY BES 516-325-G-E5-C-S4	BES014W BES M12EE-PSC40B-S04G
	Ø 12 x 44 mm	Ø 12 x 45 mm	Ø 12 x 45 mm	Ø 12 x 45 mm
	M12x1	M12x1	M12x1	M12x1
	flush	flush	flush	flush
	4 mm	4 mm	4 mm	4 mm
	2500 Hz	2500 Hz	2500 Hz	2000 Hz
	Brass, Nickel-free coated	Brass, Nickel-free coated	Brass, Nickel-free coated	Stainless steel
	LCP	PBT	PBT	LCP
	Connector, M8x1-Male, 3-pin	Connector, M12x1-Male, 4-pin	Connector, M12x1-Male, 4-pin	Connector, M12x1-Male, 4-pin
	10...30 VDC	10...30 VDC	10...30 VDC	10...30 VDC
	-25...70 °C	-25...70 °C	-25...70 °C	-25...85 °C
	IP67	IP68	IP68	IP68
	CE, cULus, EAC, WEEE	CE, cULus, EAC, WEEE	CE, cULus, EAC, WEEE	CE, cULus, EAC, WEEE
	Page 123	Page 123	Page 123	Page 123

PNP normally open		**BES0068** BES M12MI-PSC40B-S04G	
PNP normally closed	**BES00Z0** BES 516-370-G-E5-C-S4	**BES005N** BES M12MI-POC40B-S04G	
NPN normally open		**BES0059** BES M12MI-NSC40B-S04G	
normally open			
Dimension	Ø 12 x 45 mm	Ø 12 x 65 mm	
Style	M12x1	M12x1	
Installation	flush	flush	
Range	4 mm	4 mm	
Switching frequency	2500 Hz	2500 Hz	
Housing material	Brass, Nickel-free coated	Brass, Nickel-free coated	
Material sensing surface	PBT	PBT	
Connection	Connector, M12x1-Male, 4-pin	Connector, M12x1-Male, 3-pin	
Operating voltage Ub	10...30 VDC	10...30 VDC	
Ambient temperature	-25...70 °C	-25...70 °C	
IP rating	IP68	IP68	
Approval/Conformity	CE, cULus, EAC, WEEE	CE, cULus, EAC, WEEE	
Productview	Page 123	Page 123	

	BES02FU BES M12EI-PSC40B-S04G		**BES01C7** BES 516-325-G-S4-C	**BES03AR** BES 516-325-G-S4-L
		BES027T BES 516-207-G-S21-E		
	Ø 12 x 65 mm	Ø 12 x 70 mm	Ø 12 x 70 mm	Ø 12 x 70 mm
	M12x1	M12x1	M12x1	M12x1
	flush	flush	flush	flush
	4 mm	4 mm	4 mm	4 mm
	1000 Hz	500 Hz	2500 Hz	600 Hz
	Stainless steel	Stainless steel	Brass, Nickel-free coated	Brass, nickel plated
	LCP	PA 12	PBT	LCP
	Connector, M12x1-Male, 4-pin	Connector, 1/2“-20 UNF-2A-Male	Connector, M12x1-Male, 4-pin	Connector, M12x1-Male, 4-pin
	10...30 VDC	20...250 VDC/20...250 VAC	10...30 VDC	10...30 VDC
	-25...85 °C	-25...70 °C	-25...70 °C	-25...70 °C
	IP68	IP67	IP68	IP67
	CE, cULus, EAC, WEEE	CE, EAC, cULus, WEEE	CE, cULus, EAC, WEEE	CE, cULus, EAC, WEEE
	Page 124	Page 123	Page 123	Page 124

PNP normally open			
normally open	**BES0285** BES 516-209-B0-E-03	**BES0286** BES 516-209-B0-E-05	
normally closed	**BES028F** BES 516-210-B0-E-03		
Dimension	Ø 12 x 60 mm	Ø 12 x 60 mm	
Style	M12x1	M12x1	
Installation	non-flush	non-flush	
Range	4 mm	4 mm	
Switching frequency	600 Hz	600 Hz	
Housing material	Stainless steel	Stainless steel	
Material sensing surface	PA 12	PA 12	
Connection	Cable, 3.00 m, PVC	Cable, 5.00 m, PVC	
Operating voltage Ub	20...250 VDC/20...250 VAC	20...250 VDC/20...250 VAC	
Ambient temperature	-25...70 °C	-25...70 °C	
IP rating	IP67	IP67	
Approval/Conformity	CE, EAC, cULus, WEEE	CE, EAC, cULus, WEEE	
Productview	Page 124	Page 124	

	BES00UY BES 516-356-E5-C-S4	**BES036T** BES 516-356-SA26-S4-C		
			BES028A BES 516-209-S21-E	**BES0330** BES 516-209-SA1-S21-E
	Ø 12 x 50 mm	Ø 12 x 61 mm	Ø 12 x 70 mm	Ø 12 x 70 mm
	M12x1	M12x1	M12x1	M12x1
	non-flush	non-flush	non-flush	non-flush
	4 mm	4 mm	4 mm	4 mm
	2500 Hz	1000 Hz	600 Hz	600 Hz
	Brass, Nickel-free coated	Stainless steel	Stainless steel	Stainless steel
	PBT	PA 12	PA 12	PA 12
	Connector, M12x1-Male, 4-pin	Connector, M12x1-Male, 4-pin	Connector, 1/2“-20 UNF-2A-Male	Connector, 1/2“-20 UNF-2A-Male
	10...30 VDC	10...30 VDC	20...250 VDC/20...250 VAC	20...250 VDC/20...250 VAC
	-25...70 °C	-25...70 °C	-25...70 °C	-25...70 °C
	IP68	IP68	IP67	IP67
	CE, cULus, EAC, WEEE	CE, EAC, WEEE	CE, cULus, EAC, WEEE	CE, EAC, WEEE
	Page 124	Page 124	Page 124	Page 124

PNP normally open	**BES01H6** BES 516-356-S4-C	**BES036R** BES 516-356-SA24-S4-C	
PNP normally open/normally closed			
Dimension	Ø 12 x 70 mm	Ø 12 x 70 mm	
Style	M12x1	M12x1	
Installation	non-flush	non-flush	
Range	4 mm	4 mm	
Switching frequency	2500 Hz	1500 Hz	
Housing material	Stainless steel	Stainless steel	
Material sensing surface	PBT	PA 12	
Connection	Connector, M12x1-Male, 4-pin	Connector, M12x1-Male, 4-pin	
Operating voltage Ub	10...30 VDC	10...30 VDC	
Ambient temperature	-40...85 °C	-40...85 °C	
IP rating	IP68	IP68	
Approval/Conformity	CE, cULus, EAC, WEEE	CE, EAC, WEEE	
Productview	Page 124	Page 125	

	BES01PY BES M12MD-PSC80F-S04G	BES01PN BES M12EG-PSC80F-S04G	BES004N BES M12MG-PSC80F-S04G
BES0178 BES 516-131-S4-C			
Ø 12 x 70 mm	Ø 12 x 45 mm	Ø 12 x 60 mm	Ø 12 x 60 mm
M12x1	M12x1	M12x1	M12x1
non-flush	non-flush	non-flush	non-flush
4 mm	8 mm	8 mm	8 mm
2500 Hz	1000 Hz	1000 Hz	1000 Hz
Stainless steel	Brass, Nickel-free coated	Stainless steel	Brass, Nickel-free coated
PBT	PBT	PBT	PBT
Connector, M12x1-Male, 4-pin	Connector, M12x1-Male, 4-pin	Connector, M12x1-Male, 4-pin	Connector, M12x1-Male, 4-pin
10...30 VDC	10...30 VDC	10...30 VDC	10...30 VDC
-40...85 °C	-25...70 °C	-40...85 °C	-25...70 °C
IP68	IP68	IP68	IP68
CE, cULus, EAC, WEEE	CE, cULus, EAC, WEEE	CE, cULus, EAC, WEEE	CE, cULus, EAC, WEEE
Page 124	Page 125	Page 125	Page 125

PNP normally open		**BES02WK** BES M12MC1-PSC10F-S04G	
PNP normally closed			
normally open	**BES0289** BES 516-209-G-S21-E		
Dimension	Ø 12 x 70 mm	Ø 12 x 45 mm	
Style	M12x1	M12x1	
Installation	non-flush	non-flush	
Range	8 mm	10 mm	
Switching frequency	600 Hz	600 Hz	
Housing material	Stainless steel	Brass, Nickel-free coated	
Material sensing surface	PA 12	PBT	
Connection	Connector, 1/2“-20 UNF-2A-Male	Connector, M12x1-Male, 3-pin	
Operating voltage Ub	20...250 VDC/20...250 VAC	10...30 VDC	
Ambient temperature	-25...70 °C	-25...85 °C	
IP rating	IP67	IP68	
Approval/Conformity	CE, cULus, EAC, WEEE	CE, cULus, EAC, WEEE	
Productview	Page 124	Page 125	

	BES02WR BES M12MF1-PSC10F-S04G	BES02WM BES M12MD1-PSC60B-S04G	BES02WZ BES M12MG1-PSC60B-S04G	BES01ZN BES M12MI-PSH80B-S04G
			BES02WY BES M12MG1-POC60B-S04G	
	Ø 12 x 60 mm	Ø 12 x 45 mm	Ø 12 x 60 mm	Ø 12 x 65 mm
	M12x1	M12x1	M12x1	M12x1
	non-flush	quasi-flush	quasi-flush	quasi-flush
	10 mm	6 mm	6 mm	8 mm
	600 Hz	1000 Hz	1000 Hz	300 Hz
	Brass, Nickel-free coated	Brass, Nickel-free coated	Brass, Nickel-free coated	Brass, nickel plated
	PBT	PBT	PBT	LCP
	Connector, M12x1-Male, 3-pin	Connector, M12x1-Male, 3-pin	Connector, M12x1-Male, 3-pin	Connector, M12x1-Male, 4-pin
	10...30 VDC	10...30 VDC	10...30 VDC	10...55 VDC
	-25...85 °C	-25...85 °C	-25...85 °C	0...60 °C
	IP68	IP68	IP68	IP67
	CE, cULus, EAC, WEEE	CE, cULus, EAC, WEEE	CE, cULus, EAC, WEEE	CE, EAC, WEEE
	Page 125	Page 123	Page 125	Page 125

PNP normally open			
normally open	**BES02AU** BES 516-420-E4-L-02	**BES02AW** BES 516-420-E4-L-05	
Dimension	Ø 18 x 56 mm	Ø 18 x 56 mm	
Style	M18x1	M18x1	
Installation	flush	flush	
Range	5 mm	5 mm	
Switching frequency	25 Hz	25 Hz	
Housing material	Brass, nickel plated	Brass, nickel plated	
Material sensing surface	PA 12	PA 12	
Connection	Cable, 2.00 m, PVC	Cable, 5.00 m, PVC	
Operating voltage Ub	20...250 VAC	20...250 VAC	
Ambient temperature	-25...70 °C	-25...70 °C	
IP rating	IP67	IP67	
Approval/Conformity	CE, cULus, EAC, WEEE	CE, cULus, EAC, WEEE	
Productview	Page 126	Page 126	

	BES0083 BES M18MI-PSC50B-BV03			
		BES028L BES 516-211-E4-E-03	BES028N BES 516-211-E4-E-PU-05	BES028U BES 516-211-E6-E-05
	Ø 18 x 55 mm	Ø 18 x 61.5 mm	Ø 18 x 61.5 mm	Ø 18 x 71 mm
	M18x1	M18x1	M18x1	M18x1
	flush	flush	flush	flush
	5 mm	5 mm	5 mm	5 mm
	2000 Hz	250 Hz	250 Hz	250 Hz
	Brass, Nickel-free coated	Brass, nickel plated	Brass, nickel plated	Brass, nickel plated
	PBT	PA 12	PA 12	PA 12
	Cable, 3.00 m, PVC	Cable, 3.00 m, PVC	Cable, 5.00 m, PUR	Cable, 5.00 m, PVC
	10...30 VDC	20...250 VDC/20...250 VAC	20...250 VDC/20...250 VAC	20...250 VDC/20...250 VAC
	-40...85 °C	-25...70 °C	-25...70 °C	-25...70 °C
	IP68	IP67	IP67	IP67
	CE, cULus, EAC, WEEE	CE, EAC, cULus, WEEE	CE, EAC, cULus, WEEE	CE, EAC, cULus, WEEE
	Page 126	Page 126	Page 126	Page 126

PNP normally open	**BES04F1** BES M18MD-PSC80B-BP05-003	**BES008E** BES M18MI-PSC80B-BV02	
NPN normally open			
Dimension	Ø 18 x 36 mm	Ø 18 x 55 mm	
Style	M18x1	M18x1	
Installation	flush	flush	
Range	8 mm	8 mm	
Switching frequency	150 Hz	1300 Hz	
Housing material	Brass, nickel plated	Brass, Nickel-free coated	
Material sensing surface	PBT	PBT	
Connection	Cable, 5.00 m, PUR	Cable, 2.00 m, PVC	
Operating voltage Ub	10...30 VDC	10...30 VDC	
Ambient temperature	-25...70 °C	-40...85 °C	
IP rating	IP67	IP68	
Approval/Conformity	CE, cULus, EAC, WEEE	CE, cULus, EAC, WEEE	
Productview	Page 126	Page 126	

			BES0089 BES M18MI-PSC80B-BP03	**BES008F** BES M18MI-PSC80B-BV03
	BES007H BES M18MI-NSC80B-BP03	**BES007J** BES M18MI-NSC80B-BV03		
	Ø 18 x 55 mm	Ø 18 x 55 mm	Ø 18 x 55 mm	Ø 18 x 55 mm
	M18x1	M18x1	M18x1	M18x1
	flush	flush	flush	flush
	8 mm	8 mm	8 mm	8 mm
	1300 Hz	1300 Hz	1300 Hz	1300 Hz
	Brass, Nickel-free coated	Brass, Nickel-free coated	Brass, Nickel-free coated	Brass, Nickel-free coated
	PBT	PBT	PBT	PBT
	Cable, 3.00 m, PUR	Cable, 3.00 m, PVC	Cable, 3.00 m, PUR	Cable, 3.00 m, PVC
	10...30 VDC	10...30 VDC	10...30 VDC	10...30 VDC
	-40...85 °C	-40...85 °C	-40...85 °C	-40...85 °C
	IP68	IP68	IP68	IP68
	CE, cULus, EAC, WEEE	CE, cULus, EAC, WEEE	CE, cULus, EAC, WEEE	CE, cULus, EAC, WEEE
	Page 126	Page 126	Page 126	Page 126

PNP normally open	BES008H BES M18MI-PSC80B-BV05	BES00R5 BES 516-326-E4-C-S4-00,2	
Dimension	Ø 18 x 55 mm	Ø 18 x 36 mm	
Style	M18x1	M18x1	
Installation	flush	flush	
Range	8 mm	5 mm	
Switching frequency	1300 Hz	1000 Hz	
Housing material	Brass, Nickel-free coated	Brass, nickel plated	
Material sensing surface	PBT	PA 12	
Connection	Cable, 5.00 m, PVC	Cable with connector, M12x1-Male, 4-pin, 0.20 m, PUR	
Operating voltage Ub	10...30 VDC	10...30 VDC	
Ambient temperature	-40...85 °C	-25...70 °C	
IP rating	IP68	IP67	
Approval/Conformity	CE, cULus, EAC, WEEE	CE, cULus, EAC, WEEE	
Productview	Page 126	Page 126	

	BES00EY BES M18ME-PSC50B-S04G-003	BES00R6 BES 516-326-E5-C-S4	BES02ET BES 515-326-E5-T-S4	BES0086 BES M18MI-PSC50B-S04G
	Ø 18 x 46 mm	Ø 18 x 44.5 mm	Ø 18 x 45 mm	Ø 18 x 66 mm
	M18x1	M18x1	M18x1	M18x1
	flush	flush	flush	flush
	5 mm	5 mm	5 mm	5 mm
	2000 Hz	1000 Hz	500 Hz	2000 Hz
	Brass, Nickel-free coated	Brass, nickel plated	Stainless steel	Brass, Nickel-free coated
	PBT	PBT	PA 12	PBT
	Connector, M12x1-Male, 3-pin	Connector, M12x1-Male, 4-pin	Connector, M12x1-Male, 4-pin	Connector, M12x1-Male, 3-pin
	10...30 VDC	10...30 VDC	10...30 VDC	10...30 VDC
	-40...85 °C	-25...70 °C	-40...105 °C	-40...85 °C
	IP68	IP67	IP68	IP68
	CE, cULus, EAC, WEEE	CE, cULus, EAC, WEEE	CE, cULus, EAC, WEEE	CE, cULus, EAC, WEEE
	Page 127	Page 126	Page 127	Page 127

PNP normally open		**BES02EU** BES 515-326-S4-C	
PNP normally closed			
PNP normally open/normally closed			
normally open	**BES028R** BES 516-211-E5-E-S27		
Dimension	Ø 18 x 70.5 mm	Ø 18 x 83 mm	
Style	M18x1	M18x1	
Installation	flush	flush	
Range	5 mm	5 mm	
Switching frequency	400 Hz	900 Hz	
Housing material	Brass, nickel plated	Stainless steel	
Material sensing surface	PA 12	PA 12	
Connection	Connector, M12x1-Male	Connector, M12x1-Male, 4-pin	
Operating voltage Ub	20...250 VDC/20...250 VAC	10...30 VDC	
Ambient temperature	-25...70 °C	-40...85 °C	
IP rating	IP67	IP68	
Approval/Conformity	CE, cULus, EAC, WEEE	CE, cULus, EAC, WEEE	
Productview	Page 127	Page 127	

	BES01CW BES 516-326-S4-C		**BES00RC** BES 516-326-G-E5-C-S4	**BES02P3** BES 516-326-SA96-G-E5-Y-S4
	BES01JW BES 516-367-S4-C			
		BES015N BES 516-105-S4-C		
	Ø 18 x 83 mm	Ø 18 x 83 mm	Ø 18 x 44.5 mm	Ø 18 x 44.5 mm
	M18x1	M18x1	M18x1	M18x1
	flush	flush	flush	flush
	5 mm	5 mm	8 mm	8 mm
	900 Hz	500 Hz	200 Hz	200 Hz
	Brass, nickel plated	Brass, nickel plated	Brass, nickel plated	Brass, nickel plated
	PA 12	PA 12	PBT	ceramic coated
	Connector, M12x1-Male, 4-pin	Connector, M12x1-Male, 4-pin	Connector, M12x1-Male, 4-pin	Connector, M12x1-Male, 4-pin
	10...30 VDC	10...30 VDC	10...30 VDC	10...30 VDC
	-25...70 °C	-25...70 °C	-25...70 °C	-25...70 °C
	IP68	IP68	IP67	IP67
	CE, cULus, EAC, WEEE	CE, cULus, EAC, WEEE	CE, cULus, EAC, WEEE	CE, cULus, EAC, WEEE
	Page 127	Page 127	Page 126	Page 126

PNP normally open	**BES008L** BES M18MI-PSC80B-S04G	**BES02H0** BES M18EI-PSC80B-S04G	
PNP normally closed	**BES03RP** BES M18MI-POC80B-S04G		
NPN normally open	**BES007M** BES M18MI-NSC80B-S04K		
normally open			
Dimension	Ø 18 x 66 mm	Ø 18 x 65 mm	
Style	M18x1	M18x1	
Installation	flush	flush	
Range	8 mm	8 mm	
Switching frequency	1300 Hz	700 Hz	
Housing material	Brass, Nickel-free coated	Stainless steel, Ceramic	
Material sensing surface	PBT	PBT	
Connection	Connector, M12x1-Male, 3-pin	Connector, M12x1-Male, 4-pin	
Operating voltage Ub	10...30 VDC	10...30 VDC	
Ambient temperature	-40...85 °C	-40...85 °C	
IP rating	IP68	IP68	
Approval/Conformity	CE, cULus, EAC, WEEE	CE, cULus, EAC, WEEE	
Productview	Page 127	Page 127	

		BES0496 BES M18MI2-PSC80B-S04G		
	BES02ZE BES M18MN-USU80B-S21G		**BES02C5** BES 516-437-E4-L-02	
	Ø 18 x 70 mm	Ø 18 x 83 mm	Ø 18 x 61.5 mm	
	M18x1	M18x1	M18x1	
	flush	flush	non-flush	
	8 mm	8 mm	8 mm	
	30 Hz	1000 Hz	25 Hz	
	Brass, nickel plated	Brass, Nickel-free coated	Brass, nickel plated	
	PBT	PBT	PA 12	
	Connector, 1/2“-20 UNF-2A-Male, 3-pin	Connector, M12x1-Male, 4-pin	Cable, 2.00 m, PVC	
	20...300 VDC/20...250 VAC	10...30 VDC	20...250 VAC	
	-25...70 °C	-25...70 °C	-25...70 °C	
	IP67	IP68	IP67	
	CE, EAC, cULus, WEEE	CE, cULus, EAC, WEEE	CE, cULus, EAC, WEEE	
	Page 128	Page 128	Page 128	

PNP normally open		**BES00WM** BES 516-360-E5-Y-S4	
normally open	**BES0292** BES 516-213-E4-E-03		
Dimension	Ø 18 x 61.5 mm	Ø 18 x 54 mm	
Style	M18x1	M18x1	
Installation	non-flush	non-flush	
Range	8 mm	8 mm	
Switching frequency	250 Hz	200 Hz	
Housing material	Brass, nickel plated	Brass, nickel plated	
Material sensing surface	PA 12	PA 12	
Connection	Cable, 3.00 m, PVC	Connector, M12x1-Male, 4-pin	
Operating voltage Ub	20...250 VDC/20...250 VAC	10...30 VDC	
Ambient temperature	-25...70 °C	-25...70 °C	
IP rating	IP67	IP67	
Approval/Conformity	CE, EAC, cULus, WEEE	CE, cULus, EAC, WEEE	
Productview	Page 128	Page 128	

	BES02C7 BES 516-437-E5-L-S21	BES0296 BES 516-213-E5-E-S21	BES0297 BES 516-213-E5-E-S27	BES0298 BES 516-213-E5-E-S5
	Ø 18 x 65 mm	Ø 18 x 70.5 mm	Ø 18 x 70.5 mm	Ø 18 x 80 mm
	M18x1	M18x1	M18x1	M18x1
	non-flush	non-flush	non-flush	non-flush
	8 mm	8 mm	8 mm	8 mm
	25 Hz	250 Hz	250 Hz	250 Hz
	Brass, nickel plated	Brass, nickel plated	Brass, nickel plated	Brass, nickel plated
	PA 12	PA 12	PA 12	PA 12
	Connector, 1/2“-20 UNF-2A-Male	Connector, 1/2“-20 UNF-2A-Male	Connector, M12x1-Male	Connector, 7/8“-16 UN-Male
	20...250 VAC	20...250 VAC	20...250 VAC	20...250 VDC/20...250 VAC
	-25...70 °C	-25...70 °C	-25...70 °C	-25...70 °C
	IP67	IP67	IP67	IP67
	CE, cULus, EAC, WEEE	CE, cULus, EAC, WEEE	CE, cULus, EAC, WEEE	CE, cULus, EAC, WEEE
	Page 128	Page 128	Page 128	Page 128

Do you need more details? Our Product Finder at www.balluff.com provides you with product-specific information, including technical drawings, data sheets, user guides and more for each individual product. All items are available for download.

PNP normally open	**BES01HY** BES 516-360-S4-C	**BES03RM** BES M18MG-PSC16F-S04G	
PNP normally open/normally closed			
Dimension	Ø 18 x 83 mm	Ø 18 x 66 mm	
Style	M18x1	M18x1	
Installation	non-flush	non-flush	
Range	8 mm	16 mm	
Switching frequency	600 Hz	430 Hz	
Housing material	Brass, nickel plated	Brass, Nickel-free coated	
Material sensing surface	PA 12	PBT	
Connection	Connector, M12x1-Male, 4-pin	Connector, M12x1-Male, 3-pin	
Operating voltage Ub	10...30 VDC	10...30 VDC	
Ambient temperature	-25...70 °C	-40...85 °C	
IP rating	IP68	IP68	
Approval/Conformity	CE, cULus, EAC, WEEE	CE, cULus, EAC, WEEE	
Productview	Page 129	Page 129	

	BES0070 BES M18MG-PSC16F-S04K	BES01HW BES 516-360-G-S4-H		
			BES016W BES 516-123-G-S4-H	
	Ø 18 x 65 mm	Ø 18 x 83 mm	Ø 18 x 83 mm	
	M18x1	M18x1	M18x1	
	non-flush	non-flush	non-flush	
	16 mm	16 mm	16 mm	
	800 Hz	80 Hz	80 Hz	
	Brass, Nickel-free coated	Brass, nickel plated	Brass, nickel plated	
	PBT	PA 12	PA 12	
	Connector, M12x1-Male, 4-pin	Connector, M12x1-Male, 4-pin	Connector, M12x1-Male, 4-pin	
	10...30 VDC	10...55 VDC	10...55 VDC	
	-25...70 °C	-25...70 °C	-25...70 °C	
	IP67	IP68	IP68	
	CE, cULus, EAC, WEEE	CE, EAC, WEEE	CE, EAC, WEEE	
	Page 129	Page 129	Page 129	

PNP normally open	**BES05EY** BES M18MG-PSC20F-S04G	**BES05ER** BES M18ME-PSC12B-S04G	
NPN normally open			
normally open			
Dimension	Ø 18 x 66 mm	Ø 18 x 46 mm	
Style	M18x1	M18x1	
Installation	—	quasi-flush	
Range	20 mm	12 mm	
Switching frequency	400 Hz	550 Hz	
Housing material	Brass, Nickel-free coated	Brass, Nickel-free coated	
Material sensing surface	PBT	PBT	
Connection	Connector, M12x1-Male, 3-pin	Connector, M12x1-Male, 3-pin	
Operating voltage Ub	10...30 VDC	10...30 VDC	
Ambient temperature	-25...70 °C	-25...70 °C	
IP rating	IP68	IP68	
Approval/Conformity	CE, cULus, EAC, WEEE	CE, cULus, EAC, WEEE	
Productview	Page 126	Page 129	

	BES05EU BES M18MI-PSC12B-S04G	**BES00RE** BES 516-327-E4-Y-01,5	**BES00A1** BES M30MI-PSC10B-BV03	
			BES009E BES M30MI-NSC10B-BV03	
				BES029L BES 516-215-E4-E-03
	Ø 18 x 66 mm	Ø 30 x 36 mm	Ø 30 x 56 mm	Ø 30 x 61.5 mm
	M18x1	M30x1.5	M30x1.5	M30x1.5
	—	flush	flush	flush
	12 mm	10 mm	10 mm	10 mm
	550 Hz	200 Hz	400 Hz	150 Hz
	Brass, Nickel-free coated	Brass, nickel plated	Brass, nickel plated	Brass, nickel plated
	PBT	PA 12	PA 12	PA 12
	Connector, M12x1-Male, 3-pin	Cable, 1.50 m, PVC	Cable, 3.00 m, PVC	Cable, 3.00 m, PVC
	10...30 VDC	10...30 VDC	12...30 VDC	20...250 VDC/20...250 VAC
	-25...70 °C	-25...70 °C	-25...70 °C	-25...70 °C
	IP68	IP68	IP68	IP67
	CE, cULus, EAC, WEEE	CE, cULus, EAC, WEEE	CE, cULus, EAC, WEEE	CE, EAC, cULus, WEEE
	Page 125	Page 129	Page 129	Page 129

PNP normally open		**BES00RT** BES 516-327-G-E4-Y-03	
PNP normally closed			
normally open	**BES029M** BES 516-215-E4-E-05		
Dimension	Ø 30 x 61.5 mm	Ø 30 x 36 mm	
Style	M30x1.5	M30x1.5	
Installation	flush	flush	
Range	10 mm	15 mm	
Switching frequency	150 Hz	100 Hz	
Housing material	Brass, nickel plated	Brass, nickel plated	
Material sensing surface	PA 12	PA 12	
Connection	Cable, 5.00 m, PVC	Cable, 3.00 m, PVC	
Operating voltage Ub	20...250 VDC/20...250 VAC	10...30 VDC	
Ambient temperature	-25...70 °C	-25...70 °C	
IP rating	IP67	IP68	
Approval/Conformity	CE, EAC, cULus, WEEE	CE, cULus, EAC, WEEE	
Productview	Page 129	Page 129	

		BES00AA BES M30MI-PSC15B-BV02	**BES00AC** BES M30MI-PSC15B-BV03	
	BES00LR BES 516-3028-G-E4-Y-PU-05			**BES00LT** BES 516-3028-G-E4-Y-S4-01
	Ø 30 x 36 mm	Ø 30 x 53 mm	Ø 30 x 53 mm	Ø 30 x 36 mm
	M30x1.5	M30x1.5	M30x1.5	M30x1.5
	flush	flush	flush	flush
	15 mm	15 mm	15 mm	15 mm
	100 Hz	100 Hz	100 Hz	100 Hz
	Brass, nickel plated	Brass, Nickel-free coated	Brass, Nickel-free coated	Brass, nickel plated
	PA 12	PA 12	PA 12	PA 12
	Cable, 5.00 m, TPU	Cable, 2.00 m, PVC	Cable, 3.00 m, PVC	Cable with connector, M12x1-Male, 4-pin, 1.00 m, PUR
	10...30 VDC	10...30 VDC	10...30 VDC	10...30 VDC
	-25...70 °C	-25...70 °C	-25...70 °C	-25...70 °C
	IP68	IP67	IP67	IP68
	CE, cULus, EAC, WEEE	CE, cULus, EAC, WEEE	CE, cULus, EAC, WEEE	CE, cULus, EAC, WEEE
	Page 129	Page 129	Page 129	Page 130

PNP normally open	**BES00RP** BES 516-327-E5-Y-S4	**BES02F0** BES 515-327-E5-T-S4	
normally open			
Dimension	Ø 30 x 44.5 mm	Ø 30 x 45 mm	
Style	M30x1.5	M30x1.5	
Installation	flush	flush	
Range	10 mm	10 mm	
Switching frequency	200 Hz	200 Hz	
Housing material	Brass, nickel plated	Stainless steel	
Material sensing surface	PA 12	PA 12	
Connection	Connector, M12x1-Male, 4-pin	Connector, M12x1-Male, 4-pin	
Operating voltage Ub	10...30 VDC	10...30 VDC	
Ambient temperature	-25...70 °C	-40...105 °C	
IP rating	IP67	IP68	
Approval/Conformity	CE, cULus, EAC, WEEE	CE, cULus, EAC, WEEE	
Productview	Page 130	Page 130	

	BES00A3 BES M30MI-PSC10B-S04G	BES00A4 BES M30MI-PSC10B-S04K		
			BES0316 BES 516-418-E5-L-S27	BES02E9 BES 515-215-E5-E-S21
	Ø 30 x 65 mm	Ø 30 x 65 mm	Ø 30 x 65 mm	Ø 30 x 70.5 mm
	M30x1.5	M30x1.5	M30x1.5	M30x1.5
	flush	flush	flush	flush
	10 mm	10 mm	10 mm	10 mm
	400 Hz	400 Hz	25 Hz	150 Hz
	Brass, nickel plated	Brass, nickel plated	Brass, nickel plated	Stainless steel
	PA 12	PA 12	PA 12	PA 12
	Connector, M12x1-Male, 4-pin	Connector, M12x1-Male, 4-pin	Connector, M12x1-Male	Connector, 1/2"-20 UNF-2A-Male
	12...30 VDC	12...30 VDC	20...250 VAC	20...250 VDC/20...250 VAC
	-25...70 °C	-25...70 °C	-25...70 °C	-25...70 °C
	IP67	IP68	IP67	IP67
	CE, cULus, EAC, WEEE	CE, cULus, EAC, WEEE	CE, cULus, EAC, WEEE	CE, cULus, EAC, WEEE
	Page 130	Page 130	Page 130	Page 130

PNP normally open		**BES02F1** BES 515-327-S4-C	
PNP normally closed			
PNP normally open/normally closed			
normally open	**BES029W** BES 516-215-E5-E-S5		
Dimension	Ø 30 x 80 mm	Ø 30 x 83 mm	
Style	M30x1.5	M30x1.5	
Installation	flush	flush	
Range	10 mm	10 mm	
Switching frequency	150 Hz	300 Hz	
Housing material	Brass, nickel plated	Stainless steel	
Material sensing surface	PA 12	PA 12	
Connection	Connector, 7/8“-16 UN-Male	Connector, M12x1-Male, 4-pin	
Operating voltage Ub	20...250 VDC/20...250 VAC	10...30 VDC	
Ambient temperature	-25...70 °C	-25...70 °C	
IP rating	IP67	IP68	
Approval/Conformity	CE, cULus, EAC, WEEE	CE, cULus, EAC, WEEE	
Productview	Page 130	Page 131	

	BES01EE BES 516-327-S4-C		**BES00RW** BES 516-327-G-E5-Y-S4	**BES00AF** BES M30MI-PSC15B-S04G
			BES00LU BES 516-3028-G-E5-Y-S4	
		BES0167 BES 516-114-S4-C		
	Ø 30 x 83 mm	Ø 30 x 83 mm	Ø 30 x 44.5 mm	Ø 30 x 65 mm
	M30x1.5	M30x1.5	M30x1.5	M30x1.5
	flush	flush	flush	flush
	10 mm	10 mm	15 mm	15 mm
	300 Hz	300 Hz	100 Hz	100 Hz
	Brass, nickel plated	Brass, nickel plated	Brass, nickel plated	Brass, Nickel-free coated
	PA 12	PA 12	PA 12	PA 12
	Connector, M12x1-Male, 4-pin	Connector, M12x1-Male, 4-pin	Connector, M12x1-Male, 4-pin	Connector, M12x1-Male, 4-pin
	10...30 VDC	10...30 VDC	10...30 VDC	10...30 VDC
	-25...70 °C	-25...70 °C	-25...70 °C	-25...70 °C
	IP68	IP68	IP68	IP67
	CE, cULus, EAC, WEEE	CE, cULus, EAC, WEEE	CE, cULus, EAC, WEEE	CE, cULus, EAC, WEEE
	Page 131	Page 131	Page 130	Page 131

PNP normally open	**BES01EA** BES 516-327-G-S4-C	**BES01EC** BES 516-327-G-S4-H	
PNP normally open/normally closed			
normally open			
Dimension	Ø 30 x 83 mm	Ø 30 x 83 mm	
Style	M30x1.5	M30x1.5	
Installation	flush	flush	
Range	15 mm	15 mm	
Switching frequency	100 Hz	150 Hz	
Housing material	Brass, Nickel-free coated	Brass, Nickel-free coated	
Material sensing surface	PA 12	PA 12	
Connection	Connector, M12x1-Male, 4-pin	Connector, M12x1-Male, 4-pin	
Operating voltage Ub	10...30 VDC	10...55 VDC	
Ambient temperature	-25...70 °C	-25...70 °C	
IP rating	IP67	IP68	
Approval/Conformity	CE, cULus, EAC, WEEE	CE, EAC, WEEE	
Productview	Page 131	Page 131	

			BES00AY BES M30MM-PSC30F-BV02	**BES00Y0** BES 516-362-E5-Y-S4
	BES0166 BES 516-114-G-S4-H			
		BES02A5 BES 516-217-E4-E-03		
	Ø 30 x 83 mm	Ø 30 x 61.5 mm	Ø 30 x 76.5 mm	Ø 30 x 57 mm
	M30x1.5	M30x1.5	M30x1.5	M30x1.5
	flush	non-flush	non-flush	non-flush
	15 mm	15 mm	30 mm	15 mm
	150 Hz	100 Hz	300 Hz	100 Hz
	Brass, Nickel-free coated	Brass, nickel plated	Brass, Nickel-free coated	Brass, nickel plated
	PA 12	PA 12	PBT	PA 12
	Connector, M12x1-Male, 4-pin	Cable, 3.00 m, PVC	Cable, 2.00 m, PVC	Connector, M12x1-Male, 4-pin
	10...55 VDC	20...250 VDC/20...250 VAC	10...30 VDC	10...30 VDC
	-25...70 °C	-25...70 °C	-25...70 °C	-25...70 °C
	IP68	IP67	IP67	IP67
	CE, EAC, WEEE	CE, EAC, cULus, WEEE	CE, cULus, EAC, WEEE	CE, cULus, EAC, WEEE
	Page 131	Page 131	Page 131	Page 131

PNP normally open			
normally open	**BES02AC** BES 516-217-E5-E-S27	**BES02AE** BES 516-217-E5-E-S5	
Dimension	Ø 30 x 70.5 mm	Ø 30 x 80 mm	
Style	M30x1.5	M30x1.5	
Installation	non-flush	non-flush	
Range	15 mm	15 mm	
Switching frequency	100 Hz	100 Hz	
Housing material	Brass, nickel plated	Brass, nickel plated	
Material sensing surface	PA 12	PA 12	
Connection	Connector, M12x1-Male	Connector, 7/8“-16 UN-Male	
Operating voltage Ub	20...250 VDC/20...250 VAC	20...250 VDC/20...250 VAC	
Ambient temperature	-25...70 °C	-25...70 °C	
IP rating	IP67	IP67	
Approval/Conformity	CE, cULus, EAC, WEEE	CE, cULus, EAC, WEEE	
Productview	Page 131	Page 131	

	BES02FN BES 515-362-S4-C	BES01JE BES 516-362-S4-C	BES00AZ BES M30MM-PSC30F-S04K	BES01JC BES 516-362-G-S4-H
	Ø 30 x 83 mm	Ø 30 x 83 mm	Ø 30 x 83 mm	Ø 30 x 83 mm
	M30x1.5	M30x1.5	M30x1.5	M30x1.5
	non-flush	non-flush	non-flush	non-flush
	15 mm	15 mm	30 mm	30 mm
	100 Hz	100 Hz	300 Hz	70 Hz
	Stainless steel	Brass, nickel plated	Brass, Nickel-free coated	Brass, nickel plated
	PA 12	PA 12	PBT	PA 12
	Connector, M12x1-Male, 4-pin	Connector, M12x1-Male, 4-pin	Connector, M12x1-Male, 4-pin	Connector, M12x1-Male, 4-pin
	10...30 VDC	10...30 VDC	10...30 VDC	10...55 VDC
	-25...70 °C	-25...70 °C	-25...70 °C	-25...70 °C
	IP68	IP68	IP67	IP68
	CE, cULus, EAC, WEEE	CE, cULus, EAC, WEEE	CE, cULus, EAC, WEEE	CE, EAC, WEEE
	Page 131	Page 131	Page 132	Page 131

PNP normally open	**BES02YJ** BES M30MG1-PSC40F-S04G	**BES02YM** BES M30MI1-PSC22B-S04G	
PNP normally closed		**BES02YL** BES M30MI1-POC22B-S04G	
Dimension	Ø 30 x 73.5 mm	Ø 30 x 73.5 mm	
Style	M30x1.5	M30x1.5	
Installation	non-flush	quasi-flush	
Range	40 mm	22 mm	
Switching frequency	100 Hz	200 Hz	
Housing material	Brass, Chrome-plated	Brass, Chrome-plated	
Material sensing surface	PBT	PBT	
Connection	Connector, M12x1-Male, 4-pin	Connector, M12x1-Male, 4-pin	
Operating voltage Ub	10...30 VDC	10...30 VDC	
Ambient temperature	-25...70 °C	-25...70 °C	
IP rating	IP54	IP67	
Approval/Conformity	CE, cULus, EAC, WEEE	cULus, CE, EAC, WEEE	
Productview	Page 132	Page 132	

		BES01FJ BES 516-347-M0-C-03	BES01FK BES 516-347-M0-C-05	BES01FM BES 516-347-M0-C-PU-05
	BES0341 BES 516-3009-SA2-M0-C-05			
	50 x 25 x 10 mm	50 x 25 x 10 mm	50 x 25 x 10 mm	50 x 25 x 10 mm
	block style	block style	block style	block style
	flush	flush	flush	flush
	2.5 mm	5 mm	5 mm	5 mm
	1000 Hz	500 Hz	500 Hz	500 Hz
	Aluminum	Aluminum, Die casting	Aluminum, Die casting	Aluminum
	PBT	PBT	PBT	PBT
	Cable, 5.00 m, PUR	Cable, 3.00 m, PVC	Cable, 5.00 m, PVC	Cable, 5.00 m, PUR
	10...30 VDC	10...30 VDC	10...30 VDC	10...30 VDC
	-25...70 °C	-25...70 °C	-25...70 °C	-25...70 °C
	IP67	IP67	IP67	IP67
	CE, EAC, WEEE	CE, EAC, WEEE	CE, EAC, WEEE	CE, EAC, WEEE
	Page 132	Page 132	Page 132	Page 132

PNP normally open			
PNP normally open/normally closed	**BES017H** BES 516-133-M0-C-PU-05	**BES032R** BES 516-133-SA3-C-PU-04	
Dimension	50 x 25 x 10 mm	50 x 25 x 10 mm	
Style	block style	block style	
Installation	flush	flush	
Range	5 mm	5.6 mm	
Switching frequency	500 Hz	500 Hz	
Housing material	Aluminum	Aluminum	
Material sensing surface	PBT	PBT	
Connection	Cable, 5.00 m, PUR	Cable, 4.00 m, PUR	
Operating voltage Ub	10...30 VDC	10...30 VDC	
Ambient temperature	-25...70 °C	-25...70 °C	
IP rating	IP67	IP67	
Approval/Conformity	CE, EAC, WEEE	CE, EAC, WEEE	
Productview	Page 132	Page 132	

	BES01FN BES 516-347-MO-C-S4-00,2	**BES01FT** BES 516-347-MO-C-S49-00,2		**BES01FR** BES 516-347-MO-C-S49
			BES0153 BES 516-133-MO-C-S4-00,2	
	50 x 25 x 10 mm	50 x 25 x 10 mm	50 x 25 x 10 mm	59 x 25 x 10 mm
	block style	block style	block style	block style
	flush	flush	flush	flush
	5 mm	5 mm	5 mm	5 mm
	500 Hz	500 Hz	500 Hz	500 Hz
	Aluminum	Aluminum	Aluminum	Aluminum
	PBT	PBT	PBT	PBT
	Cable with connector, M12x1-Male, 4-pin, 0.20 m, PUR	Cable with connector, M8x1-Male, 3-pin, 0.20 m, PUR	Cable with connector, M12x1-Male, 4-pin, 0.20 m, PUR	Connector, M8x1-Male, 3-pin
	10...30 VDC	10...30 VDC	10...30 VDC	10...30 VDC
	-25...70 °C	-25...70 °C	-25...70 °C	-25...70 °C
	IP67	IP67	IP67	IP65
	CE, EAC, WEEE	CE, EAC, WEEE	CE, EAC, WEEE	CE, EAC, WEEE
	Page 132	Page 132	Page 132	Page 132

PNP normally open			
NPN normally open			
normally open	**BES02CT** BES R05KB-USU20B-EV02	**BES02CU** BES R05KB-USU20B-EV03	
Dimension	40 x 12 x 26 mm	40 x 12 x 26 mm	
Style	40x12x26	40x12x26	
Installation	flush	flush	
Range	2 mm	2 mm	
Switching frequency	400 Hz	400 Hz	
Housing material	PA 12	PA 12	
Material sensing surface	PA 12	PA 12	
Connection	Cable, 2.00 m, PVC	Cable, 3.00 m, PVC	
Operating voltage Ub	20...250 VDC/20...250 VAC	20...250 VDC/20...250 VAC	
Ambient temperature	-25...70 °C	-25...70 °C	
IP rating	IP67	IP67	
Approval/Conformity	CE, EAC, WEEE	CE, EAC, WEEE	
Productview	Page 133	Page 133	

		BES01Z5 BES R05KB-PSC20B-EP05		**BES01ZA** BES R05KB-PSC40B-EV02
	BES01YZ BES R05KB-NSC20B-EP05			
			BES02CY BES R05KB-USU40B-EV02	
	40 x 12 x 26 mm	40 x 12 x 26 mm	40 x 12 x 26 mm	40 x 12 x 26 mm
	40x12x26	40x12x26	40x12x26	40x12x26
	flush	flush	flush	flush
	2 mm	2 mm	4 mm	4 mm
	2000 Hz	400 Hz	400 Hz	400 Hz
	PA 12	PA 12	PA 12	PA 12
	PA 12	PA 12	PA 12	PA 12
	Cable, 5.00 m, PUR	Cable, 5.00 m, PUR	Cable, 2.00 m, PVC	Cable, 2.00 m, PVC
	10...30 VDC	10...30 VDC	20...250 VDC/20...250 VAC	10...30 VDC
	-25...70 °C	-25...70 °C	-25...70 °C	-25...70 °C
	IP67	IP67	IP67	IP67
	CE, cULus, EAC, WEEE	CE, cULus, EAC, WEEE	CE, EAC, WEEE	CE, cULus, EAC, WEEE
	Page 133	Page 133	Page 133	Page 133

PNP normally open	**BES01ZC** BES R05KB-PSC40B-EV03	**BES01Z8** BES R05KB-PSC40B-EP00,3-GS04	
PNP normally closed			
NPN normally open			
Dimension	40 x 12 x 26 mm	40 x 12 x 26 mm	
Style	40x12x26	40x12x26	
Installation	flush	flush	
Range	4 mm	4 mm	
Switching frequency	400 Hz	400 Hz	
Housing material	PA 12	PA 12	
Material sensing surface	PA 12	PA 12	
Connection	Cable, 3.00 m, PVC	Cable with connector, M12x1-Male, 4-pin, 0.30 m, PUR	
Operating voltage Ub	10...30 VDC	10...30 VDC	
Ambient temperature	-25...70 °C	-25...70 °C	
IP rating	IP67	IP67	
Approval/Conformity	CE, cULus, EAC, WEEE	CE, cULus, EAC, WEEE	
Productview	Page 133	Page 133	

	BES01Z7 BES R05KB-PSC20B-S49A	**BES01ZE** BES R05KB-PSC40B-S49A	**BES01N5** BES 517-398-NO-C-03	**BES01N6** BES 517-398-NO-C-05
	BES048A BES R05KB-POC20B-S49A	**BES01Z2** BES R05KB-POC40B-S49A		
			BES01NH BES 517-399-NO-C-03	
	40 x 12 x 26 mm	40 x 12 x 26 mm	30 x 10.5 x 16.5 mm	30 x 10.5 x 16.5 mm
	40x12x26	40x12x26	block style	block style
	flush	flush	flush	flush
	2 mm	4 mm	2 mm	2 mm
	400 Hz	400 Hz	2500 Hz	2500 Hz
	PA 12	PA 12	PBT, GF20	PBT, GF20
	PA 12	PA 12	PBT, GF20	PBT, GF20
	Connector, M8x1-Male, 3-pin	Connector, M8x1-Male, 3-pin	Cable, 3.00 m, PVC	Cable, 5.00 m, PVC
	10...30 VDC	10...30 VDC	10...30 VDC	10...30 VDC
	-25...70 °C	-25...70 °C	-25...70 °C	-25...70 °C
	IP67	IP67	IP65	IP65
	CE, cULus, EAC, WEEE	CE, cULus, EAC, WEEE	CE, cULus, EAC, WEEE	CE, cULus, EAC, WEEE
	Page 133	Page 133	Page 133	Page 133

PNP normally open	**BES01N8** BES 517-398-NO-C-PU-03	**BES01N9** BES 517-398-NO-C-PU-05	
PNP normally closed			
Dimension	30 x 10.5 x 16.5 mm	30 x 10.5 x 16.5 mm	
Style	block style	block style	
Installation	flush	flush	
Range	2 mm	2 mm	
Switching frequency	2500 Hz	2500 Hz	
Housing material	PBT, GF20	PBT, GF20	
Material sensing surface	PBT, GF20	PBT, GF20	
Connection	Cable, 3.00 m, PUR	Cable, 5.00 m, PUR	
Operating voltage Ub	10...30 VDC	10...30 VDC	
Ambient temperature	-25...70 °C	-25...70 °C	
IP rating	IP65	IP65	
Approval/Conformity	CE, EAC, WEEE	CE, EAC, WEEE	
Productview	Page 133	Page 133	

		BES01NA BES 517-398-N0-C-S49-00,2	**BES01N1** BES 517-398-N1-C	**BES01N2** BES 517-398-N2-C
	BES01MM BES 517-351-N0-C-03	**BES01MT** BES 517-351-N0-C-S49-00,2		
	30 x 10.5 x 16.5 mm	30 x 10.5 x 16.5 mm	30 x 10.5 x 16.5 mm	30 x 10.5 x 16.5 mm
	block style	block style	block style	block style
	flush	flush	flush	flush
	2 mm	2 mm	2 mm	2 mm
	2500 Hz	2500 Hz	2500 Hz	2500 Hz
	PBT, GF20	PBT, GF20	PBT, GF20	PBT, GF20
	PBT, GF20	PBT, GF20	PBT, GF20	PBT, GF20
	Cable, 3.00 m, PVC	Cable with connector, M8x1-Male, 3-pin, 0.20 m, PUR	Connector, DIN 46244	Connector, DIN 46244
	10...30 VDC	10...30 VDC	10...30 VDC	10...30 VDC
	-25...70 °C	-25...70 °C	-25...70 °C	-25...70 °C
	IP65	IP65	IP00	IP00
	CE, cULus, EAC, WEEE	CE, cULus, EAC, WEEE	CE, cULus, EAC, WEEE	CE, EAC, WEEE
	Page 133	Page 134	Page 134	Page 134

PNP normally open	**BES033J** BES 516-300-S279		
PNP normally open/normally closed			
NPN normally open	**BES033H** BES 516-300-S255		
NPN normally open/normally closed		**BES01W0** BES R01ZC-NAC70B-BP05	
Dimension	30 x 20 x 10 mm	32 x 20 x 8 mm	
Style	block style	32x20x8	
Installation	flush	flush	
Range	2 mm	7 mm	
Switching frequency	1500 Hz	150 Hz	
Housing material	Aluminum	Zinc, Die casting	
Material sensing surface	PBT	PA 12	
Connection	Cable, 5.00 m, PVC	Cable, 5.00 m, PUR	
Operating voltage Ub	10...30 VDC	10...30 VDC	
Ambient temperature	-25...70 °C	-25...70 °C	
IP rating	IP65	IP67	
Approval/Conformity	CE, EAC, WEEE	CE, cULus, EAC, WEEE	
Productview	Page 134	Page 134	

		BES01WE BES R01ZC-PSC70B-BP00.2-GS49	**BES01WF** BES R01ZC-PSC70B-BP00.3-GS49	**BES048Z** BES R01ZC-PSC70B-BZ00,2-GS04-110
	BES01W4 BES R01ZC-PAC70B-BP03			
	32 x 20 x 8 mm	32 x 20 x 8 mm	32 x 20 x 8 mm	32 x 20 x 8 mm
	32x20x8	32x20x8	32x20x8	32x20x8
	flush	flush	flush	flush
	7 mm	7 mm	7 mm	7 mm
	150 Hz	150 Hz	150 Hz	150 Hz
	Zinc, Die casting	Zinc, Die casting	Zinc, Die casting	Zinc, Die casting
	PA 12	PA 12	PA 12	ceramic coated
	Cable, 3.00 m, PUR	Cable with connector, M8x1-Male, 3-pin, 0.20 m, PUR	Cable with connector, M8x1-Male, 3-pin, 0.30 m, PUR	Cable with connector, M12x1-Male, 4-pin, 0.20 m, TPU
	10...30 VDC	10...30 VDC	10...30 VDC	10...30 VDC
	-25...70 °C	-25...70 °C	-25...70 °C	-25...70 °C
	IP67	IP67	IP67	IP67
	CE, cULus, EAC, WEEE	CE, cULus, EAC, WEEE	CE, cULus, EAC, WEEE	CE, cULus, EAC, WEEE
	Page 134	Page 134	Page 134	Page 134

PNP normally open			
PNP normally open/normally closed	**BES01W2** BES R01ZC-PAC70B-BP00.2-GS04	**BES0314** BES R01ZC-PAC70B-BP00.2-GS04-107	
Polarized normally open			
Dimension	32 x 20 x 8 mm	32 x 20 x 8 mm	
Style	32x20x8	32x20x8	
Installation	flush	flush	
Range	7 mm	7 mm	
Switching frequency	150 Hz	150 Hz	
Housing material	Zinc, Die casting	Zinc, Die casting	
Material sensing surface	PA 12	ceramic coated	
Connection	Cable with connector, M12x1-Male, 4-pin, 0.20 m, PUR	Cable with connector, M12x1-Male, 4-pin, 0.20 m, PUR	
Operating voltage Ub	10...30 VDC	10...30 VDC	
Ambient temperature	-25...70 °C	-25...70 °C	
IP rating	IP67	IP67	
Approval/Conformity	CE, cULus, EAC, WEEE	CE, cULus, EAC, WEEE	
Productview	Page 134	Page 135	

				BES022Z BES 517-3036-I02-C-S4
	BES01W3 BES R01ZC-PAC70B-BP00.5-GS04			
		BES030E BES Z03K-GSS10B-EP00,15-GS04-006	**BES030F** BES Z03K-GSS10B-EP00,8-GS04-006	
	32 x 20 x 8 mm	26 x 26 x 43 mm	26 x 26 x 43 mm	26 x 26 x 68.5 mm
	32x20x8	26x26	26x26	26x26
	flush	flush	flush	flush
	7 mm	10 mm	10 mm	10 mm
	150 Hz	250 Hz	250 Hz	500 Hz
	Zinc, Die casting	PA	PA	PA 12
	PA 12	PA	PA	PA 12
	Cable with connector, M12x1-Male, 4-pin, 0.50 m, PUR	Cable with connector, M12x1-Male, 4-pin, 0.15 m, PUR	Cable with connector, M12x1-Male, 4-pin, 0.80 m, PUR	Connector, M12x1-Male, 4-pin
	10...30 VDC	10...36 VDC	10...36 VDC	10...30 VDC
	-25...70 °C	-25...70 °C	-25...70 °C	-25...70 °C
	IP67	IP67	IP67	IP67
	CE, cULus, EAC, WEEE	CE, EAC, WEEE	CE, EAC, WEEE	CE, EAC, WEEE
	Page 134	Page 135	Page 135	Page 135

Do you need more details? Our Product Finder at www.balluff.com provides you with product-specific information, including technical drawings, data sheets, user guides and more for each individual product. All items are available for download.

PNP normally open		BES052M BES Q40KFA-PSY20B-DV02	
PNP normally open/normally closed	BES02TN BES IKU-031.28-S4		
Dimension	300 x 35 x 47 mm	40 x 40 x 54.5 mm	
Style	block style	40x40	
Installation	non-flush	flush	
Range	30 mm	20 mm	
Switching frequency	50 Hz	40 Hz ±15 Hz	
Housing material	Plastic	PBT	
Material sensing surface	Plastic	PBT	
Connection	Connector, M12x1-Male, 4-pin	Cable, 2.00 m, PVC	
Operating voltage Ub	10...30 VDC	10...30 VDC	
Ambient temperature	-25...70 °C	-25...70 °C	
IP rating	IP65	IP67	
Approval/Conformity	CE, EAC, WEEE	CE, cULus, EAC, WEEE	
Productview	Page 135	Page 135	

	BES0555 BES Q40KFC-PSY20B-DV02			
				BES0201 BES 517-132-M3-H
	40 x 40 x 54.5 mm	120 x 40 x 40 mm	120 x 40 x 40 mm	120 x 40 x 40 mm
	40x40	40x40	40x40	40x40
	flush	flush	flush	flush
	20 mm	15 mm	15 mm	15 mm
	40 Hz ±15 Hz	100 Hz	100 Hz	100 Hz
	PBT	PBT	Aluminum, Die casting PBT	PBT
	PBT	PBT	PBT	PBT
	Cable, 2.00 m, PVC	Screw terminals	Screw terminals	Screw terminals
	10...30 VDC	20...250 VDC/20...250 VAC	20...250 VDC/20...250 VAC	10...55 VDC
	-25...70 °C	-25...70 °C	-25...70 °C	-25...70 °C
	IP67	IP67	IP67	IP67
	CE, cULus, EAC, WEEE	CE, cULus, EAC, WEEE	CE, cULus, EAC, WEEE	CE, EAC, WEEE
	Page 135	Page 135	Page 135	Page 136

PNP normally open			
PNP normally open/normally closed	**BES0209** BES 517-132-M6-H	**BES020A** BES 517-132-M6-H-S4	
Dimension	120 x 40 x 40 mm	132.5 x 40 x 40 mm	
Style	40x40	40x40	
Installation	flush	flush	
Range	20 mm	20 mm	
Switching frequency	50 Hz	50 Hz	
Housing material	PBT	PBT	
Material sensing surface	PBT	PBT	
Connection	Screw terminals	Connector, M12x1-Male, 4-pin	
Operating voltage Ub	10...55 VDC	10...55 VDC	
Ambient temperature	-25...70 °C	-25...70 °C	
IP rating	IP67	IP67	
Approval/Conformity	CE, EAC, WEEE	CE, EAC, WEEE	
Productview	Page 136	Page 136	

	BES021W BES Q40KFU-PSC20B-S04G			
		BES0217 BES Q40KFU-PAC20B-S04G	**BES03PN** BES Q40KHU-PAC20B-S04G	
	40 x 40 x 62 mm	40 x 40 x 62 mm	40 x 40 x 65 mm	120 x 40 x 40 mm
	40x40	40x40	40x40	40x40
	flush	flush	flush	non-flush
	20 mm	20 mm	20 mm	20 mm
	50 Hz	50 Hz	50 Hz	100 Hz
	PBT	PBT	Zinc, Die casting PBT	PBT
	PBT	PBT	PBT	PBT
	Connector, M12x1-Male, 4-pin	Connector, M12x1-Male, 4-pin	Connector, M12x1-Male, 4-pin	Screw terminals
	10...30 VDC	10...30 VDC	10...30 VDC	20...250 VDC/20...250 VAC
	-25...70 °C	-25...70 °C	-25...70 °C	-25...70 °C
	IP67	IP67	IP67	IP67
	CE, cULus, EAC, WEEE	CE, cULus, EAC, WEEE	CE, cULus, EAC, WEEE	CE, cULus, EAC, WEEE
	Page 136	Page 136	Page 136	Page 135

PNP normally open			
PNP normally open/normally closed			
normally open/normally closed	**BES0244** BES 517-223-U4-E	**BES023Y** BES 517-223-M5-E	
Dimension	120 x 40 x 40 mm	120 x 40 x 40 mm	
Style	40x40	40x40	
Installation	non-flush	non-flush	
Range	20 mm	30 mm	
Switching frequency	100 Hz	100 Hz	
Housing material	Aluminum, Die casting PBT	PBT	
Material sensing surface	PBT	PBT	
Connection	Screw terminals	Screw terminals	
Operating voltage Ub	20...250 VDC/20...250 VAC	20...250 VDC/20...250 VAC	
Ambient temperature	-25...70 °C	-25...70 °C	
IP rating	IP67	IP67	
Approval/Conformity	CE, cULus, EAC, WEEE	CE, cULus, EAC, WEEE	
Productview	Page 135	Page 135	

				BES0236 BES 517-385-V-C-S4
		BES0206 BES 517-132-M5-H	**BES020C** BES 517-132-M7-H	
	BES0247 BES 517-223-U5-E			
	120 x 40 x 40 mm	120 x 40 x 40 mm	120 x 40 x 40 mm	132.5 x 40 x 40 mm
	40x40	40x40	40x40	40x40
	non-flush	non-flush	non-flush	non-flush
	30 mm	30 mm	40 mm	25 mm
	100 Hz	60 Hz	50 Hz	50 Hz
	Aluminum, Die casting PBT	PBT	PBT	PBT
	PBT	PBT	PBT	PBT
	Screw terminals	Screw terminals	Screw terminals	Connector, M12x1-Male, 4-pin
	20...250 VDC/20...250 VAC	10...55 VDC	10...55 VDC	10...30 VDC
	-25...70 °C	-25...70 °C	-25...70 °C	-25...70 °C
	IP67	IP67	IP67	IP67
	CE, cULus, EAC, WEEE	CE, EAC, WEEE	CE, EAC, WEEE	CE, EAC, WEEE
	Page 135	Page 136	Page 136	Page 136

PNP normally open	**BES021Z** BES Q40KFU-PSC30F-S04G		
PNP normally open/normally closed		**BES021E** BES Q40KFU-PAC30F-S04G	
Dimension	40 x 40 x 62 mm	40 x 40 x 62 mm	
Style	40x40	40x40	
Installation	non-flush	non-flush	
Range	30 mm	30 mm	
Switching frequency	50 Hz	50 Hz	
Housing material	PBT	PBT	
Material sensing surface	PBT	PBT	
Connection	Connector, M12x1-Male, 4-pin	Connector, M12x1-Male, 4-pin	
Operating voltage Ub	10...30 VDC	10...30 VDC	
Ambient temperature	-25...70 °C	-25...70 °C	
IP rating	IP67	IP67	
Approval/Conformity	CE, cULus, EAC, WEEE	CE, cULus, EAC, WEEE	
Productview	Page 136	Page 136	

		BES0308 BES Q40KFU-PSC40F-S04G-012		
	BES020E BES 517-132-M7-H-S4		**BES030C** BES Q80KA-PAC50B-S04Q-U	
	132.5 x 40 x 40 mm	40 x 40 x 66 mm	112 x 80 x 40 mm	
	40x40	40x40	80x80	
	non-flush	non-flush	flush	
	40 mm	40 mm	50 mm	
	50 Hz	60 Hz	70 Hz	
	PBT	PA	PPE	
	PBT	PA	PPE	
	Connector, M12x1-Male, 4-pin	Connector, M12x1-Male, 4-pin	Connector, M12x1-Male, 4-pin	
	10...55 VDC	10...36 VDC	10...36 VDC	
	-25...70 °C	-25...70 °C	-25...70 °C	
	IP67	IP67	IP67	
	CE, EAC, WEEE	CE, EAC, cULus, WEEE	CE, EAC, cULus, WEEE	
	Page 136	Page 136	Page 136	

PNP normally open/normally closed	**BES023P** BES 517-139-M4-H		
normally open/normally closed		**BES022R** BES 517-460-U5-L-D	
Dimension	80 x 80 x 40 mm	80 x 80 x 40 mm	
Style	80x80	80x80	
Installation	flush	non-flush	
Range	40 mm	50 mm	
Switching frequency	50 Hz	10 Hz	
Housing material	PBT	PBT	
Material sensing surface	PBT	PBT	
Connection	Screw terminals	Screw terminals	
Operating voltage Ub	10...55 VDC	20...250 VAC	
Ambient temperature	-15...70 °C	-25...70 °C	
IP rating	IP67	IP67	
Approval/Conformity	CE, EAC, WEEE	CE, EAC, WEEE	
Productview	Page 136	Page 137	

	BES023R BES 517-139-M5-H	BES024F BES 517-224-M5-E	BES023W BES 517-139-U5-H-S4	
	80 x 80 x 40 mm	40 x 80 x 80 mm	80 x 80 x 40 mm	
	80x80	80x80	80x80	
	non-flush	non-flush	non-flush	
	50 mm	50 mm	50 mm	
	100 Hz	10 Hz	100 Hz	
	PBT	PBT	PBT	
	PBT	PBT	PBT	
	Screw terminals	Screw terminals	Connector, M12x1-Male, 4-pin	
	10...55 VDC	20...250 VAC	10...55 VDC	
	-25...70 °C	-25...70 °C	-25...70 °C	
	IP67	IP67	IP67	
	CE, EAC, WEEE	CE, cULus, EAC, WEEE	CE, cULus, EAC, WEEE	
	Page 136	Page 137	Page 137	

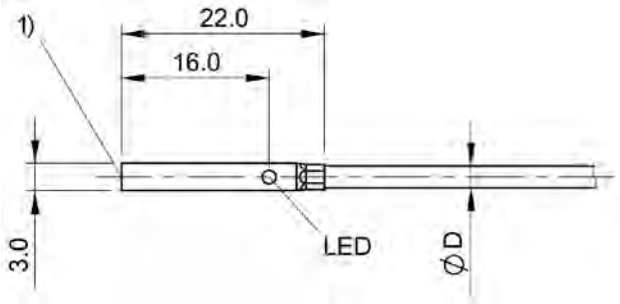

1) Sensing surface

BES03Z6

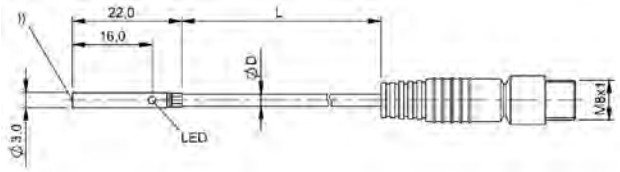

1) Sensing surface

BES0409

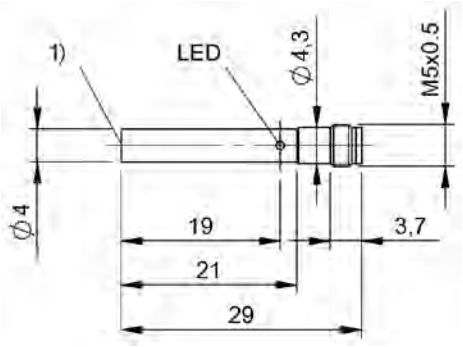

1) Sensing surface

BES0122, BES0120

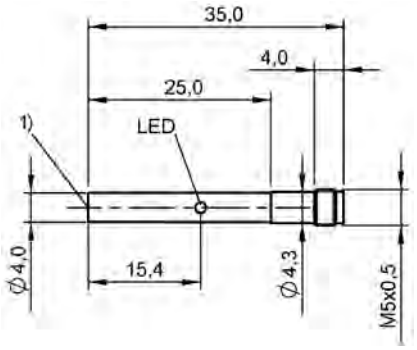

1) Sensing surface

BES012F

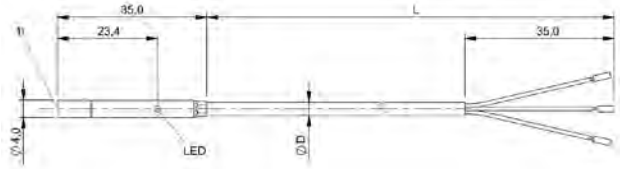

1) Sensing surface

BES012H, BES012J

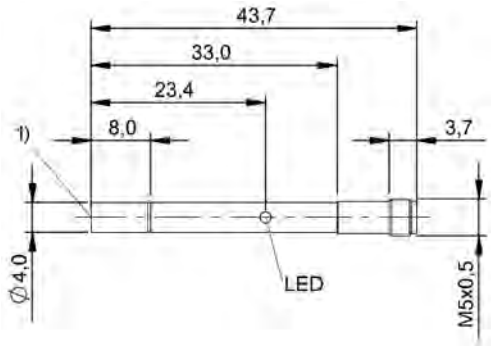

1) Sensing surface

BES012K

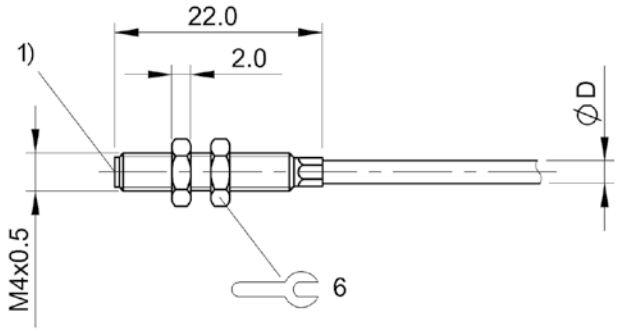

1) Sensing surface

BES01P0

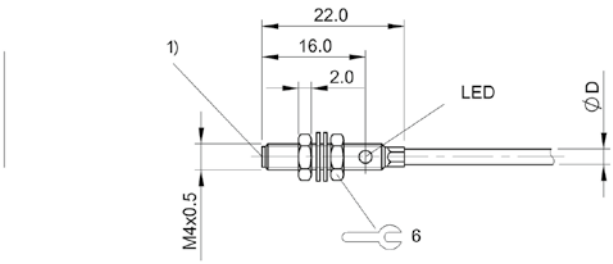

BES03ZJ, BES03Z8

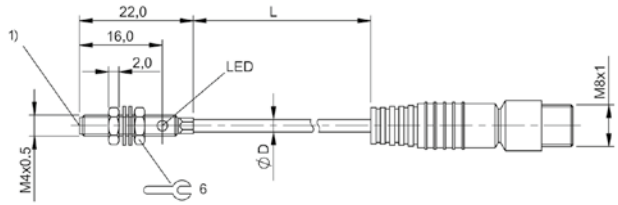

1) Sensing surface

BES040R

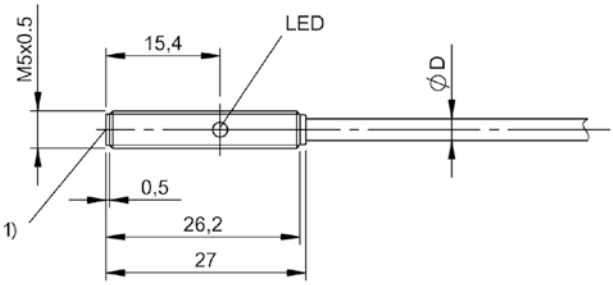

1) Sensing surface

BES051J, BES051L

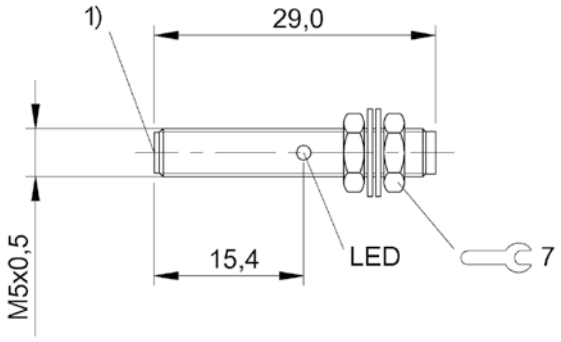

1) Sensing surface

BES012W, BES012Z

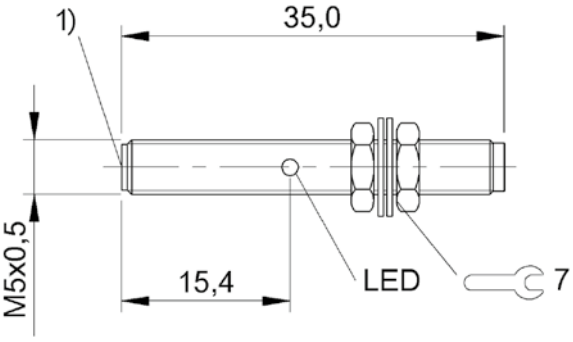

1) Sensing surface

BES0130, BES013A, BES0137

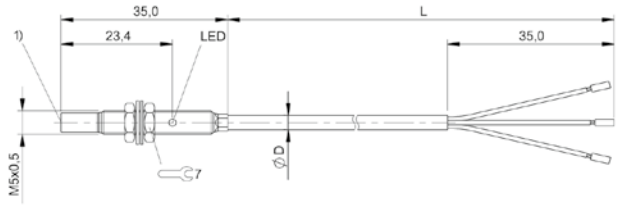

1) Sensing surface

BES013E, BES013F

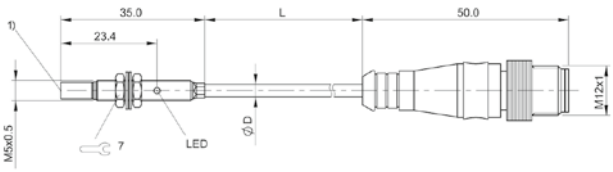

1) Sensing surface

BES013C

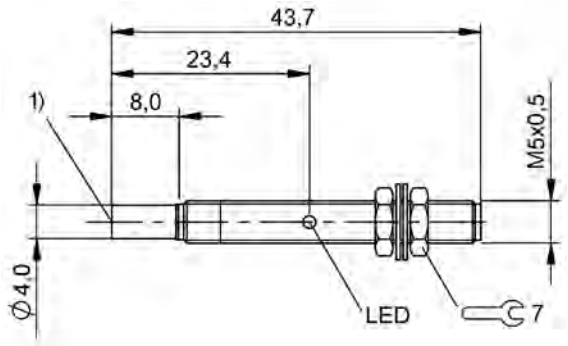

1) Sensing surface

BES013H, BES0139

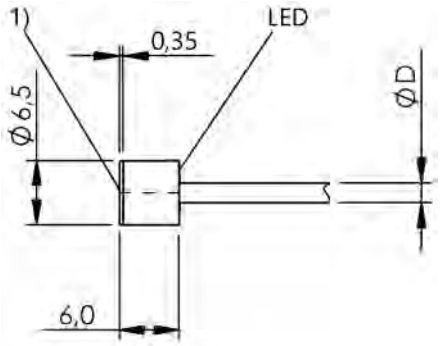

1) Sensing surface

BES0256, BES0251, BES0258

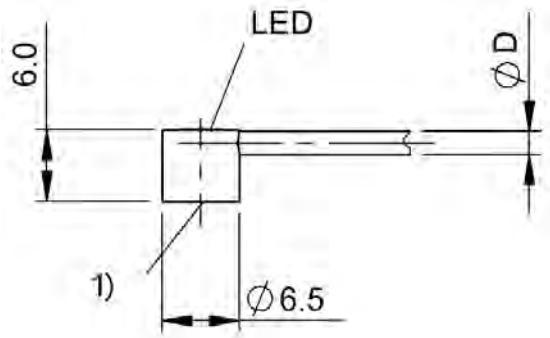

1) Sensing surface

BES025U, BES03ZA

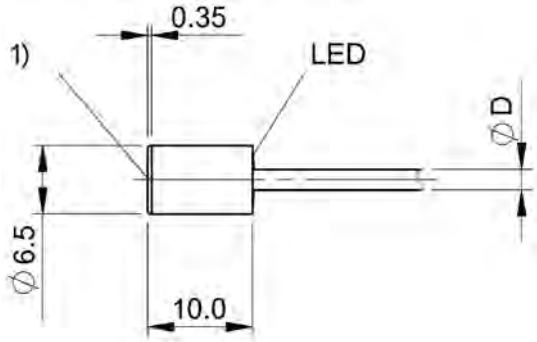

1) Sensing surface

BES025L, BES025M, BES025H

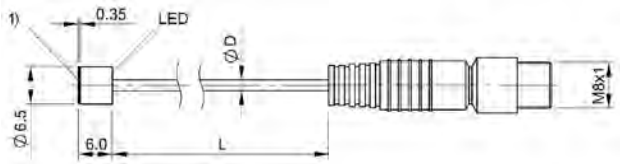

1) Sensing surface

BES0254, BES051H, BES0257

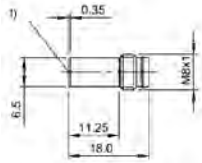

1) Sensing surface

BES025N

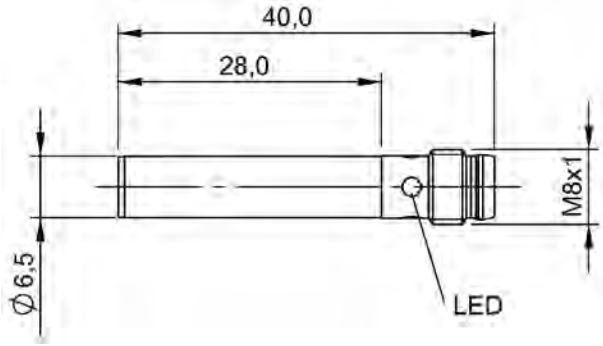

BES03R9

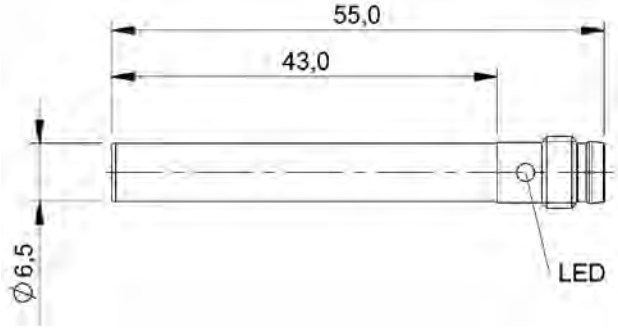

BES03P4

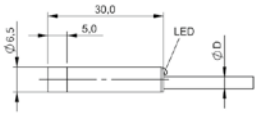

BES0008, BES000E

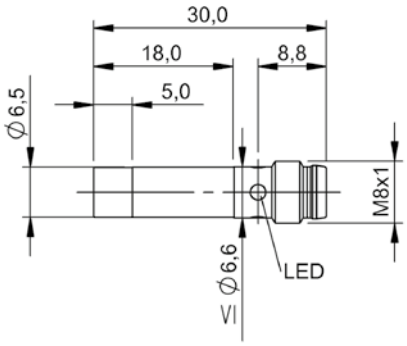

BES0005

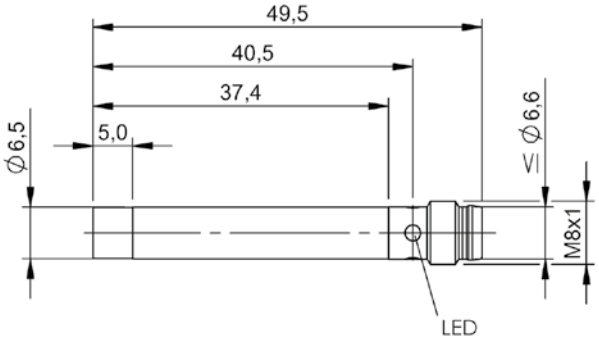

BES01NP

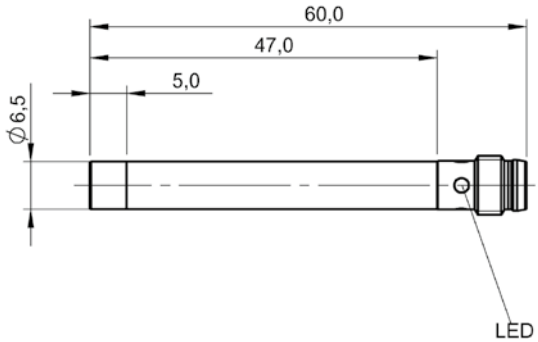

BES03P5

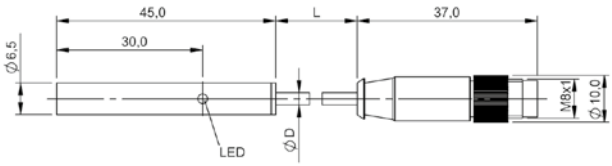

BES03EJ

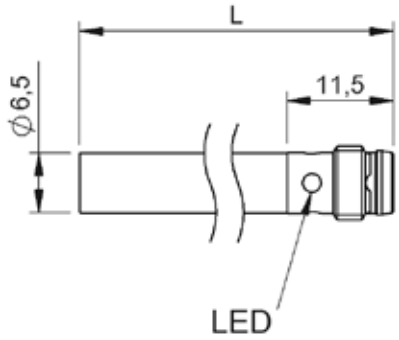

BES038Y

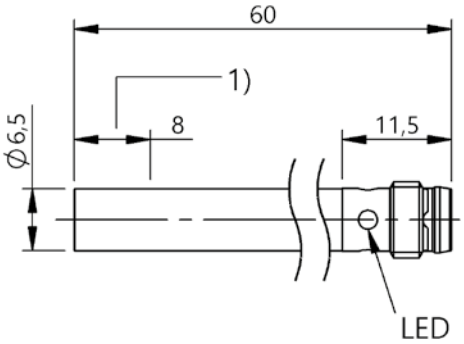

BES05WE

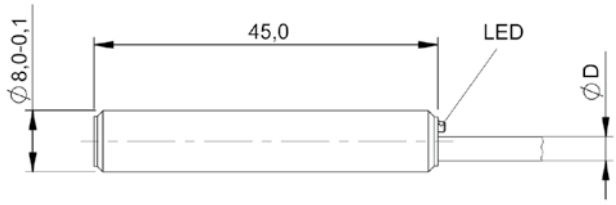

BES012R, BES01NY, BES012T

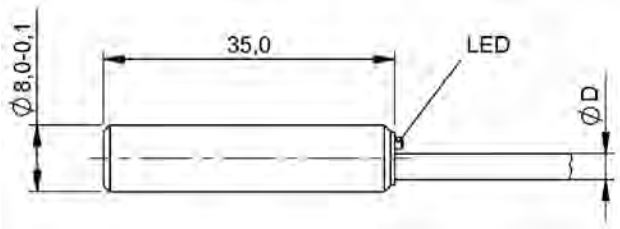

BES012L

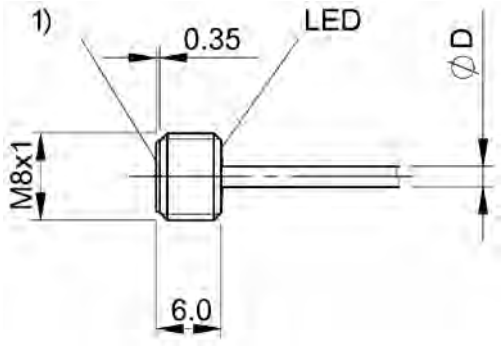

1) Sensing surface

BES026M

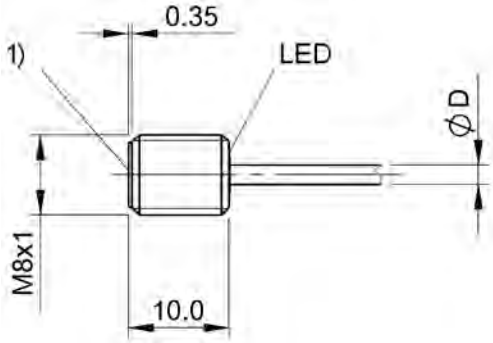

1) Sensing surface

BES0275

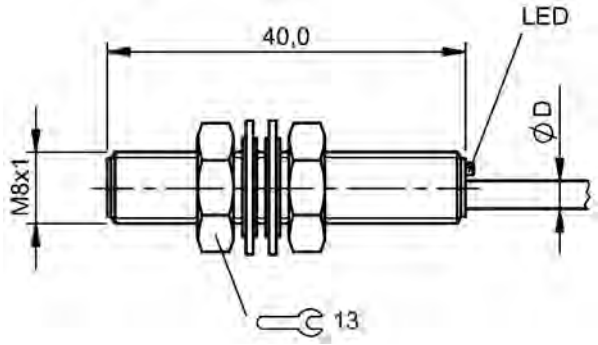

BES00CN, BES014K, BES00CR, BES00CW

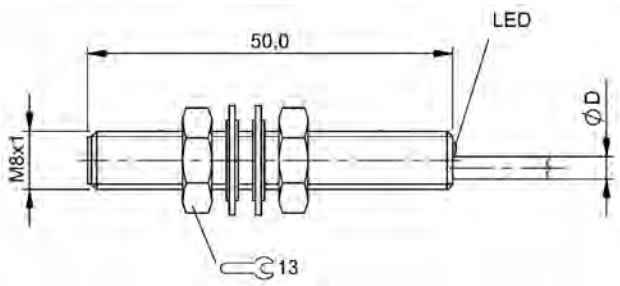

BES002H, BES0034, BES0036, BES0031, BES0032, BES0037, BES002P, BES003F, BES003J, BES03TL, BES003K, BES003M, BES03TH

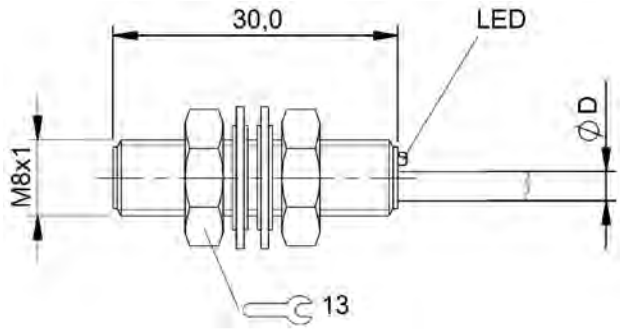

BES0389

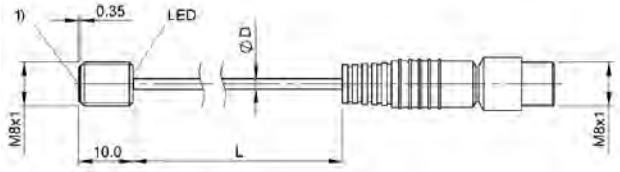

1) Sensing surface

BES0276

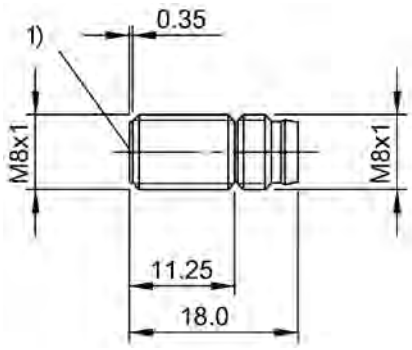

1) Sensing surface

BES0277, BES0270, BES0278

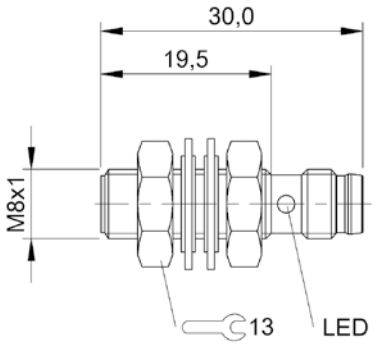

BES013J, BES013N, BES013K, BES013P, BES013L

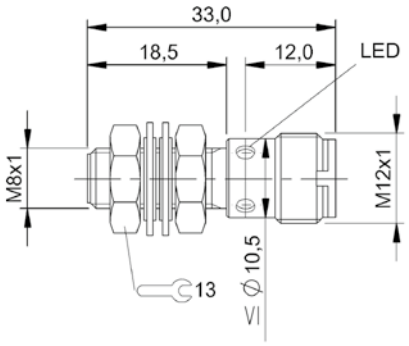

BES013M

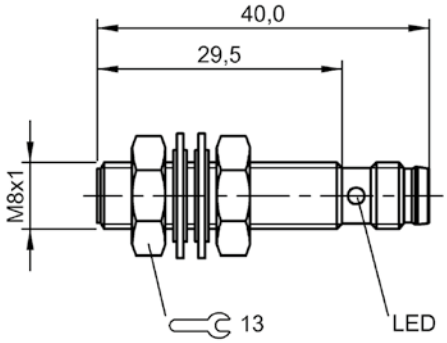

BES0147, BES0143, BES014A, BES0145

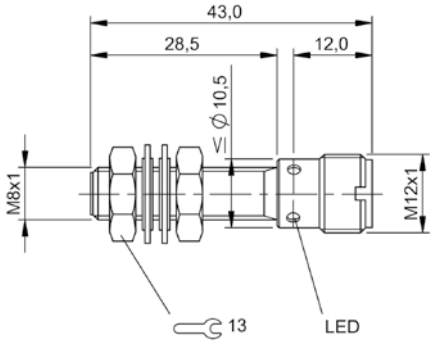

BES013Y, BES0146, BES0142, BES0149

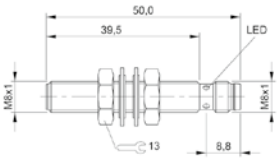

BES01P7

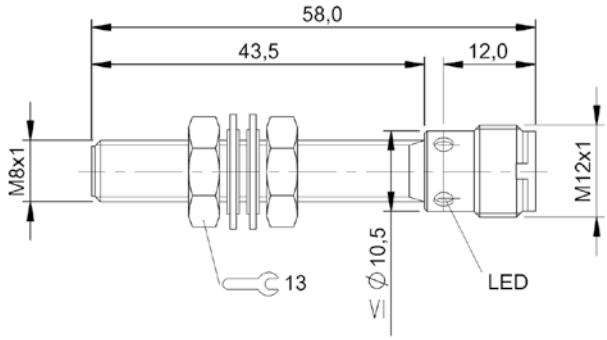

BES01PC, BES01PE, BES01PH

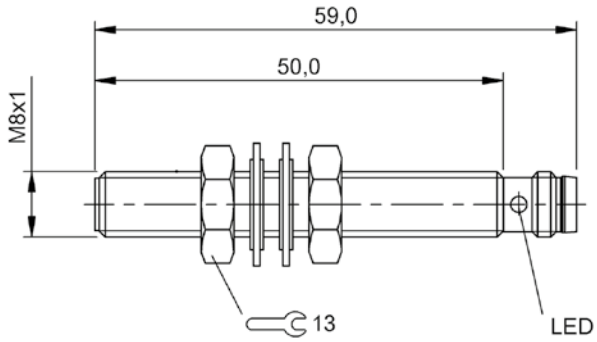

BES002K, BES03P6, BES003C, BES002U, BES0033, BES003P

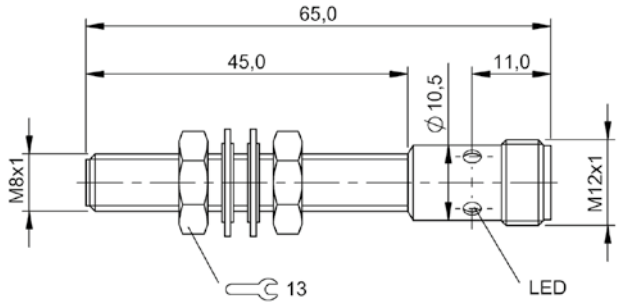

BES0024, BES0026, BES0027, BES0025, BES0028, BES03T5

Do you need more details? Our Product Finder at www.balluff.com provides you with product-specific information, including technical drawings, data sheets, user guides and more for each individual product. All items are available for download.

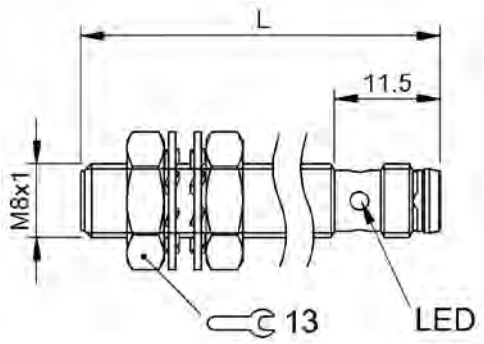

BES0427

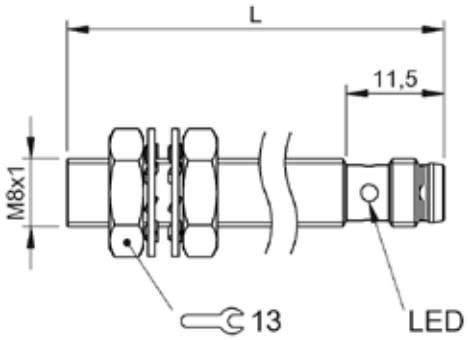

BES054N

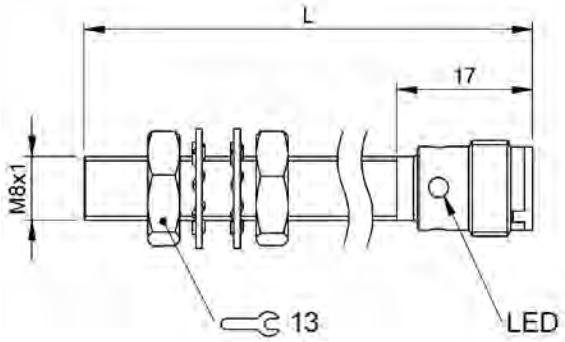

BES02W7, BES02W9

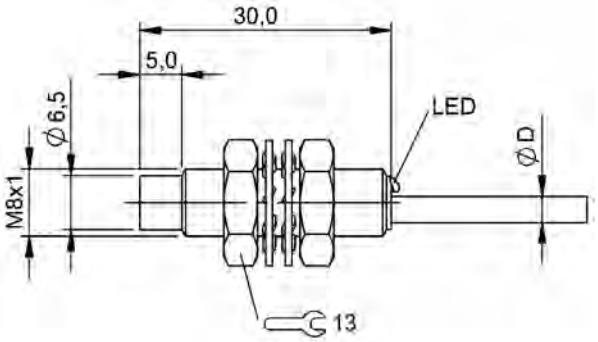

BES000T, BES000Y

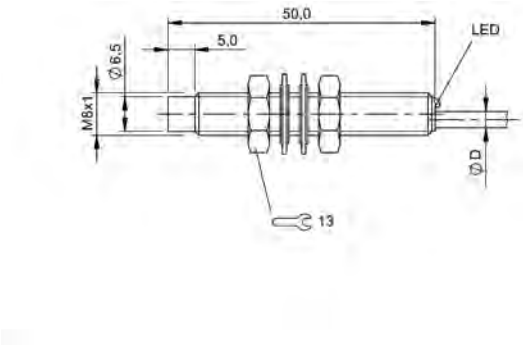

BES0013, BES0016, BES0014

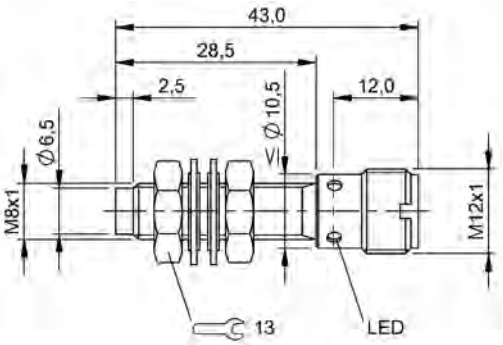

BES01P3

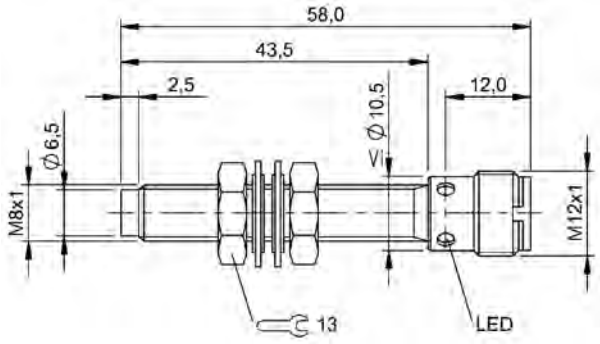

BES01P5, BES01P8, BES01P6

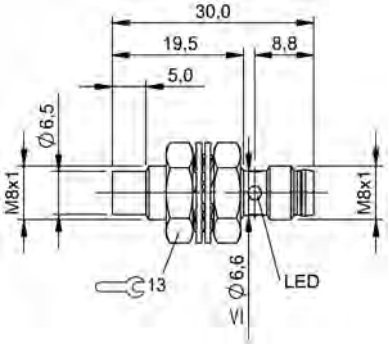

BES000M, BES000L

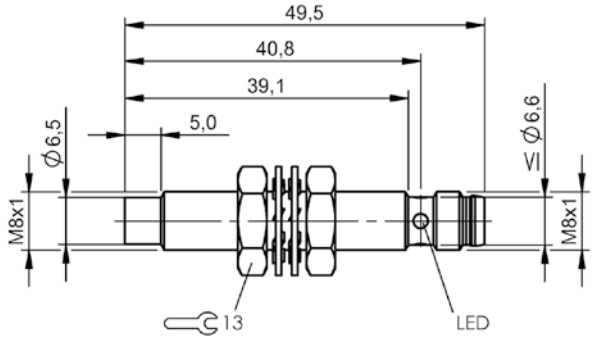

BES014M

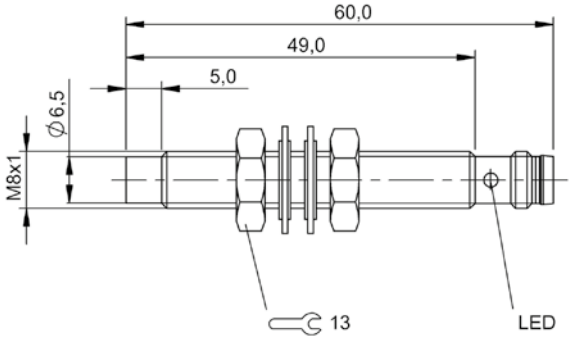

BES001C, BES001J, BES001F

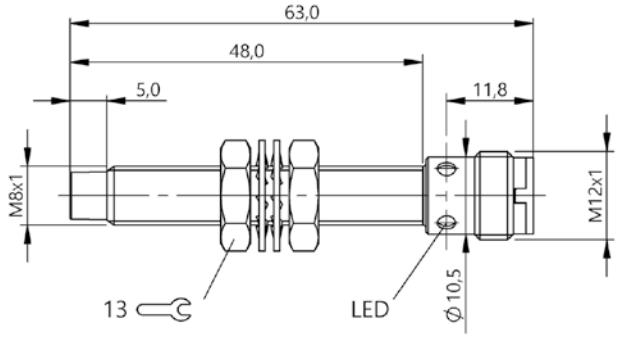

BES001A, BES01P9, BES001H, BES001E

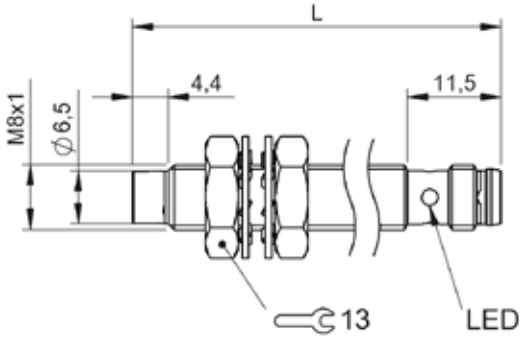

BES054Z, BES0550

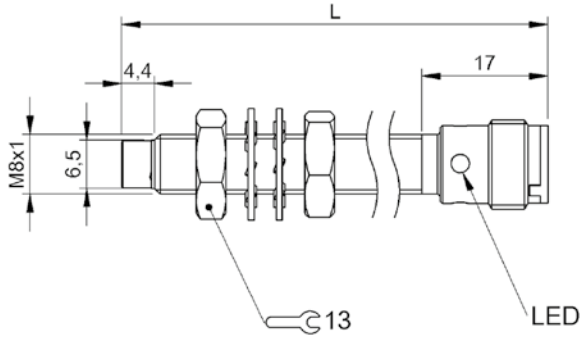

BES058J

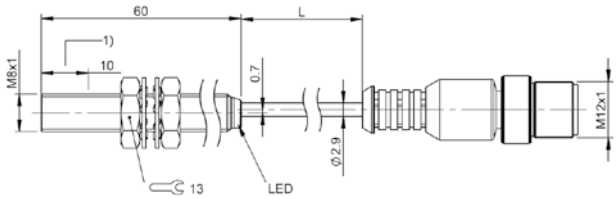

BES05UA, BES05U9

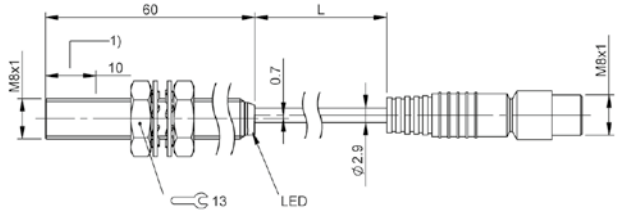

BES05U8

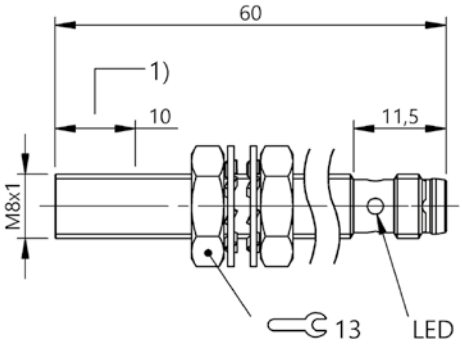

BES01ZT, BES01ZW

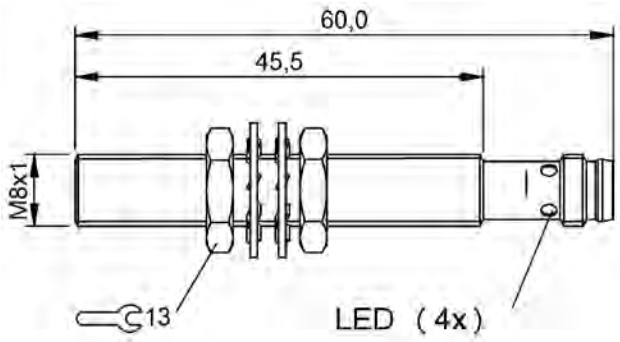

BES02W6

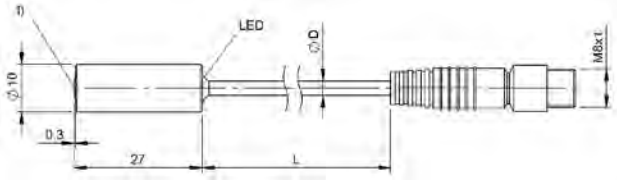

1) Sensing surface

BES04TU

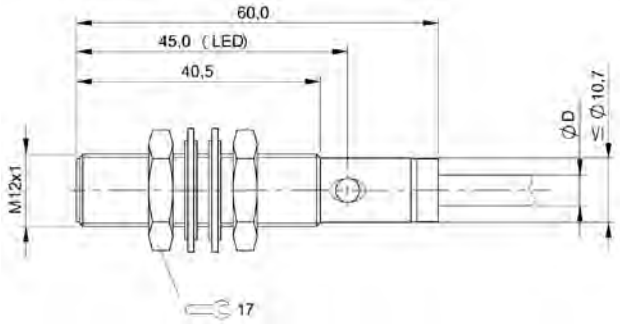

BES02C9, BES027M, BES027N

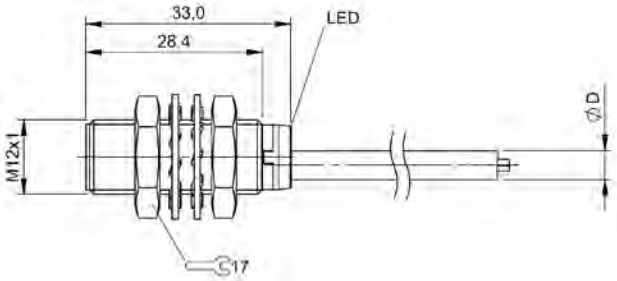

1) Sensing surface

BES00E5

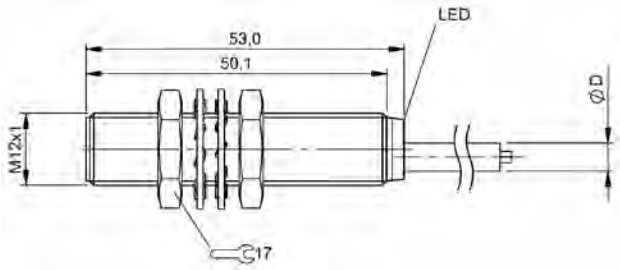

BES0057, BES0058, BES0062, BES0064, BES0001, BES0065

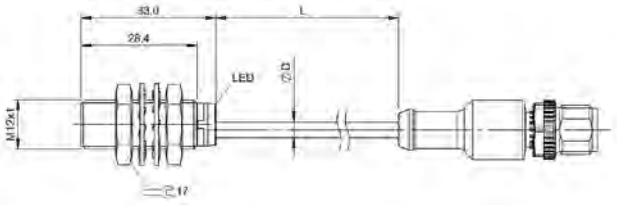

BES00PW

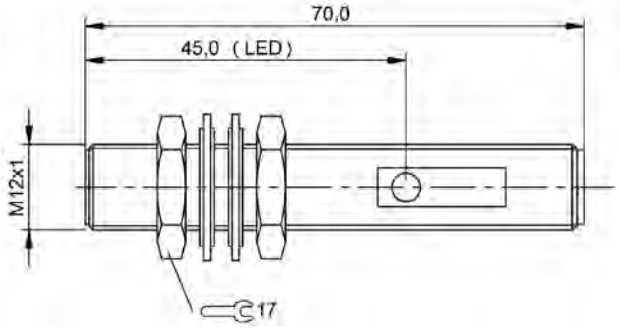

BES032M

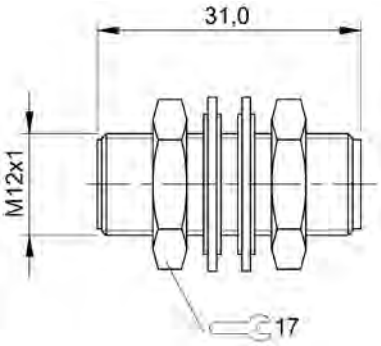

BES035E

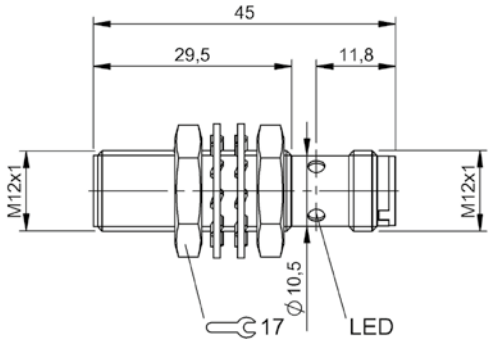

BES00PK, BES00YT, BES00EF, BES00PY, BES00Z0, BES02WM

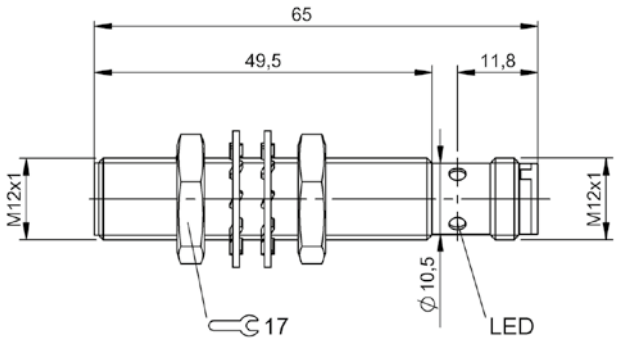

BES0060, BES04FK, BES0059, BES005N, BES0068

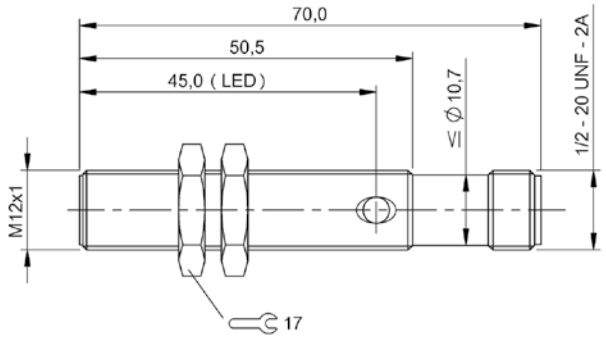

BES02FP

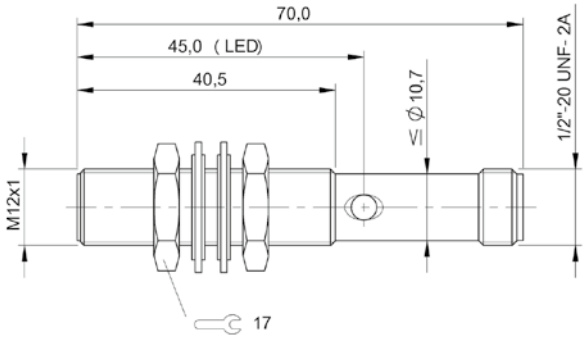

BES027U

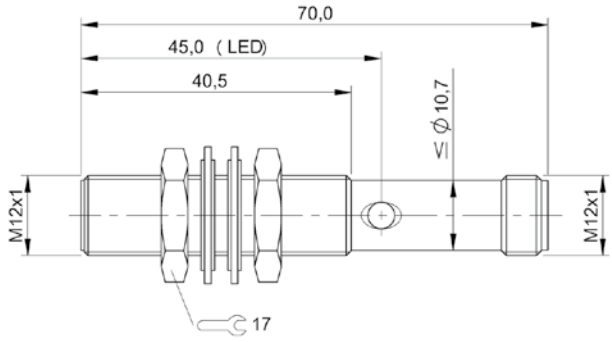

BES027W

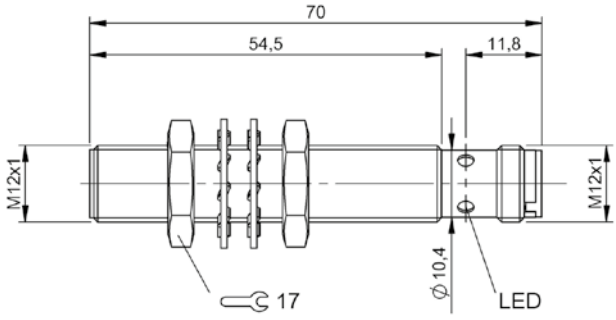

BES01C8, BES0161, BES01K6, BES01C7

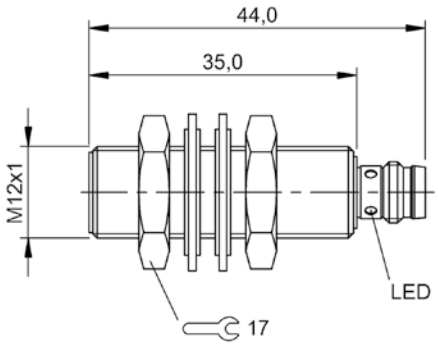

BES00PZ

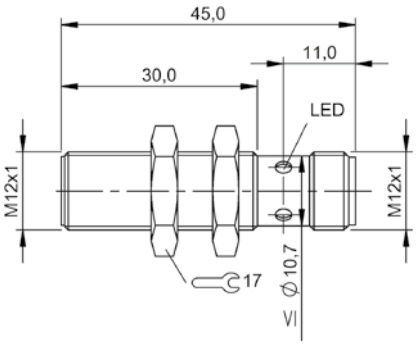

BES014W

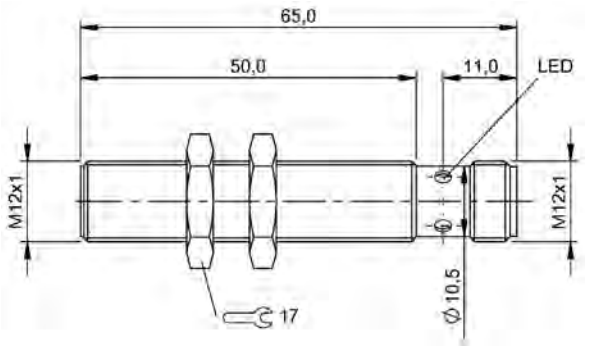

BES02FU

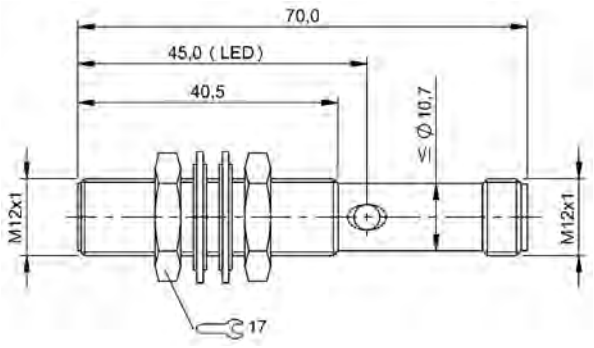

BES03AR

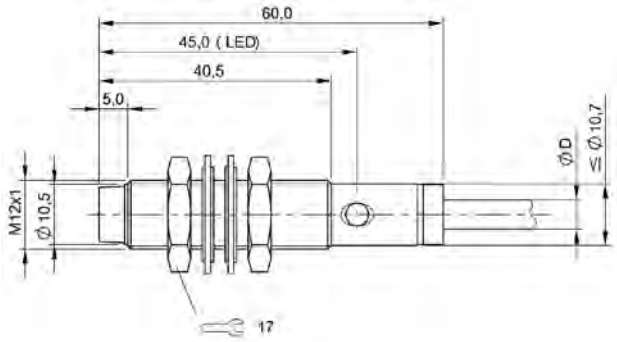

BES0285, BES0286, BES028F

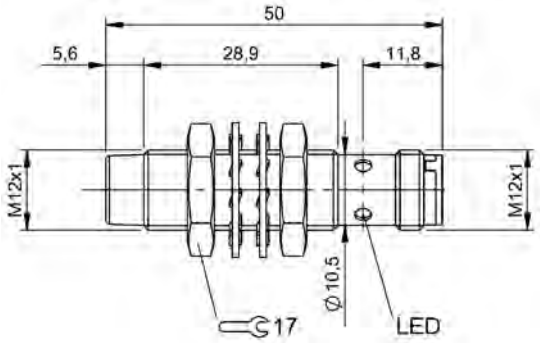

BES00UY

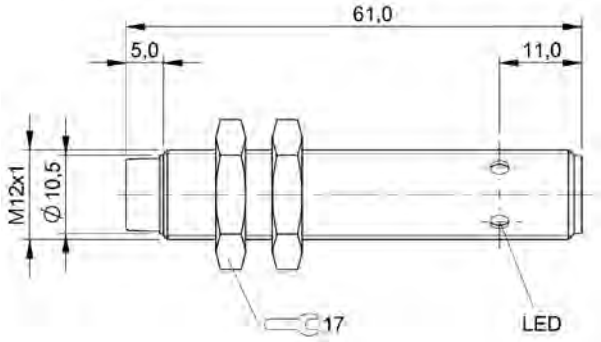

BES036T

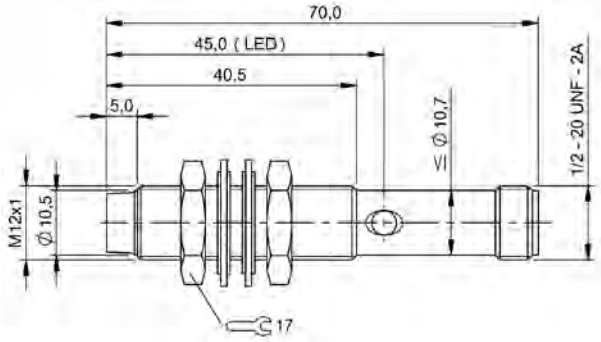

BES028A, BES0289

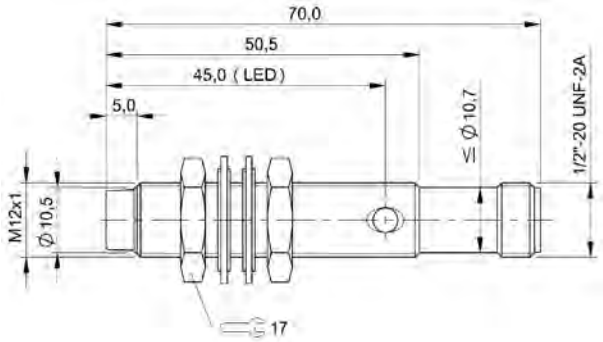

BES0330

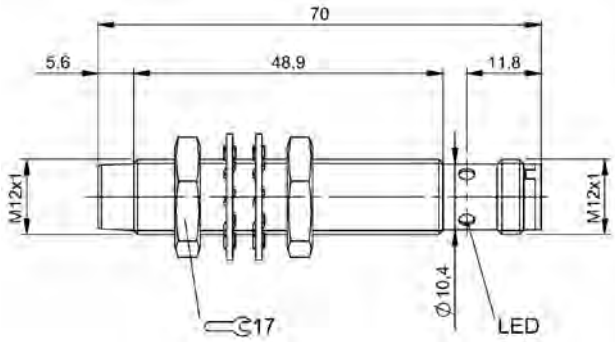

BES01H6, BES0178

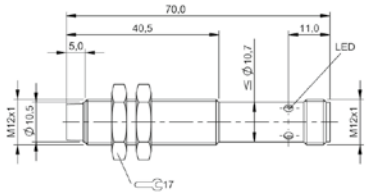

BES036R

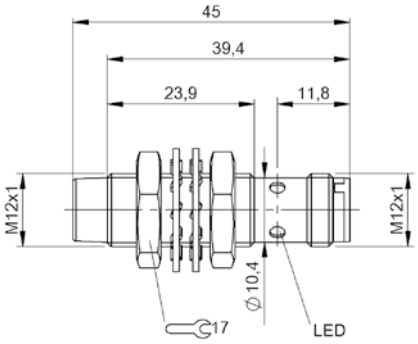

BES01PY

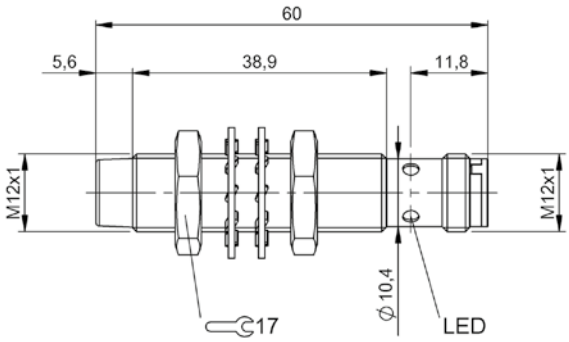

BES01PN, BES004N

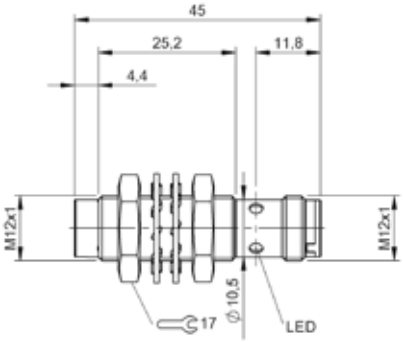

BES02WK

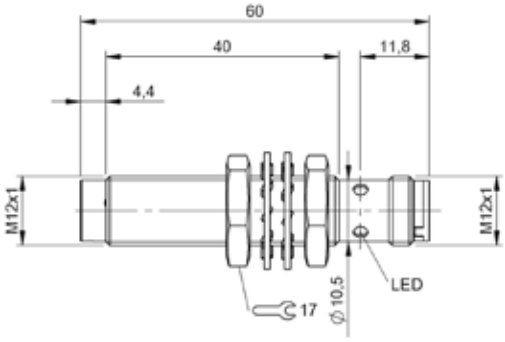

BES02WR

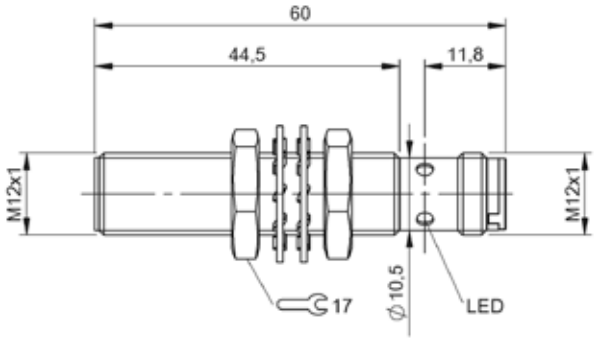

BES02WZ, BES02WY

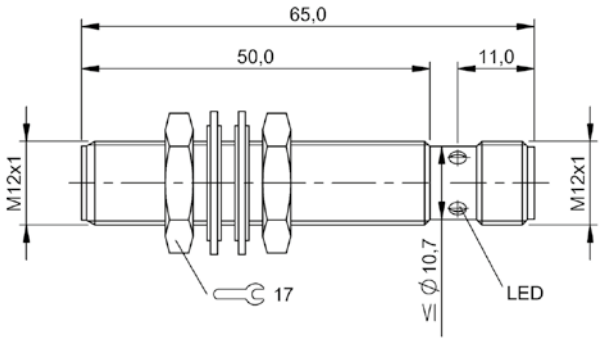

BES01ZN

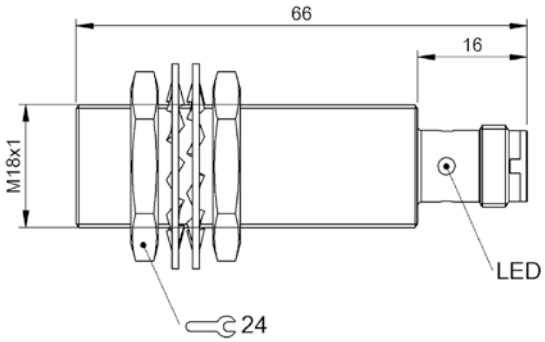

BES05EU

Do you need more details? Our Product Finder at www.balluff.com provides you with product-specific information, including technical drawings, data sheets, user guides and more for each individual product. All items are available for download.

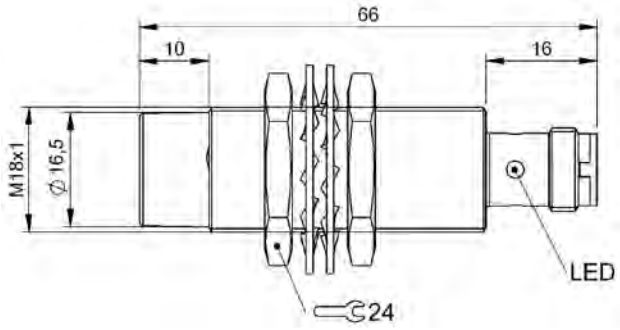

BES05EY

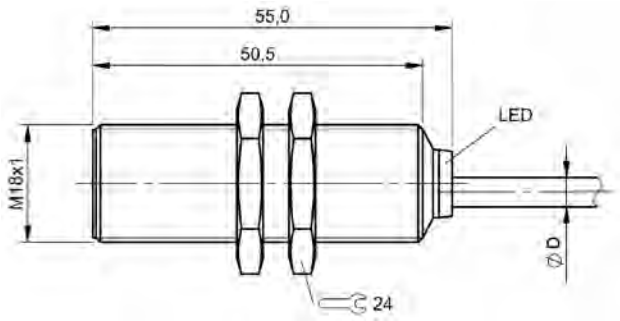

BES0083, BES008E, BES007H, BES007J, BES0089, BES008F, BES008H

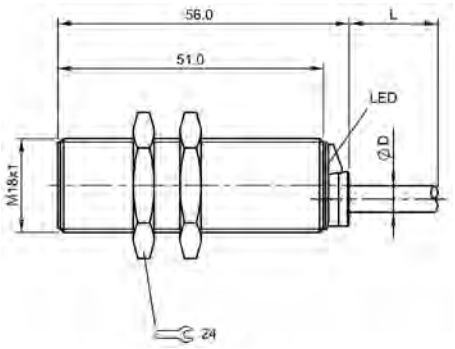

BES02AU, BES02AW

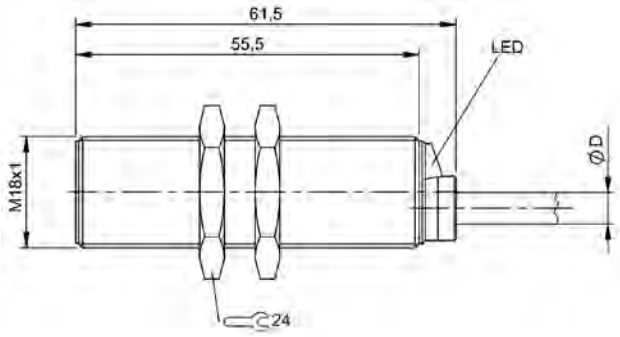

BES028L, BES028N

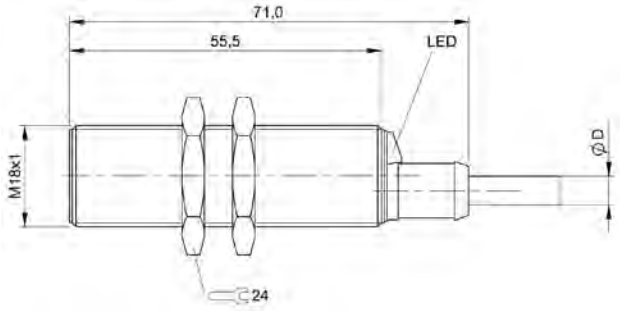

BES028U

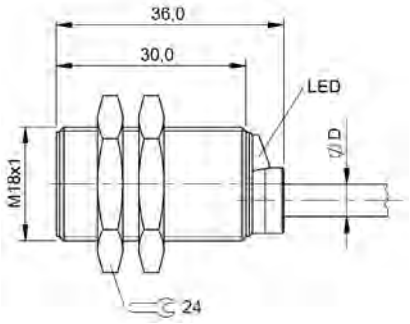

BES04F1

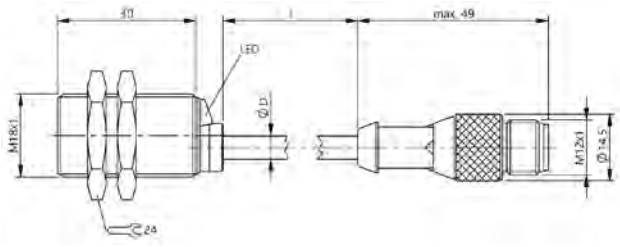

BES00R5

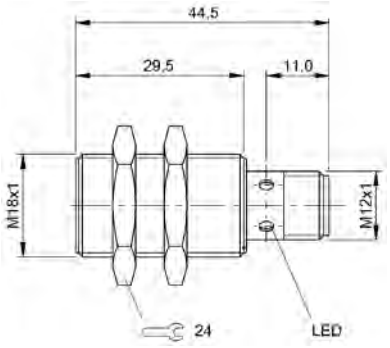

BES00R6, BES00RC, BES02P3

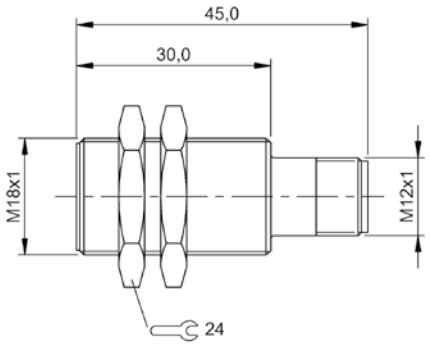

BES02ET

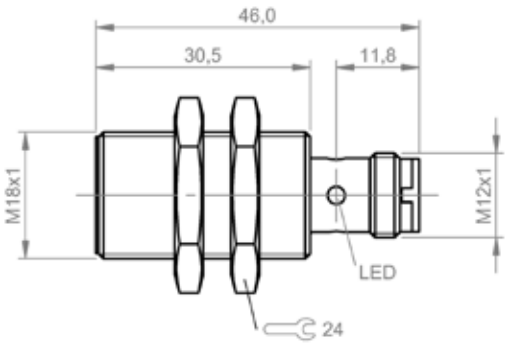

BES00EY

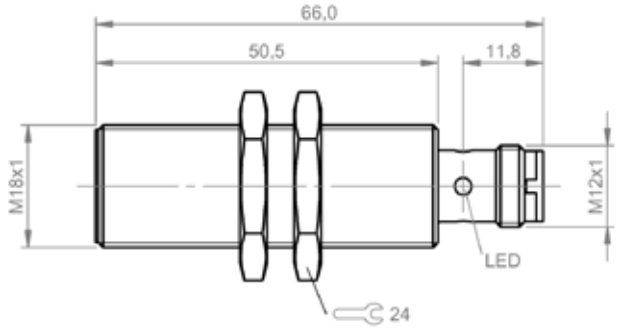

BES0086, BES008L, BES03RP

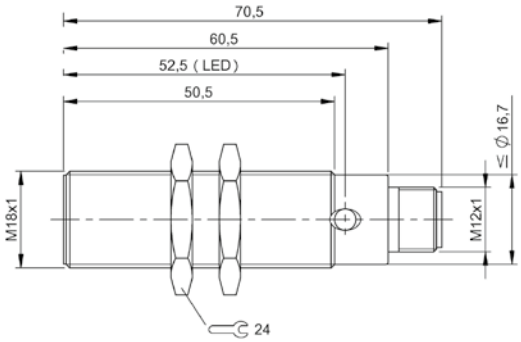

BES028R

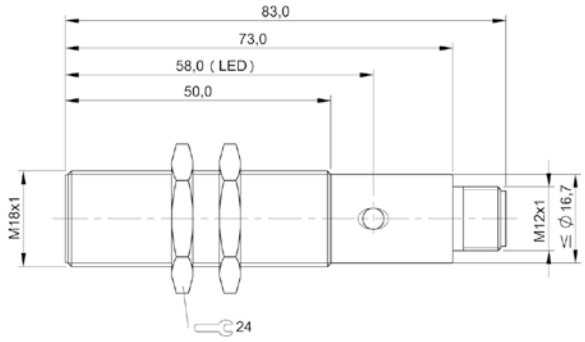

BES02EU

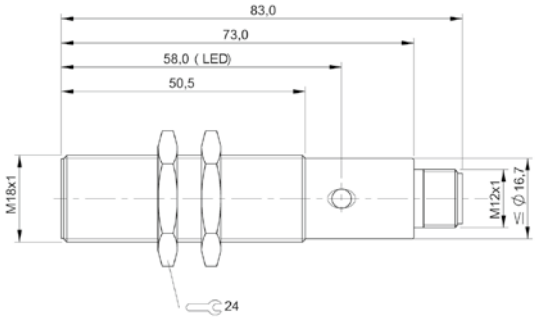

BES01CW, BES015N, BES01JW

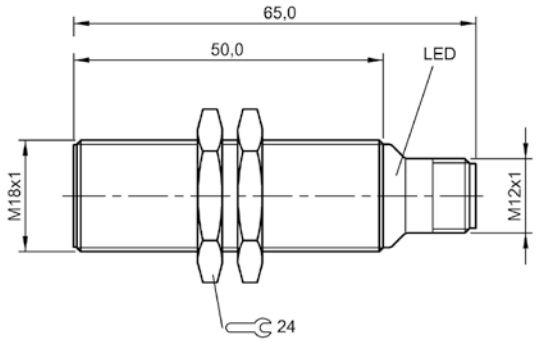

BES007M

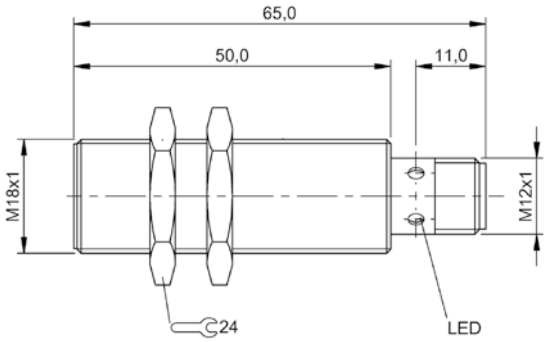

BES02H0

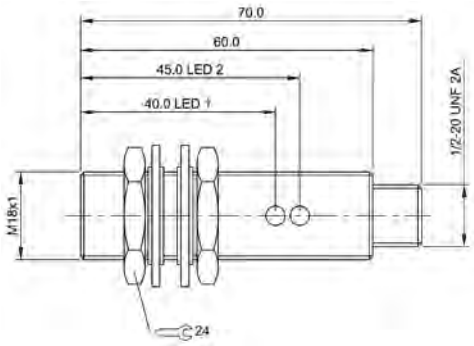

BES02ZE

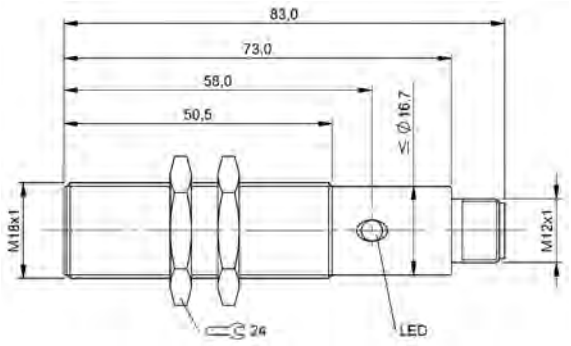

BES0496

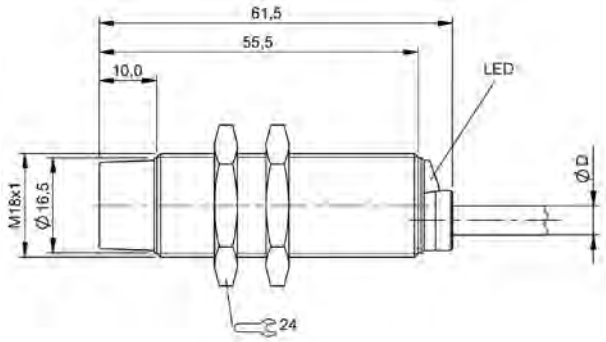

BES02C5, BES0292

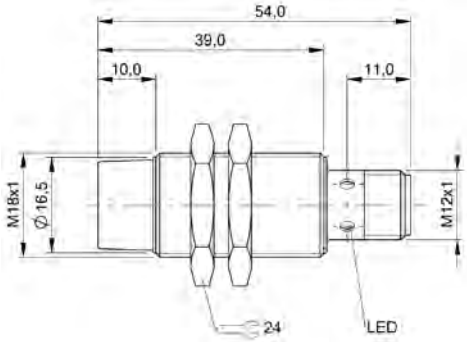

BES00WM

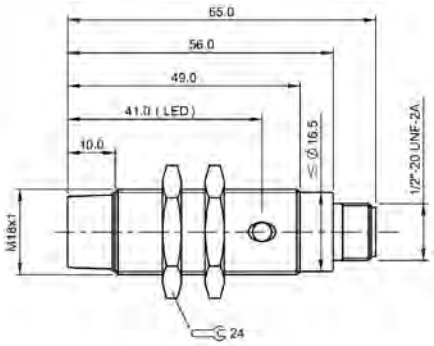

BES02C7

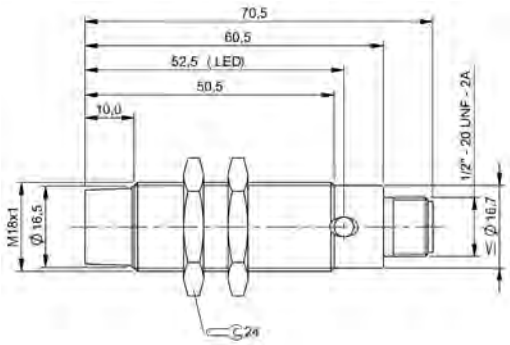

BES0296

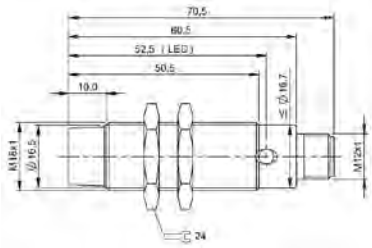

BES0297

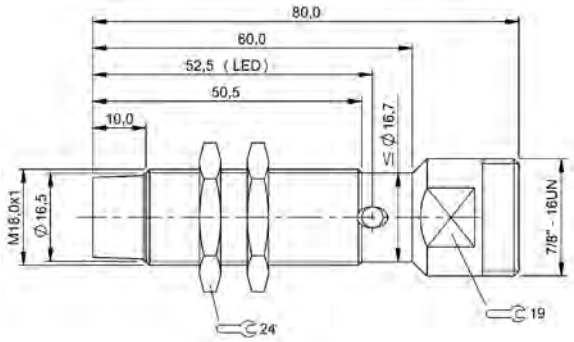

BES0298

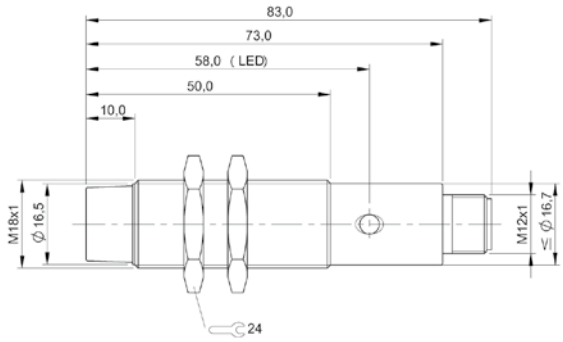

BES01HY, BES01HW, BES016W

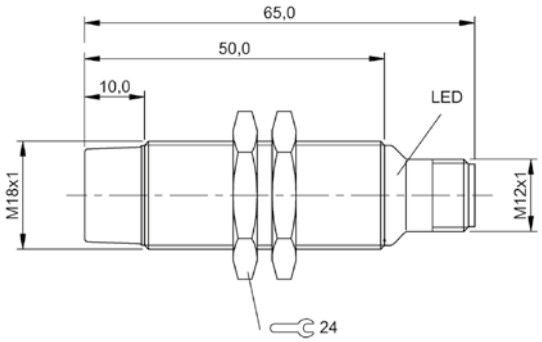

BES0070

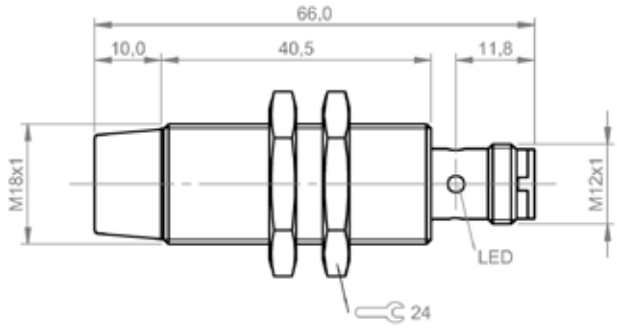

BES03RM

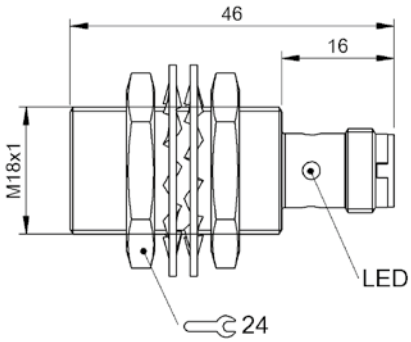

BES05ER

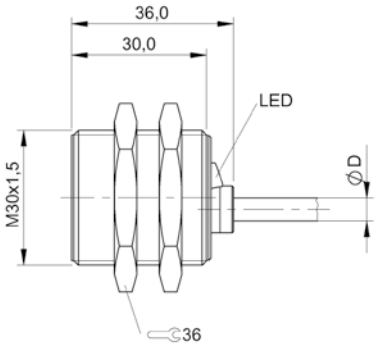

BES00RE, BES00RT, BES00LR

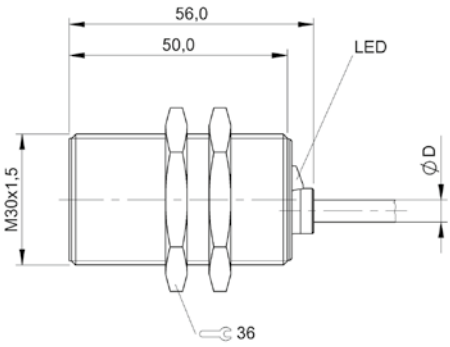

BES009E, BES00A1

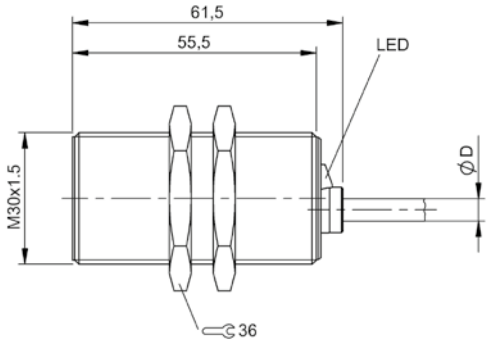

BES029L, BES029M

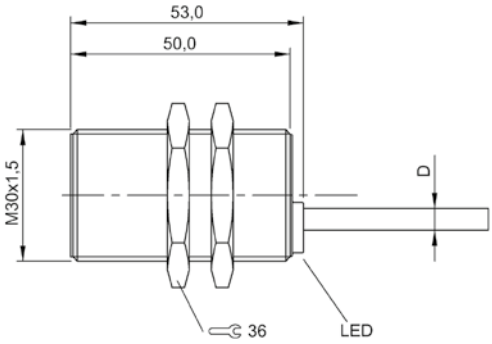

BES00AA, BES00AC

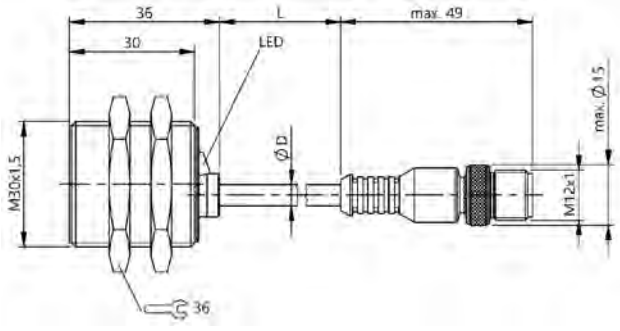

BES00LT

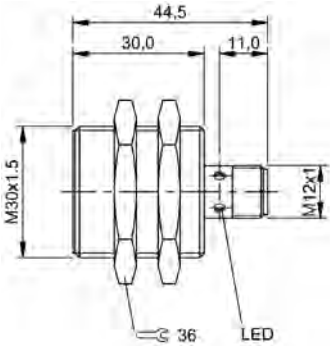

BES00RP, BES00RW, BES00LU

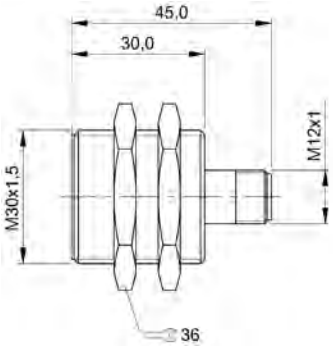

BES02F0

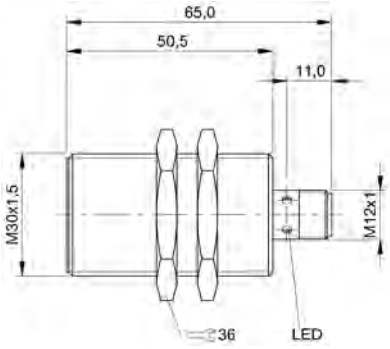

BES00A3

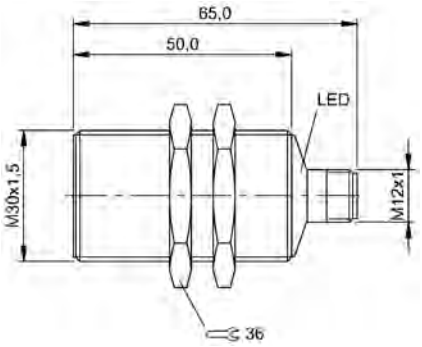

BES00A4

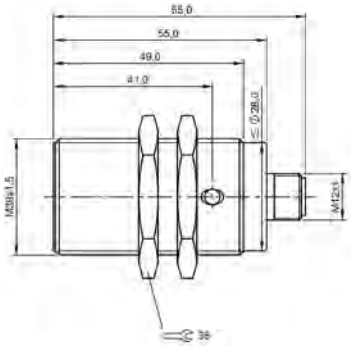

BES0316

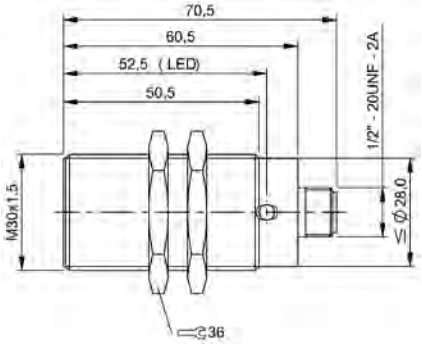

BES02E9

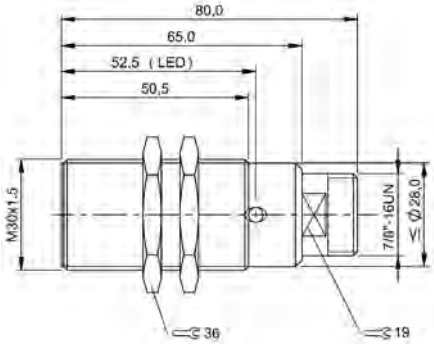

BES029W

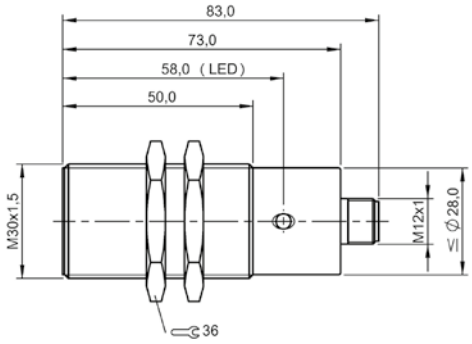

BES02F1, BES01EE, BES0167, BES01EA, BES01EC, BES0166

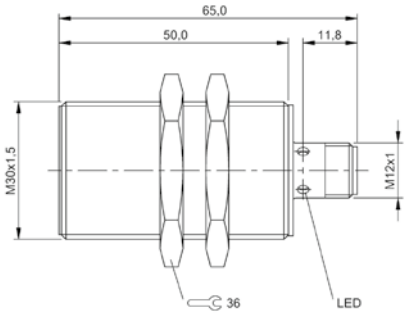

BES00AF

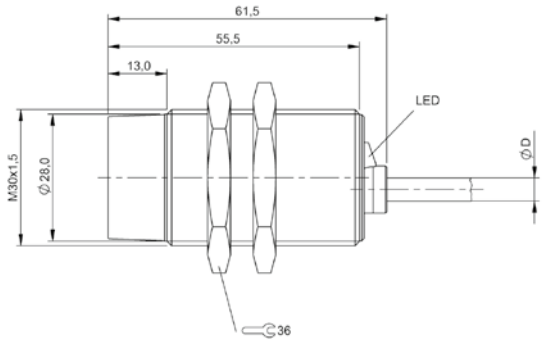

BES02A5

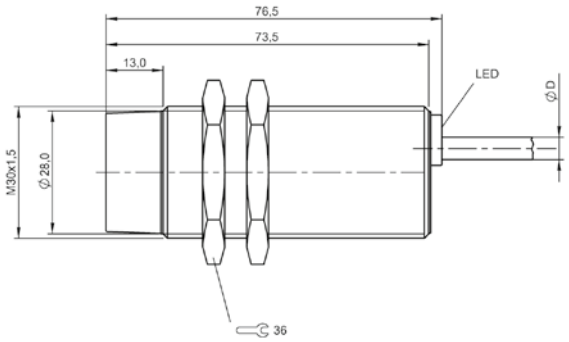

BES00AY

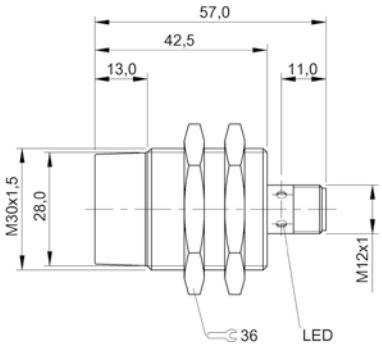

BES00Y0

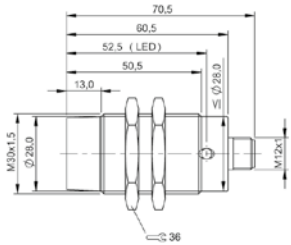

BES02AC

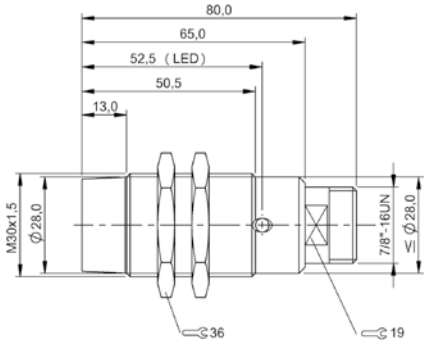

BES02AE

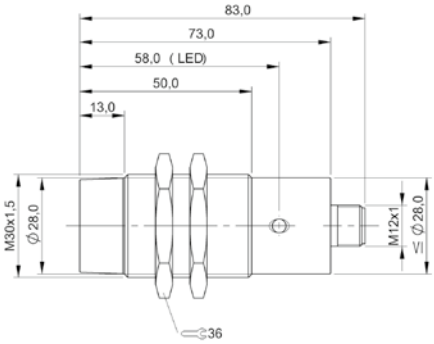

BES02FN, BES01JE, BES01JC

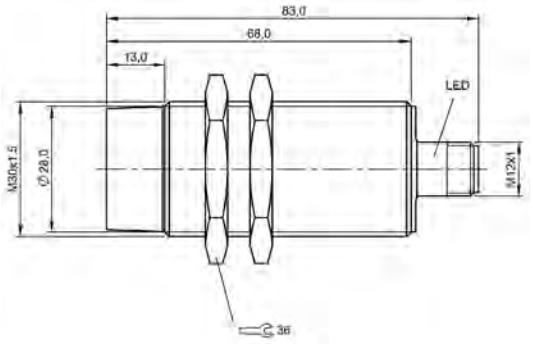

BES00AZ

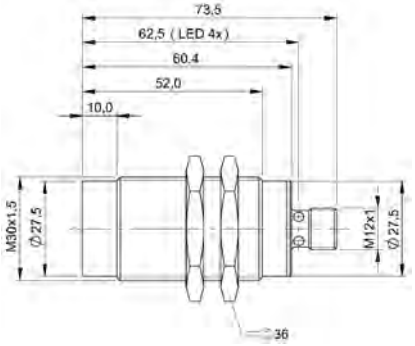

BES02YJ

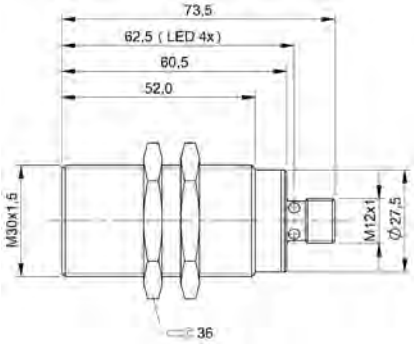

BES02YM, BES02YL

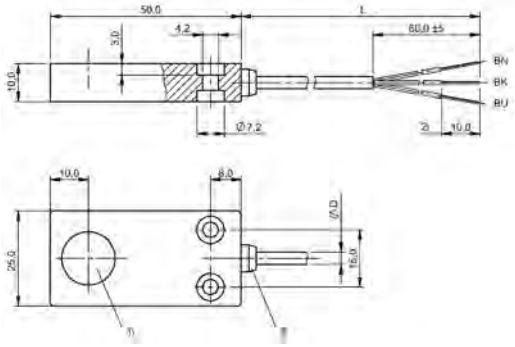

1) Sensing surface, 2) tinned, 3) LED red

BES0341

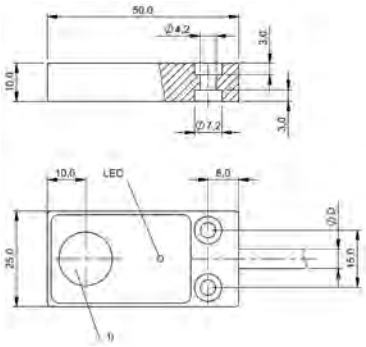

1) Sensing surface

BES01FJ, BES01FK, BES01FM, BES017H, BES032R

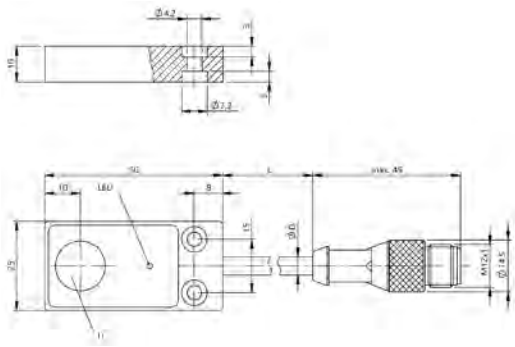

1) Sensing surface

BES01FN, BES0153

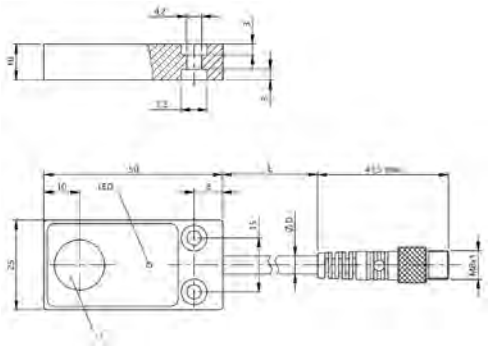

1) Sensing surface

BES01FT

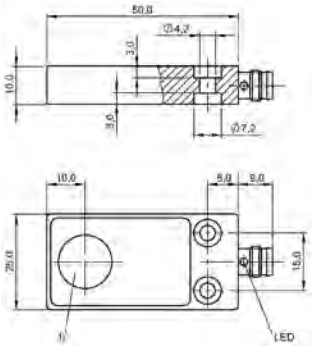

1) Sensing surface

BES01FR

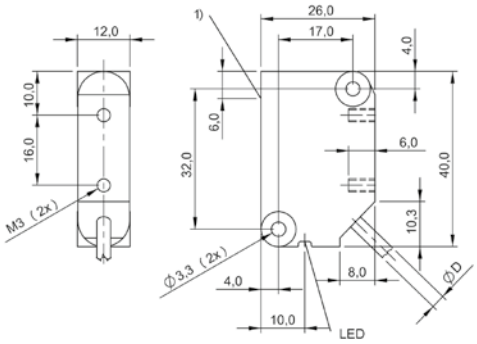

1) Sensing surface Ø8

BES02CT, BES02CU, BES01Z5

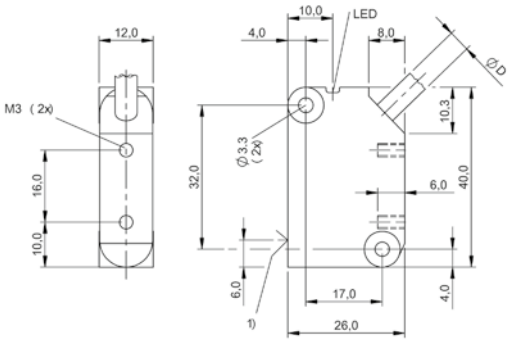

1) Sensing surface Ø8

BES01YZ

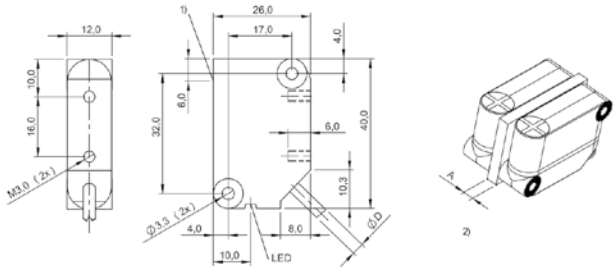

1) Sensing surface Ø8, 2) see remarks

BES02CY

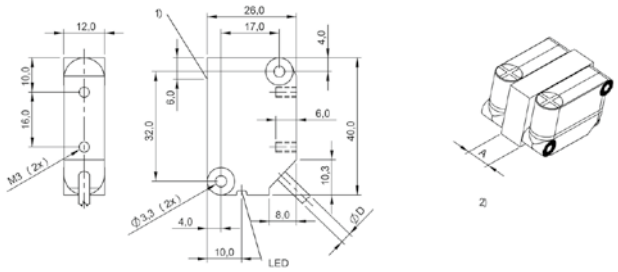

1) Sensing surface Ø8, 2) see remarks

BES01ZA, BES01ZC

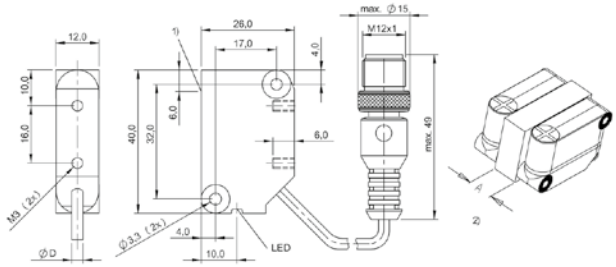

1) Sensing surface Ø8, 2) see remarks

BES01Z8

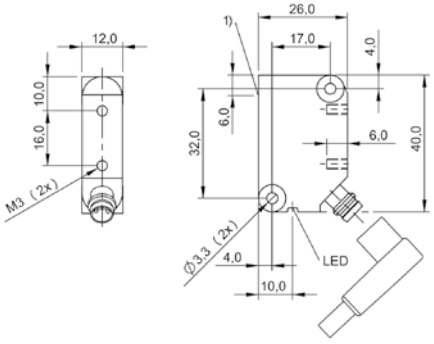

1) Sensing surface Ø8

BES01Z7, BES048A

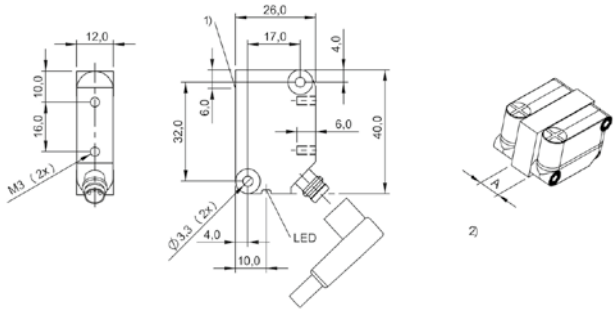

1) Sensing surface Ø8, 2) see remarks

BES01ZE, BES01Z2

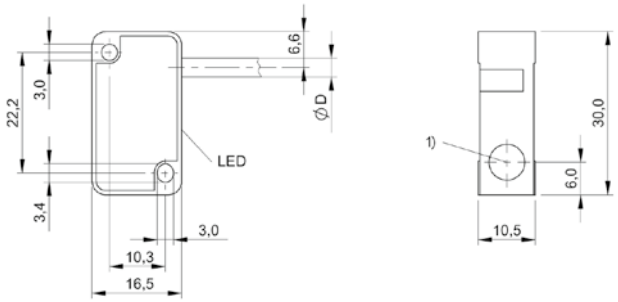

1) Sensing surface

BES01NH, BES01N5, BES01N6, BES01N8, BES01N9, BES01MM

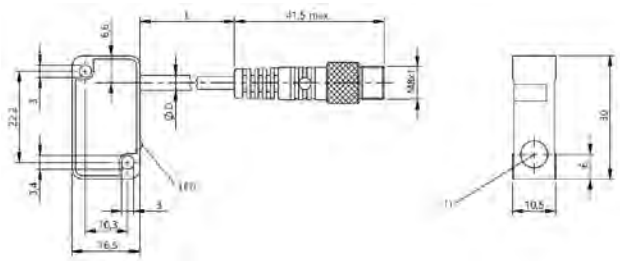

1) Sensing surface

BES01NA, BES01MT

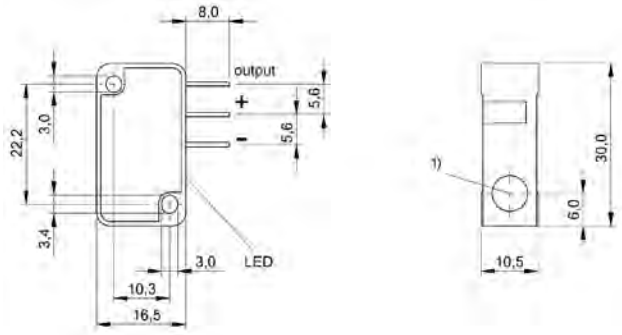

1) Sensing surface

BES01N1

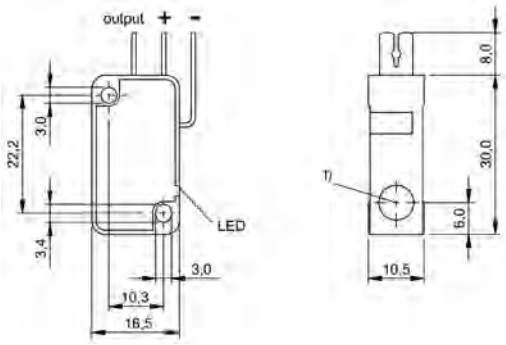

1) Sensing surface

BES01N2

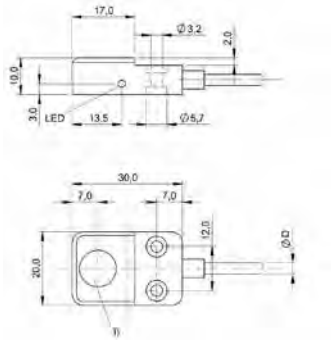

1) Sensing surface

BES033H, BES033J

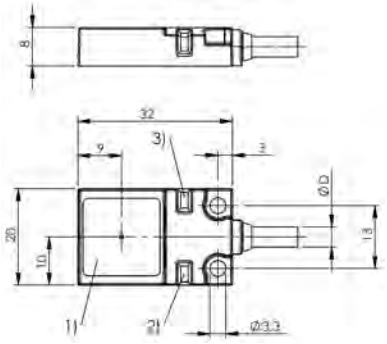

1) Sensing surface, 2) LED green, 3) LED yellow

BES01W0, BES01W4

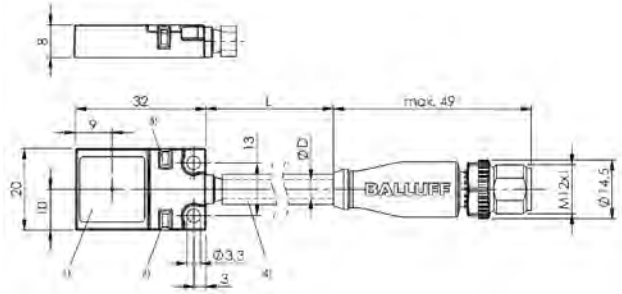

1) Sensing surface, 2) LED green, 3) LED yellow, 4) Silicon tube D=7mm

BES048N, BES048Z

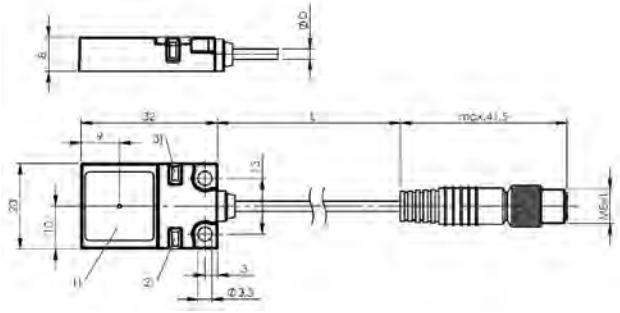

1) Sensing surface, 2) LED green, 3) LED yellow

BES01WE, BES01WF

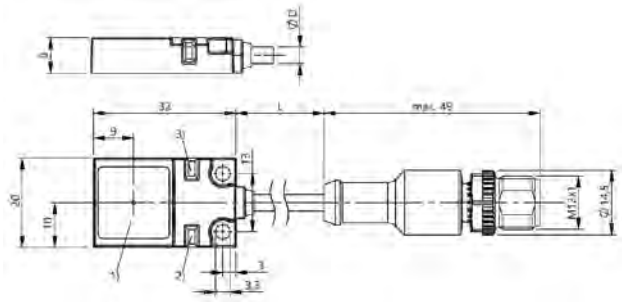

1) Sensing surface, 2) LED green, 3) LED yellow

BES01W2, BES01W3

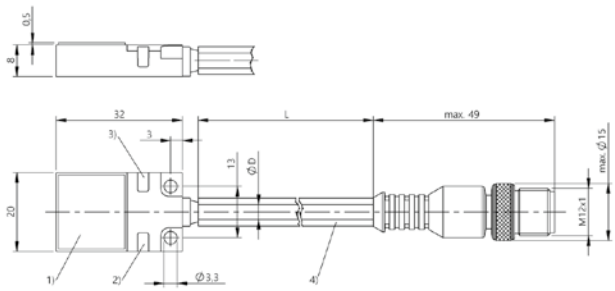

1) Sensing surface, 2) LED green, 3) LED yellow, 4) Silicon tube D=7mm

BES0314

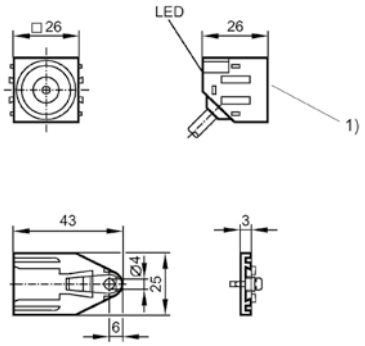

1) Sensing surface

BES030E, BES030F

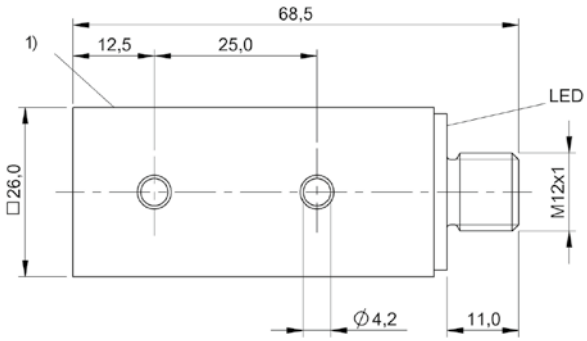

1) Sensing surface

BES022Z

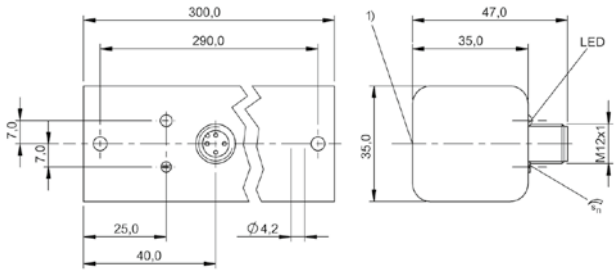

1) Sensing surface

BES02TN

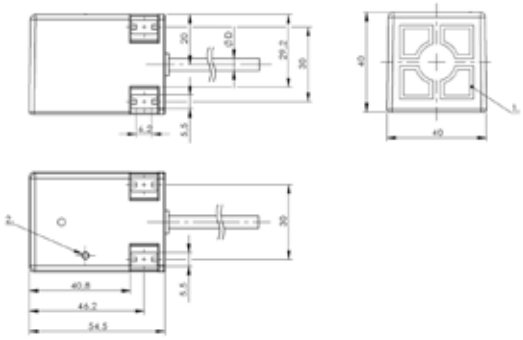

1) Sensing surface, 2) LED yellow

BES052M

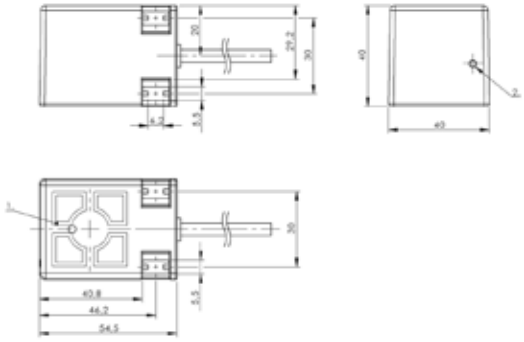

1) Sensing surface, 2) LED yellow

BES0555

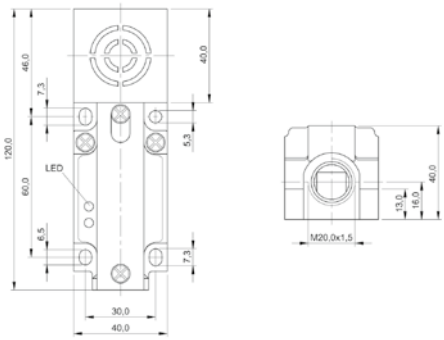

BES020Y, BES020Z, BES023Y

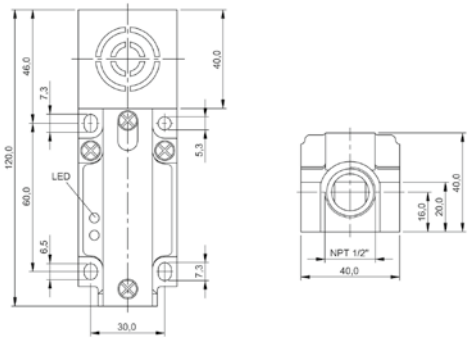

BES0241, BES0244, BES0247

Do you need more details? Our Product Finder at www.balluff.com provides you with product-specific information, including technical drawings, data sheets, user guides and more for each individual product. All items are available for download.

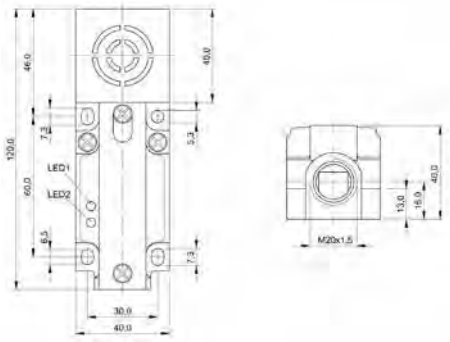

BES0201, BES0209, BES0206, BES020C

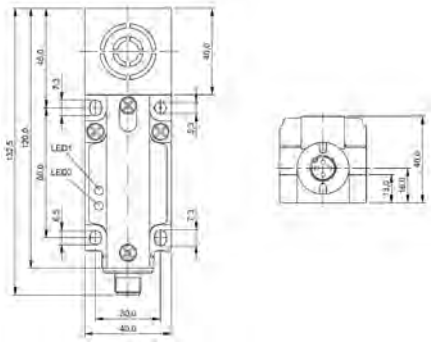

BES020A, BES0236, BES020E

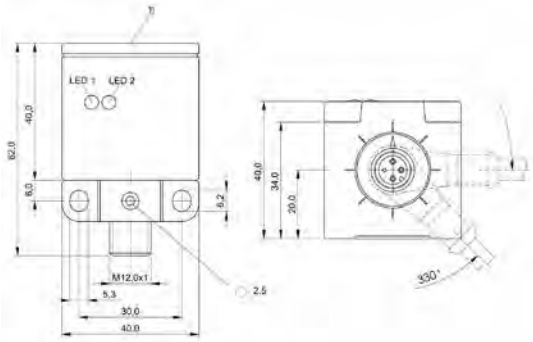

1) Sensing surface

BES021W, BES0217

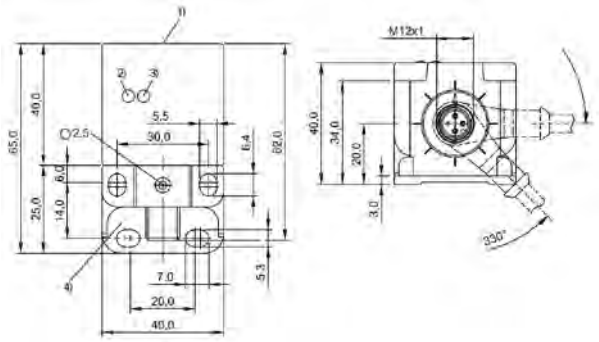

1) Sensing surface, 2) LED function indicator, 3) LED Power, 4) Metal

BES03PN

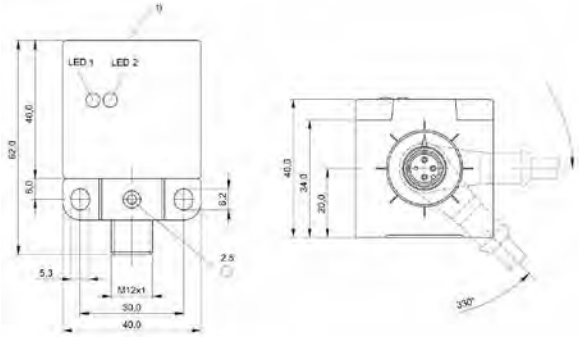

1) Sensing surface

BES021Z, BES021E

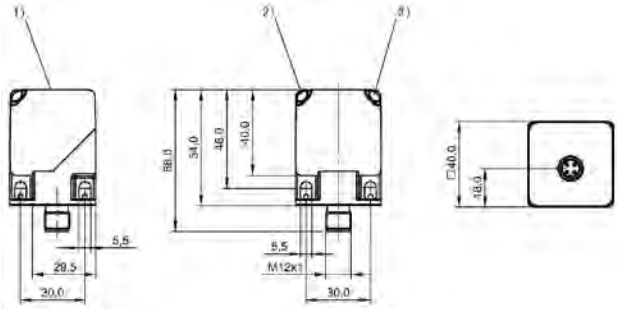

1) Sensing surface, 2) LED yellow, 3) LED green

BES0308

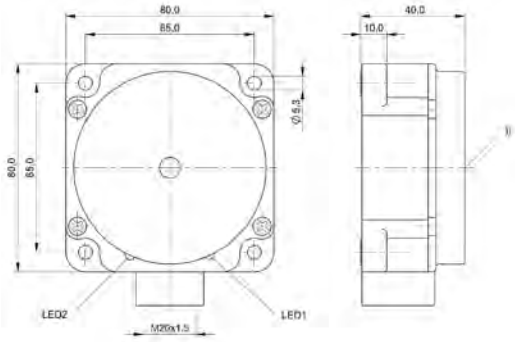

1) Sensing surface

BES023P, BES023R

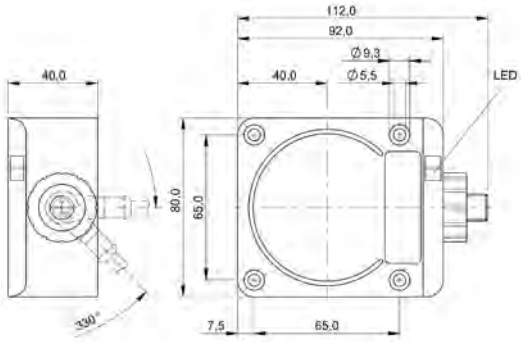

BES030C

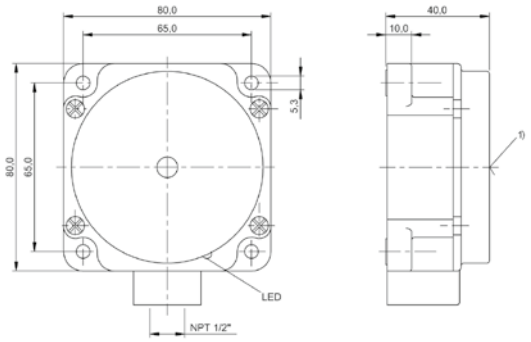

1) Sensing surface

BES022R

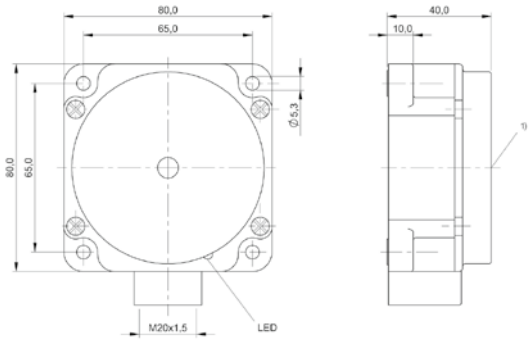

1) Sensing surface

BES024F

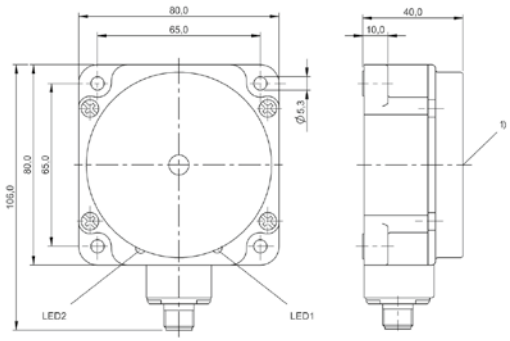

1) Sensing surface

BES023W

Polarized normally open	**BES001L** BES M08MG-GSC20B-BV02		
Non-polarized normally open		**BES001P** BES M08MG-USC20B-BP03	
Dimension	Ø 8 x 40 mm	Ø 8 x 40 mm	
Style	M8x1	M8x1	
Installation	for flush mounting	for flush mounting	
Range	2 mm	2 mm	
Switching output	polarized normally open (NO)	non-polarized normally open (NO)	
Switching frequency	1500 Hz	1500 Hz	
Housing material	Brass	Brass	
Surface protection	Nickel-free coated	Nickel-free coated	
Material sensing surface	PBT	PBT	
Connection	Cable, 2.00 m, PVC	Cable, 3.00 m, PUR	
Operating voltage Ub	10...36 VDC	10...36 VDC	
Ambient temperature	-25...70 °C	-25...70 °C	
Protection degree	IP67	IP66	
Approval/Conformity	CE, cULus, EAC	CE, cULus, EAC	
Productview	Page 152	Page 152	

			BES0021 BES M08MG-GSC20B-BP03	
	BES001T BES M08MG-USC20B-BV02	**BES001U** BES M08MG-USC20B-BV03		**BES001W** BES M08MG-USC20B-BV05
	Ø 8 x 40 mm	Ø 8 x 40 mm	Ø 8 x 40 mm	Ø 8 x 40 mm
	M8x1	M8x1	M8x1	M8x1
	for flush mounting	for flush mounting	for flush mounting	for flush mounting
	2 mm	2 mm	2 mm	2 mm
	non-polarized normally open (NO)	non-polarized normally open (NO)	polarized normally open (NO)	non-polarized normally open (NO)
	1500 Hz	1500 Hz	1500 Hz	1500 Hz
	Brass	Brass	Brass	Brass
	Nickel-free coated	Nickel-free coated	Nickel-free coated	Nickel-free coated
	PBT	PBT	PBT	PBT
	Cable, 2.00 m, PVC	Cable, 3.00 m, PVC	Cable, 3.00 m, PUR	Cable, 5.00 m, PVC
	10...36 VDC	10...36 VDC	10...36 VDC	10...36 VDC
	-25...70 °C	-25...70 °C	-25...70 °C	-25...70 °C
	IP66	IP66	IP67	IP66
	CE, cULus, EAC	CE, cULus, EAC	CE, cULus, EAC	CE, cULus, EAC
	Page 152	Page 152	Page 152	Page 152

Polarized normally open			
Non-polarized normally open			
Non-polarized normally closed	**BES004T** BES M12MG-USC30B-BV02	**BES03HH** BES M08MG-UOC20B-BV03	
Dimension	Ø 12 x 43 mm	Ø 8 x 40 mm	
Style	M12x1	M8x1	
Installation	for flush mounting	for flush mounting	
Range	3 mm	2 mm	
Switching output	non-polarized normally open (NO)	non-polarized normally closed (NC)	
Switching frequency	1300 Hz	1500 Hz	
Housing material	Brass	Brass	
Surface protection	Nickel-free coated	Nickel-free coated	
Material sensing surface	PA 12	PBT	
Connection	Cable, 2.00 m, PVC	Cable, 3.00 m, PVC	
Operating voltage Ub	10...36 VDC	10...36 VDC	
Ambient temperature	-25...70 °C	-25...70 °C	
Protection degree	IP67	IP67	
Approval/Conformity	CE, cULus, EAC	CE, cULus, EAC	
Productview	Page 152	Page 152	

	BES001Z BES M08MG-GSC20B-BP00,3-GS04	BES0324 BES M08MG-GSC20B-BP00,3-GS04-101	BES0022 BES M08ME1-GSC20B-S04G	
				BES001Y BES M08ME1-USC20B-S04G
	Ø 8 x 40 mm	Ø 8 x 40 mm	Ø 8 x 50 mm	Ø 8 x 50 mm
	M8x1	M8x1	M8x1	M8x1
	for flush mounting	for flush mounting	for flush mounting	for flush mounting
	2 mm	2 mm	2 mm	2 mm
	polarized normally open (NO)	polarized normally open (NO)	polarized normally open (NO)	non-polarized normally open (NO)
	1500 Hz	1500 Hz	1500 Hz	1500 Hz
	Brass	Brass	Brass	Brass
	Nickel-free coated	Nickel-free coated	Nickel-free coated	Nickel-free coated
	PBT	ceramic coated	PBT	PBT
	Cable with connector, M12x1 connector, 4-pin, 0.30 m, PUR	Cable with connector, M12x1 connector, 4-pin, 0.30 m, PUR	Connector, M12x1 connector, 4-pin	Connector, M12x1 connector, 4-pin
	10...36 VDC	10...30 VDC	10...36 VDC	10...36 VDC
	-25...70 °C	-25...70 °C	-25...70 °C	-25...70 °C
	IP67	IP67	IP67	IP67
	CE, cULus, EAC	CE, cULus, EAC	CE, cULus, EAC	CE, cULus, EAC
	Page 152	Page 152	Page 152	Page 152

Polarized normally open			
Polarized normally closed			
Non-polarized normally open	**BES004P** BES M12MG-USC30B-BP03	**BES004T** BES M12MG-USC30B-BV02	
Non-polarized normally closed			
Dimension	Ø 12 x 43 mm	Ø 12 x 43 mm	
Style	M12x1	M12x1	
Installation	for flush mounting	for flush mounting	
Range	3 mm	3 mm	
Switching output	non-polarized normally open (NO)	non-polarized normally open (NO)	
Switching frequency	1300 Hz	1300 Hz	
Housing material	Brass	Brass	
Surface protection	Nickel-free coated	Nickel-free coated	
Material sensing surface	PA 12	PA 12	
Connection	Cable, 3.00 m, PUR	Cable, 2.00 m, PVC	
Operating voltage Ub	10...36 VDC	10...36 VDC	
Ambient temperature	-25...70 °C	-25...70 °C	
Protection degree	IP67	IP67	
Approval/Conformity	CE, cULus, EAC	CE, cULus, EAC	
Productview	Page 152	Page 152	

	BES0046 BES M12MG-GSC30B-BV03			
	BES0474 BES M12MG-GOC30B-BV03			
		BES004U BES M12MG-USC30B-BV03	**BES004W** BES M12MG-USC30B-BV05	
				BES03HM BES M12MG-UOC30B-BV03
	Ø 12 x 43 mm	Ø 12 x 43 mm	Ø 12 x 43 mm	Ø 12 x 43 mm
	M12x1	M12x1	M12x1	M12x1
	for flush mounting	for flush mounting	for flush mounting	for flush mounting
	3 mm	3 mm	3 mm	3 mm
	polarized normally open (NO)	non-polarized normally open (NO)	non-polarized normally open (NO)	non-polarized normally closed (NC)
	1300 Hz	1300 Hz	1300 Hz	1300 Hz
	Brass	Brass	Brass	Brass
	Nickel-free coated	Nickel-free coated	Nickel-free coated	Nickel-free coated
	PA 12	PA 12	PA 12	PA 12
	Cable, 3.00 m, PVC	Cable, 3.00 m, PVC	Cable, 5.00 m, PVC	Cable, 3.00 m, PVC
	10...36 VDC	10...36 VDC	10...36 VDC	10...36 VDC
	-25...70 °C	-25...70 °C	-25...70 °C	-25...70 °C
	IP67	IP67	IP67	IP67
	CE, cULus, EAC	CE, cULus, EAC	CE, cULus, EAC	CE, cULus, EAC
	Page 152	Page 152	Page 152	Page 152

Polarized normally open	**BES0042** BES M12MG-GSC30B-BP00,3-GS04	**BES0326** BES M12MG-GSC30B-BP00,3-GS04-101	
Non-polarized normally open			
Dimension	Ø 12 x 43 mm	Ø 12 x 43 mm	
Style	M12x1	M12x1	
Installation	for flush mounting	for flush mounting	
Range	3 mm	3 mm	
Switching output	polarized normally open (NO)	polarized normally open (NO)	
Switching frequency	1300 Hz	1300 Hz	
Housing material	Brass	Brass	
Surface protection	Nickel-free coated	Nickel-free coated	
Material sensing surface	PA 12	LCP PTFE	
Connection	Cable with connector, M12x1 connector, 4-pin, 0.30 m, PUR	Cable with connector, M12x1 connector, 4-pin, 0.30 m, PUR	
Operating voltage Ub	10...36 VDC	10...30 VDC	
Ambient temperature	-25...70 °C	-25...70 °C	
Protection degree	IP67	IP67	
Approval/Conformity	CE, cULus, EAC	CE, cULus, EAC	
Productview	Page 152	Page 152	

	BES039W BES M12MG-GSC30B-BX00,3-GS04-U	BES003Z BES M12MF-GSC30B-S04G		
			BES0041 BES M12MF-USC30B-S04G	BES0073 BES M18MG-USC70B-BV02
	Ø 12 x 43 mm	Ø 12 x 50 mm	Ø 12 x 50 mm	Ø 18 x 46 mm
	M12x1	M12x1	M12x1	M18x1
	for flush mounting	for flush mounting	for flush mounting	for flush mounting
	3 mm	3 mm	3 mm	7 mm
	polarized normally open (NO)	polarized normally open (NO)	non-polarized normally open (NO)	non-polarized normally open (NO)
	1300 Hz	1300 Hz	1300 Hz	600 Hz
	Brass	Brass	Brass	Brass
	coated, PTFE	Nickel-free coated	Nickel-free coated	Nickel-free coated
	LCP PTFE	PA 12	PA 12	PA 12
	Cable with connector, M12x1 connector, 4-pin, 0.30 m, PUR	Connector, M12x1 connector, 4-pin	Connector, M12x1 connector, 4-pin	Cable, 2.00 m, PVC
	10...36 VDC	10...36 VDC	10...36 VDC	10...36 VDC
	-25...70 °C	-25...70 °C	-25...70 °C	-25...70 °C
	IP67	IP67	IP67	IP67
	CE, cULus, EAC	CE, cULus, EAC	CE, cULus, EAC	CE, cULus, EAC
	Page 152	Page 152	Page 152	Page 152

Polarized normally open			
Non-polarized normally open	**BES0074** BES M18MG-USC70B-BV03	**BES0071** BES M18MG-USC70B-BP03	
Dimension	Ø 18 x 46 mm	Ø 18 x 46 mm	
Style	M18x1	M18x1	
Installation	for flush mounting	for flush mounting	
Range	7 mm	7 mm	
Switching output	non-polarized normally open (NO)	non-polarized normally open (NO)	
Switching frequency	600 Hz	600 Hz	
Housing material	Brass	Brass	
Surface protection	Nickel-free coated	Nickel-free coated	
Material sensing surface	PA 12	PA 12	
Connection	Cable, 3.00 m, PVC	Cable, 3.00 m, PUR	
Operating voltage Ub	10...36 VDC	10...36 VDC	
Ambient temperature	-25...70 °C	-25...70 °C	
Protection degree	IP67	IP67	
Approval/Conformity	CE, cULus, EAC	CE, cULus, EAC	
Productview	Page 152	Page 152	

	BES006C BES M18MG-GSC70B-BP00,3-GS04	BES03FJ BES M18MG-GSC70B-BX00,3-GS04-U	BES0069 BES M18MF-GSC70B-S04K	
				BES006A BES M18MF-USC70B-S04K
	Ø 18 x 46 mm	Ø 18 x 46 mm	Ø 18 x 50 mm	Ø 18 x 50 mm
	M18x1	M18x1	M18x1	M18x1
	for flush mounting	for flush mounting	for flush mounting	for flush mounting
	7 mm	7 mm	7 mm	7 mm
	polarized normally open (NO)	polarized normally open (NO)	polarized normally open (NO)	non-polarized normally open (NO)
	600 Hz	600 Hz	600 Hz	600 Hz
	Brass	Brass	Brass	Brass
	Nickel-free coated	coated, PTFE	Nickel-free coated	Nickel-free coated
	PA 12	LCP PTFE	PA 12	PA 12
	Cable with connector, M12x1 connector, 4-pin, 0.30 m, PUR	Cable with connector, M12x1 connector, 4-pin, 0.30 m, PUR	Connector, M12x1 connector, 4-pin	Connector, M12x1 connector, 4-pin
	10...36 VDC	10...36 VDC	10...36 VDC	10...36 VDC
	-25...70 °C	-25...70 °C	-25...70 °C	-25...70 °C
	IP67	IP67	IP67	IP67
	CE, cULus, EAC	CE, cULus, EAC	CE, cULus, EAC	CE, cULus, EAC
	Page 153	Page 153	Page 153	Page 153

Polarized normally open	**BES0328** BES M18MF-GSC70B-S04G	**BES03FH** BES M18MF-GSC70B-S04G-U	
Non-polarized normally open			
Dimension	Ø 18 x 51 mm	Ø 18 x 51 mm	
Style	M18x1	M18x1	
Installation	for flush mounting	for flush mounting	
Range	7 mm	7 mm	
Switching output	polarized normally open (NO)	polarized normally open (NO)	
Switching frequency	600 Hz	600 Hz	
Housing material	Brass	Brass	
Surface protection	Nickel-free coated	coated, PTFE	
Material sensing surface	PA 12	LCP PTFE	
Connection	Connector, M12x1 connector, 4-pin	Connector, M12x1 connector, 4-pin	
Operating voltage Ub	10...36 VDC	10...36 VDC	
Ambient temperature	-25...70 °C	-25...70 °C	
Protection degree	IP67	IP67	
Approval/Conformity	CE, cULus, EAC	CE, cULus, EAC	
Productview	Page 153	Page 153	

		BES008R BES M30MF-GSC15B-BV02		
	BES02NR BES M18MF-USC70B-S04G		**BES0091** BES M30MF-USC15B-BV02	**BES0092** BES M30MF-USC15B-BV03
	Ø 18 x 51 mm	Ø 30 x 42.5 mm	Ø 30 x 42.5 mm	Ø 30 x 42.5 mm
	M18x1	M30x1.5	M30x1.5	M30x1.5
	for flush mounting	for flush mounting	for flush mounting	for flush mounting
	7 mm	15 mm	15 mm	15 mm
	non-polarized normally open (NO)	polarized normally open (NO)	non-polarized normally open (NO)	non-polarized normally open (NO)
	600 Hz	400 Hz	400 Hz	400 Hz
	Brass	Brass	Brass	Brass
	Nickel-free coated	Nickel-free coated	Nickel-free coated	Nickel-free coated
	PA 12	PA 12	PA 12	PA 12
	Connector, M12x1 connector, 4-pin	Cable, 2.00 m, PVC	Cable, 2.00 m, PVC	Cable, 3.00 m, PVC
	10...36 VDC	10...36 VDC	10...36 VDC	10...36 VDC
	-25...70 °C	-25...70 °C	-25...70 °C	-25...70 °C
	IP67	IP67	IP67	IP67
	CE, cULus, EAC	CE, cULus, EAC	CE, cULus, EAC	CE, cULus, EAC
	Page 153	Page 153	Page 153	Page 153

Polarized normally open		BES027K BES M30MF-GSC15B-BX00,3-GS04-U	
Non-polarized normally open	BES008Z BES M30MF-USC15B-BP03		
Dimension	Ø 30 x 42.5 mm	Ø 30 x 42.5 mm	
Style	M30x1.5	M30x1.5	
Installation	for flush mounting	for flush mounting	
Range	15 mm	15 mm	
Switching output	non-polarized normally open (NO)	polarized normally open (NO)	
Switching frequency	400 Hz	400 Hz	
Housing material	Brass	Brass	
Surface protection	Nickel-free coated	coated, PTFE	
Material sensing surface	PA 12	LCP PTFE	
Connection	Cable, 3.00 m, PUR	Cable with connector, M12x1 connector, 4-pin, 0.30 m, PUR	
Operating voltage Ub	10...36 VDC	10...36 VDC	
Ambient temperature	-25...70 °C	-25...70 °C	
Protection degree	IP67	IP67	
Approval/Conformity	CE, cULus, EAC	CE, cULus, EAC	
Productview	Page 153	Page 153	

	BES008W BES M30MF-GSC15B-S04K		**BES03KL** BES M30MF-GSC15B-S04G-U	
		BES0094 BES M30MF-USC15B-S04K		
	Ø 30 x 50 mm	Ø 30 x 50 mm	Ø 30 x 51 mm	
	M30x1.5	M30x1.5	M30x1.5	
	for flush mounting	for flush mounting	for flush mounting	
	15 mm	15 mm	15 mm	
	polarized normally open (NO)	non-polarized normally open (NO)	polarized normally open (NO)	
	400 Hz	400 Hz	400 Hz	
	Brass	Brass	Brass	
	Nickel-free coated	Nickel-free coated	coated, PTFE	
	PA 12	PA 12	LCP PTFE	
	Connector, M12x1 connector, 4-pin	Connector, M12x1 connector, 4-pin	Connector, M12x1 connector, 4-pin	
	10...36 VDC	10...36 VDC	10...36 VDC	
	-25...70 °C	-25...70 °C	-25...70 °C	
	IP67	IP67	IP67	
	CE, cULus, EAC	CE, cULus, EAC	CE, cULus, EAC	
	Page 153	Page 153	Page 154	

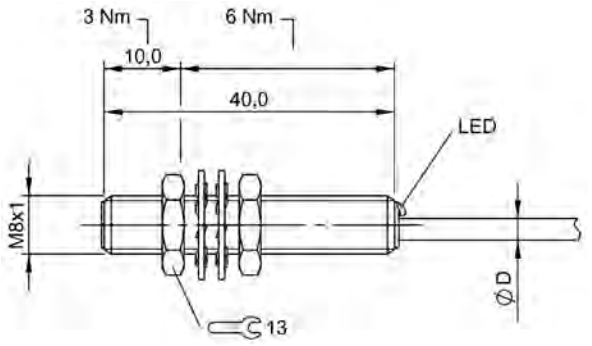

BES001L, BES001P, BES001T, BES001U, BES0021, BES001W, BES03HH

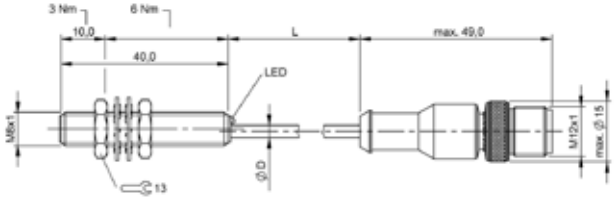

BES001Z

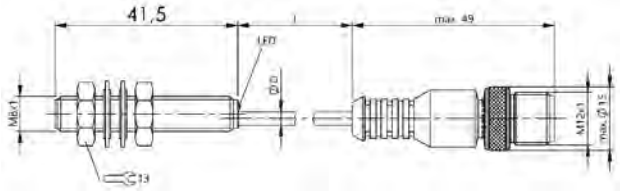

BES0324

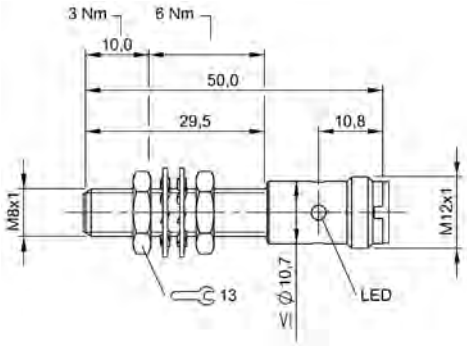

BES0022, BES001Y

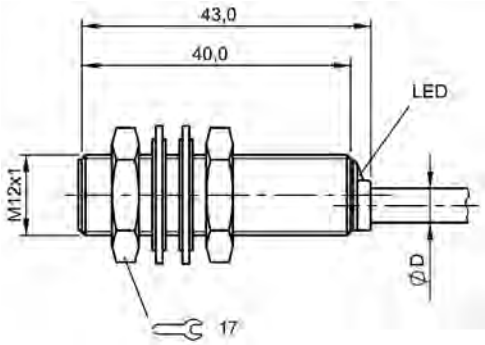

BES004P, BES004T, BES0046, BES0474, BES004U, BES004W, BES03HM

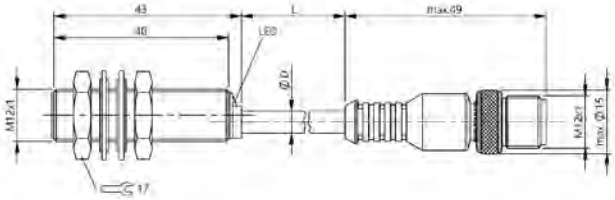

BES0042, BES0326, BES039W

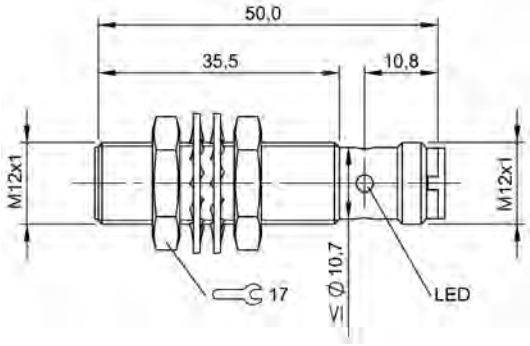

BES003Z, BES0041

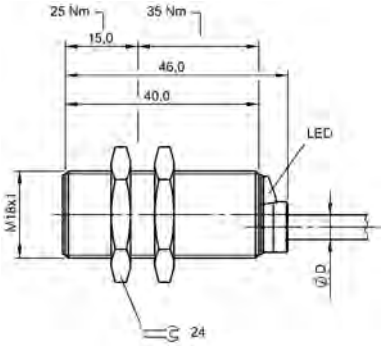

BES0073, BES0074, BES0071

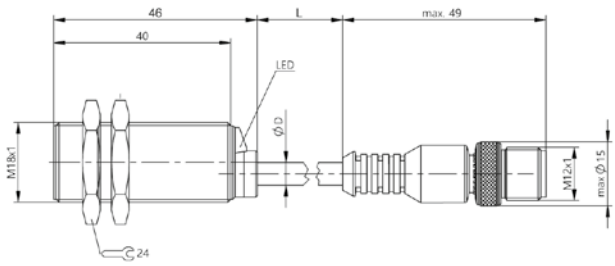

BES006C

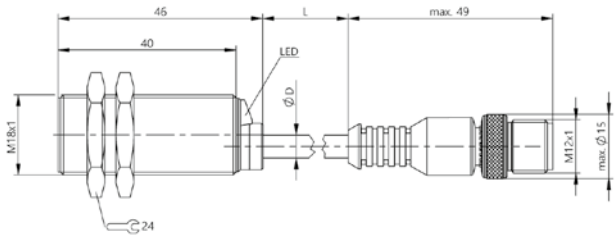

BES03FJ

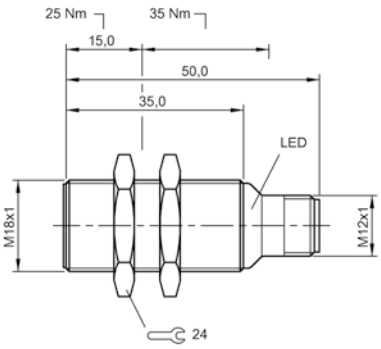

BES0069, BES006A

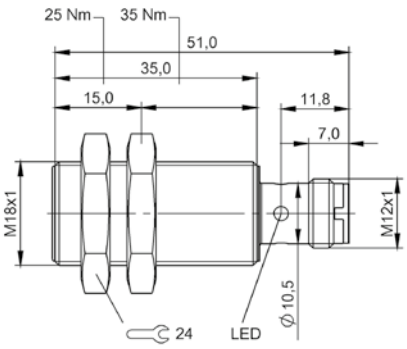

BES0328, BES02NR

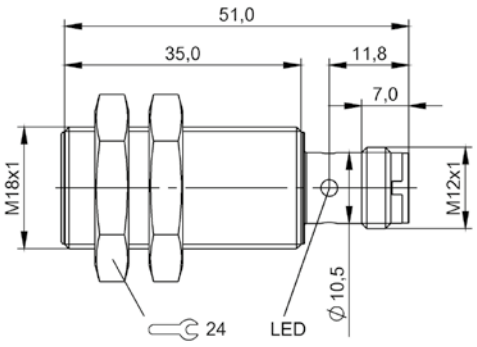

BES03FH

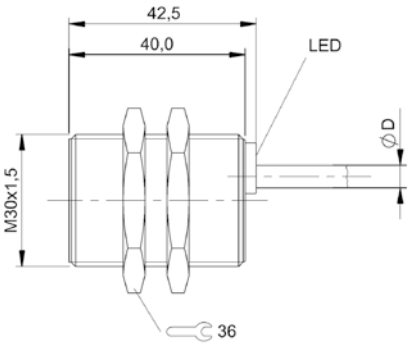

BES008R, BES0091, BES0092, BES008Z

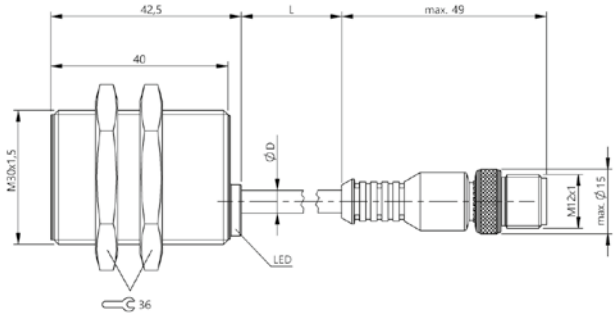

BES027K

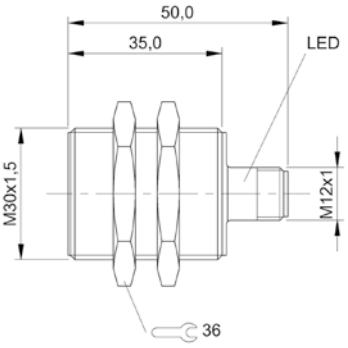

BES008W, BES0094

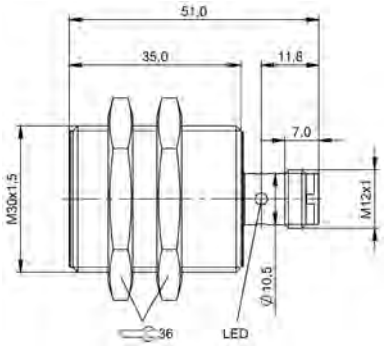

BES03KL

PNP normally open	**BHS006U** BHS G409N-PSD10-EP02	**BHS007J** BHS G409N-PSD10-EP00,3-GS49	
NPN normally open	**BHS006Y** BHS G409N-NSD10-EP02		
Dimension	Ø 4.2 x 32 mm	Ø 4.2 x 32 mm	
Style	D4.2	D4.2	
Installation	for flush mounting	for flush mounting	
Installation length from contact surface	—	—	
Range	1 mm	1 mm	
Switching frequency	3000 Hz	3000 Hz	
Housing material	Stainless steel	Stainless steel	
Surface protection	—	—	
Material sensing surface	Ceramic	Ceramic	
Connection	Cable, 2.00 m, PUR	Cable with connector, M8x1 connector, 3-pin, 0.30 m, PUR	
Operating voltage Ub	10...30 VDC	10...30 VDC	
Ambient temperature	-25...80 °C	-25...80 °C	
Pressure rating max.	500 bar	500 bar	
Magnetic field immune	—	—	
Protection degree	IP68	IP68	
Approval/Conformity	CE, cULus, EAC	CE, cULus, EAC	
Productview	Page 178	Page 178	

	BHS006N BHS G403N-PSD10-S26	BHS005H BHS G408N-PSC10-S49	BES055Y BES M05EE1-PSC08B-EV00,9-116	BES03H6 BES M05EG-PSC08B-BP02
	Ø 4.2 x 40.5 mm	Ø 4.2 x 47 mm	Ø 5 x 42 mm	Ø 5 x 42 mm
	D4.2	D4.2	M5x0.5	M5x0.5
	for flush mounting	for flush mounting	for flush mounting	for flush mounting
	—	—	—	—
	1 mm	1 mm	0.8 mm	0.8 mm
	3000 Hz	3000 Hz	5000 Hz	3000 Hz
	Stainless steel	Stainless steel	Stainless steel	Stainless steel
	—	—	—	—
	Ceramic	Ceramic	Ceramic	Ceramic
	Connector, M5x0.5 plug	Connector, M8x1 connector, 3-pin	Cable, 0.92 m, PVC	Cable, 2.00 m, PUR
	10...30 VDC	10...30 VDC	10...30 VDC	10...30 VDC
	-25...80 °C	-25...80 °C	-25...70 °C	-25...70 °C
	500 bar	500 bar	10 bar	10 bar
	—	—	—	—
	IP68	IP68	IP67	IP67
	CE, cULus, EAC	CE, cULus, EAC	EAC, CE, cULus	CE, cULus, EAC
	Page 178	Page 178	Page 178	Page 179

PNP normally open	**BES03JM** BES M05EG-PSC08B-BP00,2-GS49	**BES03NZ** BES M05ED-PSC08B-BP02-R50	
PNP normally closed			
NPN normally open	**BES0315** BES M05EG-NSC08B-BP00,2-GS49		
Dimension	Ø 5 x 42 mm	Ø 5 x 27 mm	
Style	M5x0.5	M5x0.5	
Installation	for flush mounting	for flush mounting	
Installation length from contact surface	—	—	
Range	0.8 mm	0.8 mm	
Switching frequency	3000 Hz	3000 Hz	
Housing material	Stainless steel	Stainless steel	
Surface protection	—	—	
Material sensing surface	Ceramic	Ceramic	
Connection	Cable with connector, M8x1 connector, 3-pin, 0.20 m, PUR	Cable, 2.00 m, PUR	
Operating voltage Ub	10...30 VDC	10...30 VDC	
Ambient temperature	-25...70 °C	-25...70 °C	
Pressure rating max.	10 bar	50 bar	
Magnetic field immune	—	—	
Protection degree	IP67	IP67	
Approval/Conformity	CE, cULus, EAC	cULus, CE, EAC	
Productview	Page 179	Page 179	

BES03L7 BES M05ED-PSD08B-BP02-R03	**BES03LC** BES M05ED-PSD08B-BP00,3-GS49-R03	**BES034K** BES 516-324-SA17-05	**BES03UY** BES M08EE1-PSC20B-S49G-S
	BES03LE BES M05ED-POD08B-BP00,3-GS49-R03		
			BES03Z3 BES M08EE1-NSC20B-S49G-S
Ø 5 x 27 mm	Ø 5 x 27 mm	Ø 8 x 45 mm	Ø 8 x 50 mm
M5x0.5	M5x0.5	M8x1	M8x1
for flush mounting	for flush mounting	for flush mounting	for flush mounting
—	—	—	—
0.8 mm	0.8 mm	1.2 mm	2 mm
3000 Hz	3000 Hz	1500 Hz	100 Hz
Stainless steel	Stainless steel	Stainless steel	Stainless steel
—	—	—	—
Ceramic	Ceramic	PA 12	Stainless steel (1.4404)
Cable, 2.00 m, PUR	Cable with connector, M8x1 connector, 3-pin, 0.30 m, PUR	Cable, 5.00 m, PVC	Connector, M8x1 connector, 3-pin
10...30 VDC	10...30 VDC	10...30 VDC	10...30 VDC
-25...70 °C	-25...70 °C	-25...70 °C	-25...70 °C
100 bar	100 bar	10 bar	80 bar
—	—	—	—
IP67	IP67	IP68	IP67
CE, cULus, EAC	CE, cULus, EAC	CE, EAC	CE, cULus, EAC
Page 179	Page 179	Page 179	Page 179

PNP normally open			
NPN normally open	**BES02N3** BES M08EH1-NSC20B-S04G-S	**BES02N4** BES M08EH1-NSC20B-S04G-S01	
Dimension	Ø 8 x 65 mm	Ø 8 x 65 mm	
Style	M8x1	M8x1	
Installation	for flush mounting	for flush mounting	
Installation length from contact surface	—	—	
Range	2 mm	2 mm	
Switching frequency	750 Hz	750 Hz	
Housing material	Stainless steel	Stainless steel	
Surface protection	—	coated, PTFE	
Material sensing surface	Stainless steel	Stainless steel	
Connection	Connector, M12x1 connector, 4-pin	Connector, M12x1 connector, 4-pin	
Operating voltage Ub	10...30 VDC	10...30 VDC	
Ambient temperature	-25...70 °C	-25...70 °C	
Pressure rating max.	80 bar	80 bar	
Magnetic field immune	—	—	
Protection degree	IP67	IP67	
Approval/Conformity	CE, cULus, EAC	CE, cULus, EAC	
Productview	Page 179	Page 179	

	BHS0039 BES 516-300-S289-BO-D-PU-05	BHS0058 BHS A407N-PSD15-BP02	BHS0054 BHS A404N-PSC15-S49	BHS0050 BHS A402N-PSC15-S49
	Ø 8 x 34 mm	Ø 6.5 x 31.3 mm	Ø 6.5 x 45 mm	Ø 6.5 x 55 mm
	M8x1	D6.5	D6.5	D6.5
	for flush mounting	for flush mounting	for flush mounting	for flush mounting
	—	—	—	—
	1.5 mm	1.5 mm	1.5 mm	1.5 mm
	1000 Hz	4000 Hz	4000 Hz	4000 Hz
	Stainless steel	Stainless steel	Stainless steel	Stainless steel
	—	—	—	—
	Ceramic	Ceramic	Ceramic	Ceramic
	Cable, 5.00 m, PUR	Cable, 2.00 m, PUR	Connector, M8x1 connector, 3-pin	Connector, M8x1 connector, 3-pin
	10...30 VDC	10...30 VDC	10...30 VDC	10...30 VDC
	-25...70 °C	-25...80 °C	-25...80 °C	-25...80 °C
	100 bar	500 bar	500 bar	500 bar
	—	—	—	—
	IP67	IP68	IP68	IP68
	CE, cULus, EAC	CE, cULus, EAC	CE, cULus, EAC	CE, cULus, EAC
	Page 180	Page 180	Page 180	Page 180

PNP normally open	**BHS003A** BES 516-300-S291-S4-D	**BES02NA** BES M12EI-PSC40B-S04G-S	
NPN normally open			
Normally open			
Dimension	Ø 12 x 56 mm	Ø 12 x 65 mm	
Style	M12x1	M12x1	
Installation	for flush mounting	for flush mounting	
Installation length from contact surface	—	—	
Range	1.5 mm	4 mm	
Switching frequency	2000 Hz	500 Hz	
Housing material	Stainless steel	Stainless steel	
Surface protection	—	—	
Material sensing surface	EP	Stainless steel	
Connection	Connector, M12x1 connector, 4-pin	Connector, M12x1 connector, 4-pin	
Operating voltage Ub	10...30 VDC	10...30 VDC	
Ambient temperature	-25...80 °C	-25...70 °C	
Pressure rating max.	50 bar	60 bar	
Magnetic field immune	—	—	
Protection degree	IP68	IP67	
Approval/Conformity	CE, EAC	CE, cULus, EAC	
Productview	Page 180	Page 180	

BES02NC BES M12EI-PSC40B-S04G-S01	**BES02WH** BES M12EG1-PSC60Z-S04G-S11		
			BHS0008 BES 516-200-S2/1.250“-S21
		BHS0006 BES 516-200-S2/1.025“-S5	
Ø 12 x 65 mm	Ø 12 x 60 mm	64.2 x 48 x 26.04 mm	64.2 x 48 x 31.75 mm
M12x1	M12x1	D12.7	D12.7
for flush mounting	quasi-flush	for flush mounting	for flush mounting
—	—	—	—
4 mm	6 mm	2 mm	2 mm
500 Hz	400 Hz	50 Hz	50 Hz
Stainless steel	Stainless steel	Stainless steel (1.4104) Zinc, die-cast	Stainless steel Zinc, Die casting
coated, PTFE	—	nickel plated	nickel plated
Stainless steel	Stainless steel	Ceramic	Ceramic
Connector, M12x1 connector, 4-pin	Connector, M12x1 connector, 4-pin	Connector, 7/8“-16 UN plug	Connector, 1/2“-20 UNF2A-Male
10...30 VDC	10...30 VDC	20...250 VDC/20...250 VAC	10...30 VDC
-25...70 °C	-25...70 °C	-25...70 °C	-25...70 °C
60 bar	80 bar	207 bar	207 bar
—	—	magnetic field immune (AC/DC)	magnetic field immune (AC/DC)
IP67	IP67	IP67	IP67
CE, cULus, EAC	CE, cULus, EAC	CE, cULus, EAC	CE, cULus, EAC
Page 180	Page 180	Page 178	Page 178

PNP normally open	BHS003M BES 516-300-S295/1.250“-S4		
Normally open		BHS0009 BES 516-200-S2/1.250“-S5	
Dimension	51 x 48 x 31.75 mm	64.2 x 48 x 31.75 mm	
Style	D12.7	D12.7	
Installation	for flush mounting	for flush mounting	
Installation length from contact surface	—	—	
Range	2 mm	2 mm	
Switching frequency	10 Hz	50 Hz	
Housing material	Stainless steel Zinc, Die casting	Stainless steel (1.4104) Zinc, die-cast	
Surface protection	nickel plated	nickel plated	
Material sensing surface	Ceramic	Ceramic	
Connection	Connector, M12x1 connector, 4-pin	Connector, 7/8“-16 UN plug	
Operating voltage Ub	10...30 VDC	20...250 VDC/20...250 VAC	
Ambient temperature	-25...70 °C	-25...70 °C	
Pressure rating max.	207 bar	207 bar	
Magnetic field immune	magnetic field immune (AC/DC)	magnetic field immune (AC/DC)	
Protection degree	IP67	IP67	
Approval/Conformity	CE, cULus, EAC	CE, cULus, EAC	
Productview	Page 178	Page 178	

	BHS0041 BES 516-300-S295/2.062"-S4			
		BHS000T BES 516-200-S2/2.062"-S21	BHS000U BES 516-200-S2/2.062"-S5	BHS0014 BES 516-200-S2/2.875"-S5
	51 x 48 x 52.37 mm	64.2 x 48 x 52.37 mm	64.2 x 48 x 52.37 mm	64.2 x 48 x 73.03 mm
	D12.7	D12.7	D12.7	D12.7
	for flush mounting	for flush mounting	for flush mounting	for flush mounting
	—	—	—	—
	2 mm	2 mm	2 mm	2 mm
	10 Hz	50 Hz	50 Hz	50 Hz
	Stainless steel Zinc, Die casting	Stainless steel Zinc, Die casting	Stainless steel (1.4104) Zinc, die-cast	Stainless steel Zinc, Die casting
	nickel plated	nickel plated	nickel plated	nickel plated
	Ceramic	Ceramic	Ceramic	Ceramic
	Connector, M12x1 connector, 4-pin	Connector, 1/2"-20 UNF2A-Male	Connector, 7/8"-16 UN plug	Connector, 7/8"-16 UN plug
	10...30 VDC	20...250 VDC/20...250 VAC	20...250 VDC/20...250 VAC	20...250 VDC/20...250 VAC
	-25...70 °C	-25...70 °C	-25...70 °C	-25...70 °C
	207 bar	207 bar	207 bar	207 bar
	magnetic field immune (AC/DC)	magnetic field immune (AC/DC)	magnetic field immune (AC/DC)	magnetic field immune (AC/DC)
	IP67	IP67	IP67	IP67
	CE, cULus, EAC	CE, cULus, EAC	CE, cULus, EAC	CE, cULus, EAC
	Page 178	Page 178	Page 178	Page 178

PNP normally open		BHS0030 BES 516-300-S260-S4-D	
Normally open	BHS0019 BES 516-200-S2/4.560"-S5		
Dimension	64.2 x 48 x 115.82 mm	Ø 10 x 37 mm	
Style	D12.7	D10.0	
Installation	for flush mounting	for flush mounting	
Installation length from contact surface	—	—	
Range	2 mm	1.5 mm	
Switching frequency	50 Hz	2000 Hz	
Housing material	Stainless steel (1.4104) Zinc, die-cast	Stainless steel	
Surface protection	nickel plated	—	
Material sensing surface	Ceramic	EP	
Connection	Connector, 7/8"-16 UN plug	Connector, M12x1 connector, 4-pin	
Operating voltage Ub	20...250 VDC/20...250 VAC	10...30 VDC	
Ambient temperature	-25...70 °C	-25...80 °C	
Pressure rating max.	207 bar	350 bar	
Magnetic field immune	magnetic field immune (AC/DC)	—	
Protection degree	IP67	IP68	
Approval/Conformity	CE, cULus, EAC	CE, EAC	
Productview	Page 178	Page 181	

	BHS0028 BES 516-300-S205-D-PU-03	BHS0029 BES 516-300-S205-D-PU-05	BES042M BES 516-300-S337-S4-D	BES042L BES 516-300-S338-S4-D
	Ø 12 x 37 mm	Ø 12 x 37 mm	Ø 12 x 56 mm	Ø 12 x 56 mm
	M12x1	M12x1	M12x1	M12x1
	for flush mounting	for flush mounting	for flush mounting	for flush mounting
	—	—	—	—
	1.5 mm	1.5 mm	1.5 mm	1.5 mm
	2000 Hz	2000 Hz	1000 Hz	1000 Hz
	Stainless steel	Stainless steel	Stainless steel	Stainless steel
	—	—	—	—
	EP	EP	EP	EP
	Cable, 3.00 m, PUR	Cable, 5.00 m, PUR	Connector, M12x1 connector, 4-pin	Connector, M12x1 connector, 4-pin
	10...30 VDC	10...30 VDC	10...30 VDC	10...30 VDC
	-25...80 °C	-25...80 °C	-25...80 °C	-25...80 °C
	350 bar	350 bar	350 bar	350 bar
	—	—	—	—
	IP68	IP68	IP68	IP68
	CE, EAC	CE, EAC	CE, cULus, EAC	CE, cULus, EAC
	Page 181	Page 181	Page 180	Page 181

PNP normally open	**BHS004N** BES 516-300-S321-S4-D	**BHS002H** BES 516-300-S240-D-PU-03	
Dimension	Ø 12 x 78 mm	Ø 12 x 47 mm	
Style	M12x1	M12x1	
Installation	for flush mounting	for flush mounting	
Installation length from contact surface	—	—	
Range	1.5 mm	1.5 mm	
Switching frequency	1000 Hz	2000 Hz	
Housing material	Stainless steel	Stainless steel	
Surface protection	—	—	
Material sensing surface	EP	EP	
Connection	Connector, M12x1 connector, 4-pin	Cable, 3.00 m, PUR	
Operating voltage Ub	10...30 VDC	10...30 VDC	
Ambient temperature	-25...80 °C	-25...80 °C	
Pressure rating max.	350 bar	500 bar	
Magnetic field immune	—	—	
Protection degree	IP68	IP68	
Approval/Conformity	CE, EAC	CE, cULus, EAC	
Productview	Page 181	Page 181	

	BHS002J BES 516-300-S240-D-PU-05	BHS001F BES 516-300-S135-D-PU-05	BHS0032 BES 516-300-S262-S4-D	BHS002Y BES 516-300-S249-S4-D
	Ø 12 x 47 mm	Ø 12 x 61 mm	Ø 12 x 50 mm	Ø 12 x 56 mm
	M12x1	M12x1	M12x1	M12x1
	for flush mounting	for flush mounting	for flush mounting	for flush mounting
	—	—	—	17.9 mm
	1.5 mm	1.5 mm	1.5 mm	1.5 mm
	2000 Hz	1000 Hz	2000 Hz	2000 Hz
	Stainless steel	Stainless steel	Stainless steel	Stainless steel
	—	—	—	—
	EP	EP	EP	EP
	Cable, 5.00 m, PUR	Cable, 5.00 m, PUR	Connector, M12x1 connector, 4-pin	Connector, M12x1 connector, 4-pin
	10...30 VDC	10...30 VDC	10...30 VDC	10...30 VDC
	-25...80 °C	-25...80 °C	-25...90 °C	-25...80 °C
	500 bar	500 bar	500 bar	500 bar
	—	—	—	—
	IP68	IP68	IP68	IP68
	CE, cULus, EAC	CE, cULus, EAC	CE, cULus, EAC	CE, cULus, EAC
	Page 181	Page 181	Page 181	Page 180

PNP normally open	BHS0033 BES 516-300-S265-S4-D	BHS005Y BHS B249V-PSD15-S04	
Dimension	Ø 12 x 56 mm	Ø 12 x 56 mm	
Style	M12x1	M12x1	
Installation	for flush mounting	for flush mounting	
Installation length from contact surface	14.9 mm	18 mm	
Range	1.5 mm	1.5 mm	
Switching frequency	2000 Hz	400 Hz	
Housing material	Stainless steel	Stainless steel	
Surface protection	—	—	
Material sensing surface	EP	Ceramic	
Connection	Connector, M12x1 connector, 4-pin	Connector, M12x1 connector, 4-pin	
Operating voltage Ub	10...30 VDC	10...30 VDC	
Ambient temperature	-25...80 °C	-25...120 °C	
Pressure rating max.	500 bar	500 bar	
Magnetic field immune	—	—	
Protection degree	IP68	IP68	
Approval/Conformity	CE, cULus, EAC	CE, cULus, EAC	
Productview	Page 181	Page 181	

	BHS0061 BHS B265V-PSD15-S04	BHS0021 BES 516-300-S162-S4-D	BHS001L BES 516-300-S135-S4-D	BHS005R BHS B135V-PSD15-S04
	Ø 12 x 56 mm	Ø 12 x 69 mm	Ø 12 x 78 mm	Ø 12 x 78 mm
	M12x1	M12x1	M12x1	M12x1
	for flush mounting	for flush mounting	for flush mounting	for flush mounting
	15 mm	—	—	—
	1.5 mm	1.5 mm	1.5 mm	1.5 mm
	400 Hz	2000 Hz	1000 Hz	400 Hz
	Stainless steel	Stainless steel	Stainless steel	Stainless steel
	—	—	—	—
	Ceramic	EP	EP	Ceramic
	Connector, M12x1 connector, 4-pin	Connector, M12x1 connector, 4-pin	Connector, M12x1 connector, 4-pin	Connector, M12x1 connector, 4-pin
	10...30 VDC	10...30 VDC	10...30 VDC	10...30 VDC
	-25...120 °C	-25...80 °C	-25...80 °C	-25...80 °C
	500 bar	500 bar	500 bar	500 bar
	—	—	—	—
	IP68	IP68	IP68	IP68
	CE, cULus, EAC	CE, cULus, EAC	CE, cULus, EAC	CE, cULus, EAC
	Page 182	Page 182	Page 181	Page 182

PNP normally open		BHS0022 BES 516-300-S163-S4-D	
PNP normally open/normally closed	BHS0001 BES 516-100-S45-S4-D		
Dimension	Ø 12 x 78 mm	Ø 12 x 93 mm	
Style	M12x1	M12x1	
Installation	for flush mounting	for flush mounting	
Installation length from contact surface	—	—	
Range	1.5 mm	1.5 mm	
Switching frequency	1000 Hz	1000 Hz	
Housing material	Stainless steel	Stainless steel	
Surface protection	—	—	
Material sensing surface	EP	EP	
Connection	Connector, M12x1 connector, 4-pin	Connector, M12x1 connector, 4-pin	
Operating voltage Ub	10...30 VDC	10...30 VDC	
Ambient temperature	-25...80 °C	-25...80 °C	
Pressure rating max.	500 bar	500 bar	
Magnetic field immune	—	—	
Protection degree	IP68	IP68	
Approval/Conformity	CE, cULus, EAC	CE, cULus, EAC	
Productview	Page 181	Page 182	

	BHS004C BES 516-300-S300-S4-D	BHS005U BHS B135V-PSD25-S04-003	BES02NK BES M18EI-PSC72B-S04G-S01	BES02Y1 BES M18EF1-PSC20F-S04G-S
	Ø 12 x 93 mm	Ø 12 x 78 mm	Ø 18 x 65 mm	Ø 18 x 63.5 mm
	M12x1	M12x1	M18x1	M18x1
	for flush mounting	for flush mounting	for flush mounting	non-flush
	—	—	—	—
	1.5 mm	2.5 mm	7.2 mm	20 mm
	1000 Hz	400 Hz	250 Hz	200 Hz
	Stainless steel	Stainless steel	Stainless steel	Stainless steel
	—	—	coated, PTFE	—
	EP	Ceramic	Stainless steel	Stainless steel
	Connector, M12x1 connector, 4-pin	Connector, M12x1 connector, 4-pin	Connector, M12x1 connector, 4-pin	Connector, M12x1 connector, 4-pin
	10...30 VDC	10...30 VDC	10...30 VDC	10...30 VDC
	-25...80 °C	-25...90 °C	-25...70 °C	-25...70 °C
	500 bar	500 bar	40 bar	60 bar
	—	—	—	—
	IP68	IP68	IP67	IP67
	CE, cULus, EAC	CE, cULus, EAC	CE, cULus, EAC	CE, cULus, EAC
	Page 182	Page 182	Page 182	Page 182

Do you need more details? Our Product Finder at www.balluff.com provides you with product-specific information, including technical drawings, data sheets, user guides and more for each individual product. All items are available for download.

PNP normally open	**BES02Y3** BES M18EG1-PSC10Z-S04G-S11	**BHS001N** BES 516-300-S144-S4-D	
Dimension	Ø 18 x 63.5 mm	Ø 18 x 73 mm	
Style	M18x1	M18x1	
Installation	quasi-flush	for flush mounting	
Installation length from contact surface	—	—	
Range	10 mm	1.5 mm	
Switching frequency	200 Hz	1000 Hz	
Housing material	Stainless steel	Stainless steel	
Surface protection	—	—	
Material sensing surface	Stainless steel	EP	
Connection	Connector, M12x1 connector, 4-pin	Connector, M12x1 connector, 4-pin	
Operating voltage Ub	10...30 VDC	10...30 VDC	
Ambient temperature	-25...70 °C	-25...80 °C	
Pressure rating max.	60 bar	350 bar	
Magnetic field immune	—	—	
Protection degree	IP67	IP68	
Approval/Conformity	CE, cULus, EAC	CE, EAC	
Productview	Page 182	Page 183	

	BHS004A BES 516-300-S299-S4-D	BHS0026 BES 516-300-S190-S4	BHS0027 BES 516-300-S203	
	Ø 18 x 55 mm	Ø 18 x 58 mm	Ø 18 x 61 mm	
	M18x1	M18x1	M18x1	
	for flush mounting	for flush mounting	for flush mounting	
	—	—	—	
	1.5 mm	3 mm	3 mm	
	2000 Hz	400 Hz	1000 Hz	
	Stainless steel	Stainless steel	Stainless steel	
	—	—	—	
	EP	PEEK	PEEK	
	Connector, M12x1 connector, 4-pin	Connector, M12x1 connector, 4-pin	Connector, M18x1 connector, 4-pin	
	10...30 VDC	10...30 VDC	10...30 VDC	
	-25...80 °C	-25...80 °C	-25...80 °C	
	500 bar	500 bar	500 bar	
	—	—	—	
	IP68	IP68	IP68	
	CE, EAC	CE, EAC	CE, EAC	
	Page 183	Page 183	Page 183	

PNP normally open	**BES02YF** BES M30EG1-PSC20Z-S04G-S11	**BES02YC** BES M30EE1-PSC40F-S04G-S	
NAMUR			
Dimension	Ø 30 x 63.5 mm	Ø 30 x 63.5 mm	
Style	M30x1.5	M30x1.5	
Installation	for flush mounting	non-flush	
Installation length from contact surface	—	—	
Range	20 mm	40 mm	
Switching frequency	100 Hz	100 Hz	
Housing material	Stainless steel	Stainless steel	
Surface protection	—	—	
Material sensing surface	1.4305 stainless steel	1.4305 stainless steel	
Connection	Connector, M12x1 connector, 4-pin	Connector, M12x1 connector, 4-pin	
Operating voltage Ub	10...30 VDC	10...30 VDC	
Ambient temperature	-25...70 °C	-25...70 °C	
Pressure rating max.	40 bar	40 bar	
Magnetic field immune	—	—	
Protection degree	IP67	IP67	
Approval/Conformity	CE, cULus, EAC	CE, cULus, EAC	
Productview	Page 183	Page 183	

	BHS006M BES 516-300-S331-S4-D			
	Ø 16.66 x 50 mm			
	G3/8“			
	for flush mounting			
	—			
	1.5 mm			
	2000 Hz			
	Stainless steel			
	—			
	EP			
	Connector, M12x1 connector, 4-pin			
	10...30 VDC			
	-25...90 °C			
	500 bar			
	—			
	IP68			
	CE, cULus, EAC			
	Page 183			

Do you need more details? Our Product Finder at www.balluff.com provides you with product-specific information, including technical drawings, data sheets, user guides and more for each individual product. All items are available for download.

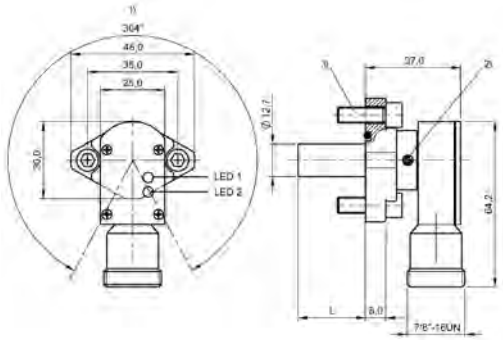

1) Housing rotatable 304°, 2) Tightening torque 1...1.5 Nm, 3) Tightening torque 16.5 Nm

BHS0006, BHS0009, BHS000U, BHS0019, BHS0014

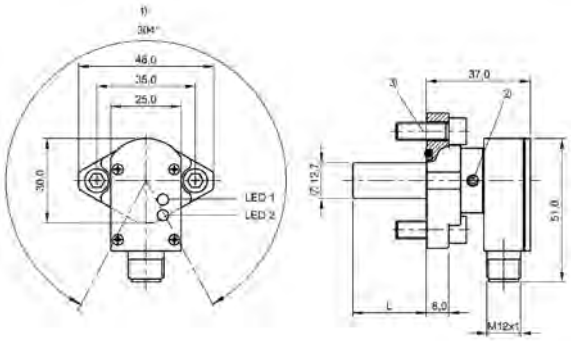

1) Housing rotatable 304°, 2) Tightening torque 1...1.5 Nm, 3) Tightening torque 16.5 Nm

BHS0041, BHS003M

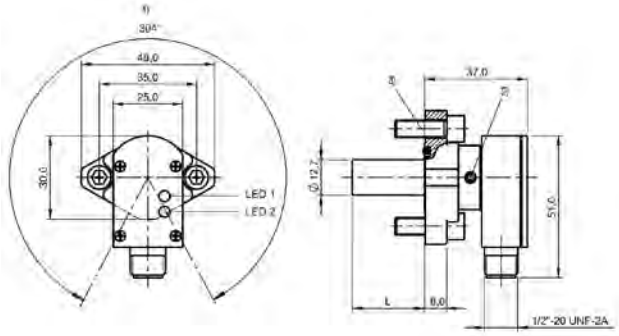

1) Housing rotatable 304°, 2) Tightening torque 1...1.5 Nm, 3) Tightening torque 16.5 Nm

BHS0008, BHS000T

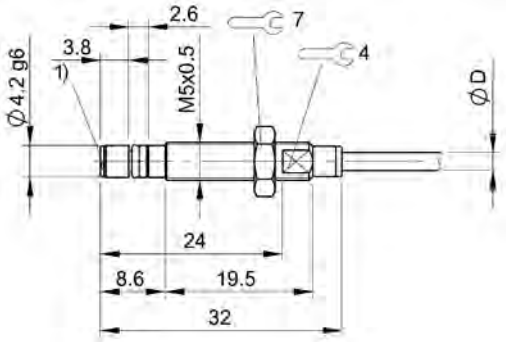

1) Sensing surface

BHS006Y, BHS006U

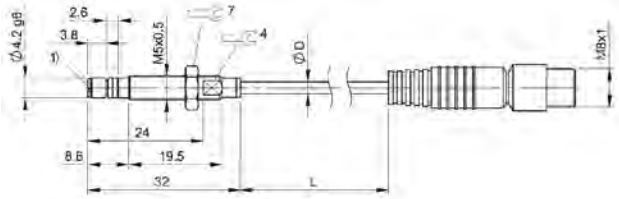

1) Sensing surface

BHS007J

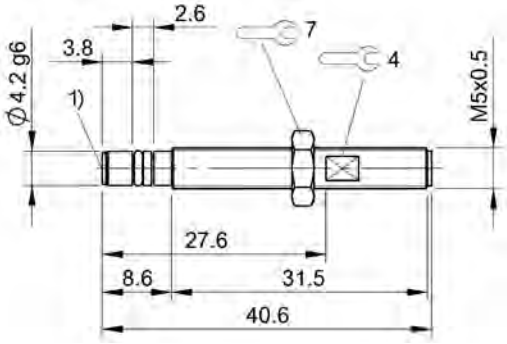

1) Sensing surface

BHS006N

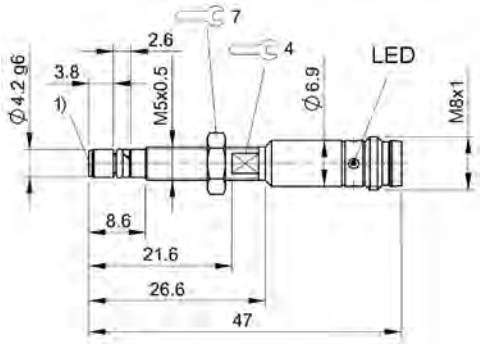

1) Sensing surface

BHS005H

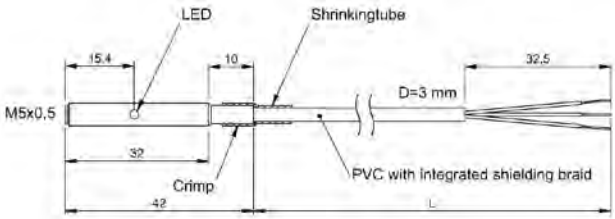

BES055Y

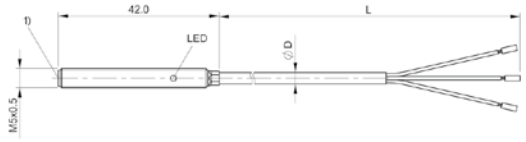

1) Sensing surface

BES03H6

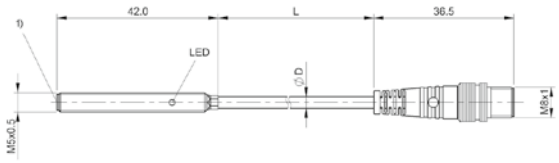

1) Sensing surface

BES0315, BES03JM

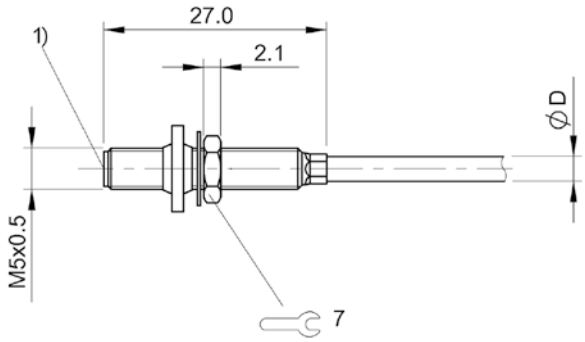

1) Sensing surface

BES03NZ

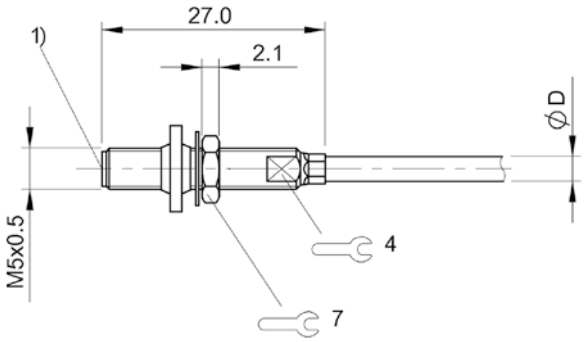

1) Sensing surface

BES03L7

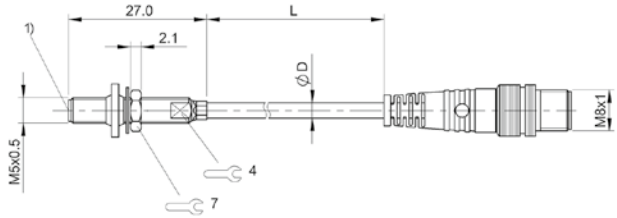

1) Sensing surface

BES03LC, BES03LE

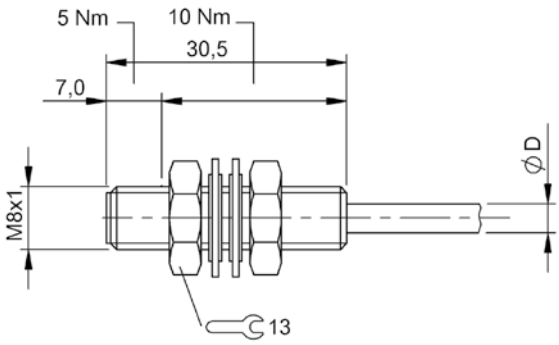

BES034K

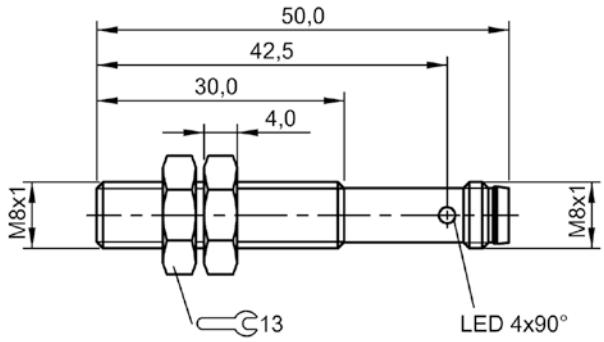

BES03UY, BES03Z3

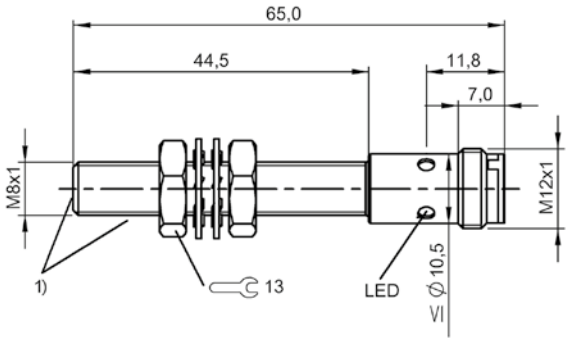

1) Pressure resistant area

BES02N3, BES02N4

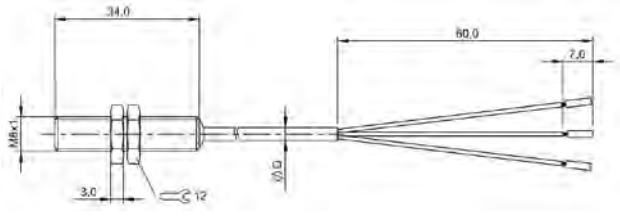

BHS0039

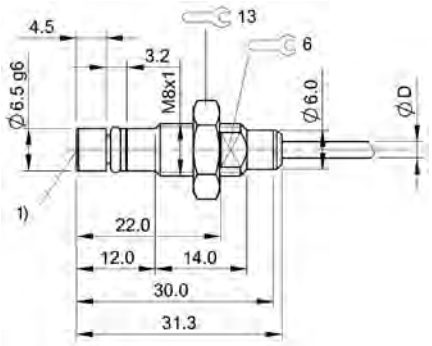

1) Sensing surface

BHS0058

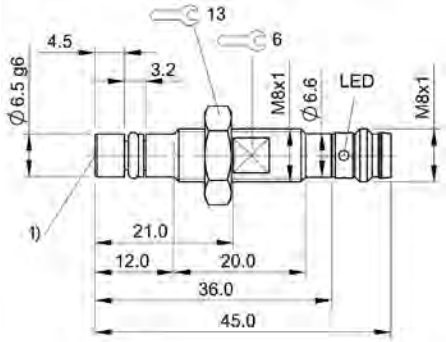

1) Sensing surface

BHS0054

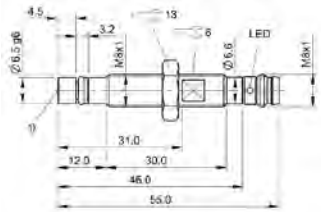

1) Sensing surface

BHS0050

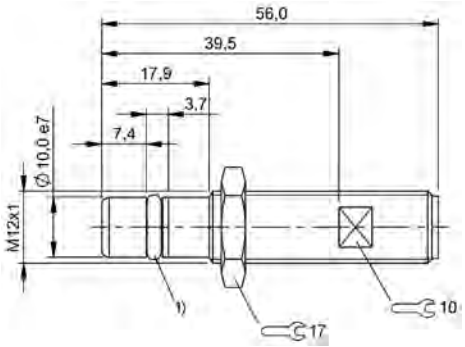

1) O-Ring with thrust ring

BHS003A, BES042M, BHS002Y

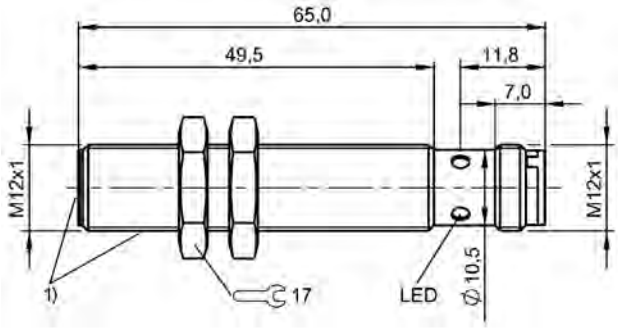

1) Pressure resistant area

BES02NA

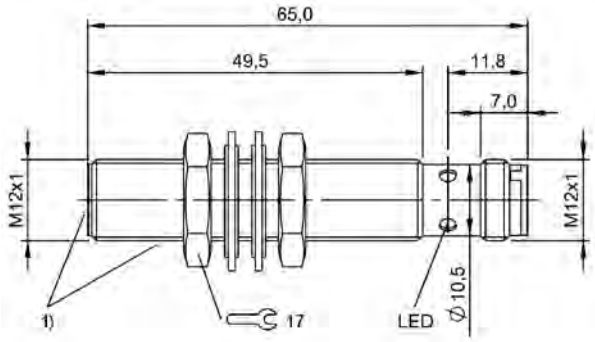

1) Pressure resistant area

BES02NC

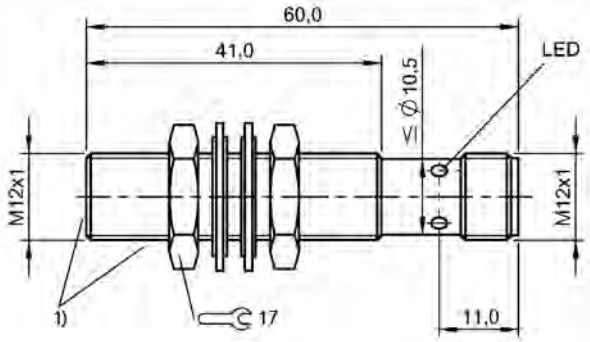

1) Pressure resistant area

BES02WH

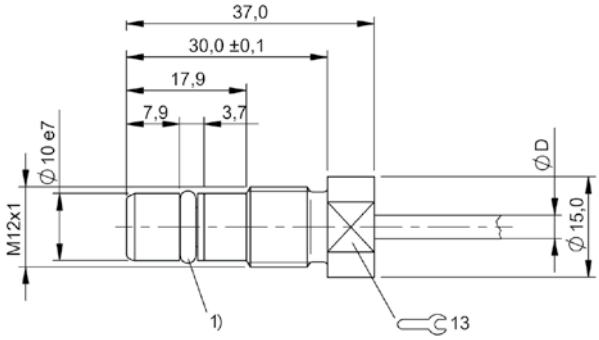

1) O-Ring with thrust ring

BHS0028, BHS0029

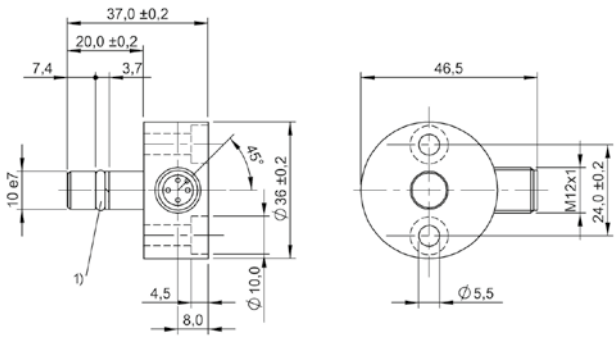

1) O-Ring with thrust ring

BHS0030

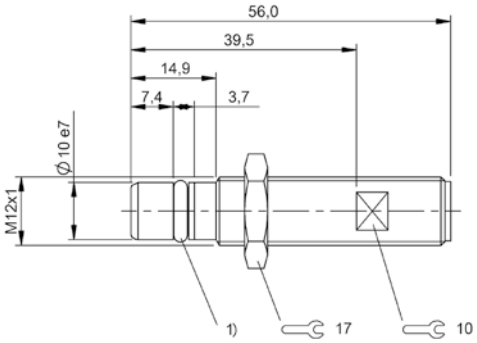

1) O-Ring with thrust ring

BES042L, BHS0033

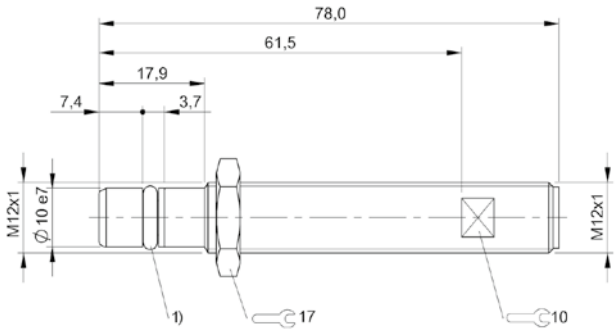

1) O-Ring with thrust ring

BHS004N, BHS001L, BHS0001

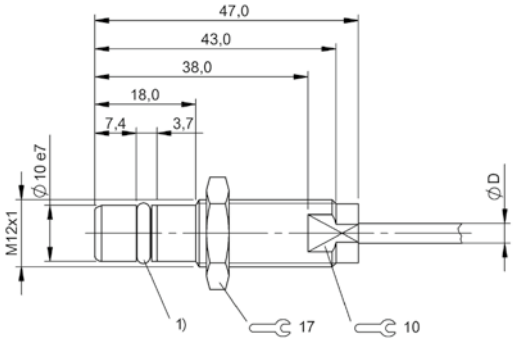

1) O-Ring with thrust ring

BHS002H, BHS002J

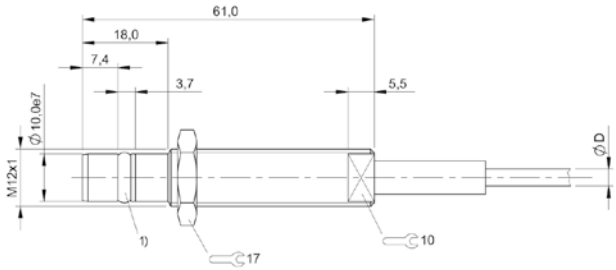

1) O-Ring with thrust ring

BHS001F

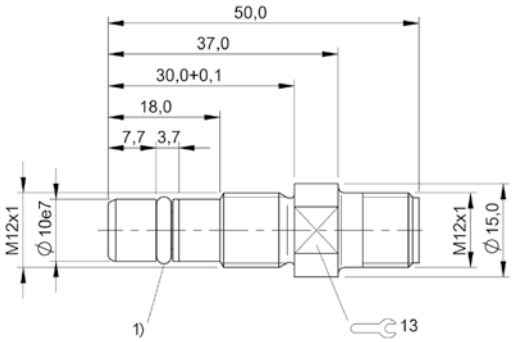

1) O-Ring with thrust ring

BHS0032

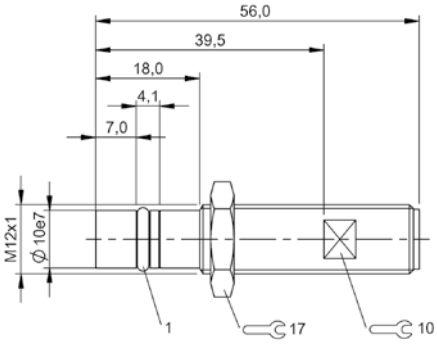

1) O-Ring with thrust ring

BHS005Y

Do you need more details? Our Product Finder at www.balluff.com provides you with product-specific information, including technical drawings, data sheets, user guides and more for each individual product. All items are available for download.

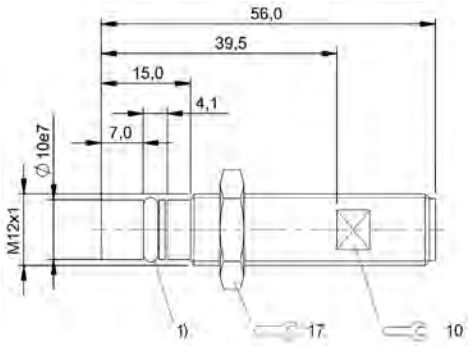

1) O-Ring with thrust ring

BHS0061

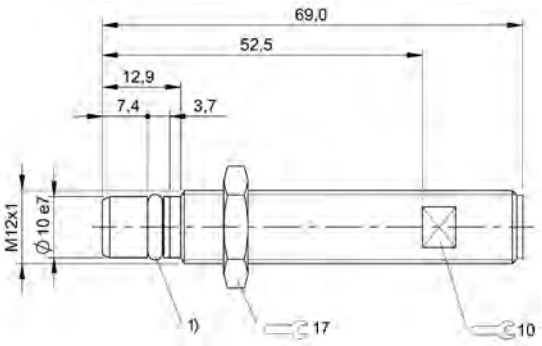

1) O-Ring with thrust ring

BHS0021

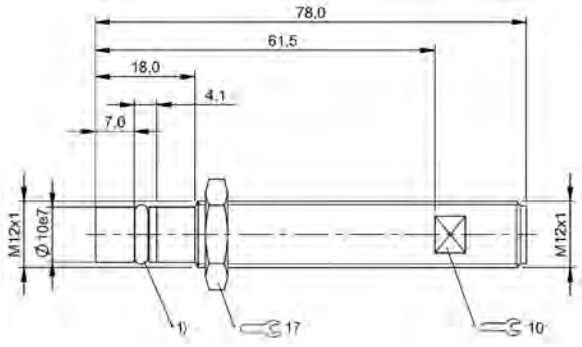

1) O-Ring with thrust ring

BHS005R, BHS005U

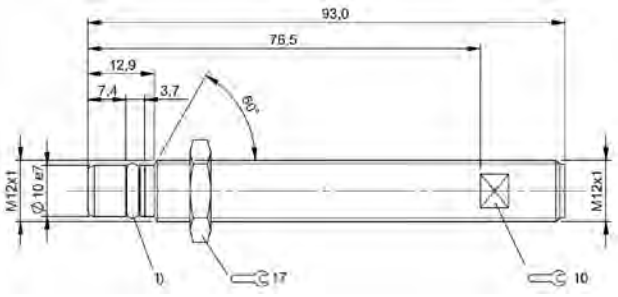

1) O-Ring with thrust ring

BHS0022

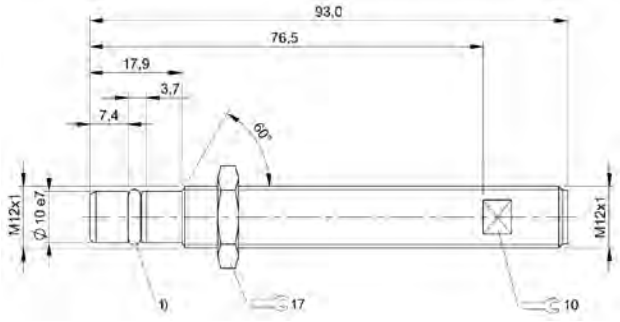

1) O-Ring with thrust ring

BHS004C

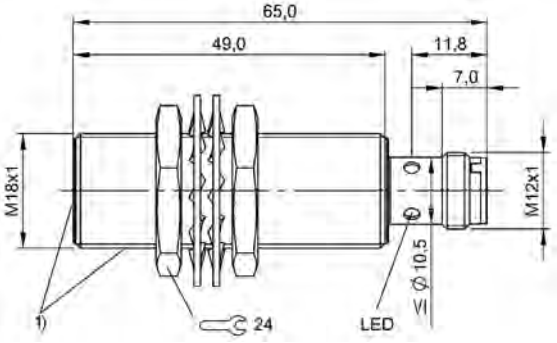

1) Pressure resistant area

BES02NK

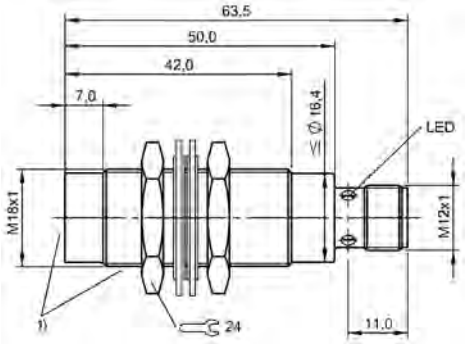

1) Pressure resistant area

BES02Y1

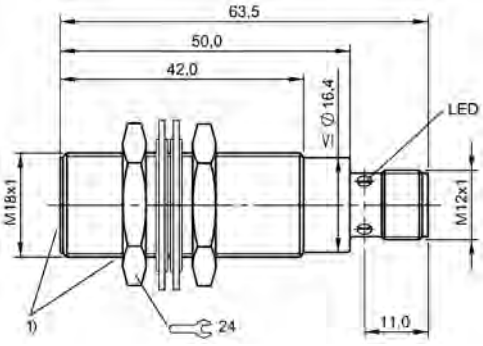

1) Pressure resistant area

BES02Y3

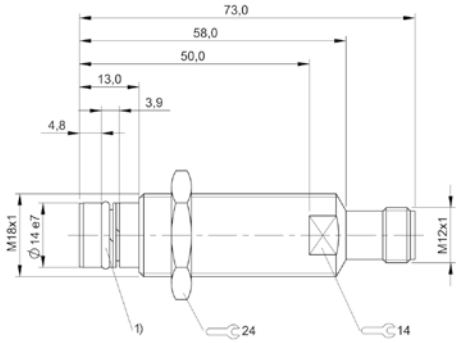

1) O-Ring with thrust ring

BHS001N

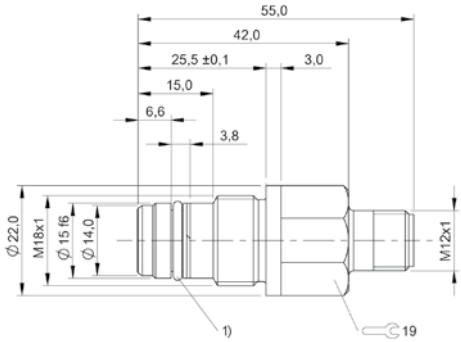

1) O-Ring with thrust ring

BHS004A

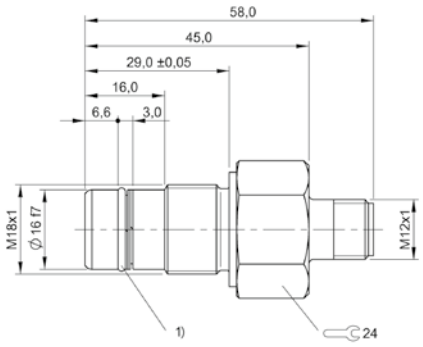

1) O-Ring with thrust ring

BHS0026

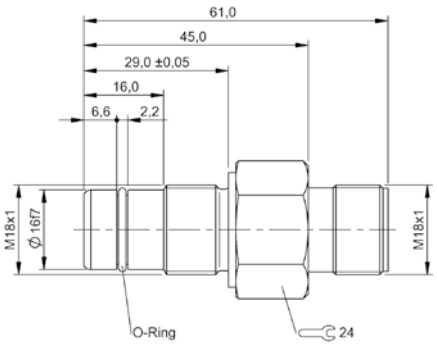

BHS0027

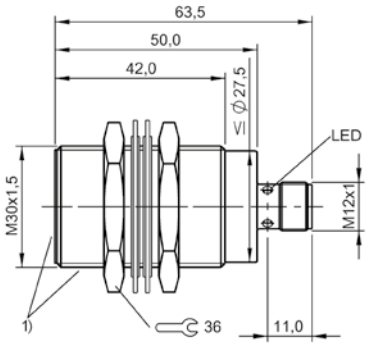

1) Pressure resistant area

BES02YF

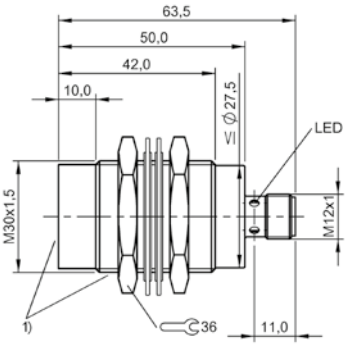

1) Pressure resistant area

BES02YC

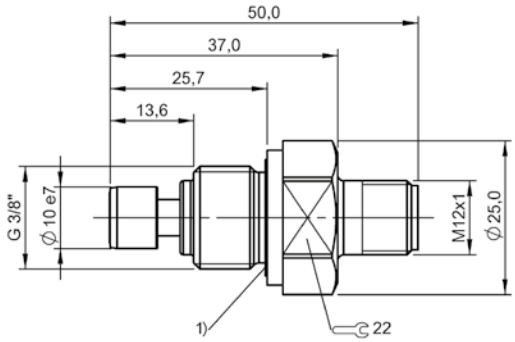

1) Sealing ring

BHS006M

PNP normally open	**BES0444** BES M12EE1-PSY20B-S04G-L01	**BES0433** BES M12EE-PSC40B-S04G-L01	
Dimension	Ø 12 x 50 mm	Ø 12 x 45 mm	
Style	M12x1	M12x1	
Installation	for flush mounting	for flush mounting	
Range	2 mm	4 mm	
Switching frequency	800 Hz	2000 Hz	
Housing material	Stainless steel (1.4571)	Stainless steel (1.4404)	
Material sensing surface	PEEK	LCP	
Connection	Connector, M12x1 connector, 4-pin	Connector, M12x1 connector, 4-pin	
Operating voltage Ub	10...30 VDC	10...30 VDC	
Ambient temperature	-40...105 °C	-25...85 °C	
Protection degree	IP68	IP68	
Approval/Conformity	CE, cULus, EAC, Ecolab, FDA compliant	CE, cULus, EAC, FDA compliant	
Productview	Page 186	Page 186	

	BES0435 BES M12EI-PSC40B-S04G-L01	BES0443 BES M12EE1-PSY40F-S04G-L01	BES0441 BES M18EE1-PSY50B-S04G-L01	BES0437 BES M18EI-PSC80B-S04G-L01	
	Ø 12 x 65 mm	Ø 12 x 54.5 mm	Ø 18 x 45 mm	Ø 18 x 65 mm	
	M12x1	M12x1	M18x1	M18x1	
	for flush mounting	non-flush	for flush mounting	for flush mounting	
	4 mm	4 mm	5 mm	8 mm	
	1000 Hz	400 Hz	500 Hz	700 Hz	
	Stainless steel (1.4404)	Stainless steel (1.4571)	Stainless steel (1.4571)	Stainless steel (1.4404)	
	LCP	PEEK	PEEK	PEEK	
	Connector, M12x1 connector, 4-pin	Connector, M12x1 connector, 4-pin	Connector, M12x1 connector, 4-pin	Connector, M12x1 connector, 4-pin	
	10...30 VDC	10...30 VDC	10...30 VDC	10...30 VDC	
	-25...85 °C	-40...105 °C	-40...105 °C	-40...85 °C	
	IP68	IP68	IP68	IP68	
	CE, cULus, EAC, Ecolab, FDA compliant	CE, cULus, EAC, Ecolab, FDA compliant	CE, cULus, EAC, Ecolab, FDA compliant	CE, cULus, EAC, Ecolab, FDA compliant	
	Page 186	Page 186	Page 186	Page 186	

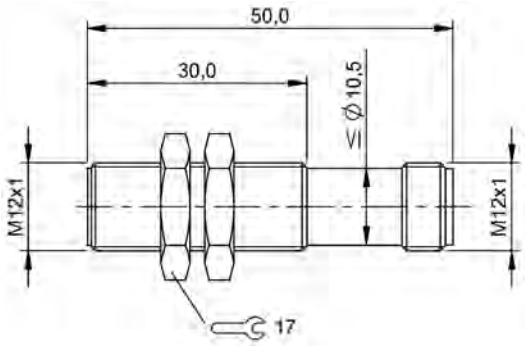

BES0444

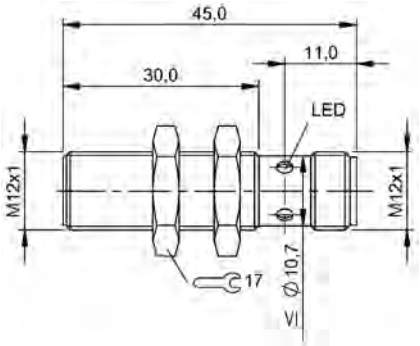

BES0433

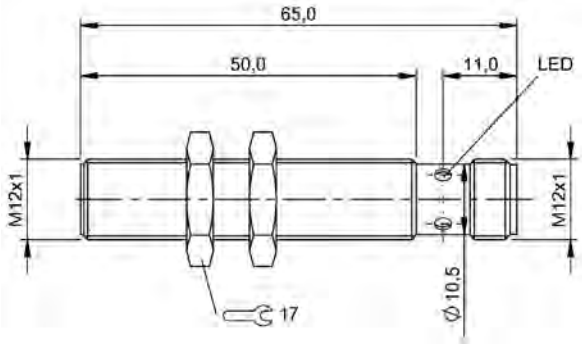

BES0435

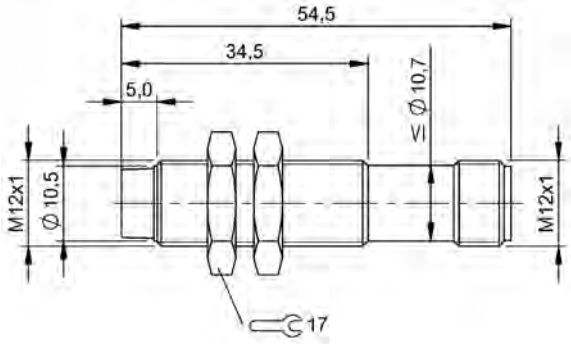

BES0443

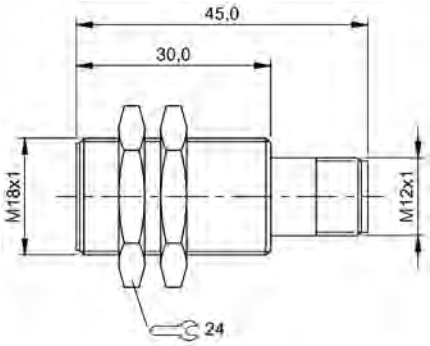

BES0441

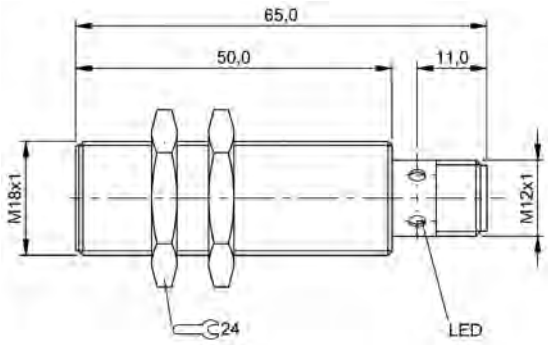

BES0437

PNP normally open	**BES02YR** BES M08EG-PSC15A-S49G-W	**BES02YT** BES M08EG1-PSC15A-S04G-W	
Dimension	Ø 8 x 49 mm	Ø 8 x 57 mm	
Style	M8x1	M8x1	
Installation	flush	flush	
Range	1.5 mm	1.5 mm	
Interface	—	—	
Switching frequency	2000 Hz	2000 Hz	
Housing material	Stainless steel (1.4301), PTFE coated	Stainless steel (1.4301), PTFE coated	
Material sensing surface	PBT/PTFE	PBT/PTFE	
Connection	Connector, M8x1-Male, 3-pin	Connector, M12x1-Male, 4-pin	
Operating voltage Ub	10...30 VDC	10...30 VDC	
Ambient temperature	-25...70 °C	-25...70 °C	
Pressure rating max.	—	—	
Magnetic field immune	magnetic field immune (AC/DC)	magnetic field immune (AC/DC)	
Ex category	—	—	
IP rating	IP67	IP67	
Approval/Conformity	CE, EAC, WEEE	CE, EAC, WEEE	
Additional features	Factor 1, Weld immune	Factor 1, Weld immune	
Productview	Page 198	Page 198	

	BES03YP BES M08MG1-PSC20A-S04G-W	BES02JZ BES M12MF1-PSC30A-S04G-W	BES02K0 BES M12MF1-PSC30A-S04G-W01	
	Ø 8 x 65 mm	Ø 12 x 50 mm	Ø 12 x 50 mm	
	M8x1	M12x1	M12x1	
	flush	flush	flush	
	2 mm	3 mm	3 mm	
	—	—	—	
	1000 Hz	2000 Hz	2000 Hz	
	Brass, PTFE coated	Brass, PTFE coated	Brass, PTFE coated	
	LCP	LCP/PTFE	Ceramic	
	Connector, M12x1-Male, 3-pin	Connector, M12x1-Male, 4-pin	Connector, M12x1-Male, 4-pin	
	10...30 VDC	10...30 VDC	10...30 VDC	
	-25...70 °C	-25...70 °C	-25...70 °C	
	—	—	—	
	magnetic field immune (AC/DC)	magnetic field immune (AC/DC)	magnetic field immune (AC/DC)	
	—	—	—	
	IP67	IP67	IP67	
	CE, EAC, cULus, WEEE	CE, cULus, EAC, WEEE	CE, cULus, EAC, WEEE	
	Factor 1, Weld immune	Factor 1, Weld immune	Weld immune, Factor 1	
	Page 198	Page 198	Page 198	

PNP normally open	BES02K4 BES M12ML-PSC30A-S04G-W01	BES05KT BES M12MI-PSC40A-S04G-W08	
Dimension	Ø 12 x 65 mm	Ø 12 x 65 mm	
Style	M12x1	M12x1	
Installation	flush	flush	
Range	3 mm	4 mm	
Interface	—	—	
Switching frequency	2000 Hz	2000 Hz	
Housing material	Brass, PTFE coated	Brass, PTFE coated	
Material sensing surface	ceramic coated	PBT	
Connection	Connector, M12x1-Male, 4-pin	Connector, M12x1-Male, 3-pin	
Operating voltage Ub	10...30 VDC	10...30 VDC	
Ambient temperature	-25...70 °C	-40...85 °C	
Pressure rating max.	—	—	
Magnetic field immune	magnetic field immune (AC/DC)	magnetic field immune (AC/DC)	
Ex category	—	—	
IP rating	IP67	IP68	
Approval/Conformity	CE, cULus, EAC, WEEE	CE, EAC, WEEE	
Additional features	Factor 1, Weld immune	Factor 1, Extended temperature range, Housing resistant to weld spatter, weld-immune (magnetic field 100kA/m)	
Productview	Page 198	Page 198	

	BES02K5 BES M12ML-PSC80E-S04G-W	BES05PR BES M18ME-PSC80A-S04G-W10	BES05PN BES M18MI-PSC80A-S04G-W09	BES05PP BES M18MI-PSC80A-S04G-W10
	Ø 12 x 65 mm	Ø 18 x 46 mm	Ø 18 x 66 mm	Ø 18 x 66 mm
	M12x1	M18x1	M18x1	M18x1
	non-flush	flush	flush	flush
	8 mm	8 mm	8 mm	8 mm
	—	—	—	—
	2000 Hz	2000 Hz	2000 Hz	2000 Hz
	Brass, PTFE coated	Brass, PTFE coated	Brass, PTFE coated	Brass, PTFE coated
	LCP/PTFE	PBT	PBT, PTFE coated	PBT
	Connector, M12x1-Male, 4-pin	Connector, M12x1-Male, 3-pin	Connector, M12x1-Male, 3-pin	Connector, M12x1-Male, 3-pin
	10...30 VDC	10...30 VDC	10...30 VDC	10...30 VDC
	-25...70 °C	-40...85 °C	-40...85 °C	-40...85 °C
	—	—	—	—
	magnetic field immune (AC/DC)	magnetic field immune (AC/DC)	magnetic field immune (AC/DC)	magnetic field immune (AC/DC)
	—	—	—	—
	IP67	IP67, IP68	IP67, IP68	IP67, IP68
	CE, cULus, EAC, WEEE	CE, EAC, cULus, WEEE	CE, EAC, cULus, WEEE	CE, EAC, cULus, WEEE
	Factor 1, Weld immune	Factor 1, Extended temperature range, Housing resistant to weld spatter	Factor 1, Extended temperature range, Housing resistant to weld spatter	Factor 1, Extended temperature range, Housing resistant to weld spatter
	Page 198	Page 199	Page 199	Page 199

PNP normally open	**BES05AL** BES M18ME-PSC12E-S04G-W08	**BES05AM** BES M18MI-PSC12E-S04G-W08	
Dimension	Ø 18 x 56 mm	Ø 18 x 76 mm	
Style	M18x1	M18x1	
Installation	non-flush	non-flush	
Range	12 mm	12 mm	
Interface	—	—	
Switching frequency	2000 Hz	2000 Hz	
Housing material	Brass, PTFE coated	Brass, PTFE coated	
Material sensing surface	PBT	PBT	
Connection	Connector, M12x1-Male, 3-pin	Connector, M12x1-Male, 3-pin	
Operating voltage Ub	10...30 VDC	10...30 VDC	
Ambient temperature	-40...85 °C	-40...85 °C	
Pressure rating max.	—	—	
Magnetic field immune	magnetic field immune (AC/DC)	magnetic field immune (AC/DC)	
Ex category	—	—	
IP rating	IP67, IP68	IP67, IP68	
Approval/Conformity	CE, EAC, cULus, WEEE	CE, EAC, cULus, WEEE	
Additional features	Factor 1, Extended temperature range, Housing resistant to weld spatter	Factor 1, Extended temperature range, Housing resistant to weld spatter	
Productview	Page 199	Page 199	

	BES02KM BES M30ML-PSC10A-S04G-W	BES02KN BES M30ML-PSC10A-S04G-W01	BES0454 BES M30MI-PSC15A-S04G-W12	BES04AH BES R01EC-PSC50A-BP00,3-GS04-W50
	Ø 30 x 65 mm	Ø 30 x 65 mm	Ø 30 x 65 mm	32 x 20 x 8 mm
	M30x1.5	M30x1.5	M30x1.5	32x20x8
	flush	flush	flush	flush
	10 mm	10 mm	15 mm	5 mm
	—	—	—	—
	600 Hz	600 Hz	750 Hz	20 Hz
	Brass, PTFE coated	Brass, PTFE coated	Brass, PTFE coated	Stainless steel
	LCP/PTFE	ceramic coated	PPS	Stainless steel
	Connector, M12x1-Male, 4-pin	Connector, M12x1-Male, 4-pin	Connector, M12x1-Male, 3-pin	Cable with connector, M12x1-Male, 4-pin, 0.30 m, PUR
	10...30 VDC	10...30 VDC	10...30 VDC	10...30 VDC
	-25...70 °C	-25...70 °C	-25...70 °C	-25...70 °C
	—	—	—	—
	magnetic field immune (AC/DC)	magnetic field immune (AC/DC)	magnetic field immune (AC/DC)	magnetic field immune (AC/DC)
	—	—	—	—
	IP67	IP67	IP67	IP67
	CE, cULus, EAC, WEEE	CE, cULus, EAC, WEEE	CE, EAC, cULus, WEEE	CE, cULus, EAC, WEEE
	Factor 1, Weld immune	Factor 1, Weld immune	Factor 1, Weld immune	Factor 1, Weld immune
	Page 199	Page 199	Page 199	Page 200

PNP normally open	**BES04RE** BES R01EC-PSC50A-BS00,3-GS04-W51	**BES049Y** BES R01EC-PSC50A-BP00,3-GS04-W51	
PNP normally open/normally closed			
Dimension	32 x 20 x 8 mm	32 x 20 x 8 mm	
Style	32x20x8	32x20x8	
Installation	flush	flush	
Range	5 mm	5 mm	
Interface	—	—	
Switching frequency	20 Hz	20 Hz	
Housing material	Stainless steel, PTFE coated	Stainless steel, PTFE coated	
Material sensing surface	Stainless steel, W51 ceramic coating	Stainless steel, W51 ceramic coating	
Connection	Cable with connector, M12x1-Male, 4-pin, 0.30 m, Silicone	Cable with connector, M12x1-Male, 4-pin, 0.30 m, PUR	
Operating voltage Ub	10...30 VDC	10...30 VDC	
Ambient temperature	-25...70 °C	-25...70 °C	
Pressure rating max.	—	—	
Magnetic field immune	magnetic field immune (AC/DC)	magnetic field immune (AC/DC)	
Ex category	—	—	
IP rating	IP67	IP67	
Approval/Conformity	CE, cULus, EAC, WEEE	CE, cULus, EAC, WEEE	
Additional features	Factor 1, Housing resistant to weld spatter, Weld immune	Factor 1, Housing resistant to weld spatter, Weld immune	
Productview	Page 200	Page 200	

	BES021P BES Q40KFU-PSC15A-S04G		**BES021T** BES Q40KFU-PSC15A-S04G-W01	**BES021U** BES Q40KFU-PSC20A-S04G
		BES022K BES Q40KFU-PAC15A-S04G		
	40 x 40 x 62 mm	40 x 40 x 62 mm	40 x 40 x 62 mm	40 x 40 x 62 mm
	40x40	40x40	40x40	40x40
	flush	flush	flush	flush
	15 mm	15 mm	15 mm	20 mm
	—	—	—	—
	400 Hz	400 Hz	400 Hz	400 Hz
	PBT	PBT	PBT, partly coated	PBT
	PBT	PBT	ceramic coated	PBT
	Connector, M12x1-Male, 4-pin	Connector, M12x1-Male, 4-pin	Connector, M12x1-Male, 4-pin	Connector, M12x1-Male, 4-pin
	10...30 VDC	10...30 VDC	10...30 VDC	10...30 VDC
	-25...70 °C	-25...70 °C	-25...70 °C	-25...70 °C
	—	—	—	—
	magnetic field immune (AC/DC)	magnetic field immune (AC/DC)	magnetic field immune (AC/DC)	magnetic field immune (AC/DC)
	—	—	—	—
	IP67	IP67	IP67	IP67
	CE, cULus, EAC, WEEE	CE, cULus, EAC, WEEE	CE, cULus, EAC, WEEE	CE, cULus, EAC, WEEE
	Factor 1, Weld immune	Factor 1	Factor 1, Weld immune	Factor 1
	Page 200	Page 200	Page 200	Page 200

PNP normally open		BES0222 BES Q40KFU-PSC35Z-S04G-011	
PNP normally open/normally closed	BES0457 BES Q40KFU-PAC20A-S04G-W01		
Dimension	40 x 40 x 62 mm	40 x 40 x 62 mm	
Style	40x40	40x40	
Installation	flush	flush on one side	
Range	20 mm	35 mm	
Interface	—	—	
Switching frequency	400 Hz	250 Hz	
Housing material	PBT, partly coated	PBT	
Material sensing surface	ceramic coated	PBT	
Connection	Connector, M12x1-Male, 4-pin	Connector, M12x1-Male, 4-pin	
Operating voltage Ub	10...30 VDC	10...30 VDC	
Ambient temperature	-25...70 °C	-10...60 °C	
Pressure rating max.	—	—	
Magnetic field immune	magnetic field immune (AC/DC)	magnetic field immune (AC/DC)	
Ex category	—	—	
IP rating	IP67	IP67	
Approval/Conformity	CE, cULus, EAC, WEEE	CE, cULus, EAC, WEEE	
Additional features	Factor 1	Factor 1	
Productview	Page 200	Page 200	

			BES0223 BES Q40KFU-PSC40E-S04G	
	BES021H BES Q40KFU-PAC35E-S04G	**BES021K** BES Q40KFU-PAC35E-S04G-W01		**BES021M** BES Q40KFU-PAC40E-S04G
	40 x 40 x 62 mm	40 x 40 x 62 mm	40 x 40 x 62 mm	40 x 40 x 62 mm
	40x40	40x40	40x40	40x40
	non-flush	non-flush	non-flush	non-flush
	35 mm	35 mm	40 mm	40 mm
	—	—	—	—
	250 Hz	250 Hz	100 Hz	100 Hz
	PBT	PBT, partly coated	PBT	PBT
	PBT	ceramic coated	PBT	PBT
	Connector, M12x1-Male, 4-pin	Connector, M12x1-Male, 4-pin	Connector, M12x1-Male, 4-pin	Connector, M12x1-Male, 4-pin
	10...30 VDC	10...30 VDC	10...30 VDC	10...30 VDC
	-10...70 °C	-10...70 °C	-10...70 °C	-10...70 °C
	—	—	—	—
	magnetic field immune (AC/DC)	magnetic field immune (AC/DC)	magnetic field immune (AC/DC)	magnetic field immune (AC/DC)
	—	—	—	—
	IP67	IP67	IP67	IP67
	CE, cULus, EAC, WEEE	CE, cULus, EAC, WEEE	CE, cULus, EAC, WEEE	CE, cULus, EAC, WEEE
	Factor 1	Factor 1, Weld immune	Factor 1	Factor 1
	Page 200	Page 200	Page 200	Page 200

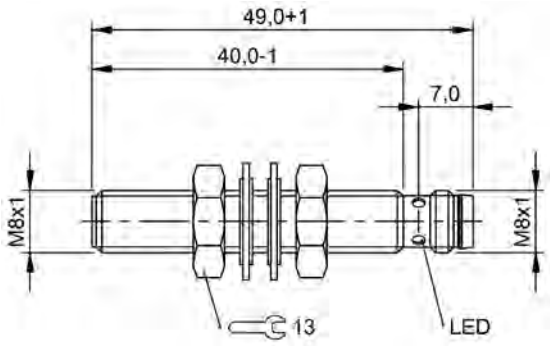

BES02YR

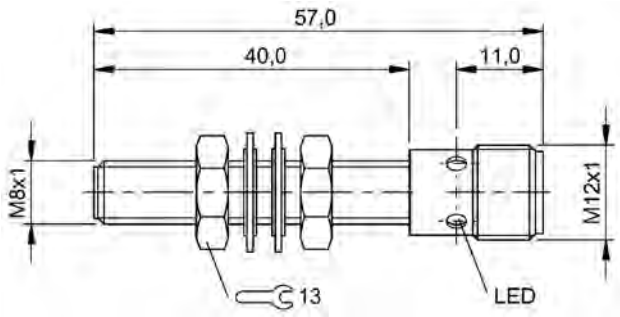

BES02YT

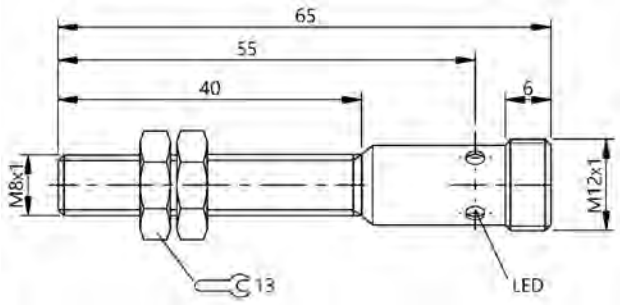

BES03YP

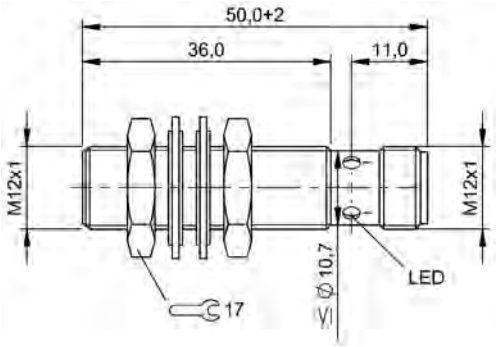

BES02JZ, BES02K0

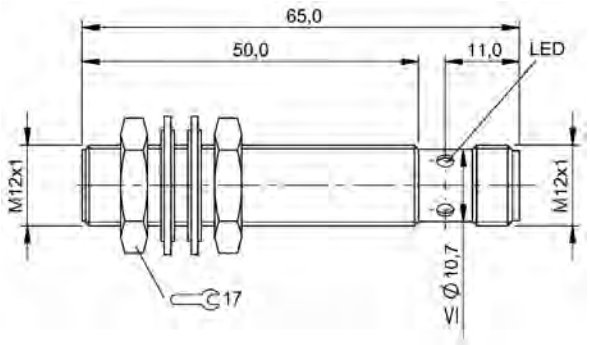

BES02K4

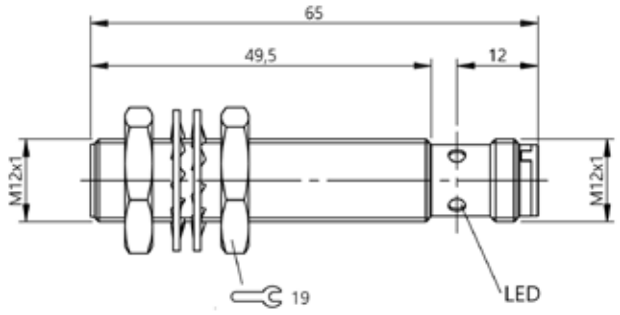

BES05KT

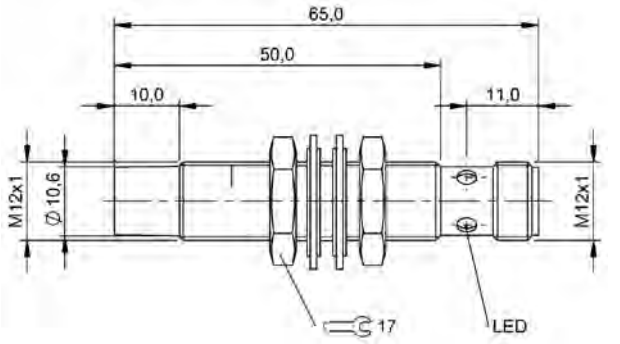

BES02K5

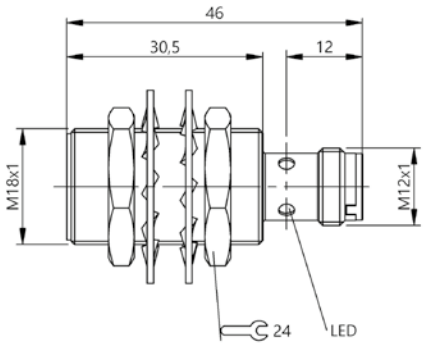

BES05PR

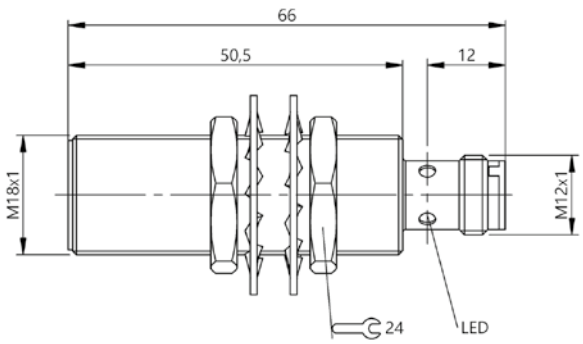

BES05PN, BES05PP

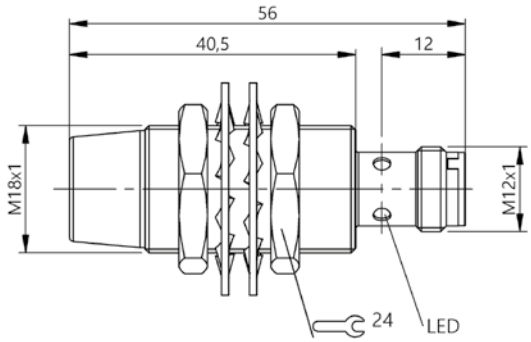

BES05AL

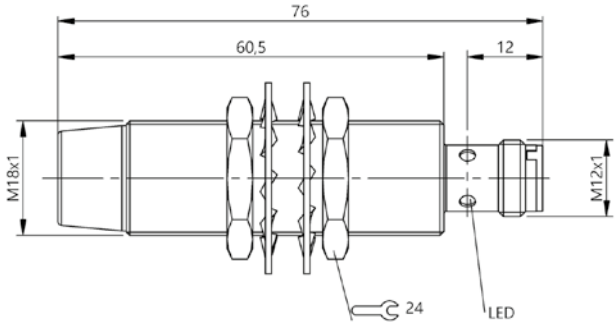

BES05AM

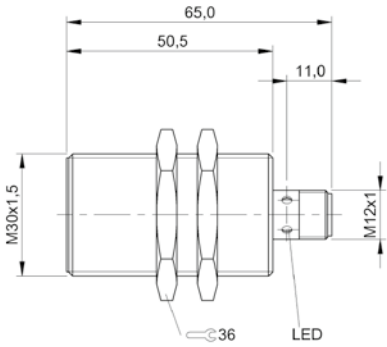

BES02KM, BES02KN

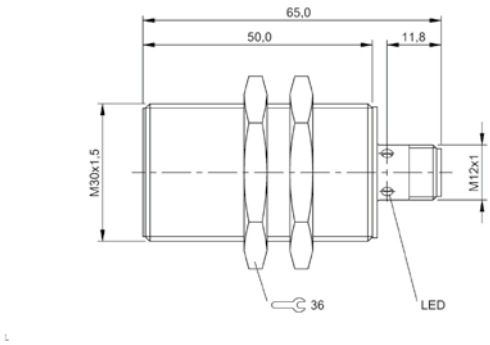

BES0454

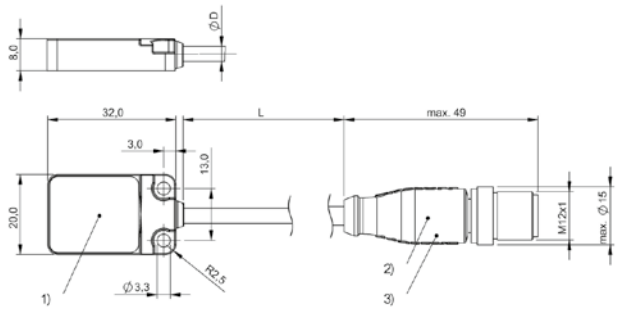

1) Sensing surface, 2) LED yellow, 3) LED green

BES04AH

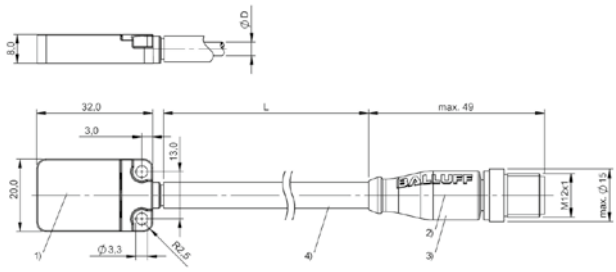

1) Sensing surface, 2) LED green, 3) LED yellow, 4) Silicon tube D=7mm

BES049Y

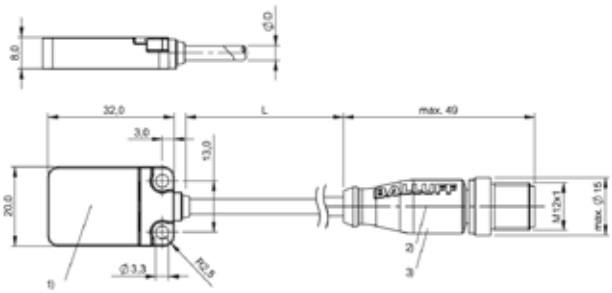

1) Sensing surface, 2) LED green, 3) LED yellow

BES04RE

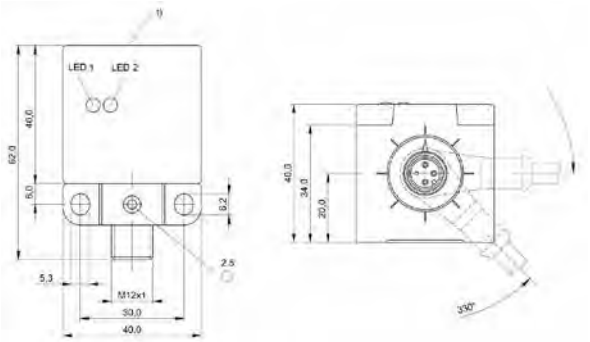

1) Sensing surface

BES021P, BES022K, BES021T, BES021H, BES021K, BES0223, BES021M

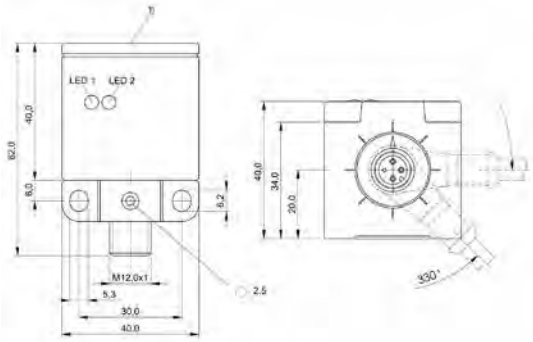

1) Sensing surface

BES021U, BES0457

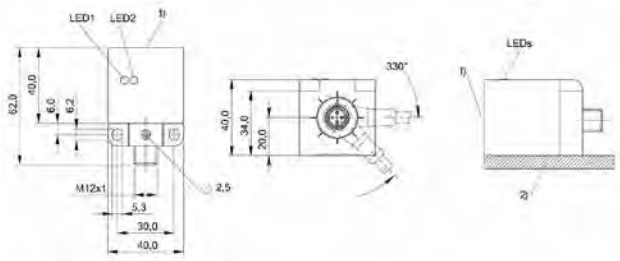

1) Sensing surface, 2) Metal plate

BES0222

PNP normally open	**BES02YZ** BES M08EG1-PSC15S-S04G-S	**BES02N5** BES M08EH1-PSC20B-S04G-S	
Dimension	Ø 8 x 64.5 mm	Ø 8 x 65 mm	
Style	M8x1	M8x1	
Installation	for flush mounting	for flush mounting	
Range	1.5 mm	2 mm	
Switching frequency	20 Hz	750 Hz	
Housing material	Stainless steel	Stainless steel	
Surface protection	—	—	
Material sensing surface	Stainless steel	Stainless steel	
Connection	Connector, M12x1 connector, 4-pin	Connector, M12x1 connector, 4-pin	
Operating voltage Ub	10...30 VDC	10...30 VDC	
Ambient temperature	-25...70 °C	-25...70 °C	
Magnetic field immune	—	—	
Protection degree	IP67	IP67	
Approval/Conformity	CE, cULus, EAC	CE, cULus, EAC	
Additional features	—	—	
Productview	Page 208	Page 208	

	BES02N6 BES M08EH1-PSC20B-S04G-S01	BES02Z3 BES M12EG1-PSC20S-S04G-S	BES02Z2 BES M12EG1-PSC20N-S04G-S	BES04Z5 BES M12EI-PSC40A-S04G-S
	Ø 8 x 65 mm	Ø 12 x 65 mm	Ø 12 x 65 mm	Ø 12 x 65 mm
	M8x1	M12x1	M12x1	M12x1
	for flush mounting	for flush mounting	for flush mounting	for flush mounting
	2 mm	2 mm	2 mm	4 mm
	750 Hz	50 Hz	50 Hz	80 Hz
	Stainless steel	Stainless steel	Stainless steel	Stainless steel
	coated, PTFE	—	—	—
	Stainless steel, coated	Stainless steel	Stainless steel	Stainless steel
	Connector, M12x1 connector, 4-pin	Connector, M12x1 connector, 4-pin	Connector, M12x1 connector, 4-pin	Connector, M12x1 connector, 4-pin
	10...30 VDC	10...30 VDC	10...30 VDC	10...30 VDC
	-25...70 °C	-25...70 °C	-25...70 °C	-25...70 °C
	—	—	—	magnetic field immune (AC/DC)
	IP67	IP67	IP67	IP67
	CE, cULus, EAC	CE, cULus, EAC	CE, cULus, EAC	CE, cULus, EAC
	Housing resistant to weld spatter	—	—	Factor 1, Weld immune
	Page 208	Page 208	Page 208	Page 208

PNP normally open	**BES0567** BES M12EI-PSC40A-S04G-S02	**BES0510** BES M12EI-PSC40S-S04G-S	
Dimension	Ø 12 x 65 mm	Ø 12 x 65 mm	
Style	M12x1	M12x1	
Installation	for flush mounting	for flush mounting	
Range	4 mm	4 mm	
Switching frequency	80 Hz	70 Hz	
Housing material	Stainless steel	Stainless steel	
Surface protection	weld spatter resistant, coated	—	
Material sensing surface	Stainless steel, coated	Stainless steel	
Connection	Connector, M12x1 connector, 4-pin	Connector, M12x1 connector, 4-pin	
Operating voltage Ub	10...30 VDC	10...30 VDC	
Ambient temperature	-25...70 °C	-25...70 °C	
Magnetic field immune	magnetic field immune (AC/DC)	magnetic field immune (AC/DC)	
Protection degree	IP67	IP67	
Approval/Conformity	CE, cULus, EAC	CE, cULus, EAC	
Additional features	Factor 1, Weld immune, Housing resistant to weld spatter	Damping: Steel	
Productview	Page 208	Page 208	

	BES0511 BES M12EI-PSC40N-S04G-S	BES02Z9 BES M18EG1-PSC50S-S04G-S	BES02Z8 BES M18EG1-PSC50N-S04G-S	BES05K7 BES M18EG1-PSC80A-S04G-S
	Ø 12 x 65 mm	Ø 18 x 66 mm	Ø 18 x 66 mm	Ø 18 x 56 mm
	M12x1	M18x1	M18x1	M18x1
	for flush mounting	for flush mounting	for flush mounting	for flush mounting
	4 mm	5 mm	5 mm	8 mm
	70 Hz	15 Hz	15 Hz	110 Hz
	Stainless steel	Stainless steel	Stainless steel	Stainless steel
	—	—	—	—
	Stainless steel	Stainless steel	Stainless steel	Stainless steel
	Connector, M12x1 connector, 4-pin	Connector, M12x1 connector, 4-pin	Connector, M12x1 connector, 4-pin	Connector, M12x1 connector, 3-pin
	10...30 VDC	10...30 VDC	10...30 VDC	10...30 VDC
	-25...70 °C	-25...70 °C	-25...70 °C	-25...70 °C
	magnetic field immune (AC/DC)	—	—	magnetic field immune (AC/DC)
	IP67	IP67	IP67	IP68
	CE, cULus, EAC	CE, cULus, EAC	CE, cULus, EAC	CE, cULus, EAC
	Damping: Alloys	—	—	Factor 1
	Page 208	Page 208	Page 208	Page 208

PNP normally open	**BES05NC** BES M18EG1-PSC80A-S04G-S02	**BES05K8** BES M18EG1-PSC80S-S04G-S	
Dimension	Ø 18 x 56 mm	Ø 18 x 56 mm	
Style	M18x1	M18x1	
Installation	for flush mounting	for flush mounting	
Range	8 mm	8 mm	
Switching frequency	110 Hz	110 Hz	
Housing material	Stainless steel	Stainless steel	
Surface protection	weld spatter resistant, coated	—	
Material sensing surface	Stainless steel, coated	Stainless steel	
Connection	Connector, M12x1 connector, 3-pin	Connector, M12x1 connector, 3-pin	
Operating voltage Ub	10...30 VDC	10...30 VDC	
Ambient temperature	-25...70 °C	-25...70 °C	
Magnetic field immune	magnetic field immune (AC/DC)	magnetic field immune (AC/DC)	
Protection degree	IP68	IP68	
Approval/Conformity	CE, cULus, EAC	CE, cULus, EAC	
Additional features	Factor 1	Damping: Steel	
Productview	Page 209	Page 208	

	BES05K9 BES M18EG1-PSC80N-S04G-S	BES02ZJ BES M30EG1-PSC80S-S04G-S	BES02ZH BES M30EG1-PSC80N-S04G-S	
	Ø 18 x 56 mm	Ø 30 x 66 mm	Ø 30 x 66 mm	
	M18x1	M30x1.5	M30x1.5	
	for flush mounting	for flush mounting	for flush mounting	
	8 mm	8 mm	8 mm	
	110 Hz	15 Hz	15 Hz	
	Stainless steel	Stainless steel	Stainless steel	
	—	—	—	
	Stainless steel	Stainless steel	Stainless steel	
	Connector, M12x1 connector, 3-pin	Connector, M12x1 connector, 4-pin	Connector, M12x1 connector, 4-pin	
	10...30 VDC	10...30 VDC	10...30 VDC	
	-25...70 °C	-25...70 °C	-25...70 °C	
	magnetic field immune (AC/DC)	—	—	
	IP68	IP67	IP67	
	CE, cULus, EAC	CE, cULus, EAC	CE, cULus, EAC	
	Damping: Alloys	—	—	
	Page 208	Page 209	Page 209	

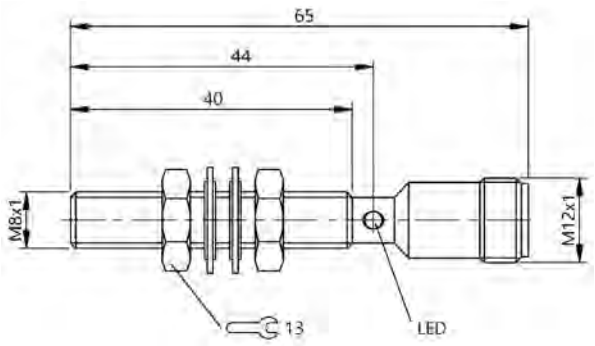

BES02YZ

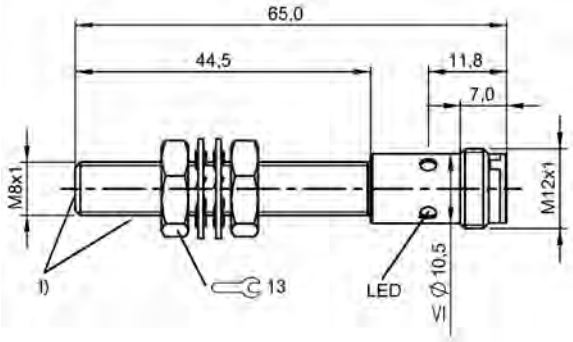

1) Range of compressive strength

BES02N5, BES02N6

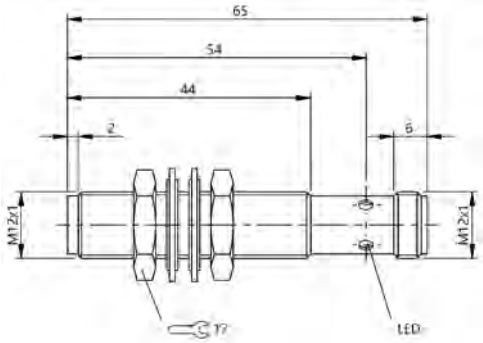

BES02Z3, BES02Z2

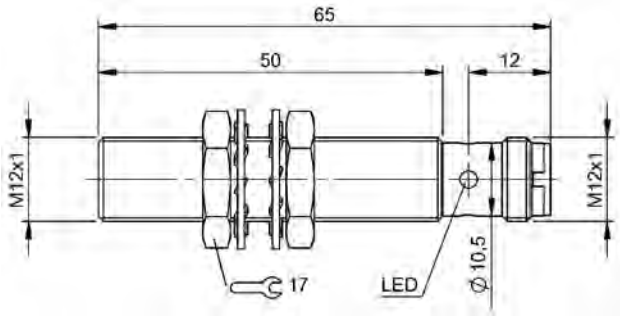

BES0510, BES0511

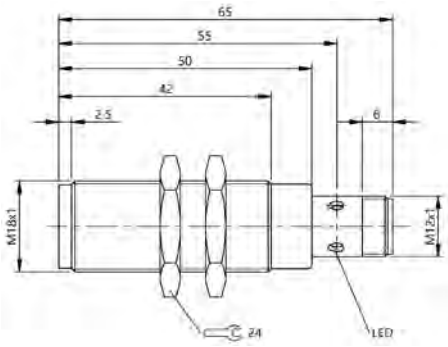

BES02Z9, BES02Z8

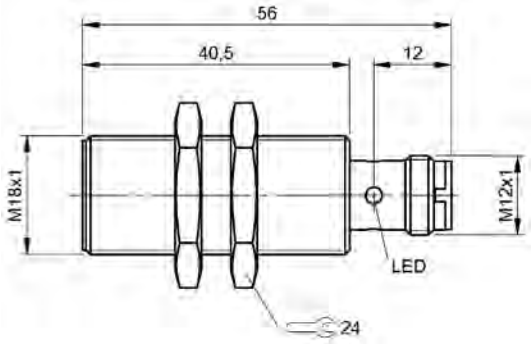

BES05K8, BES05K9

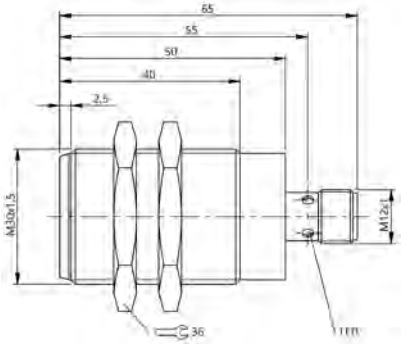

BES02ZJ

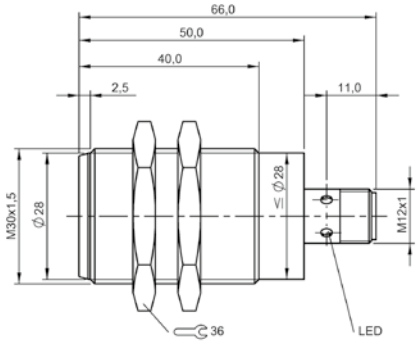

BES02ZH

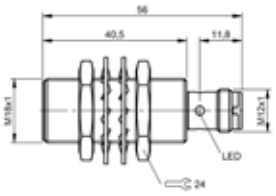

BES05NC

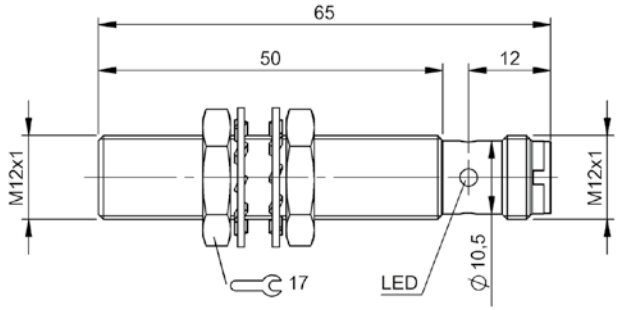

BES04Z5, BES0567

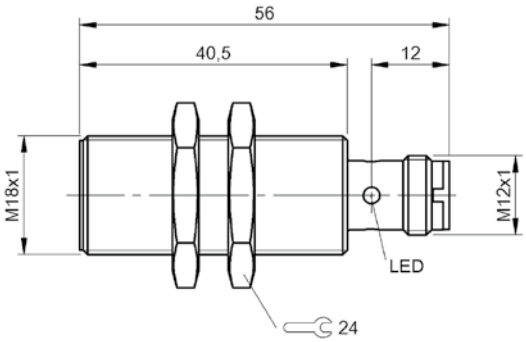

BES05K7

PNP normally open	BES02J5 BES 516-325-S4-CW	
Dimension	Ø 12 x 61 mm	
Style	M12x1	
Installation	for flush mounting	
Range	2 mm	
Switching frequency	1000 Hz	
Housing material	Stainless steel	
Surface protection	coated, PTFE	
Material sensing surface	PTFE	
Connection	Connector, M12x1 connector, 4-pin	
Operating voltage Ub	10...30 VDC	
Ambient temperature	-25...70 °C	
Magnetic field immune	magnetic field immune (AC/DC)	
Protection degree	IP67	
Approval/Conformity	cULus, CE, EAC	
Productview	Page 214	

	BES02JM BES 516-356-S4-CW	BES02J9 BES 516-326-S4-CW	BES02JH BES 516-327-S4-CW
	Ø 12 x 61 mm	Ø 18 x 65 mm	Ø 30 x 65 mm
	M12x1	M18x1	M30x1.5
	non-flush	for flush mounting	for flush mounting
	4 mm	5 mm	10 mm
	1000 Hz	500 Hz	100 Hz
	Stainless steel	Brass	Brass
	coated, PTFE	coated, PTFE	coated, PTFE
	PTFE	PTFE	PTFE
	Connector, M12x1 connector, 4-pin	Connector, M12x1 connector, 4-pin	Connector, M12x1 connector, 4-pin
	10...30 VDC	10...30 VDC	10...30 VDC
	-25...70 °C	-25...70 °C	-25...70 °C
	magnetic field immune (AC/DC)	magnetic field immune (AC/DC)	magnetic field immune (AC/DC)
	IP67	IP67	IP67
	cULus, CE, EAC	cULus, CE, EAC	CE, cULus, EAC
	Page 214	Page 214	Page 214

PNP normally open	**BES0481** BES R01ZC-PSC50B-BZ03-V02	
Dimension	32 x 20 x 8 mm	
Style	block style	
Installation	for flush mounting	
Range	5 mm	
Switching frequency	100 Hz	
Housing material	Zinc, die-cast	
Surface protection	—	
Material sensing surface	PA 12	
Connection	Cable, 3.00 m, TPU	
Operating voltage Ub	10...30 VDC	
Ambient temperature	-25...70 °C	
Magnetic field immune	magnetic field immune (AC/DC)	
Protection degree	IP67	
Approval/Conformity	CE, cULus, EAC	
Productview	Page 214	

	BES048J BES R01ZC-PSC50B-BZ00,2-GS04-V02	BES0493 BES R01ZC-PSC50B-BZ00,2-GS49-V02	BES048W BES R01ZC-PSC50B-BZ00,5-GS04-V02
	32 x 20 x 8 mm	32 x 20 x 8 mm	32 x 20 x 8 mm
	block style	block style	block style
	for flush mounting	for flush mounting	for flush mounting
	5 mm	5 mm	5 mm
	100 Hz	100 Hz	100 Hz
	Zinc, die-cast	Zinc, die-cast	Zinc, die-cast
	—	—	—
	PA 12	PA 12	PA 12
	Cable with connector, M12x1 connector, 4-pin, 0.20 m, TPU	Cable with connector, M8x1 connector, 3-pin, 0.20 m, TPU	Cable with connector, M12x1 connector, 4-pin, 0.50 m, TPU
	10...30 VDC	10...30 VDC	10...30 VDC
	-25...70 °C	-25...70 °C	-25...70 °C
	magnetic field immune (AC/DC)	magnetic field immune (AC/DC)	magnetic field immune (AC/DC)
	IP67	IP67	IP67
	CE, cULus, EAC	CE, cULus, EAC	CE, cULus, EAC
	Page 214	Page 214	Page 214

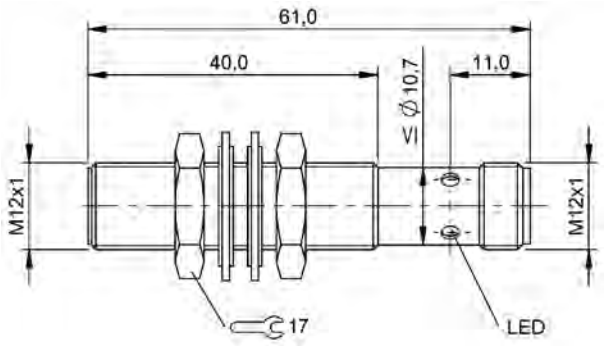

BES02J5

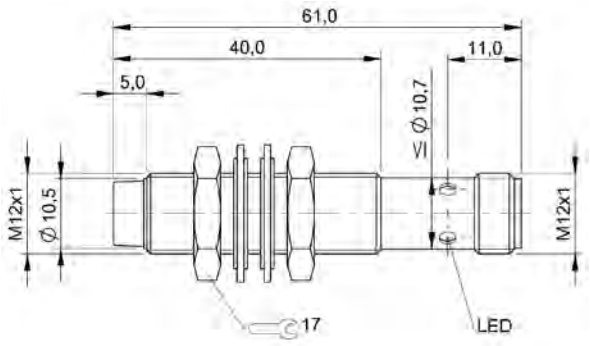

BES02JM

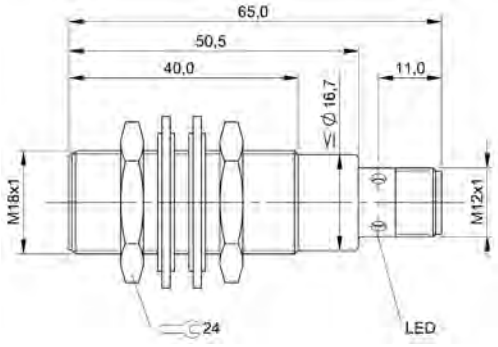

BES02J9

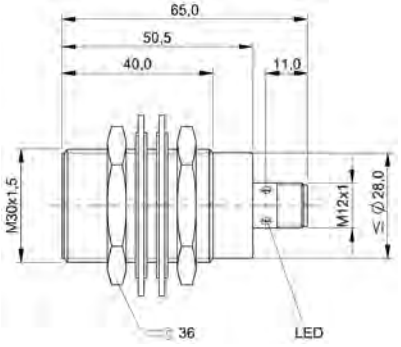

BES02JH

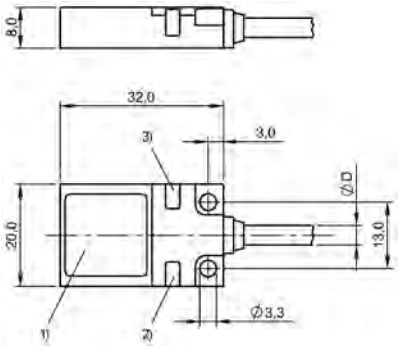

1) Sensing surface, 2) LED green, 3) LED yellow

BES0481

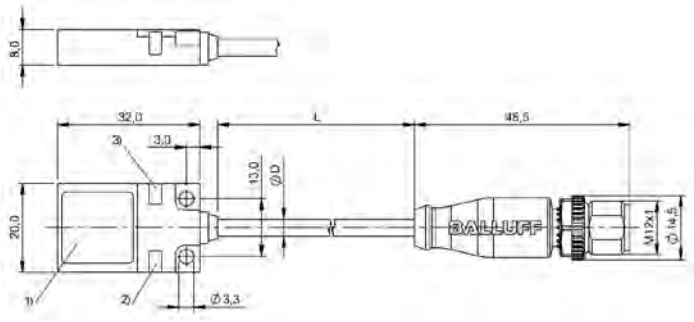

1) Sensing surface, 2) LED green, 3) LED yellow

BES048J, BES048W

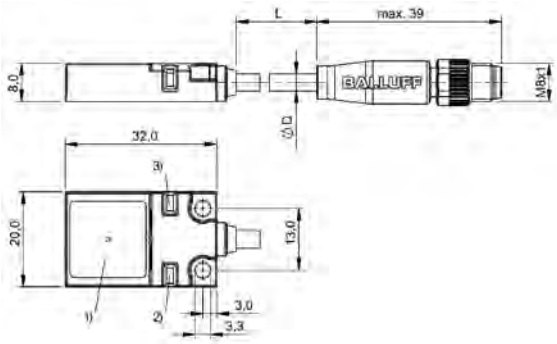

1) Sensing surface, 2) LED green, 3) LED yellow

BES0493

PNP normally open	**BES02PU** BES M08MH1-PSC20B-S04G-101	**BES02PW** BES M08MH1-PSC30B-S04G-101	
Dimension	Ø 8 x 65 mm	Ø 8 x 66 mm	
Style	M8x1	M8x1	
Installation	for flush mounting	quasi-flush	
Range	2 mm	3 mm	
Switching frequency	700 Hz	1000 Hz	
Housing material	Brass	Brass	
Surface protection	nickel plated	Chrome-plated	
Material sensing surface	ceramic coated	ceramic coated	
Connection	Connector, M12x1 connector, 4-pin	Connector, M12x1 connector, 4-pin	
Operating voltage Ub	12...30 VDC	10...30 VDC	
Ambient temperature	-25...70 °C	-25...70 °C	
Magnetic field immune	—	—	
Protection degree	IP67	IP67	
Approval/Conformity	CE, cULus, EAC	CE, EAC	
Productview	Page 220	Page 220	

	BES056A BES M12EI-PSC40B-S04G-S03	BES02KC BES M18MI-PSC70B-S04G-W	BES056C BES M18EI-PSC72B-S04G-S03	
	Ø 12 x 65 mm	Ø 18 x 65 mm	Ø 18 x 65 mm	
	M12x1	M18x1	M18x1	
	for flush mounting	for flush mounting	for flush mounting	
	4 mm	7 mm	7.2 mm	
	500 Hz	50 Hz	250 Hz	
	Stainless steel	Brass	Stainless steel	
	weld spatter resistant	coated, PTFE	weld spatter resistant	
	Stainless steel	LCP PTFE	Stainless steel	
	Connector, M12x1 connector, 4-pin	Connector, M12x1 connector, 4-pin	Connector, M12x1 connector, 4-pin	
	10...30 VDC	10...30 VDC	10...30 VDC	
	-25...70 °C	5...60 °C	-25...70 °C	
	—	magnetic field immune (AC/DC)	—	
	IP67	IP67	IP67	
	CE, cULus, EAC	CE, cULus, EAC	CE, cULus, EAC	
	Page 220	Page 220	Page 220	

PNP normally open	**BES048K** BES R01ZC-PSC50B-BZ00,2-GS04-W05	**BES048N** BES R01ZC-PSC50B-BZ00,2-GS04-W13	
Dimension	32 x 20 x 8 mm	32 x 20 x 8 mm	
Style	block style	block style	
Installation	for flush mounting	for flush mounting	
Range	5 mm	5 mm	
Switching frequency	100 Hz	100 Hz	
Housing material	Zinc, die-cast	Zinc, die-cast	
Surface protection	partly coated	partly coated	
Material sensing surface	ceramic coated	ceramic coated	
Connection	Cable with connector, M12x1 connector, 4-pin, 0.20 m, TPU	Cable with connector, M12x1 connector, 4-pin, 0.20 m, TPU	
Operating voltage Ub	10...30 VDC	10...30 VDC	
Ambient temperature	-25...70 °C	-25...70 °C	
Magnetic field immune	magnetic field immune (AC/DC)	magnetic field immune (AC/DC)	
Protection degree	IP67	IP67	
Approval/Conformity	CE, cULus, EAC	CE, cULus, EAC	
Productview	Page 220	Page 220	

	BES048Y BES R01ZC-PSC70B-BZ00,2-GS04-108			
	32 x 20 x 8 mm			
	block style			
	for flush mounting			
	7 mm			
	150 Hz			
	Zinc, die-cast			
	partly coated			
	ceramic coated			
	Cable with connector, M12x1 connector, 4-pin, 0.20 m, TPU			
	10...30 VDC			
	-25...70 °C			
	—			
	IP67			
	CE, cULus, EAC			
	Page 220			

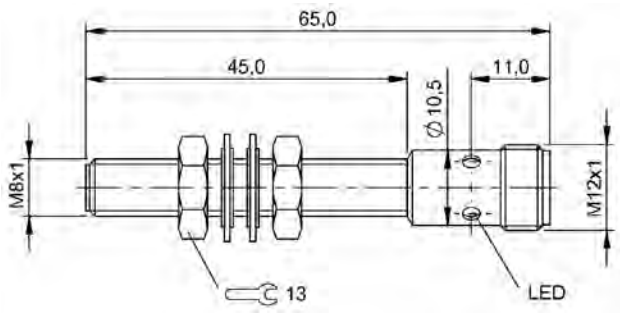

BES02PU

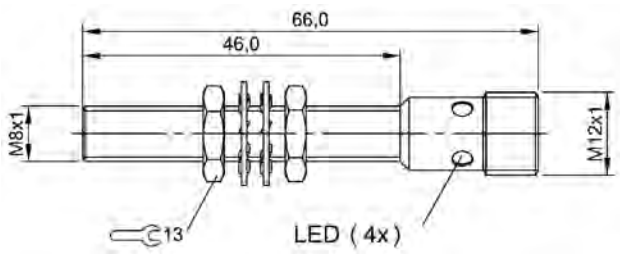

BES02PW

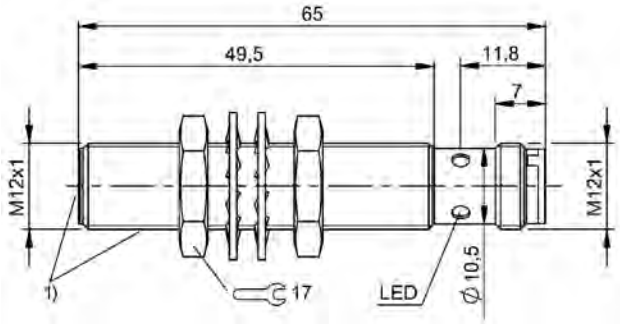

1) Pressure resistant area

BES056A

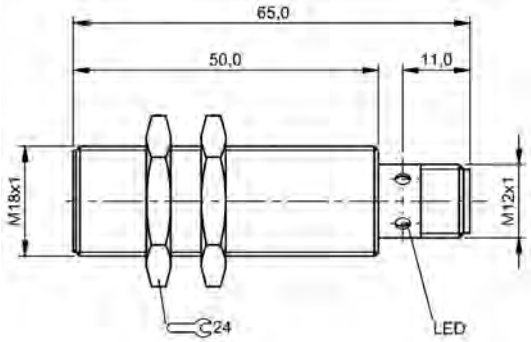

BES02KC

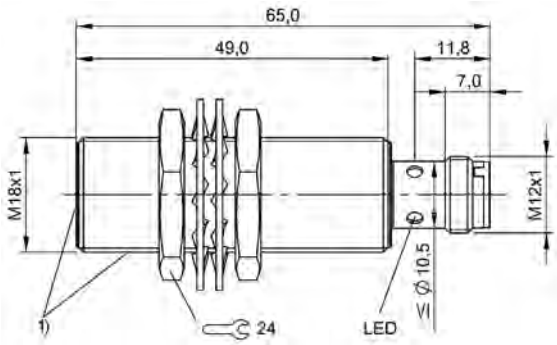

1) Pressure resistant area

BES056C

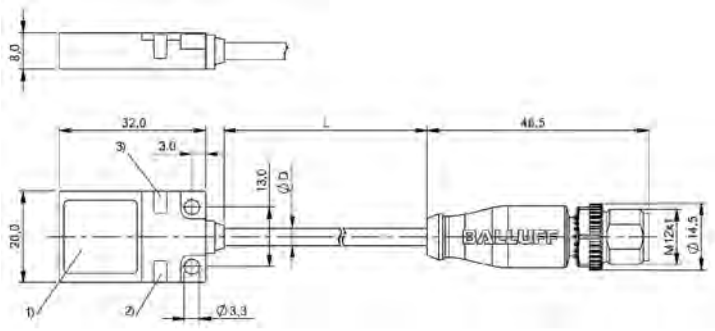

1) Sensing surface, 2) LED green, 3) LED yellow

BES048K, BES048Y

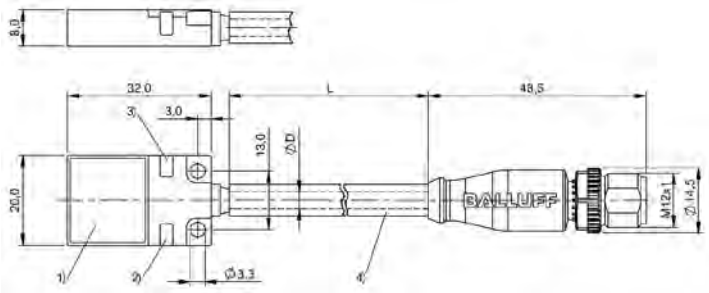

1) Sensing surface, 2) LED green, 3) LED yellow, 4) Silicon tube D=7mm

BES048N

PNP normally open	**BES05RP** BES M05ED-PSD08B-ES02-T	**BES05RR** BES M05ED-PSD08B-ES05-T	
Dimension	Ø 5 x 27 mm	Ø 5 x 27 mm	
Style	M5x0.5	M5x0.5	
Installation	flush	flush	
Range	0.8 mm	0.8 mm	
Switching frequency	1.5 kHz	1.5 kHz	
Housing material	Stainless steel (1.4104)	Stainless steel (1.4104)	
Material sensing surface	Ceramic	Ceramic	
Connection	Cable, 2 m, Silicone	Cable, 5 m, Silicone	
Operating voltage Ub	10...30 VDC	10...30 VDC	
Ambient temperature	0...135 °C	0...135 °C	
IP rating	IP67	IP67	
Approval/Conformity	CE, EAC, cULus, WEEE	CE, EAC, cULus, WEEE	
Productview	Page 232	Page 232	

	BES05RN BES M05ED-PSD08B-ES01-GS49-T	BES05FN BES M08EM-PSD20B-ET05-T	BES04CK BES 515-325-SA74-D-TF-02	
	Ø 5 x 27 mm	Ø 8 x 60 mm	Ø 12 x 62 mm	
	M5x0.5	M8x1	M12x1	
	flush	flush	flush	
	0.8 mm	2 mm	2 mm	
	1.5 kHz	600 Hz	200 Hz	
	Stainless steel (1.4104)	Stainless steel	Stainless steel	
	Ceramic	LCP	PEEK	
	Cable with connector, M8x1, 1 m, Silicone	Cable, 5.0 m, PTFE	Cable, 2.00 m, PTFE	
	10...30 VDC	10...30 VDC	10...30 VDC	
	0...135 °C	0...140 °C	-25...160 °C	
	IP67	IP50	IP68	
	CE, EAC, cULus, WEEE	CE, EAC, WEEE	CE, EAC, WEEE	
	Page 232	Page 232	Page 232	

PNP normally open	**BES02HU** BES 516-325-SA19-03	**BES02HW** BES 516-325-SA19-05	
PNP normally open/normally closed			
Dimension	Ø 12 x 75 mm	Ø 12 x 75 mm	
Style	M12x1	M12x1	
Installation	flush	flush	
Range	2 mm	2 mm	
Switching frequency	1000 Hz	1000 Hz	
Housing material	Brass, nickel plated	Brass, nickel plated	
Material sensing surface	PEEK	PEEK	
Connection	Cable, 3.00 m, Silicone	Cable, 5.00 m, Silicone	
Operating voltage Ub	10...30 VDC	10...30 VDC	
Ambient temperature	-25...120 °C	-25...120 °C	
IP rating	IP68	IP68	
Approval/Conformity	CE, EAC, cULus, WEEE	CE, EAC, cULus, WEEE	
Productview	Page 232	Page 232	

	BES04CL BES 515-356-SA35-D-TF-02	BES043T BES 515-326-SA49-D-TF-02	BES04AT BES 515-326-SA49-D-TF-05	
				BES02H5 BES 516-105-SA2-05
	Ø 12 x 66 mm	Ø 18 x 95 mm	Ø 18 x 95 mm	Ø 18 x 95.5 mm
	M12x1	M18x1	M18x1	M18x1
	non-flush	flush	flush	flush
	4 mm	5 mm	5 mm	5 mm
	200 Hz	200 Hz	200 Hz	500 Hz
	Stainless steel (1.4571)	Stainless steel	Stainless steel	Brass, nickel plated
	PEEK	PEEK	PEEK	PBT
	Cable, 2.00 m, PTFE	Cable, 2.00 m, PTFE	Cable, 5.00 m, PTFE	Cable, 5.00 m, Silicone
	10...30 VDC	10...30 VDC	10...30 VDC	10...30 VDC
	-25...160 °C	-25...160 °C	-25...160 °C	-25...120 °C
	IP68	IP68	IP68	IP67
	CE, EAC, WEEE	CE, EAC, WEEE	CE, EAC, WEEE	CE, EAC, WEEE
	Page 232	Page 232	Page 232	Page 232

PNP normally open	**BES05N4** BES M18ED-PSC50B-GT05-T		
PNP normally open/normally closed		**BES02H6** BES 516-105-SA5	
Dimension	Ø 18 x 35 mm	Ø 18 x 83 mm	
Style	M18x1	M18x1	
Installation	flush	flush	
Range	5 mm	5 mm	
Switching frequency	9 Hz	500 Hz	
Housing material	Stainless steel	Brass, nickel plated	
Material sensing surface	LCP	PBT	
Connection	Connector, M12x1-Male, 4-pin, 5.0 m, PTFE	Connector, M12x1-Male, 4-pin	
Operating voltage Ub	10...30 VDC	10...30 VDC	
Ambient temperature	0...230 °C	-25...120 °C	
IP rating	IP50	IP67	
Approval/Conformity	CE, EAC, WEEE	CE, EAC, WEEE	
Productview	Page 233	Page 233	

	BES04C7 BES 515-360-SA13-D-TF-05		**BES043W** BES 515-327-SA22-D-TF-02	**BES04AU** BES 515-327-SA22-D-TF-05
		BES02H7 BES 516-114-SA1-05		
	Ø 18 x 103 mm	Ø 30 x 91.5 mm	Ø 30 x 100 mm	Ø 30 x 100 mm
	M18x1	M30x1.5	M30x1.5	M30x1.5
	non-flush	flush	flush	flush
	8 mm	10 mm	10 mm	10 mm
	200 Hz	300 Hz	200 Hz	200 Hz
	Stainless steel	Brass, nickel plated	Stainless steel	Stainless steel
	PEEK	PBT	PEEK	PEEK
	Cable, 5.00 m, PTFE	Cable, 5.00 m, Silicone	Cable, 2.00 m, PTFE	Cable, 5.00 m, PTFE
	10...30 VDC	10...30 VDC	10...30 VDC	10...30 VDC
	-25...160 °C	-25...120 °C	-25...160 °C	-25...160 °C
	IP68	IP67	IP68	IP68
	CE, EAC, WEEE	CE, EAC, WEEE	CE, EAC, WEEE	CE, EAC, WEEE
	Page 233	Page 233	Page 233	Page 233

PNP normally open	**BES05N5** BES M30N1-PSC10B-GT05-T		
PNP normally open/normally closed		**BES02HE** BES 516-125-SA1-05	
Dimension	Ø 30 x 74 mm	Ø 30 x 91 mm	
Style	M30x1.5	M30x1.5	
Installation	flush	non-flush	
Range	10 mm	15 mm	
Switching frequency	9 Hz	100 Hz	
Housing material	Stainless steel	Brass, nickel plated	
Material sensing surface	LCP	PA 12	
Connection	Connector, M12x1, 4-pin, 5.0 m, PTFE	Cable, 5.00 m, Silicone	
Operating voltage Ub	10...30 VDC	10...30 VDC	
Ambient temperature	0...230 °C	-25...120 °C	
IP rating	IP50	IP67	
Approval/Conformity	CE, EAC, WEEE	CE, EAC, WEEE	
Productview	Page 233	Page 233	

	BES043Y BES 515-362-SA4-D-TF-02	BES04C8 BES 515-362-SA4-D-TF-05	BES05N7 BES Q08EC-PSD20B-ES05	BES05N8 BES Q12EC-PSD40B-ES05
	Ø 30 x 110 mm	Ø 30 x 110 mm	8 x 8 x 55 mm	12 x 12 x 59 mm
	M30x1.5	M30x1.5	8x8	12x12
	non-flush	non-flush	flush	flush
	15 mm	15 mm	2 mm	4 mm
	200 Hz	200 Hz	500 Hz	500 Hz
	Stainless steel	Stainless steel	Stainless steel	Stainless steel
	PEEK	PEEK	LCP	LCP
	Cable, 2.00 m, PTFE	Cable, 5.00 m, PTFE	Cable, 5.0 m, Silicone	Cable, 5.0 m, Silicone
	10...30 VDC	10...30 VDC	10...30 VDC	10...30 VDC
	-25...160 °C	-25...160 °C	-25...140 °C	-25...130 °C
	IP68	IP68	IP65	IP65
	CE, EAC, WEEE	CE, EAC, WEEE	CE, EAC, WEEE	CE, EAC, WEEE
	Page 233	Page 233	Page 234	Page 234

PNP normally open		**BES05N9** BES Q40KG-PSD25F-S04G	
For switching amplifier	**BES05N6** BES Q40KG-X20F-SZ03		
Dimension	40 x 40 x 66.6 mm	40 x 40 x 70.7 mm	
Style	40x40	40x40	
Installation	non-flush	non-flush	
Range	20 mm	25 mm	
Switching frequency	100 Hz	100 Hz	
Housing material	Stainless steel	Stainless steel (1.4305) LCP	
Material sensing surface	LCP	LCP	
Connection	Connector, LEMO connec-tor-Special connector, 2-pin	Connector, M12x1-Male, 4-pin	
Operating voltage Ub	10...30 VDC	10...35 VDC	
Ambient temperature	0...230 °C	0...150 °C	
IP rating	IP50	IP67	
Approval/Conformity	CE, EAC, WEEE	CE, EAC, WEEE	
Productview	Page 234	Page 234	

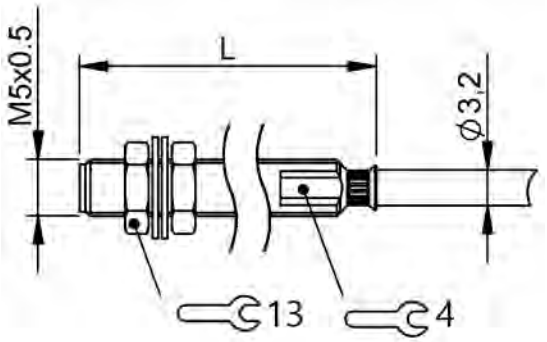

BES05RP, BES05RR

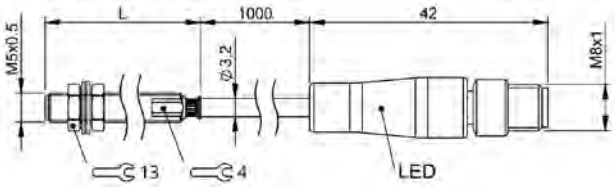

BES05RN

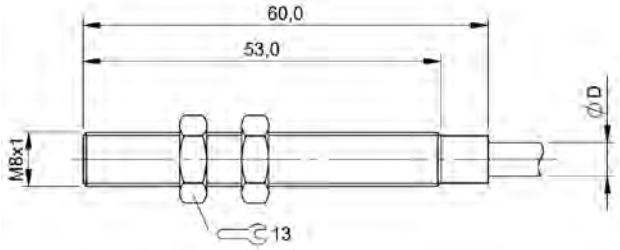

BES05FN

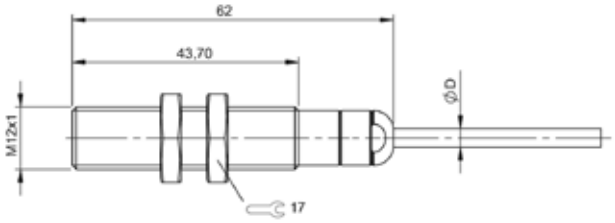

BES04CK

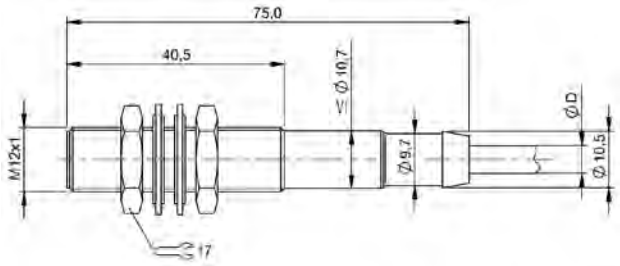

BES02HU, BES02HW

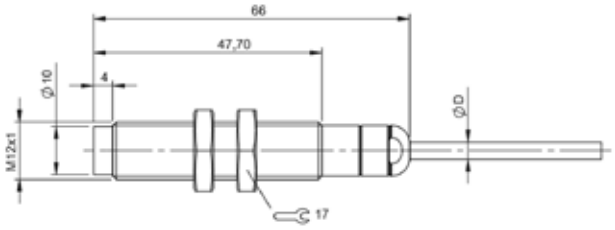

BES04CL

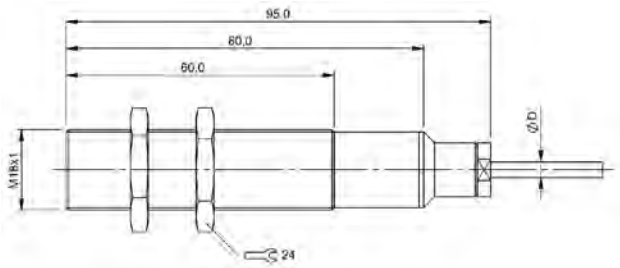

BES043T, BES04AT

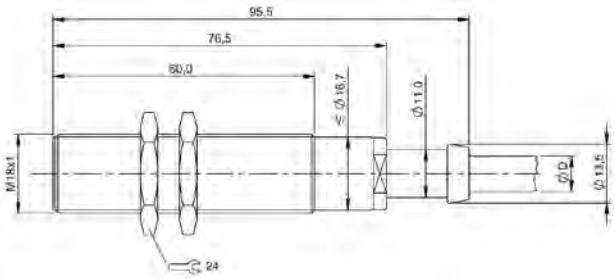

BES02H5

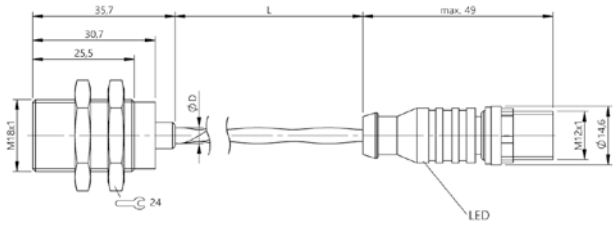

BES05N4

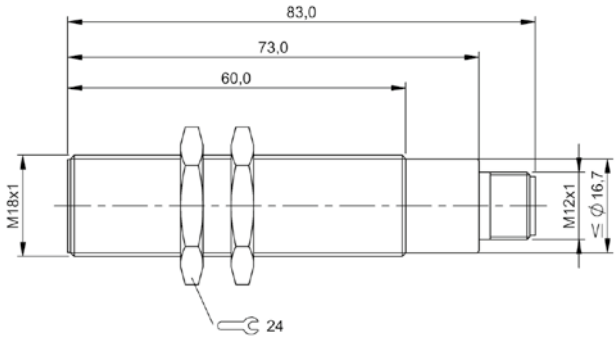

BES02H6

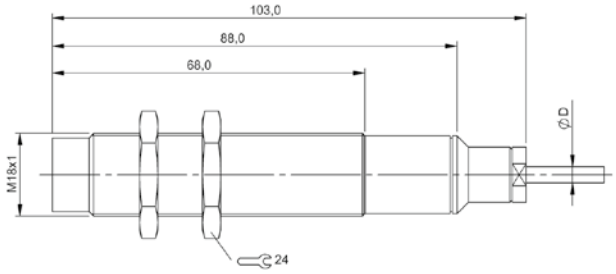

BES04C7

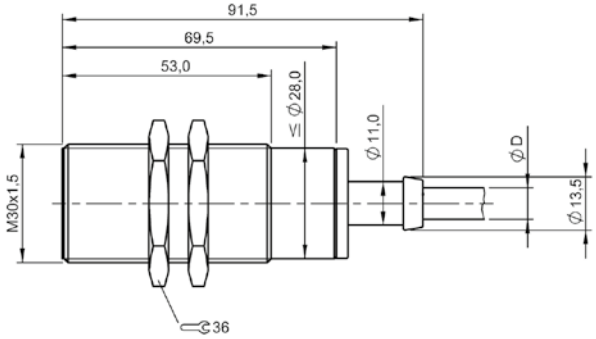

BES02H7

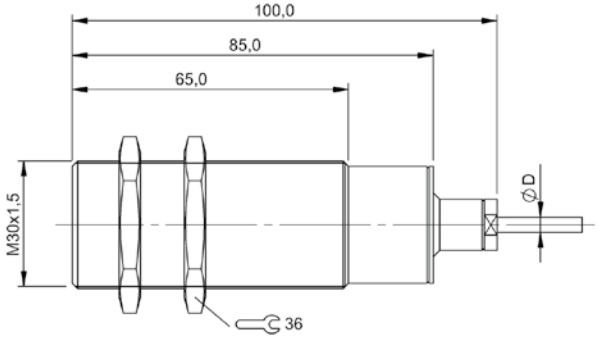

BES043W, BES04AU

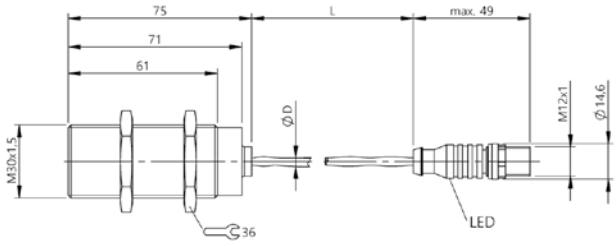

BES05N5

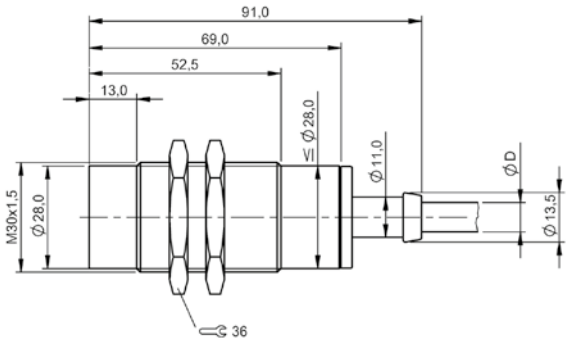

BES02HE

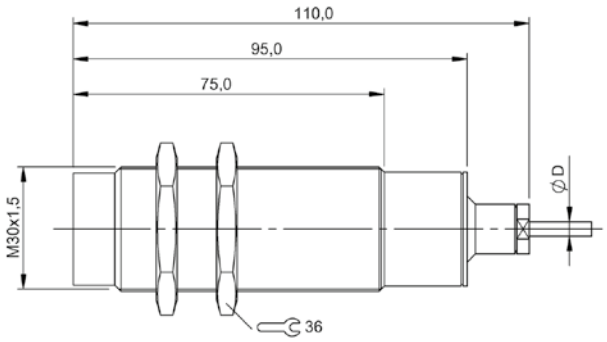

BES043Y, BES04C8

Do you need more details? Our Product Finder at www.balluff.com provides you with product-specific information, including technical drawings, data sheets, user guides and more for each individual product. All items are available for download.

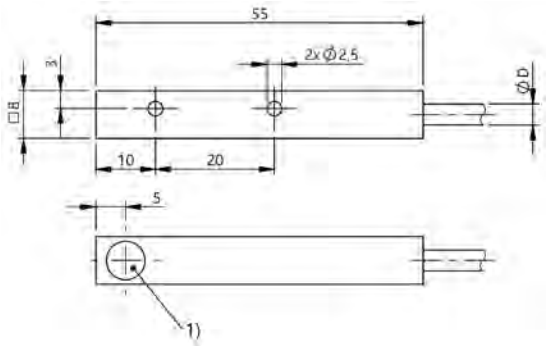

1) Sensing surface

BES05N7

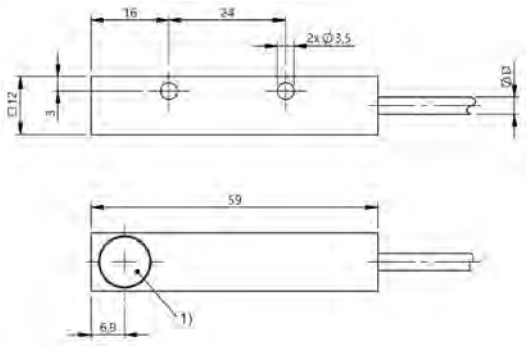

1) Sensing surface

BES05N8

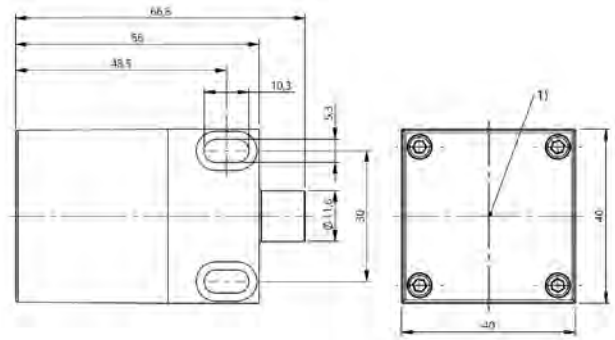

1) Sensing surface

BES05N6

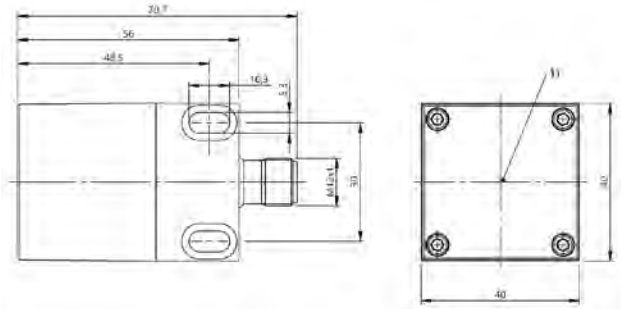

1) Sensing surface

BES05N9

NAMUR	**BES02ZR** BES G06MD-GNX10B-EV02-EEX	**BES02ZT** BES M08MD-GNX10B-EV02-EEX		
PNP normally open			**BES05M3** BES M12EG2-PSC20B-BV02-EXF	
Dimension	Ø 6.5 x 30 mm	Ø 8 x 30 mm	Ø 12 x 59 mm	
Style	D6.5	M8x1	M12x1	
Installation	for flush mounting	for flush mounting	for flush mounting	
Range	1 mm	1 mm	2 mm	
Switching frequency	2000 Hz	2000 Hz	180 Hz	
Housing material	Brass	Brass	Stainless steel	
Surface protection	Nickel-free coated	Nickel-free coated	—	
Material sensing surface	PBT	PBT	Stainless steel	
Connection	Cable, 2.00 m, PVC	Cable, 2.00 m, PVC	Cable, PUR	
Operating voltage Ub	7.7...9 VDC	7.7...9 VDC	10...30 VDC	
Ambient temperature	-20...70 °C	-20...70 °C	-5...60 °C	
Pressure rating max.	—	—	—	
Ex category	ATEX: 2G (EPL Gb) ATEX: 1D (EPL Da)	ATEX: 2G (EPL Gb) ATEX: 1D (EPL Da)	ATEX: 3G (EPL Gc) ATEX: 3D (EPL Dc) IECEx: EPL Gc IECEx: EPL Dc	
Protection degree	IP67	IP67	IP67	
Approval/Conformity	CE, EAC, ATEX, cCSAus, FM	CE, EAC, ATEX, cCSAus, FM	CE, EAC, IECEx, ATEX	
Productview	Page 248	Page 248	Page 248	

	BES05NE BES M12MG2-GNX20B-BT02-EXA	BES05NM BES M12MG2-GNX20B-BT02-EXB	BHS004L BES 516-300-S318-S4-N	
BES05L6 BES M12MF2-PSC20B-BV02-EXE				BHS002W BES 516-300-S249-NEX-S4-D
Ø 12 x 59 mm	Ø 12 x 62 mm	Ø 12 x 62 mm	Ø 12 x 56 mm	Ø 12 x 56 mm
M12x1	M12x1	M12x1	M12x1	M12x1
for flush mounting	for flush mounting	for flush mounting	for flush mounting	for flush mounting
2 mm	2 mm	2 mm	1.5 mm	1.5 mm
300 Hz	—	—	1000 Hz	2000 Hz
Stainless steel	Stainless steel	Stainless steel	Stainless steel	Stainless steel
—	—	—	—	—
LCP	PEEK	PTFE	POM	EP
Cable, PUR	Cable, FEP	Cable, FEP	Connector, M12x1 connector, 4-pin	Connector, M12x1 connector, 4-pin
10...30 VDC	7.7...9 VDC	7.7...9 VDC	7.7...9 VDC	10...30 VDC
-20...60 °C	-20...60 °C, depending on Ex category	-20...60 °C, depending on Ex category	-25...70 °C	-25...80 °C
—	—	—	500 bar	500 bar
ATEX: 3G (EPL Gc) ATEX: 3D (EPL Dc) IECEx: EPL Gc IECEx: EPL Dc	ATEX: 1G (EPL Ga) ATEX: 1D (EPL Da)	ATEX: 1G (EPL Ga) ATEX: 1D (EPL Da)	ATEX: 2G (EPL Gb)	ATEX: 3G (EPL Gc)
IP67	IP68	IP68	IP68	IP68
CE, EAC, IECEx, ATEX	CE, EAC, IECEx, ATEX	CE, EAC, IECEx, ATEX	CE, EAC, IECEx, ATEX	CE, EAC, ATEX
Page 248	Page 248	Page 248	Page 248	Page 248

NAMUR	**BHS0034** BES 516-300-S266-S4	**BHS004K** BES 516-300-S315-S4-N		
PNP normally open			**BHS005P** BHS B135V-PSD15-NEX-S04	
Dimension	Ø 12 x 56 mm	Ø 12 x 56 mm	Ø 12 x 78 mm	
Style	M12x1	M12x1	M12x1	
Installation	for flush mounting	for flush mounting	for flush mounting	
Range	1.5 mm	1.5 mm	1.5 mm	
Switching frequency	1000 Hz	1000 Hz	400 Hz	
Housing material	Stainless steel	Stainless steel	Stainless steel	
Surface protection	—	—	—	
Material sensing surface	POM	POM	Ceramic	
Connection	Connector, M12x1 connector, 4-pin	Connector, M12x1 connector, 4-pin	Connector, M12x1 connector, 4-pin	
Operating voltage Ub	7.7...9 VDC	7.7...9 VDC	10...30 VDC	
Ambient temperature	-25...70 °C	-25...70 °C	-25...100 °C	
Pressure rating max.	500 bar	500 bar	500 bar	
Ex category	ATEX: 2G (EPL Gb)	ATEX: 2G (EPL Gb)	ATEX: 3G (EPL Gc)	
Protection degree	IP68	IP68	IP68	
Approval/Conformity	CE, EAC	CE, EAC, IECEx, ATEX	CE, EAC, ATEX	
Productview	Page 248	Page 248	Page 249	

	BES05MW BES M12MG2-GNX20B-S04G-EXC	BES02ZU BES M12ME-GNX40B-S04G-EEX		BES05NF BES M12MG2-GNX40F-BT02-EXA	BES05NN BES M12MG2-GNX40F-BT02-EXB
			BES05L7 BES M12MF2-PSC40F-BV02-EXE		
	Ø 12 x 65 mm	Ø 12 x 45 mm	Ø 12 x 61 mm	Ø 12 x 66 mm	Ø 12 x 66 mm
	M12x1	M12x1	M12x1	M12x1	M12x1
	for flush mounting	for flush mounting	non-flush	non-flush	non-flush
	2 mm	4 mm	1.5 mm	4 mm	4 mm
	—	700 Hz	300 Hz	—	—
	Brass	Brass	Stainless steel	Stainless steel	Stainless steel
	nickel plated	Nickel-free coated	—	—	—
	PA	PBT	LCP POM	PEEK	PTFE
	Connector, M12x1 connector, 4-pin	Connector, M12x1 connector, 4-pin	Cable, PUR	Cable, FEP	Cable, FEP
	7.7...9 VDC	7.7...9 VDC	10...30 VDC	7.7...9 VDC	7.7...9 VDC
	-20...60 °C, depending on Ex category	-20...70 °C	-20...60 °C	-20...60 °C, depending on Ex category	-20...60 °C, depending on Ex category
	—	—	—	—	—
	ATEX: 1G (EPL Ga) ATEX: 1D (EPL Da)	ATEX: 1G (EPL Ga) ATEX: 1D (EPL Da)	ATEX: 3G (EPL Gc) ATEX: 3D (EPL Dc) IECEx: EPL Gc IECEx: EPL Dc	ATEX: 1G (EPL Ga) ATEX: 1D (EPL Da)	ATEX: 1G (EPL Ga) ATEX: 1D (EPL Da)
	IP67	IP67	IP67	IP68	IP68
	CE, EAC, IECEx, ATEX	CE, EAC, cCSAus, FM	CE, EAC, IECEx, ATEX	CE, EAC, IECEx, ATEX	CE, EAC, IECEx, ATEX
	Page 249	Page 249	Page 249	Page 249	Page 249

NAMUR	**BES05MY** BES M12MG2-GNX40F-S04G-EXC			
PNP normally open		**BES05M4** BES M18EG2-PSC50B-BV02-EXF	**BES05L2** BES M18MF2-PSC50B-BV02-EXD	
Dimension	Ø 12 x 70 mm	Ø 18 x 57 mm	Ø 18 x 60 mm	
Style	M12x1	M18x1	M18x1	
Installation	non-flush	for flush mounting	for flush mounting	
Range	4 mm	5 mm	5 mm	
Switching frequency	—	180 Hz	300 Hz	
Housing material	Brass	Stainless steel	Brass	
Surface protection	nickel plated	—	nickel plated	
Material sensing surface	PA	Stainless steel	PA	
Connection	Connector, M12x1 connector, 4-pin	Cable, PUR	Cable, PUR	
Operating voltage Ub	7.7...9 VDC	10...30 VDC	18...27 VDC	
Ambient temperature	-20...60 °C, depending on Ex category	-10...60 °C	-20...60 °C	
Pressure rating max.	—	—	—	
Ex category	ATEX: 1G (EPL Ga) ATEX: 1D (EPL Da)	ATEX: 3G (EPL Gc) ATEX: 3D (EPL Dc) IECEx: EPL Gc IECEx: EPL Dc	ATEX: 1G (EPL Ga) ATEX: 1D (EPL Da)	
Protection degree	IP67	IP67	IP67	
Approval/Conformity	CE, EAC, IECEx, ATEX	CE, EAC, IECEx, ATEX	CE, EAC, IECEx, ATEX	
Productview	Page 249	Page 249	Page 250	

	BES05NH BES M18MH2-GNX50B-BT02-EXA	BES05NP BES M18MH2-GNX50B-BT02-EXB	BES05MZ BES M18MH2-GNX50B-S04G-EXC	
BES05L8 BES M18MF2-PSC50B-BV02-EXE				
Ø 18 x 60 mm	Ø 18 x 67 mm	Ø 18 x 67 mm	Ø 18 x 67 mm	
M18x1	M18x1	M18x1	M18x1	
for flush mounting	for flush mounting	for flush mounting	for flush mounting	
5 mm	5 mm	5 mm	5 mm	
300 Hz	—	—	—	
Brass	Stainless steel	Stainless steel	Brass	
nickel plated	—	—	nickel plated	
PA	PEEK	PTFE	PA	
Cable, PUR	Cable, FEP	Cable, FEP	Connector, M12x1 connector, 4-pin	
10...30 VDC	7.7...9 VDC	7.7...9 VDC	7.7...9 VDC	
-20...60 °C	-20...60 °C, depending on Ex category	-20...60 °C, depending on Ex category	-20...60 °C, depending on Ex category	
—	—	—	—	
ATEX: 3G (EPL Gc) ATEX: 3D (EPL Dc) IECEx: EPL Gc IECEx: EPL Dc	ATEX: 1G (EPL Ga) ATEX: 1D (EPL Da)	ATEX: 1G (EPL Ga) ATEX: 1D (EPL Da)	ATEX: 1G (EPL Ga) ATEX: 1D (EPL Da)	
IP67	IP68	IP68	IP67	
CE, EAC, IECEx, ATEX	CE, EAC, IECEx, ATEX	CE, EAC, IECEx, ATEX	CE, EAC, IECEx, ATEX	
Page 250	Page 250	Page 250	Page 250	

NAMUR	**BES02ZW** BES M18ME1-GNX80B-S04G-EEX			
PNP normally open		**BES05L3** BES M18MF2-PSC80F-BV02-EXD	**BES05L9** BES M18MF2-PSC80F-BV02-EXE	
Dimension	Ø 18 x 46 mm	Ø 18 x 69 mm	Ø 18 x 69 mm	
Style	M18x1	M18x1	M18x1	
Installation	for flush mounting	non-flush	non-flush	
Range	8 mm	5.5 mm	5.5 mm	
Switching frequency	400 Hz	300 Hz	300 Hz	
Housing material	Brass	Brass	Brass	
Surface protection	Nickel-free coated	nickel plated	nickel plated	
Material sensing surface	PBT	PA POM	PA POM	
Connection	Connector, M12x1 connector, 4-pin	Cable, PUR	Cable, PUR	
Operating voltage Ub	7.7...9 VDC	18...27 VDC	10...30 VDC	
Ambient temperature	-20...70 °C	-20...60 °C	-20...60 °C	
Pressure rating max.	—	—	—	
Ex category	ATEX: 1G (EPL Ga) ATEX: 1D (EPL Da)	ATEX: 1G (EPL Ga) ATEX: 1D (EPL Da)	ATEX: 3G (EPL Gc) ATEX: 3D (EPL Dc) IECEx: EPL Gc IECEx: EPL Dc	
Protection degree	IP67	IP67	IP67	
Approval/Conformity	CE, EAC, cCSAus, FM	CE, EAC, IECEx, ATEX	CE, EAC, IECEx, ATEX	
Productview	Page 250	Page 250	Page 250	

	BES05NJ BES M18MH2-GNX80F-BT02-EXA	BES05NR BES M18MH2-GNX80F-BT02-EXB	BES05N0 BES M18MH2-GNX80F-S04G-EXC		
				BES05M5 BES M30EG2-PSC10B-BV02-EXF	BES05L4 BES M30MF2-PSC10B-BV02-EXD
	Ø 18 x 75 mm	Ø 18 x 75 mm	Ø 18 x 75 mm	Ø 30 x 59 mm	Ø 30 x 62 mm
	M18x1	M18x1	M18x1	M30x1.5	M30x1.5
	non-flush	non-flush	non-flush	for flush mounting	for flush mounting
	8 mm	8 mm	8 mm	10 mm	10 mm
	—	—	—	180 Hz	300 Hz
	Stainless steel	Stainless steel	Brass	Stainless steel	Brass
	—	—	nickel plated	—	nickel plated
	PEEK	PTFE	PA	Stainless steel	PA
	Cable, FEP	Cable, FEP	Connector, M12x1 connector, 4-pin	Cable, PUR	Cable, PUR
	7.7...9 VDC	7.7...9 VDC	7.7...9 VDC	10...30 VDC	18...27 VDC
	-20...60 °C, depending on Ex category	-20...60 °C, depending on Ex category	-20...60 °C, depending on Ex category	-20...60 °C	-20...60 °C
	—	—	—	—	—
	ATEX: 1G (EPL Ga) ATEX: 1D (EPL Da)	ATEX: 1G (EPL Ga) ATEX: 1D (EPL Da)	ATEX: 1G (EPL Ga) ATEX: 1D (EPL Da)	ATEX: 3G (EPL Gc) ATEX: 3D (EPL Dc) IECEx: EPL Gc IECEx: EPL Dc	ATEX: 1G (EPL Ga) ATEX: 1D (EPL Da)
	IP68	IP68	IP67	IP67	IP67
	CE, EAC, IECEx, ATEX	CE, EAC, IECEx, ATEX	CE, EAC, IECEx, ATEX	CE, EAC, IECEx, ATEX	CE, EAC, IECEx, ATEX
	Page 250	Page 250	Page 251	Page 251	Page 251

NAMUR		**BES05NK** BES M30MH2-GNX10B-BT02-EXA	**BES05NT** BES M30MH2-GNX10B-BT02-EXB
PNP normally open	**BES05LA** BES M30MF2-PSC10B-BV02-EXE		
Dimension	Ø 30 x 62 mm	Ø 30 x 68 mm	Ø 30 x 68 mm
Style	M30x1.5	M30x1.5	M30x1.5
Installation	for flush mounting	for flush mounting	for flush mounting
Range	10 mm	10 mm	10 mm
Switching frequency	300 Hz	—	—
Housing material	Brass	Stainless steel	Stainless steel
Surface protection	nickel plated	—	—
Material sensing surface	PA	PEEK	PTFE
Connection	Cable, PUR	Cable, FEP	Cable, FEP
Operating voltage Ub	10...30 VDC	7.7...9 VDC	7.7...9 VDC
Ambient temperature	-20...60 °C	-20...60 °C, depending on Ex category	-20...60 °C, depending on Ex category
Pressure rating max.	—	—	—
Ex category	ATEX: 3G (EPL Gc) ATEX: 3D (EPL Dc) IECEx: EPL Gc IECEx: EPL Dc	ATEX: 1G (EPL Ga) ATEX: 1D (EPL Da)	ATEX: 1G (EPL Ga) ATEX: 1D (EPL Da)
Protection degree	IP67	IP68	IP68
Approval/Conformity	CE, EAC, IECEx, ATEX	CE, EAC, IECEx, ATEX	CE, EAC, IECEx, ATEX
Productview	Page 251	Page 251	Page 251

	BES05N1 BES M30MH2-GNX10B-S04G-EXC	BES02ZY BES M30ME1-GNX15B-S04G-EEX			BES05NL BES M30MH2-GNX15F-BT02-EXA
			BES05L5 BES M30MF2-PSC15F-BV02-EXD	BES05LC BES M30MF2-PSC15F-BV02-EXE	
	Ø 30 x 68 mm	Ø 30 x 50 mm	Ø 30 x 74 mm	Ø 30 x 74 mm	Ø 30 x 77 mm
	M30x1.5	M30x1.5	M30x1.5	M30x1.5	M30x1.5
	for flush mounting	for flush mounting	non-flush	non-flush	non-flush
	10 mm	15 mm	12 mm	12 mm	15 mm
	—	100 Hz	300 Hz	300 Hz	—
	Brass	Brass	Brass	Brass	Stainless steel
	nickel plated	Nickel-free coated	nickel plated	nickel plated	—
	PA	PBT	PA POM	PA POM	PEEK
	Connector, M12x1 connector, 4-pin	Connector, M12x1 connector, 4-pin	Cable, PUR	Cable, PUR	Cable, FEP
	7.7...9 VDC	7.7...9 VDC	18...27 VDC	10...30 VDC	7.7...9 VDC
	-20...60 °C, depending on Ex category	-20...70 °C	-20...60 °C	-20...60 °C	-20...60 °C, depending on Ex category
	—	—	—	—	—
	ATEX: 1G (EPL Ga) ATEX: 1D (EPL Da)	ATEX: 1G (EPL Ga) ATEX: 1D (EPL Da)	ATEX: 1G (EPL Ga) ATEX: 1D (EPL Da)	ATEX: 3G (EPL Gc) ATEX: 3D (EPL Dc) IECEx: EPL Gc IECEx: EPL Dc	ATEX: 1G (EPL Ga) ATEX: 1D (EPL Da)
	IP67	IP67	IP67	IP67	IP68
	CE, EAC, IECEx, ATEX	CE, EAC, cCSAus, FM	CE, EAC, IECEx, ATEX	CE, EAC, IECEx, ATEX	CE, EAC, IECEx, ATEX
	Page 251	Page 251	Page 251	Page 251	Page 252

Do you need more details? Our Product Finder at www.balluff.com provides you with product-specific information, including technical drawings, data sheets, user guides and more for each individual product. All items are available for download.

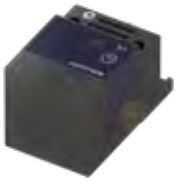

NAMUR	BES05NU BES M30MH2-GNX15F-BT02-EXB	BES05N2 BES M30MH2-GNX15F-S04G-EXC	BES02ZZ BES Q40KFU-GNX20B-S92G-EEX	
Dimension	Ø 30 x 77 mm	Ø 30 x 77 mm	40 x 40 x 66 mm	
Style	M30x1.5	M30x1.5	block style	
Installation	non-flush	non-flush	for flush mounting	
Range	15 mm	15 mm	20 mm	
Switching frequency	—	—	200 Hz	
Housing material	Stainless steel	Brass	PPE PPS	
Surface protection	—	nickel plated	—	
Material sensing surface	PTFE	PA	PPE	
Connection	Cable, FEP	Connector, M12x1-Male, connector, 4-pin	Connector, M12x1-Male, connector, 5-pin	
Operating voltage Ub	7.7...9 VDC	7.7...9 VDC	7.7...9 VDC	
Ambient temperature	-20...60 °C, depending on Ex category	-20...60 °C, depending on Ex category	-20...70 °C	
Pressure rating max.	—	—	—	
Ex category	ATEX: 1G (EPL Ga) ATEX: 1D (EPL Da)	ATEX: 1G (EPL Ga) ATEX: 1D (EPL Da)	ATEX: 2G (EPL Gb) ATEX: 1D (EPL Da)	
Protection degree	IP68	IP67	IP67	
Approval/Conformity	CE, EAC, IECEx, ATEX	CE, EAC, IECEx, ATEX	CE, EAC, cCSAus, FM	
Productview	Page 252	Page 252	Page 252	

	BES0300 BES Q40KFU-GNX35F-S92G-EEX				
	40 x 40 x 66 mm				
	block style				
	non-flush				
	35 mm				
	100 Hz				
	PPE PPS				
	—				
	PPE				
	Connector, M12x1-Male, connector, 5-pin				
	7.7...9 VDC				
	-20...70 °C				
	—				
	ATEX: 2G (EPL Gb) ATEX: 1D (EPL Da)				
	IP67				
	CE, EAC, cCSAus, FM				
	Page 252				

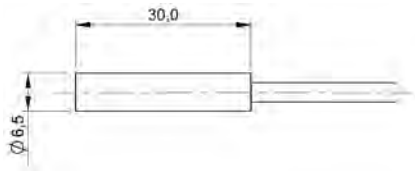

BES02ZR

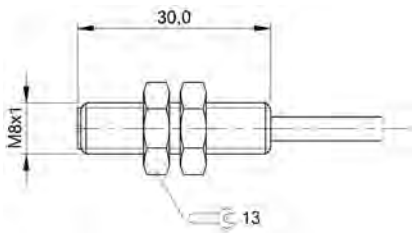

BES02ZT

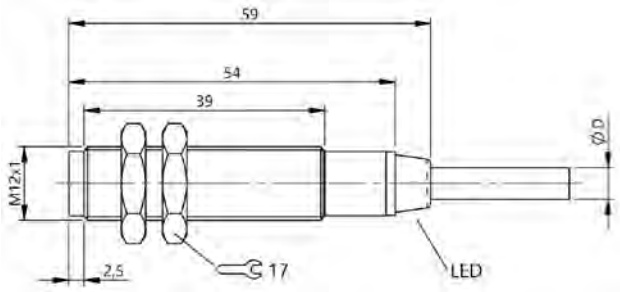

BES05M3

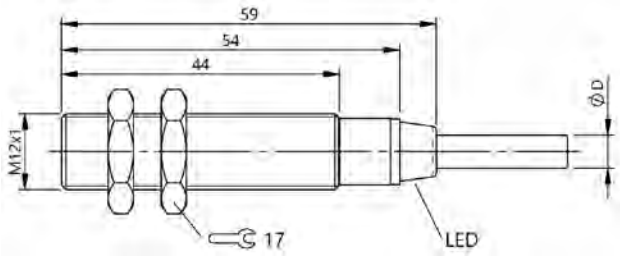

BES05L6

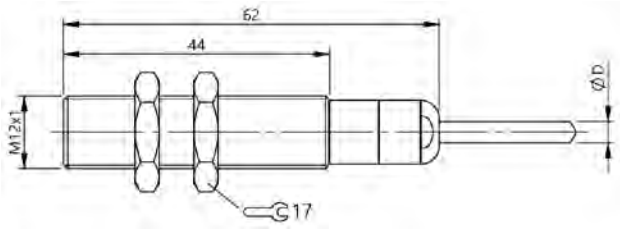

BES05NE

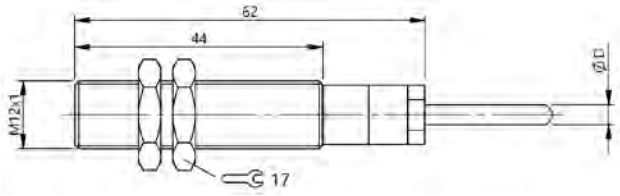

BES05NM

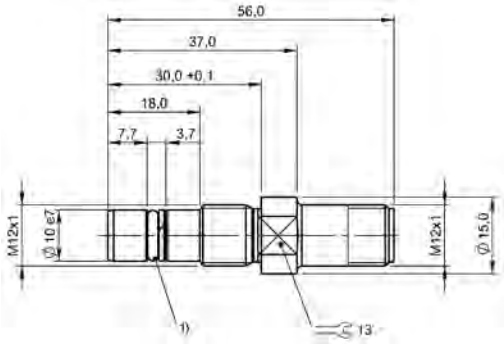

1) O-Ring with thrust ring

BHS004L

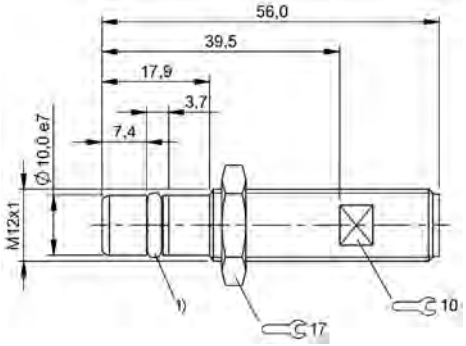

1) O-Ring with thrust ring

BHS002W, BHS0034, BHS004K

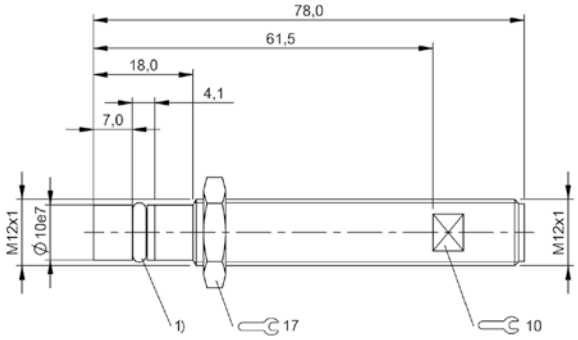

1) O-Ring with thrust ring

BHS005P

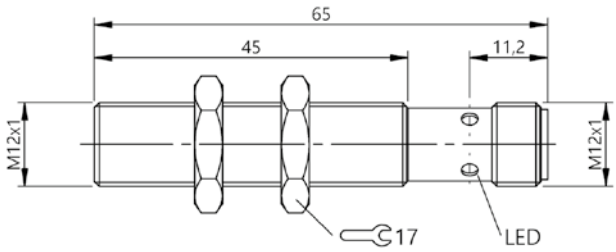

BES05MW

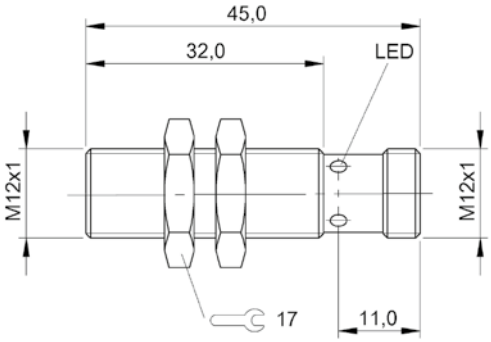

BES02ZU

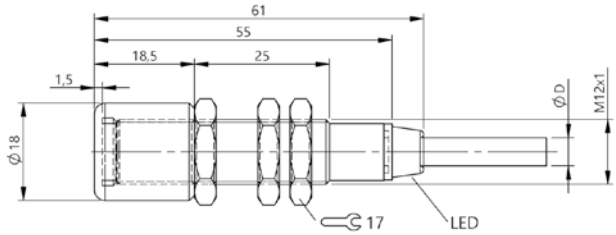

BES05L7

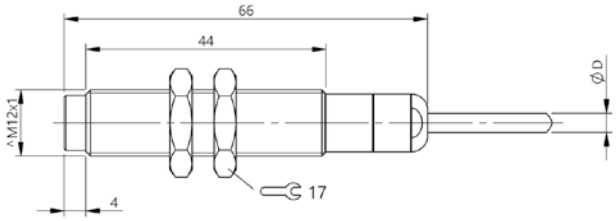

BES05NF

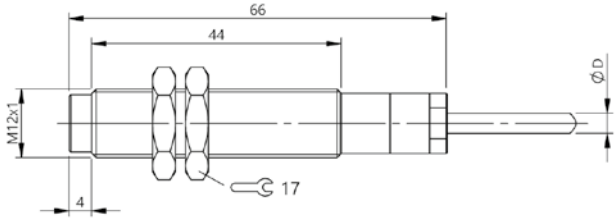

BES05NN

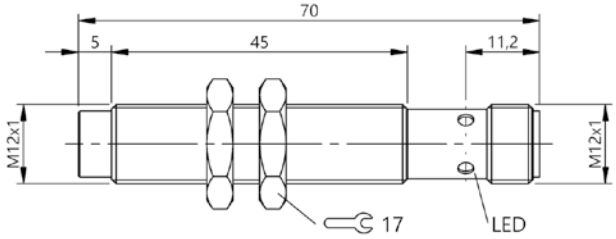

BES05MY

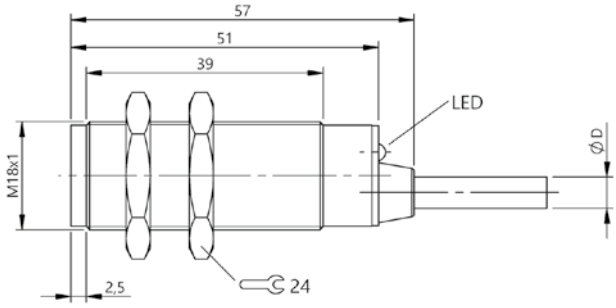

BES05M4

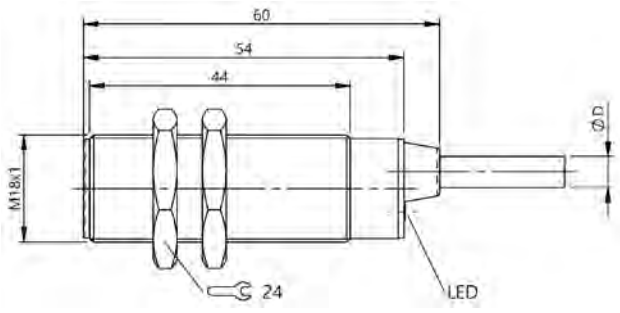

BES05L2, BES05L8

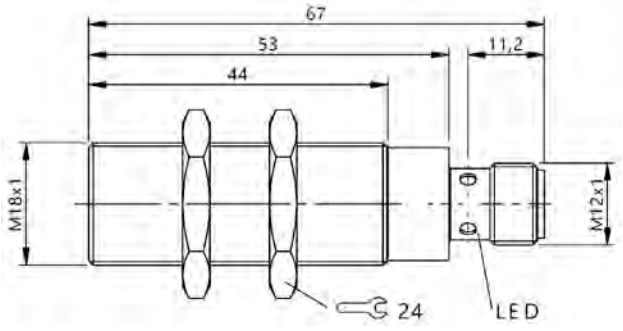

BES05NH, BES05MZ

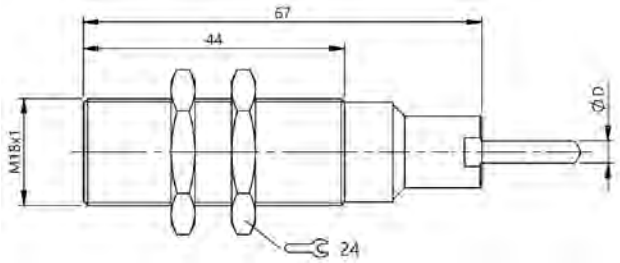

BES05NP

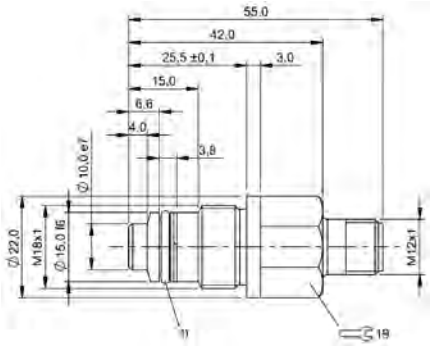

1) O-Ring with thrust ring

BHS004H

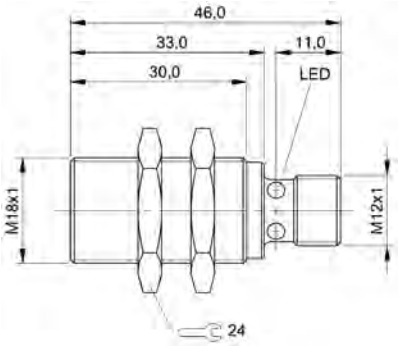

BES02ZW

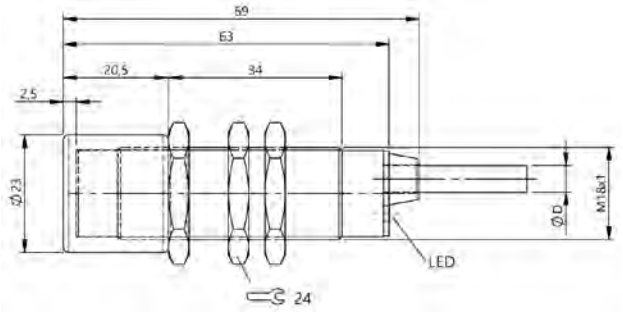

BES05L3, BES05L9

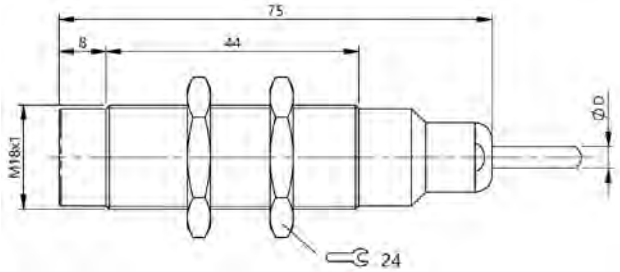

BES05NJ

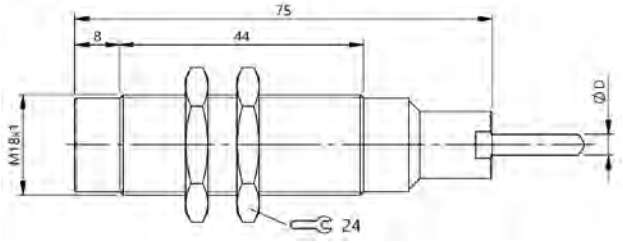

BES05NR

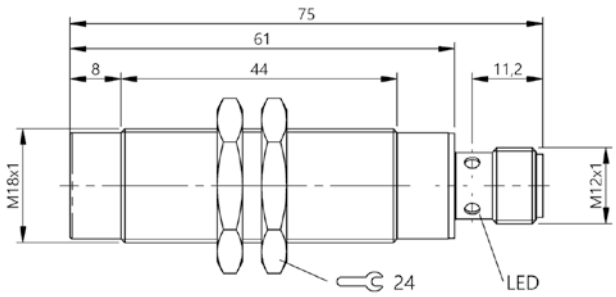

BES05N0

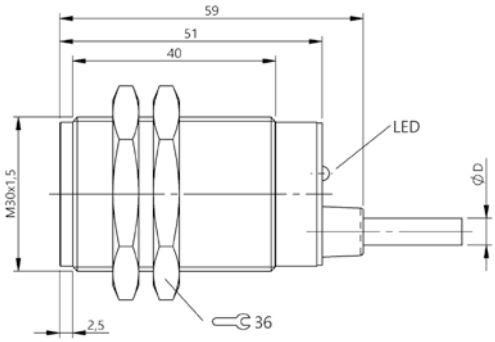

BES05M5

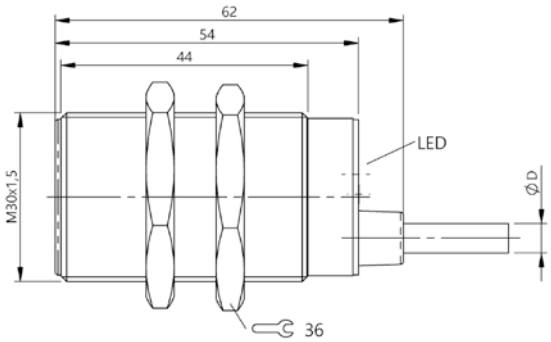

BES05L4, BES05LA

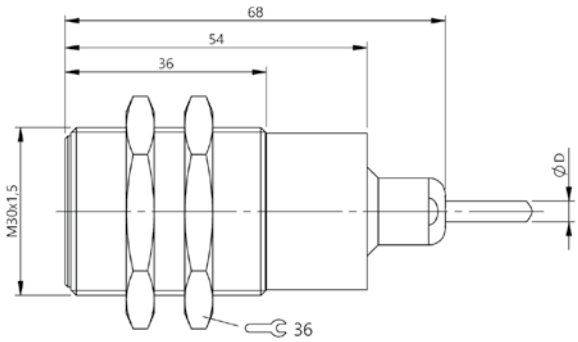

BES05NK

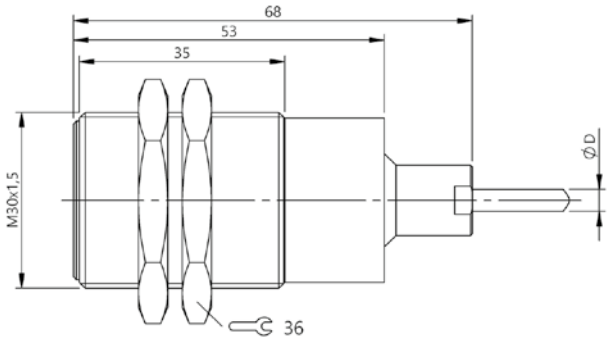

BES05NT

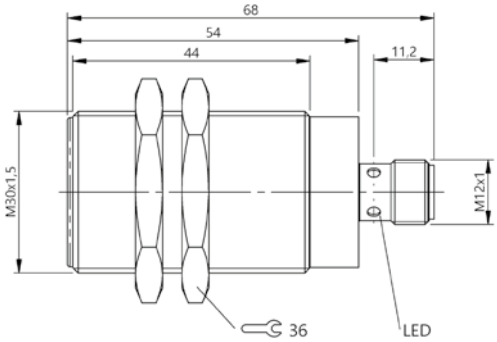

BES05N1

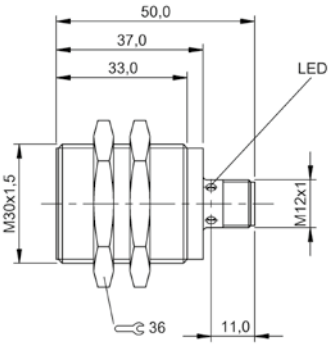

BES02ZY

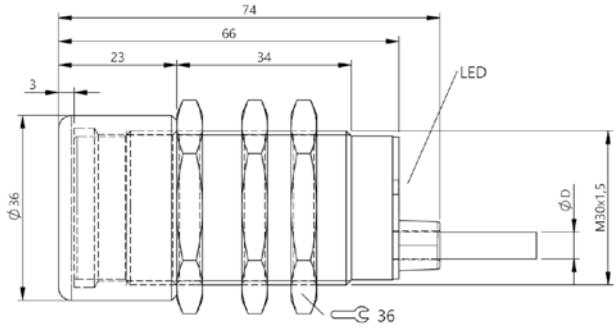

BES05L5, BES05LC

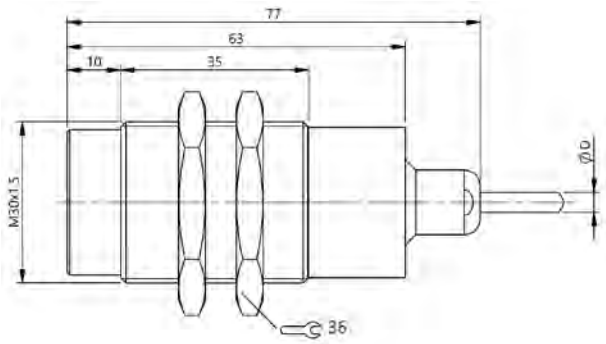

BES05NL

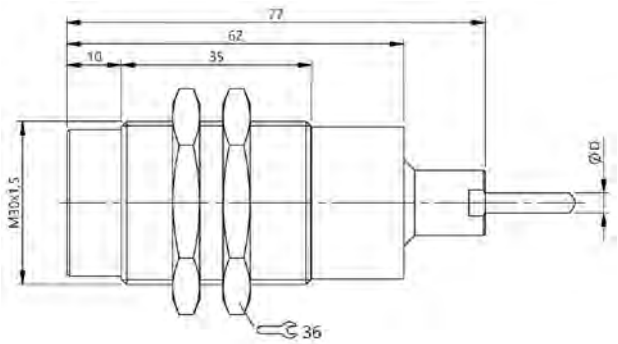

BES05NU

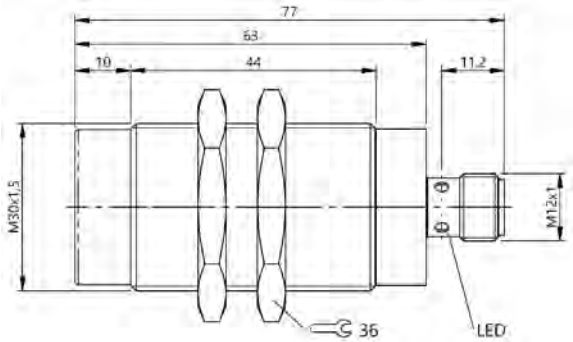

BES05N2

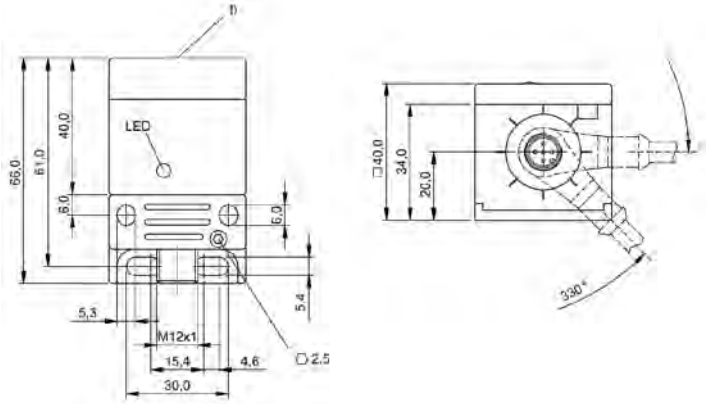

1) Sensing surface

BES02ZZ, BES0300

	BES050N BES G04ED-GNX08B-EP02	BES02L6 BES 516-3005-FO-N-03	BES050P BES M05ED-GNX08B-EP02	
Dimension	Ø 4 x 27 mm	Ø 5 x 24.5 mm	Ø 5 x 27 mm	
Style	D4.0	M5x0.5	M5x0.5	
Installation	flush	flush	flush	
Range	0.8 mm	0.8 mm	0.8 mm	
Interface	NAMUR	NAMUR	NAMUR	
Switching frequency	2500 Hz	2000 Hz	2500 Hz	
Housing material	Stainless steel	Stainless steel	Stainless steel	
Material sensing surface	PBT	PBT	PBT	
Connection	Cable, 2.00 m, PUR	Cable, 3.00 m, PVC	Cable, 2.00 m, PUR	
Operating voltage Ub	7.7...9 VDC	7.7...9 VDC	7.7...9 VDC	
Ambient temperature	-25...70 °C	-25...70 °C	-25...70 °C	
IP rating	IP67	IP67	IP67	
Approval/Conformity	CE, cULus, EAC, WEEE	CE, EAC, WEEE	CE, cULus, EAC, WEEE	
Productview	Page 256	Page 256	Page 256	

	BES02LA BES 516-324-E0-N-03	BES02LE BES 516-325-E3-N-PU-05	BES0568 BES Q08ZC-GNX15B-EP02	BES03M5 BES R04KC-GNX15B-EP02	
	Ø 8 x 45.5 mm	Ø 12 x 30 mm	40 x 8 x 8 mm	16 x 8 x 4 mm	
	M8x1	M12x1	8x8	16x8x4.7	
	flush	flush	flush	flush	
	1.2 mm	2 mm	1.5 mm	1.5 mm	
	NAMUR	NAMUR	NAMUR	NAMUR	
	2000 Hz	1000 Hz	5000 Hz	8000 Hz	
	Stainless steel	Brass, nickel plated	Zinc, Die casting, coated	PA 6, GF30	
	PBT	PA 12	PBT	PA 6	
	Cable, 3.00 m, PVC	Cable, 5.00 m, PUR	Cable, 2.00 m, PUR	Cable, 2.00 m, PUR	
	7.7...9 VDC	7.7...9 VDC	7.7...9 VDC	7.7...9 VDC	
	-25...70 °C	-25...70 °C	-25...70 °C	-25...70 °C	
	IP67	IP67	IP67	IP67	
	CE, EAC, WEEE	CE, EAC, WEEE	CE, cULus, EAC, WEEE	CE, cULus, EAC, WEEE	
	Page 256	Page 256	Page 256	Page 256	

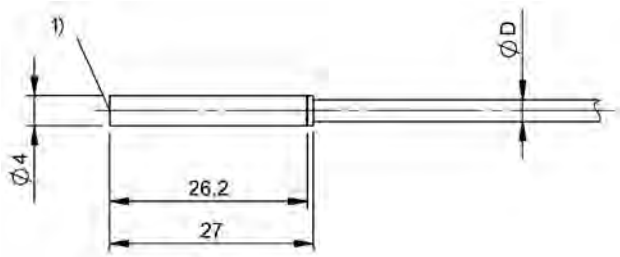

1) Sensing surface

BES050N

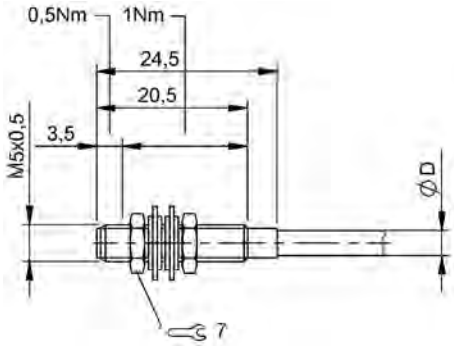

BES02L6

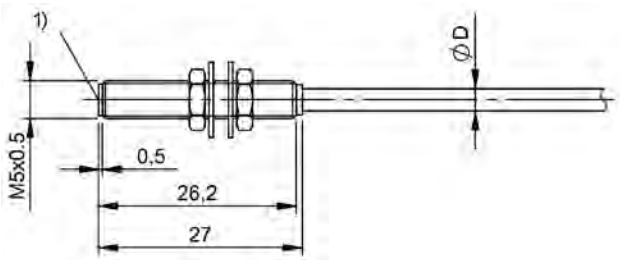

1) Sensing surface

BES050P

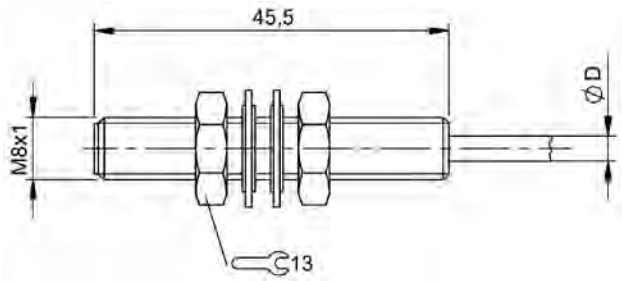

BES02LA

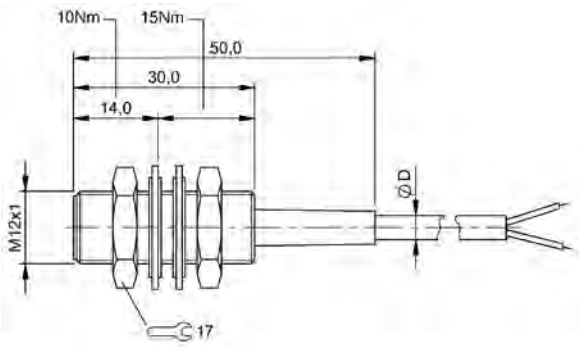

BES02LE

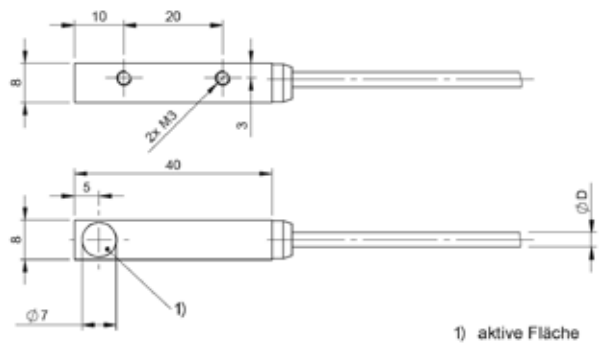

1) Sensing surface

BES0568

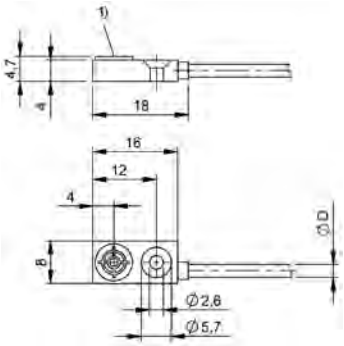

1) Sensing surface

BES03M5

PNP normally open	**BES03JA** BES IKVS-010.23-G-S4	**BES03JC** BES IKVS-015.23-G-S4	
Dimension	60 x 35 x 20 mm	60 x 35 x 20 mm	
Style	block style	block style	
Pass-through	10.1 mm	15.1 mm	
Target size min.	Ball D = 2 mm	Ball D = 3 mm	
Range	—	—	
Switching frequency	16 Hz	16 Hz	
Housing material	Plastic	Plastic	
Material sensing surface	Plastic	Plastic	
Connection	Connector, M12x1 connector, 4-pin	Connector, M12x1 connector, 4-pin	
Operating voltage Ub	10...30 VDC	10...30 VDC	
Ambient temperature	-25...70 °C	-25...70 °C	
Protection degree	IP65	IP65	
Approval/Conformity	CE, EAC	CE, EAC	
Productview	Page 260	Page 260	

	BES03JH BES IKVS-025.23-G-S4	BES0429 BES Z06K-PSC16F-BP00,1-GS04	BES0428 BES Z06K-PSC16F-S49G	
	60 x 35 x 20 mm	78.5 x 17 x 11.9 mm	78.5 x 17 x 11.9 mm	
	block style	block style	block style	
	25.1 mm	—	—	
	Ball D = 4 mm	M3x5 screw	M3x5 screw	
	—	16 mm	16 mm	
	16 Hz	10 Hz	10 Hz	
	Plastic	PA 6.6	PA 6.6	
	Plastic	—	—	
	Connector, M12x1 connector, 4-pin	Cable with connector, M12x1 connector, 4-pin, 0.10 m, PUR	Connector, M8x1 connector, 3-pin	
	10...30 VDC	10...30 VDC	10...30 VDC	
	-25...70 °C	-25...70 °C	-25...70 °C	
	IP65	IP67	IP67	
	CE, EAC	CE, EAC	CE, EAC	
	Page 260	Page 261	Page 261	

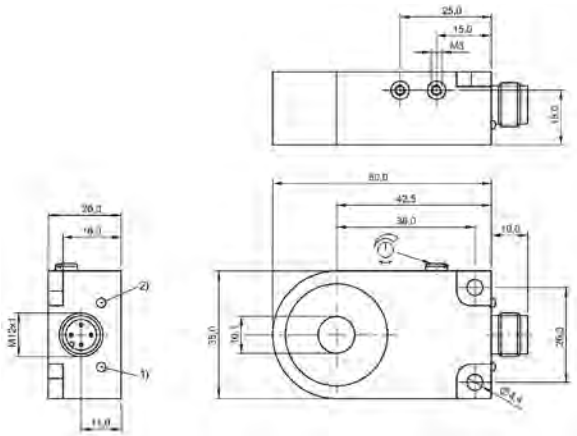

1) LED function indicator, 2) LED operating voltage

BES03JA

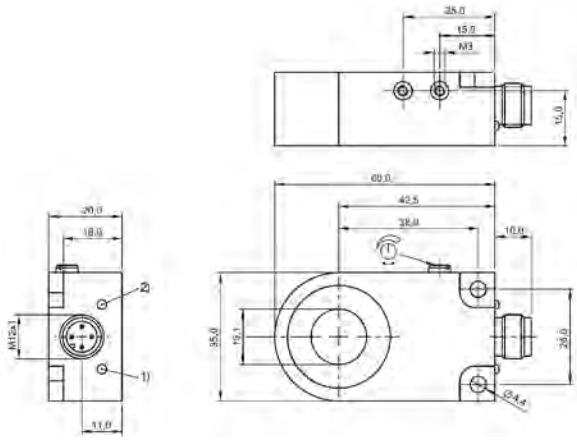

1) LED function indicator, 2) LED operating voltage

BES03JC

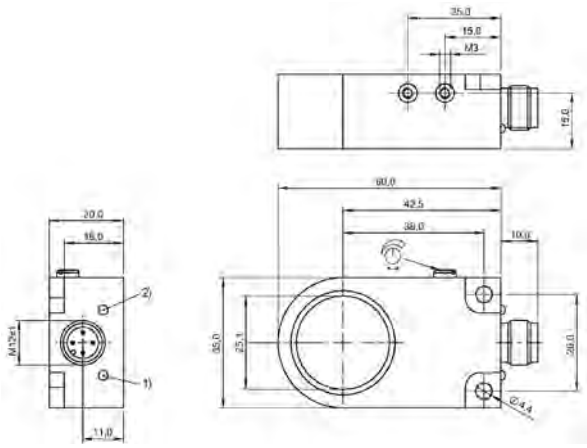

1) LED function indicator, 2) LED operating voltage

BES03JH

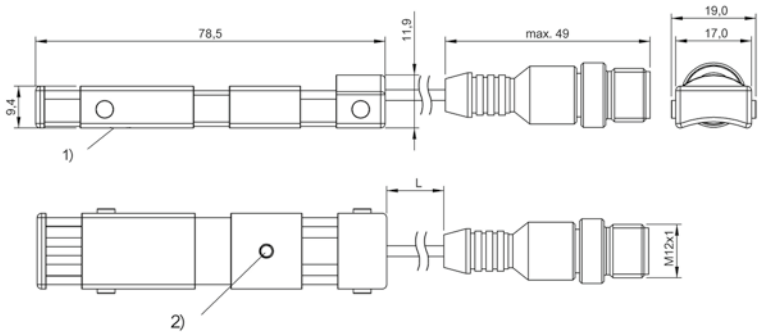

1) Sensing surface, 2) LED yellow

BES0429

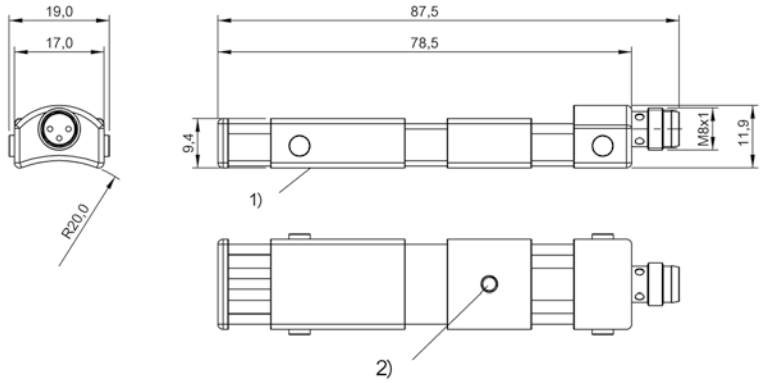

BES0428

	BAW000J BAW G06EE-UAF20B-EP03-K	BAW000T BAW M08EI-UAD15B-BP03	
Dimension	Ø 6.5 x 30.5 mm	Ø 8 x 51.5 mm	
Style	D6.5	M8x1	
Installation	flush	flush	
Range	0.5...2 mm	0.5...1.5 mm	
Interface	—	—	
Analog output	Analog, voltage 0...10 V Analog, temperature	Analog, voltage 0...10 V	
Output characteristic	falling on approach	falling on approach	
Limit frequency –3 dB	1000 Hz	1000 Hz	
Switching output	—	—	
Switching frequency	—	—	
Repeat accuracy per BWN	±10 µm	±8 µm	
Non-linearity max.	±45 µm	±30 µm	
Housing material	Stainless steel	Stainless steel	
Material sensing surface	PBT	PBT	
Connection	Cable, 3.00 m, PUR	Cable, 3.00 m, PUR	
Operating voltage Ub	21.6...26.4 VDC	15...30 VDC	
Ambient temperature	10...60 °C	-10...70 °C	
Pressure rating max.	—	—	
IP rating	IP67	IP67	
Approval/Conformity	CE, cULus, EAC, WEEE	CE, cULus, EAC, WEEE	
Productview	Page 270	Page 270	

	BAW0040 BAW Z08E0-UAD20B-S04G-H11	BAW004K BAW M12ME-UAC35C-S04G	BAW006A BAW M12MF-IAC35C-S04G	BAW0069 BAW M12MF-ICC35C-S04G
	Ø 12 x 78 mm	Ø 12 x 45 mm	Ø 12 x 45 mm	Ø 12 x 45 mm
	M12x1	M12x1	M12x1	M12x1
	flush	flush	flush	flush
	0.5...2 mm	0.2...3.5 mm	0.2...3.5 mm	0.2...3.5 mm
	—	—	—	—
	Analog, voltage 0...10 V	Analog, voltage 0...10 V	Analog, current 0…20 mA	Analog, current 4…20 mA
	falling on approach	falling on approach	falling on approach	falling on approach
	1000 Hz	1000 Hz	1000 Hz	1000 Hz
	—	—	—	—
	—	—	—	—
	±8 µm	±7 µm	±7 µm	±7 µm
	±45 µm	±35 µm	±53 µm	±53 µm
	Stainless steel	Brass, Nickel-free coated	Brass, Nickel-free coated	Brass, Nickel-free coated
	Ceramic	PBT	PBT	PBT
	Connector, M12x1-Male, 3-pin	Connector, M12x1-Male, 4-pin	Connector, M12x1-Male, 4-pin	Connector, M12x1-Male, 4-pin
	15...30 VDC	15...30 VDC	16...30 VDC	16...30 VDC
	-25...85 °C	-40...80 °C	-40...80 °C	-40...80 °C
	500 bar	—	—	—
	IP68	IP67	IP67	IP67
	CE, cULus, EAC, WEEE	CE, cULus, EAC, WEEE	CE, cULus, EAC, WEEE	CE, cULus, EAC, WEEE
	Page 270	Page 270	Page 270	Page 270

	BAW004M BAW M12MI-BLC35C-S04G	BAW004H BAW M12ME-UAC70G-S04G
Dimension	Ø 12 x 65 mm	Ø 12 x 50 mm
Style	M12x1	M12x1
Installation	flush	non-flush
Range	0.2...3.5 mm	0.2...7 mm
Interface	IO-Link 1.1 12 bits	—
Analog output	—	Analog, voltage 0...10 V
Output characteristic	falling on approach	falling on approach
Limit frequency –3 dB	1000 Hz	1000 Hz
Switching output	—	—
Switching frequency	—	—
Repeat accuracy per BWN	±7 µm	±7 µm
Non-linearity max.	±35 µm	±70 µm
Housing material	Brass, Nickel-free coated	Brass, Nickel-free coated
Material sensing surface	PBT	LCP
Connection	Connector, M12x1-Male, 4-pin	Connector, M12x1-Male, 4-pin
Operating voltage Ub	18...30 VDC	15...30 VDC
Ambient temperature	-40...80 °C	-40...80 °C
Pressure rating max.	—	—
IP rating	IP67	IP67
Approval/Conformity	CE, cULus, EAC, WEEE	CE, cULus, EAC, WEEE
Productview	Page 270	Page 270

	BAW0056 BAW M12MH-BLC70G-S04G	BAW0011 BAW M12ME-UAD50B-BP01	BAW001T BAW M18ME-ICC50B-BP03	BAW0026 BAW M18ME-UAE50B-S04G-K
	Ø 12 x 65 mm	Ø 12 x 30 mm	Ø 18 x 36 mm	Ø 18 x 44.5 mm
	M12x1	M12x1	M18x1	M18x1
	non-flush	quasi-flush	flush	flush
	0.2...7 mm	1...5 mm	1...5 mm	1...5 mm
	IO-Link 1.1 12 bits	—	—	—
	—	Analog, voltage 0...10 V Analog, temperature	Analog, current 4…20 mA	Analog, voltage 0…10 V Analog, temperature
	falling on approach	falling on approach	falling on approach	falling on approach
	1000 Hz	1000 Hz	500 Hz	500 Hz
	—	—	—	—
	—	—	—	—
	±14 µm	±10 µm	±8 µm	±8 µm
	±70 µm	±160 µm	±120 µm	±120 µm
	Brass, Nickel-free coated	Brass, nickel plated	Brass, nickel plated	Brass, nickel plated
	LCP	PA 12	PBT	PBT
	Connector, M12x1-Male, 4-pin	Cable, 1.00 m, PUR	Cable, 3.00 m, PUR	Connector, M12x1-Male, 4-pin
	18...30 VDC	15...30 VDC	15...30 VDC	21.6...26.4 VDC
	-40...80 °C	0...60 °C	-10...70 °C	-10...70 °C
	—	—	—	—
	IP67	IP67	IP67	IP67
	CE, cULus, EAC, WEEE	CE, cULus, EAC, WEEE	CE, cULus, EAC, WEEE	CE, cULus, EAC, WEEE
	Page 270	Page 271	Page 271	Page 271

	BAW002F BAW M18MI-BLC50B-S04G	BAW002H BAW M18MI-IAC50B-S04G	
Dimension	Ø 18 x 65 mm	Ø 18 x 65 mm	
Style	M18x1	M18x1	
Installation	flush	flush	
Range	1...5 mm	1...5 mm	
Interface	IO-Link 1.1 10 bit	—	
Analog output	—	Analog, current 0…20 mA	
Output characteristic	falling on approach	falling on approach	
Limit frequency –3 dB	500 Hz	500 Hz	
Switching output	—	—	
Switching frequency	—	—	
Repeat accuracy per BWN	±10 µm	±8 µm	
Non-linearity max.	±120 µm	±120 µm	
Housing material	Brass, nickel plated	Brass, nickel plated	
Material sensing surface	PBT	PBT	
Connection	Connector, M12x1-Male, 3-pin	Connector, M12x1-Male, 3-pin	
Operating voltage Ub	18...30 VDC	10...30 VDC	
Ambient temperature	-10...70 °C	-10...70 °C	
Pressure rating max.	—	—	
IP rating	IP67	IP67	
Approval/Conformity	CE, cULus, EAC, WEEE	CE, cULus, EAC, WEEE	
Productview	Page 271	Page 271	

	BAW0029 BAW M18MG-UAC16F-S04G-K	BAW005Y BAW M30EE-ICD10B-S04G-L01	BAW002W BAW M30ME-UAC10B-S04G	BAW002Y BAW M30ME-UAC15F-S04G
	Ø 18 x 65 mm	Ø 30 x 44.5 mm	Ø 30 x 44.5 mm	Ø 30 x 57 mm
	M18x1	M30x1.5	M30x1.5	M30x1.5
	non-flush	flush	flush	non-flush
	4...16 mm	2...10 mm	2...10 mm	3...15 mm
	—	—	—	—
	Analog, voltage 0…10 V Analog, temperature	Analog, current 4…20 mA	Analog, voltage 0...10 V	Analog, voltage 0...10 V
	falling on approach	falling on approach	falling on approach	falling on approach
	500 Hz	500 Hz	500 Hz	350 Hz
	—	—	—	—
	—	—	—	—
	±200 µm	±10 µm	±10 µm	±12 µm
	±360 µm	±300 µm	±240 µm	±360 µm
	Brass, nickel plated	Stainless steel	Brass, nickel plated	Brass, nickel plated
	PBT	PEEK	PBT	PBT
	Connector, M12x1-Male, 4-pin	Connector, M12x1-Male, 3-pin	Connector, M12x1-Male, 3-pin	Connector, M12x1-Male, 3-pin
	15...30 VDC	15...30 VDC	15...30 VDC	15...30 VDC
	10...60 °C	-10...70 °C	-10...70 °C	-10...70 °C
	—	—	—	—
	IP67	IP68	IP67	IP67
	CE, cULus, EAC, WEEE	CE, cULus, EAC, WEEE	CE, cULus, EAC, WEEE	CE, cULus, EAC, WEEE
	Page 271	Page 271	Page 271	Page 271

	BAW005Z BAW R03KC-UAA40B-BP03-505	BAW003E BAW Z01AC-UAD50B-DP03-K	
Dimension	10 x 6 x 30 mm	38.5 x 14 x 17 mm	
Style	block style	block style	
Installation	flush	non-flush	
Range	1...4 mm	1...5 mm	
Interface	—	—	
Analog output	Analog, voltage 0...10 V	Analog, voltage 0…10 V Analog, temperature	
Output characteristic	falling on approach	falling on approach	
Limit frequency –3 dB	1000 Hz	1000 Hz	
Switching output	—	—	
Switching frequency	—	—	
Repeat accuracy per BWN	±35 µm	±10 µm	
Non-linearity max.	±150 µm	±120 µm	
Housing material	PA 6, GF30	Aluminum, Anodized	
Material sensing surface	PA 6, GF30	PA 12	
Connection	Cable, 3.00 m, PUR	Cable, 3.00 m, PUR	
Operating voltage Ub	21.6...26.4 VDC	15...30 VDC	
Ambient temperature	0...70 °C	-10...60 °C	
Pressure rating max.	—	—	
IP rating	IP67	IP67	
Approval/Conformity	CE, cULus, EAC, WEEE	CE, cULus, EAC, WEEE	
Productview	Page 272	Page 272	

	BAW003W BAW Z05AC-BLD50B-BP00,75-GS04	BAW0034 BAW R06AC-UAF20B-S49G		
	30 x 38.5 x 16.5 mm	30 x 20 x 8 mm		
	block style	block style		
	non-flush	flush		
	1...5 mm	0.5...2 mm		
	IO-Link 1.1 10 bit	—		
	—	Analog, voltage 0...10 V		
	falling on approach	falling on approach		
	200 Hz	1000 Hz		
	—	—		
	—	—		
	±12 µm	±12 µm		
	±150 µm	±45 µm		
	Aluminum, Anodized	Aluminum, Anodized		
	LCP	PBT		
	Cable with connector, M12x1-Male, 4-pin, 0.75 m, PUR	Connector, M8x1-Male, 3-pin		
	18...30 VDC	21.6...26.4 VDC		
	-10...60 °C	-10...70 °C		
	—	—		
	IP67	IP67		
	CE, cULus, EAC, WEEE	CE, cULus, EAC, WEEE		
	Page 272	Page 272		

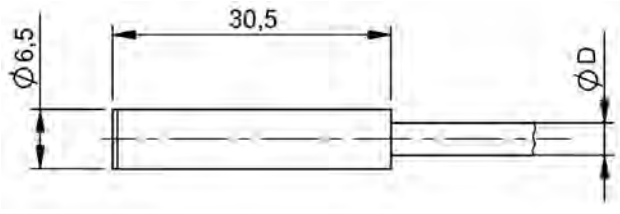

BAW000J

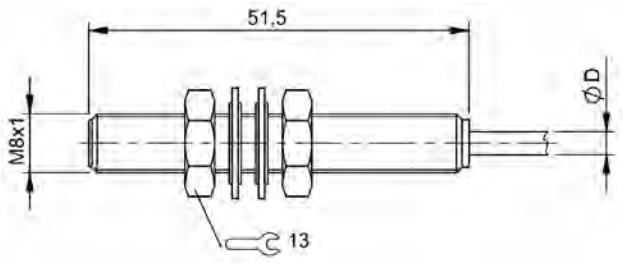

BAW000T

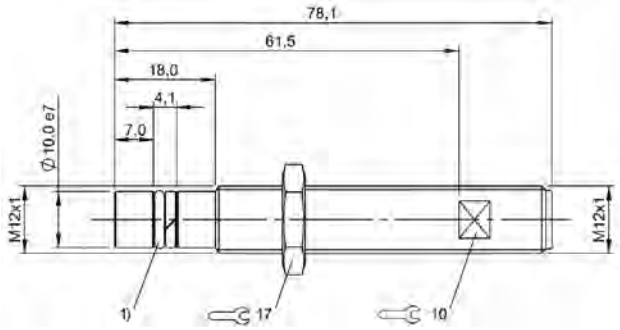

1) O-Ring with thrust ring

BAW0040

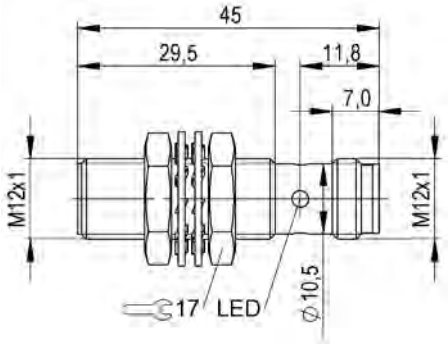

BAW004K

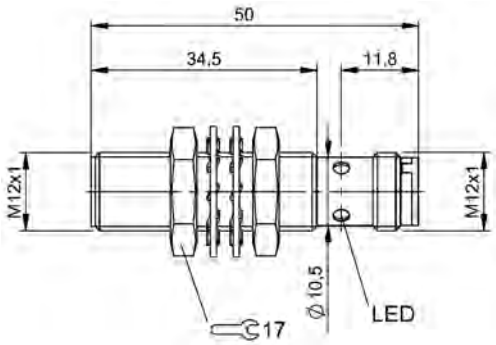

BAW006A, BAW0069

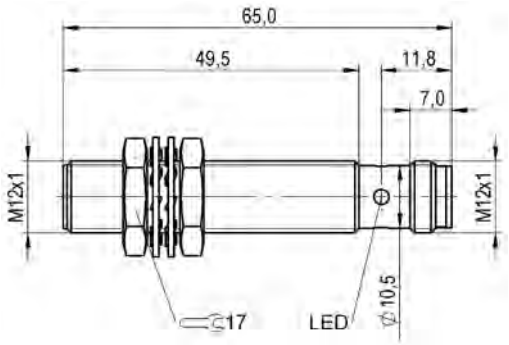

BAW004M

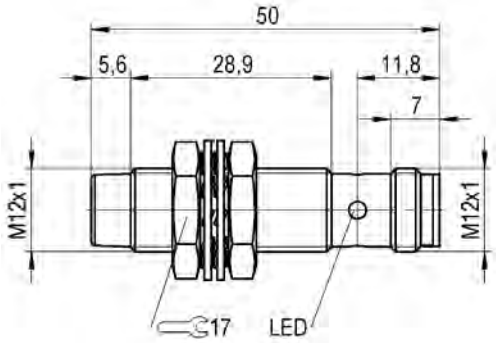

BAW004H

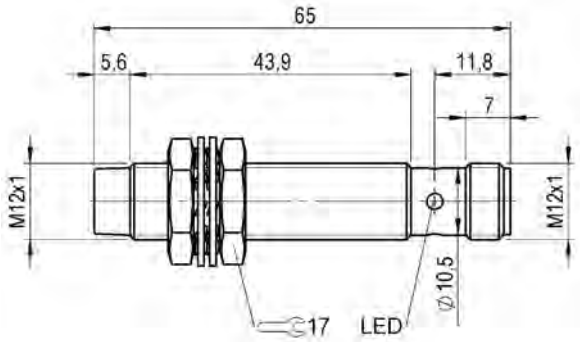

BAW0056

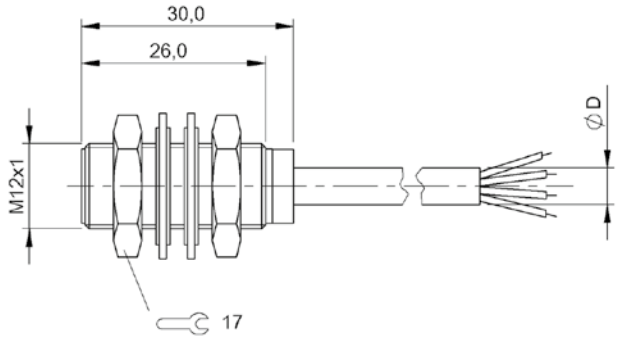

BAW0011

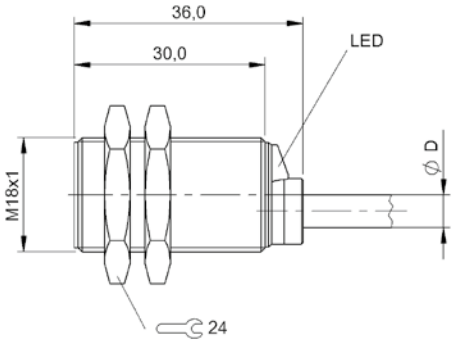

BAW001T

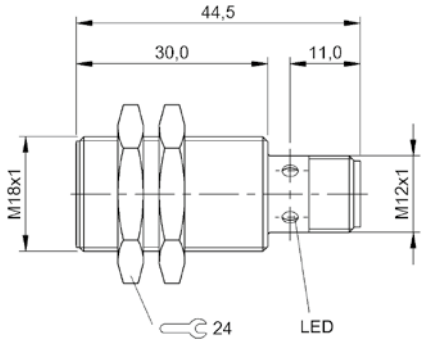

BAW0026

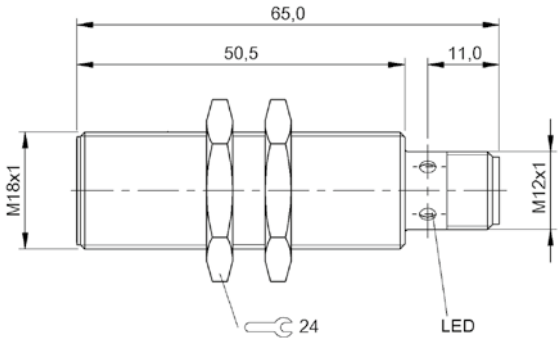

BAW002F, BAW002H

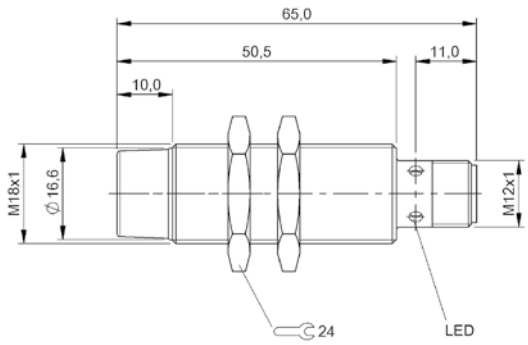

BAW0029

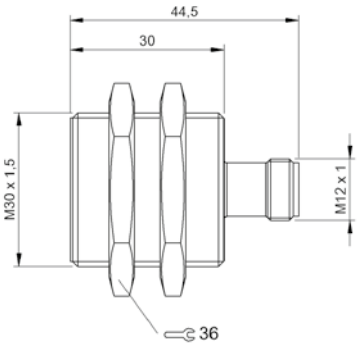

BAW005Y

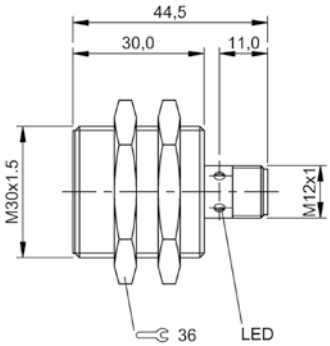

BAW002W

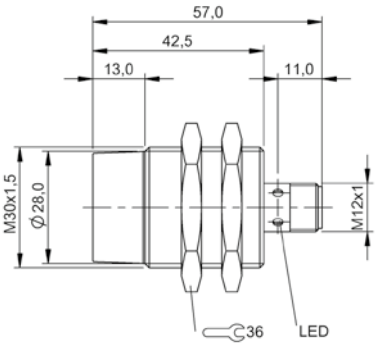

BAW002Y

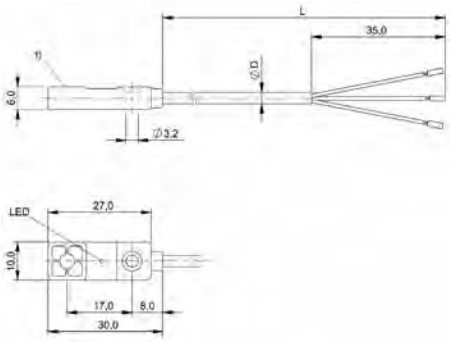

1) Sensing surface

BAW005Z

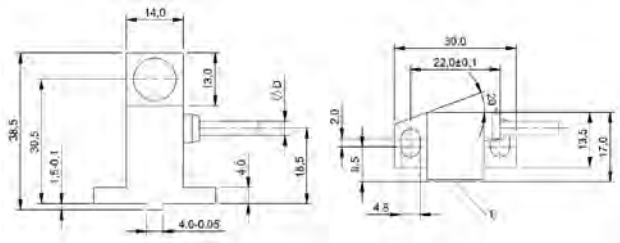

1) Sensing surface

BAW003E

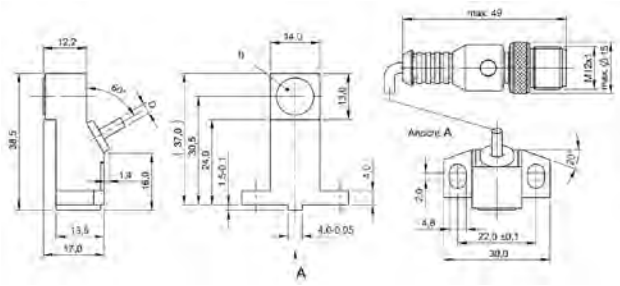

1) Sensing surface

BAW003W

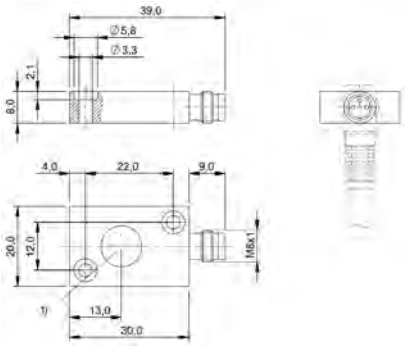

1) Sensing surface

BAW0034

	BIP001U BIP AD2-T017-01-EB02	BIP001W BIP CD2-T017-01-EB02
Dimension	35 x 35 x 31 mm	—
Style	block style	—
Connection	Cable, 2.00 m, PUR	Cable, 2.00 m, PUR
Cable shield	yes	yes
Housing material	PA	PA
Measuring range	0...17 mm	0...17 mm
Interface	—	—
Analog output	Analog, voltage 0...10 V	Analog, current 4…20 mA
Output characteristic	Adjustable	Adjustable
Repeat accuracy per BWN	±50 µm	±50 µm
Non-linearity max.	±250 µm	±250 µm
Operating voltage Ub	15...30 VDC	15...30 VDC
Ambient temperature	-25...70 °C	-25...70 °C
IP rating	IP67	IP67
Approval/Conformity	CE, cURus, EAC, WEEE	CE, cURus, EAC, WEEE
Productview	Page 280	Page 280

	BIP001Y BIP LD2-T017-01-EP00,5-S4	BIP001K BIP AD2-T017-04-BP02	BIP001L BIP CD2-T017-04-BP02	BIP001M BIP LD2-T017-04-BP00,5-S4
	35 x 35 x 31 mm	30 x 18 x 40.5 mm	30 x 18 x 40.5 mm	30 x 18 x 40.5 mm
	block style	block style	block style	block style
	Cable with connector, M12x1-Male, 3-pin, 0.5 m, PUR	Cable, 2 m, PUR	Cable, 2 m, PUR	Cable with connector, M12x1 connector, 3-pin, 0.5 m, PUR
	no	yes	yes	yes
	PA	PA	PA	PA
	0...17 mm	0...17 mm	0...17 mm	0...17 mm
	IO-Link 1.1	—	—	IO-Link 1.1
	—	Analog, voltage 0...10 V	Analog, current 4...20 mA	—
	—	Adjustable	Adjustable	—
	±50 µm	±50 µm	±50 µm	±40 µm
	±250 µm	±250 µm	±250 µm	±250 µm
	18...30 VDC	15...30 VDC	15...30 VDC	18...30 VDC
	-25...70 °C	-25...70 °C	-25...70 °C, Temperature drift is between -10…70 °C	-25...70 °C
	IP67	IP67	IP67	IP67
	CE, cURus, EAC, WEEE	CE, cURus, EAC	CE, cURus, EAC	CE, cURus, EAC
	Page 280	Page 281	Page 281	Page 281

	BIP000L BIP AD2-T030-02-S4	BIP0002 BIP AD2-B040-02-S4	
Dimension	52 x 30 x 16 mm	70 x 30 x 16 mm	
Style	block style	block style	
Connection	Connector, M12x1-Male, 3-pin	Connector, M12x1-Male, 3-pin	
Cable shield	—	—	
Housing material	PA	PA	
Measuring range	0...30 mm	0...40 mm	
Interface	—	—	
Analog output	Analog, voltage 0...10 V	Analog, voltage 0...10 V	
Output characteristic	Adjustable	Adjustable	
Repeat accuracy per BWN	±100 µm	±100 µm	
Non-linearity max.	±500 µm	±500 µm	
Operating voltage Ub	15...30 VDC	15...30 VDC	
Ambient temperature	-25...85 °C	-25...85 °C	
IP rating	IP67	IP67	
Approval/Conformity	CE, cURus, EAC, WEEE	CE, cURus, EAC, WEEE	
Productview	Page 280	Page 280	

	BIP0005 BIP CD2-B040-02-S4	BIP0004 BIP LD2-T040-02-S4	BIP000M BIP ED2-B048-03-S75	BIP001J BIP LD2-T048-03-S75
	70 x 30 x 16 mm	70 x 30 x 16 mm	64 x 21 x 22 mm	64 x 21 x 22 mm
	block style	block style	block style	block style
	Connector, M12x1-Male, 3-pin	Connector, M12x1-Male, 3-pin	Connector, M8x1-Male, 4-pin	Connector, M8x1-Male, 4-pin
	—	—	—	—
	PA	PA	PBT	PBT
	0...40 mm	0...40 mm	0...48 mm	0...48 mm
	—	IO-Link 1.0	—	IO-Link 1.1
	Analog, current 4…20 mA	—	Analog, voltage 0...10 V Analog, current 4...20 mA	—
	Adjustable	—	Adjustable	—
	±100 µm	±100 µm	±80 µm	±80 µm
	±500 µm	±500 µm	±400 µm	±400 µm
	15...30 VDC	18...30 VDC	16...30 VDC	18...30 VDC
	-25...85 °C	-25...85 °C	-25...85 °C	-25...85 °C
	IP67	IP67	IP67	IP67
	CE, cURus, EAC, WEEE	CE, cURus, EAC, WEEE	CE, cURus, EAC, WEEE	CE, cURus, EAC, WEEE
	Page 280	Page 280	Page 280	Page 280

	BIP000C BIP ED2-B070-03-S75	BIP001H BIP LD2-T070-03-S75	
Dimension	92.5 x 21 x 22 mm	92.5 x 21 x 22 mm	
Style	block style	block style	
Connection	Connector, M8x1-Male, 4-pin	Connector, M8x1-Male, 4-pin	
Cable shield	—	—	
Housing material	PBT	PBT	
Measuring range	0...70 mm	0...70 mm	
Interface	—	IO-Link 1.1	
Analog output	Analog, voltage 0...10 V Analog, current 4...20 mA	—	
Output characteristic	Adjustable	—	
Repeat accuracy per BWN	±80 µm	±80 µm	
Non-linearity max.	±300 µm	±300 µm	
Operating voltage Ub	16...30 VDC	18...30 VDC	
Ambient temperature	-25...85 °C	-25...85 °C	
IP rating	IP67	IP67	
Approval/Conformity	CE, cURus, EAC, WEEE	CE, cURus, EAC, WEEE	
Productview	Page 281	Page 281	

	BIP000E BIP ED2-B103-03-S75	BIP0014 BIP LD2-T103-03-S75	BIP000R BIP ED2-B133-03-S75	BIP001F BIP LD2-T133-03-S75
	121 x 21 x 22 mm	121 x 21 x 22 mm	149.5 x 21 x 22 mm	149.5 x 21 x 22 mm
	block style	block style	block style	block style
	Connector, M8x1-Male, 4-pin	Connector, M8x1-Male, 4-pin	Connector, M8x1-Male, 4-pin	Connector, M8x1-Male, 4-pin
	—	—	—	—
	PBT	PBT	PBT	PBT
	0...103 mm	0...103 mm	0...133 mm	0...133 mm
	—	IO-Link 1.1	—	IO-Link 1.1
	Analog, voltage 0...10 V Analog, current 4...20 mA	—	Analog, voltage 0...10 V Analog, current 4...20 mA	—
	Adjustable	—	Adjustable	—
	±80 µm	±80 µm	±80 µm	±80 µm
	±300 µm	±300 µm	±400 µm	±400 µm
	16...30 VDC	18...30 VDC	16...30 VDC	18...30 VDC
	-25...85 °C	-25...85 °C	-25...85 °C	-25...85 °C
	IP67	IP67	IP67	IP67
	CE, cURus, EAC, WEEE	CE, cURus, EAC, WEEE	CE, cURus, EAC, WEEE	CE, cURus, EAC, WEEE
	Page 281	Page 281	Page 281	Page 281

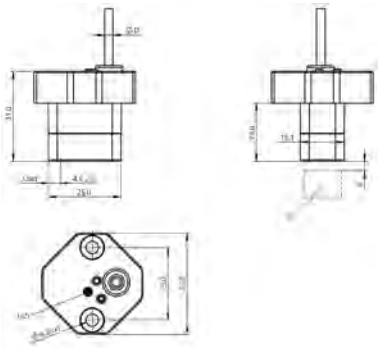

1) LED function indicator, 2) LED function indicator, 3) Teach-In button

BIP001U, BIP001W

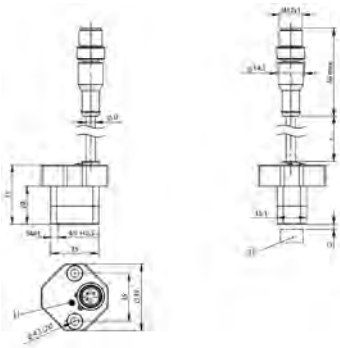

1) LED function indicator, 3) Encoder

BIP001Y

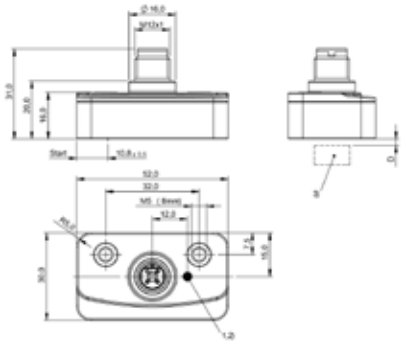

1) LED function indicator, 2) LED function indicator, 3) Encoder

BIP000L

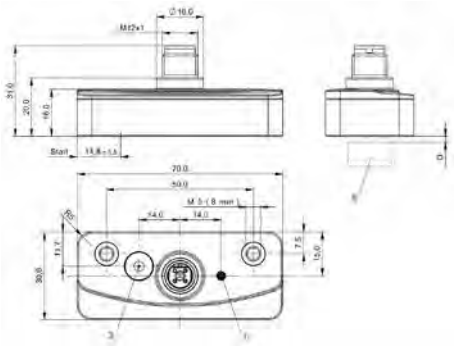

1) LED function indicator, 3) Teach-In button, 4) Encoder

BIP0002

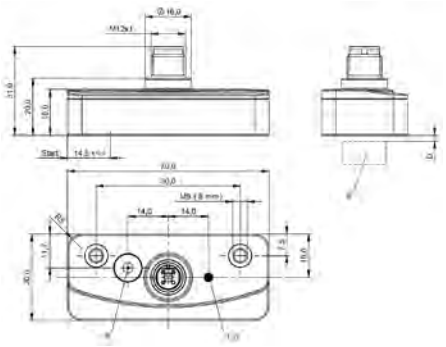

1) LED function indicator, 2) LED function indicator, 3) Teach-In button, 4) Encoder

BIP0005

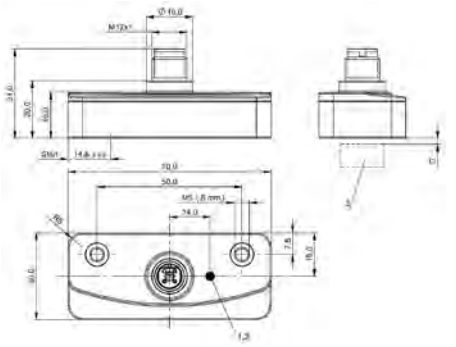

1) LED function indicator, 2) LED function indicator, 3) Encoder

BIP0004

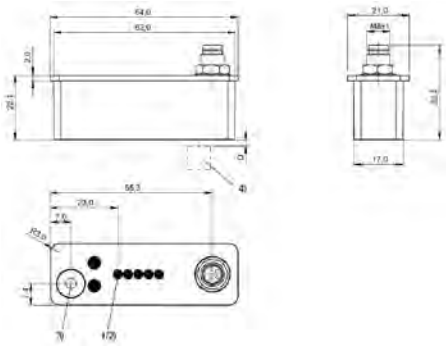

1) LED function indicator, 2) LED function indicator, 3) Teach-In button, 4) Encoder

BIP000M

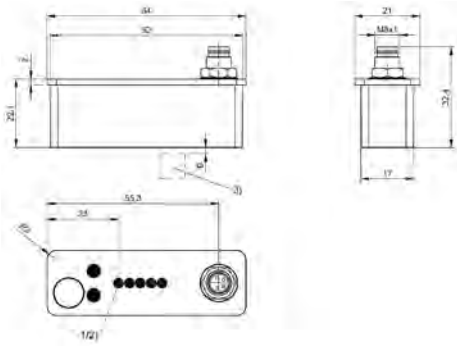

1) LED Power, 2) LED function indicator, 3) Encoder

BIP001J

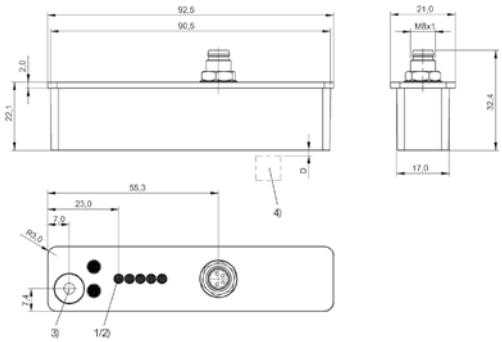

1) LED function indicator, 2) LED function indicator, 3) Teach-In button, 4) Encoder

BIP000C

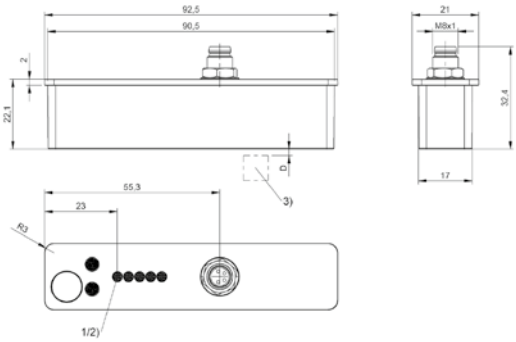

1) LED Power, 2) LED function indicator, 3) Encoder

BIP001H

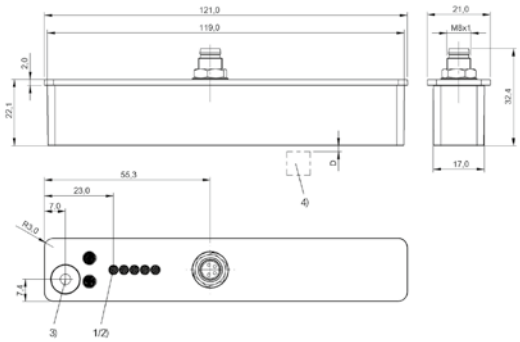

1) LED function indicator, 2) LED function indicator, 3) Teach-In button, 4) Encoder

BIP000E

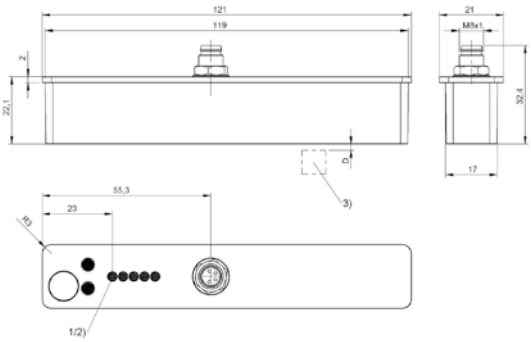

1) LED Power, 2) LED function indicator, 3) Encoder

BIP0014

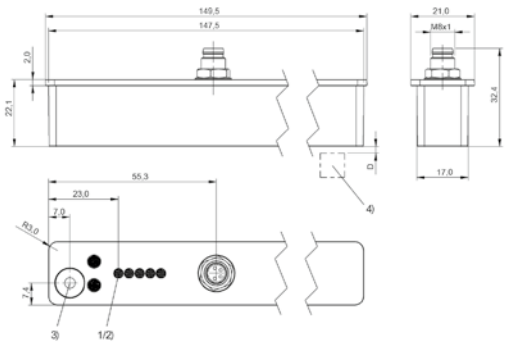

1) LED function indicator, 2) LED function indicator, 3) Teach-In button, 4) Encoder

BIP000R

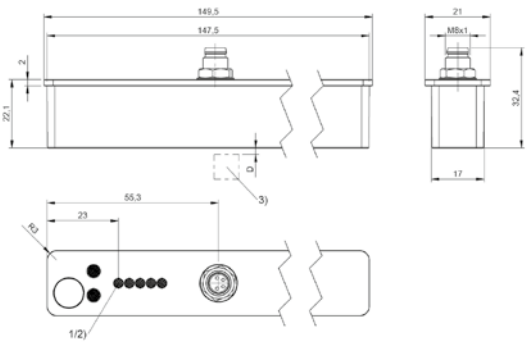

1) LED Power, 2) LED function indicator, 3) Encoder

BIP001F

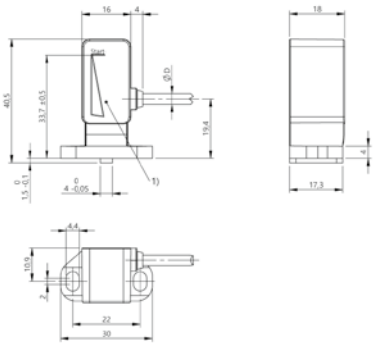

1) Sensing surface

BIP001K, BIP001L

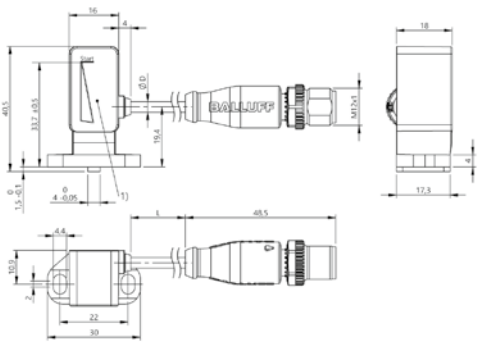

1) Sensing surface

BIP001M

Features

- High resolution and repeatability
- Insensitive to shock, vibration and noise fields
- Absolute analog output signal rising or falling
- Guided sensor element
- 32 kHz sampling rate
- Potential-free
- Non-contact operating principle

	BIW1-A310 BIW1-**A**310-M_ _ _ _-P1-S115	
Analog output U_A / I_A	A (0...+10 V)	
Repeat accuracy	10 µm	
Sampling rate	typ. 32 kHz	
Non-linearity max.	≤ 0.02%	
Operating voltage	18...30 V DC	
Operating temperature	–20...+85 °C	
Degree of protection as per IEC 60529	IP 54	
Approval/Conformity	cULus, CE	
Housing material	Anodized aluminum	
Connection	M12 connector, 8-pin standard	

Calculation example:
BIW1-...-M0100-P1-S115
Nominal length 100
A = 200
B = 110
C = 80

Ordering example:

BIW1-_ 310-M_ _ _ _-P1-S115

Output signal

A	0...+10 V
E	4...20 mA
C	0...20 mA
G	–10...+10 V

Standard nominal length [mm]

0075	0100	0130	0150
0175	0225	0260	0300
0360	0375	0400	0450
0500	0600	0650	0750
			0775

	BIW1-E310 BIW1-**E**310-M_ _ _ _-P1-S115	BIW1-C310 BIW1-**C**310-M_ _ _ _-P1-S115	BIW1-G310 BIW1-**G**310-M_ _ _ _-P1-S115
	E (4...20 mA)	C (0...20 mA)	G (–10...+10 V)
	10 µm	10 µm	10 µm
	typ. 32 kHz	typ. 32 kHz	typ. 32 kHz
	≤ 0.02%	≤ 0.02%	≤ 0.02%
	18...30 V DC	18...30 V DC	18...30 V DC
	–20...+85 °C	–20...+85 °C	–20...+85 °C
	IP 54	IP 54	IP 54
	cULus, CE	cULus, CE	cULus, CE
	Anodized aluminum	Anodized aluminum	Anodized aluminum
	M12 connector, 8-pin standard	M12 connector, 8-pin standard	M12 connector, 8-pin standard

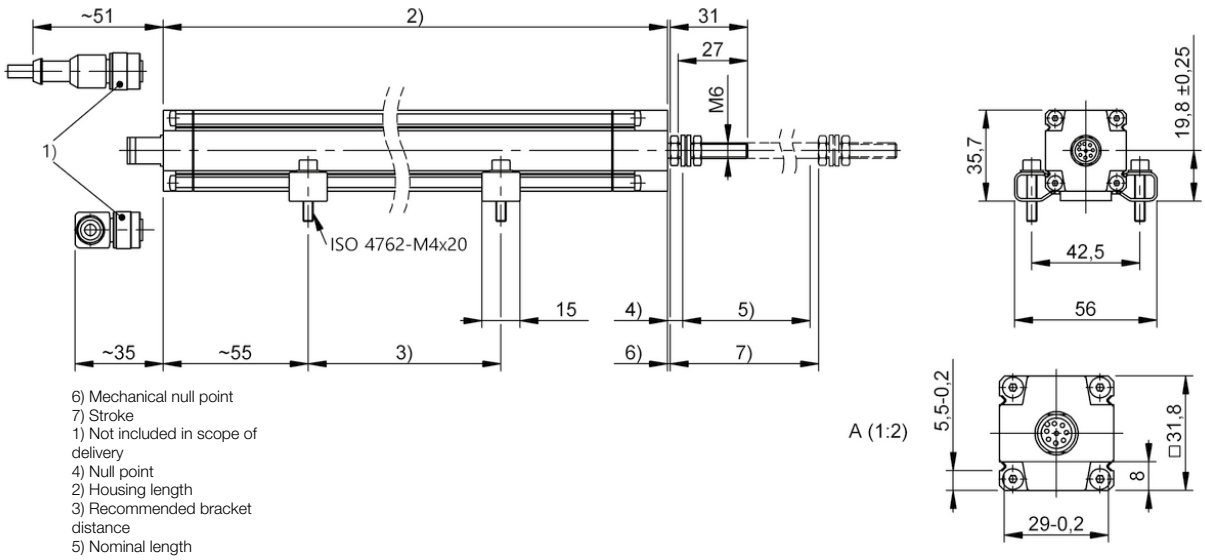

6) Mechanical null point
7) Stroke
1) Not included in scope of delivery
4) Null point
2) Housing length
3) Recommended bracket distance
5) Nominal length

Object and level detection with patented technology

CAPACITIVE SENSORS

Balluff's capacitive sensors detect fluids, granulates and powders in direct contact or through a non-metallic container wall. As stick-on sensors, they fit flexibly to the housing shape and are easily removable. Moisture, foam and deposits of any kind are compensated for, even through glass and plastic walls up to 10 mm thick. This makes them ideal as level detection sensors for conductive media while guaranteeing high application security.

Our capacitive sensors are available in various form factors, even especially small ones.

The most important benefits

- Contact-free and therefore wear-free
- Bounceless output signal
- Foam and residue compensation

PNP normally open	BCS001L BCS G06T4E1-PSM15C-EP02	BCS001R BCS G06T4D2-PSM15C-S49G	
Dimension	Ø 6.5 x 42 mm	Ø 6.5 x 54 mm	
Series	G06	G06	
Thread (A)	—	—	
Installation	for flush mounting	for flush mounting	
Connection	Cable, 2.00 m, PUR	Connector, M8x1-Male, 3-pin	
Switching frequency	100 Hz	100 Hz	
Interface	—	—	
Range	0.1...1.5 mm	0.1...1.5 mm	
Sensitivity	Switching distance adjustable	Switching distance adjustable	
Housing material	Stainless steel (1.4301)	Stainless steel (1.4301)	
Material sensing surface	PTFE	PTFE	
Ambient temperature	-10...70 °C	-10...70 °C	
Operating voltage Ub	11...30 VDC	11...30 VDC	
Approval/Conformity	CE, cULus, EAC, WEEE	CE, cULus, EAC, WEEE	
IP rating	IP65	IP65	
Productview	Page 296	Page 296	

	BCS0026 BCS M08T4E1-PSM15C-EP02	BCS002A BCS M08T4E2-PSM15C-S49G	BCS002T BCS G10T4H-PSM40C-EP02	BCS00PU BCS M12BBI1-PSC40D-EP02
	Ø 8 x 42 mm	Ø 8 x 54 mm	Ø 10 x 50 mm	Ø 12 x 61 mm
	M08	M08	G10	M12
	M8x1	M8x1	—	M12x1
	for flush mounting	for flush mounting	for flush mounting	for flush mounting
	Cable, 2.00 m, PUR	Connector, M8x1-Male, 3-pin	Cable, 2.00 m, PUR	Cable, 2.00 m, PUR
	100 Hz	100 Hz	100 Hz	100 Hz
	—	—	—	—
	0.1...1.5 mm	0.1...1.5 mm	1...4 mm	1...4 mm
	Switching distance adjustable	Switching distance adjustable	Switching distance adjustable	Switching distance adjustable
	Stainless steel (1.4301)	Stainless steel (1.4301)	Stainless steel (1.4301)	PBT
	PTFE	PTFE	PTFE	PBT
	-10...70 °C	-10...70 °C	-30...70 °C	-25...85 °C
	11...30 VDC	11...30 VDC	12...35 VDC	10...30 VDC
	CE, cULus, EAC, WEEE	CE, cULus, EAC, WEEE	CE, cULus, EAC, WEEE	CE, cULus, EAC, WEEE
	IP65	IP65	IP65	IP67
	Page 296	Page 296	Page 296	Page 296

PNP normally open	**BCS00PJ** BCS M12BBG2-PSC40D-S04K	**BCS00AU** BCS M12TTG1-PSM40C-ET02	
PNP/NPN normally open/normally closed			
Dimension	Ø 12 x 75 mm	Ø 12 x 50 mm	
Series	M12	M12	
Thread (A)	M12x1	M12x1	
Installation	for flush mounting	for flush mounting	
Connection	Connector, M12x1-Male, 4-pin	Cable, 2.00 m, PUR	
Switching frequency	100 Hz	100 Hz	
Interface	—	—	
Range	1...4 mm	4 mm	
Sensitivity	Switching distance adjustable	—	
Housing material	PBT	PTFE	
Material sensing surface	PBT	PTFE	
Ambient temperature	-25...85 °C	-30...60 °C	
Operating voltage Ub	10...30 VDC	12...35 VDC	
Approval/Conformity	CE, cULus, EAC, WEEE	CE, cULus, EAC, WEEE	
IP rating	IP67	IP65	
Productview	Page 297	Page 297	

	BCS00R4 BCS M12B4I1-PSC40D-EP02	BCS00P0 BCS M12B4G2-PSC40D-S04K		
			BCS017H BCS M12K4G1-GSM50C-EP02	BCS017K BCS M12K4D2-GSM50C-S04G
	Ø 12 x 61 mm	Ø 12 x 75 mm	Ø 12 x 50 mm	Ø 12 x 60 mm
	M12	M12	M12	M12
	M12x1	M12x1	M12x1	M12x1
	for flush mounting	for flush mounting	for flush mounting	for flush mounting
	Cable, 2.00 m, PUR	Connector, M12x1-Male, 3-pin	Cable, 2 m, PUR	Connector, M12x1-Male, 4-pin
	100 Hz	100 Hz	100 Hz	100 Hz
	—	—	—	—
	1...4 mm	1...4 mm	0.5...5 mm	0.5...5 mm
	Switching distance adjustable	Switching distance adjustable	Switching distance teachable	Switching distance teachable
	Stainless steel (1.4305)	Stainless steel (1.4305)	Stainless steel (1.4404)	Stainless steel (1.4404)
	PBT	PBT	PEEK	PEEK
	-25...85 °C	-25...85 °C	-10...80 °C	-10...80 °C
	10...30 VDC	10...30 VDC	12...30 VDC	12...30 VDC
	CE, cULus, EAC, WEEE	CE, cULus, EAC, WEEE	CE, cULus, EAC, WEEE	CE, cULus, EAC, WEEE
	IP67	IP67	IP67	IP67
	Page 297	Page 297	Page 296	Page 296

PNP normally open	**BCS00NZ** BCS M18BBN1-PSC80D-EP02	**BCS00M8** BCS M18BBI3-PSC80D-S04K	
NPN normally open	**BCS00M2** BCS M18BBN1-NSC80D-EP02		
NPN normally closed			
Dimension	Ø 18 x 75 mm	Ø 18 x 88.5 mm	
Series	M18	M18	
Thread (A)	M18x1	M18x1	
Installation	for flush mounting	for flush mounting	
Connection	Cable, 2.00 m, PUR	Connector, M12x1-Male, 3-pin	
Switching frequency	100 Hz	100 Hz	
Interface	—	—	
Range	1...8 mm	1...8 mm	
Sensitivity	Switching distance adjustable	Switching distance adjustable	
Housing material	PBT	PBT	
Material sensing surface	PBT	PBT	
Ambient temperature	-25...85 °C	-25...85 °C	
Operating voltage Ub	10...30 VDC	10...30 VDC	
Approval/Conformity	CE, cULus, EAC, WEEE	CE, cULus, EAC, WEEE	
IP rating	IP67	IP67	
Productview	Page 297	Page 297	

	BCS00MF BCS M18B4I3-PSC80D-S04K	BCS003A BCS D30T401-PSC15C-EP02	BCS00NM BCS M30BBI1-PSC15D-EP02	BCS00NA BCS M30BBI2-PSC15D-S04K
		BCS003F BCS D30T401-NOC15C-EP02		
	Ø 18 x 88.5 mm	Ø 30 x 4 mm	Ø 30 x 65.5 mm	Ø 30 x 79 mm
	M18	D30	M30	M30
	M18x1	—	M30x1.5	M30x1.5
	for flush mounting	for flush mounting	for flush mounting	for flush mounting
	Connector, M12x1-Male, 3-pin	Cable, 2.00 m, PUR	Cable, 2.00 m, PUR	Connector, M12x1-Male, 3-pin
	100 Hz	100 Hz	100 Hz	100 Hz
	—	—	—	—
	1...8 mm	2...15 mm	2...15 mm	2...15 mm
	Switching distance adjustable	Switching distance adjustable	Switching distance adjustable	Switching distance adjustable
	Stainless steel (1.4305)	Stainless steel (1.4301)	PBT	PBT
	PBT	PTFE	PBT	PBT
	-25...85 °C	-30...70 °C	-25...85 °C	-25...85 °C
	10...30 VDC	10...35 VDC	10...30 VDC	10...30 VDC
	CE, cULus, EAC, WEEE	CE, cULus, EAC, WEEE	CE, cULus, EAC, WEEE	CE, cULus, EAC, WEEE
	IP67	IP67	IP67	IP67
	Page 297	Page 297	Page 298	Page 298

PNP normally open			
PNP normally open/normally closed programmable	**BCS004K** BCS M30BBM3-PPC20C-EP02	**BCS004M** BCS M30BBM2-PPM20C-S04G	
PNP/NPN normally open/normally closed programmable			
Dimension	Ø 30 x 82 mm	Ø 30 x 87 mm	
Series	M30	M30	
Thread (A)	M30x1.5	M30x1.5	
Installation	for flush mounting	for flush mounting	
Connection	Cable, 2.00 m, PUR	Connector, M12x1-Male, 4-pin	
Switching frequency	100 Hz	100 Hz	
Interface	—	—	
Range	1...20 mm	1...20 mm	
Sensitivity	Switching distance adjustable	Switching distance adjustable	
Housing material	PBT	PBT	
Material sensing surface	PBT	PBT	
Ambient temperature	-30...70 °C	-30...70 °C	
Operating voltage Ub	10...35 VDC	10...35 VDC	
Approval/Conformity	CE, cULus, EAC, WEEE	CE, cULus, EAC, WEEE	
IP rating	IP66	IP66	
Productview	Page 298	Page 298	

BCS00MR BCS M30B4I2-PSC15D-S04K		**BCS00UJ** BCS G3400I2-PSC15D-S04K	
	BCS004T BCS M30B4M2-PPM20C-S04G		
			BCS003K BCS D500002-YPC25C-EV02
Ø 30 x 79 mm	Ø 30 x 87 mm	Ø 34 x 77 mm	Ø 50 x 10 mm
M30	M30	G34	D50
M30x1.5	M30x1.5	—	—
for flush mounting	for flush mounting	for flush mounting	for flush mounting
Connector, M12x1-Male, 3-pin	Connector, M12x1-Male, 4-pin	Connector, M12x1-Male, 4-pin	Cable, 2.00 m, PVC
100 Hz	100 Hz	100 Hz	50 Hz
—	—	—	—
2...15 mm	1...20 mm	2...15 mm	2...25 mm
Switching distance adjustable	Switching distance adjustable	Switching distance adjustable	Switching distance adjustable
Stainless steel (1.4305) PBT	Stainless steel (1.4301)	POM	POM
PBT	PBT	POM	POM
-25...85 °C	-30...70 °C	-5...85 °C	-30...60 °C
10...30 VDC	10...35 VDC	10...30 VDC	10...30 VDC
CE, cULus, EAC, WEEE	CE, cULus, EAC, WEEE	CE, cULus, EAC, WEEE	CE, cULus, EAC, WEEE
IP67	IP66	IP67	IP67
Page 298	Page 298	Page 298	Page 298

PNP normally open	**BCS012N** BCS R08RRE-PIM80C-EP00,3-GS04	**BCS012T** BCS R08RRE-PSM80C-EP00,3-GS75	
PNP normally closed		**BCS012U** BCS R08RRE-POM80C-EP00,3-GS75	
PNP/NPN normally open/normally closed programmable			
Dimension	34 x 16 x 8 mm	34 x 16 x 8 mm	
Series	R08	R08	
Thread (A)	—	—	
Installation	for flush mounting	for flush mounting	
Connection	Cable with connector, M12x1-Male, 4-pin, 0.30 m, PUR	Cable with connector, 4-pin, 0.30 m, PUR	
Switching frequency	50 Hz	50 Hz	
Interface	IO-Link 1.1	—	
Range	1...8 mm	1...8 mm	
Sensitivity	Switching distance adjustable	Switching distance teachable	
Housing material	PP	PP	
Material sensing surface	PP	PP	
Ambient temperature	-25...70 °C	-25...70 °C	
Operating voltage Ub	18...30 VDC	12...30 VDC	
Approval/Conformity	cULus, CE, IO-Link, WEEE, EAC	cULus, CE, WEEE, EAC	
IP rating	IP67	IP67	
Productview	Page 299	Page 299	

	BCS012A BCS R08RRE-PSM80C-EP02	**BCS00U6** BCS Q40BBAA-PSC20C-EP00,3-GS49		
	BCS012C BCS R08RRE-POM80C-EP02	**BCS00U5** BCS Q40BBAA-POC20C-EP00,3-GS49		
			BCS00TR BCS Q40BBAA-GPC20C-EP02	
	34 x 16 x 8 mm	40 x 40 x 10 mm	40 x 40 x 10 mm	
	R08	Q40	Q40	
	—	—	—	
	for flush mounting	for flush mounting	for flush mounting	
	Cable, 2.00 m, PUR	Cable with connector, M8x1-Male, 3-pin, 0.30 m, PUR	Cable, 2.00 m, PUR	
	50 Hz	100 Hz	100 Hz	
	—	—	—	
	1...8 mm	1...20 mm	1...20 mm	
	Switching distance teachable	Switching distance adjustable	Switching distance adjustable	
	PP	PBT	PBT	
	PP	PBT	PBT	
	-25...70 °C	-5...85 °C	-5...85 °C	
	12...30 VDC	10...30 VDC	10...30 VDC	
	CE, cULus, EAC, WEEE	CE, cULus, EAC, WEEE	CE, cULus, EAC, WEEE	
	IP67	IP67	IP67	
	Page 299	Page 299	Page 299	

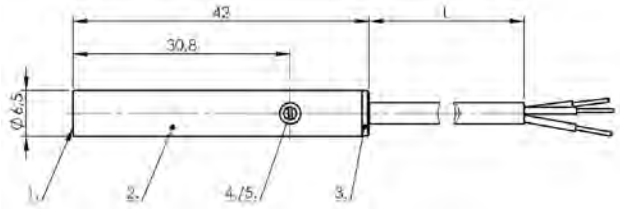

1) Sensing surface, 2) Housing, 3) Cover, 4) Potentiometer, 5) LED function indicator

BCS001L

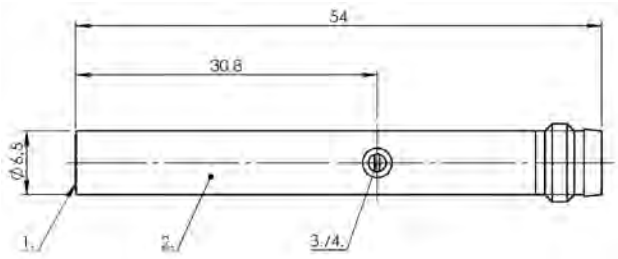

1) Sensing surface, 2) Housing, 3) Potentiometer, 4) LED function indicator

BCS001R

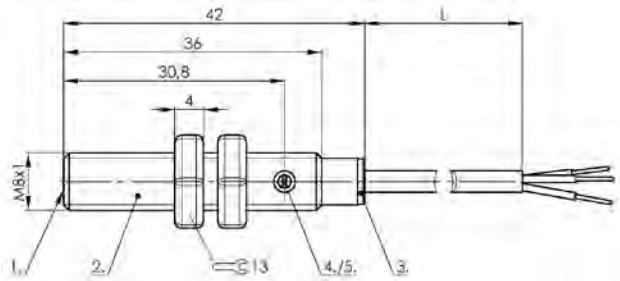

1) Sensing surface, 2) Housing, 3) Cover, 4) Potentiometer, 5) LED function indicator

BCS0026

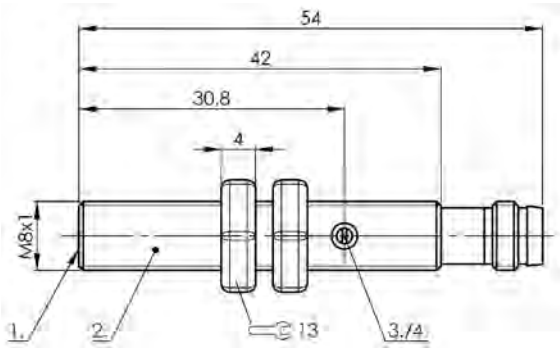

1) Sensing surface, 2) Housing, 3) Potentiometer, 4) LED function indicator

BCS002A

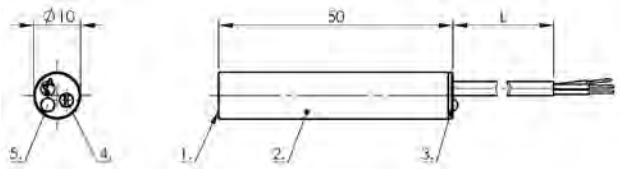

1) Sensing surface, 2) Housing, 3) Cover, 4) Potentiometer, 5) LED function indicator

BCS002T

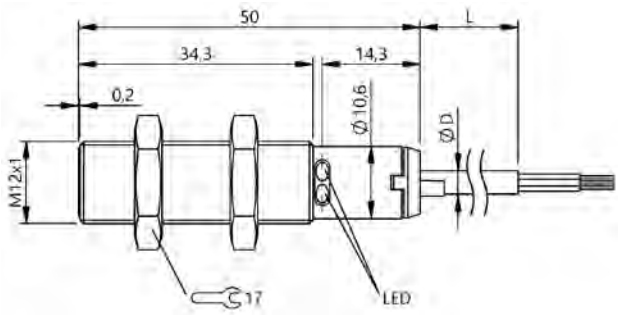

BCS017H

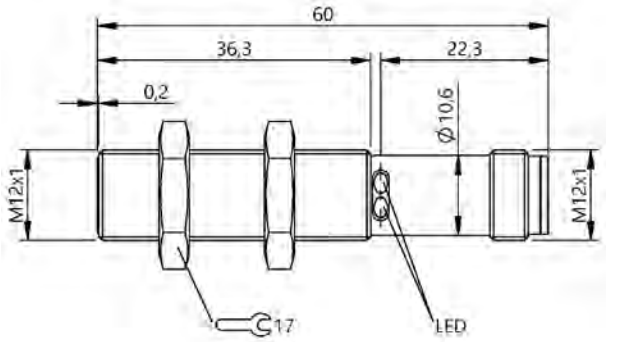

BCS017K

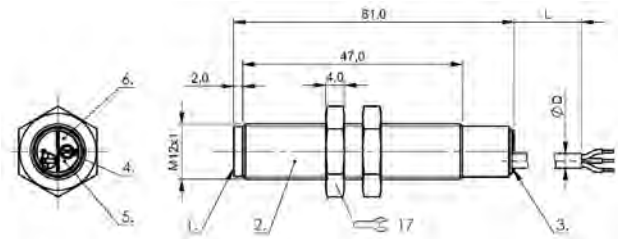

1) Sensing surface, 2) Housing, 3) Cover, 4) Potentiometer, 5) LED Power,
6) LED function indicator

BCS00PU

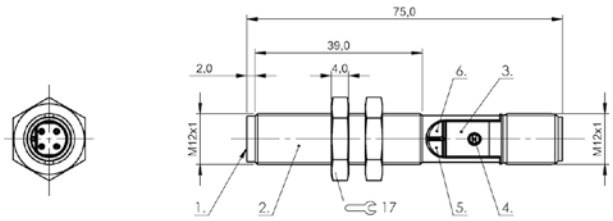

1) Sensing surface, 2) Housing, 3) Cover, 4) Potentiometer, 5) LED Power, 6) LED function indicator

BCS00PJ

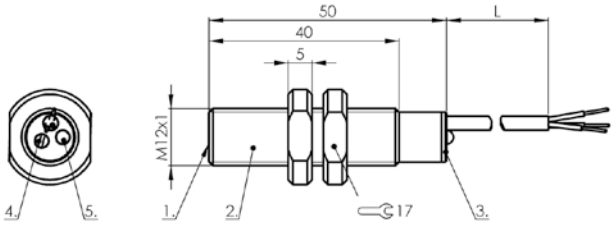

1) Sensing surface, 2) Housing, 3) Cover, 4) Potentiometer, 5) LED function indicator

BCS00AU

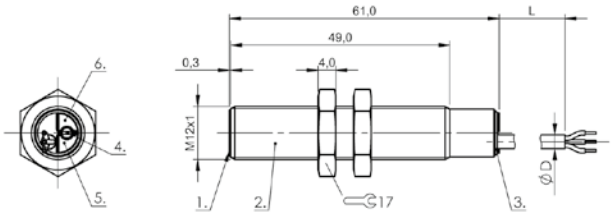

1) Sensing surface, 2) Housing, 3) Cover, 4) Potentiometer, 5) LED Power, 6) LED function indicator

BCS00R4

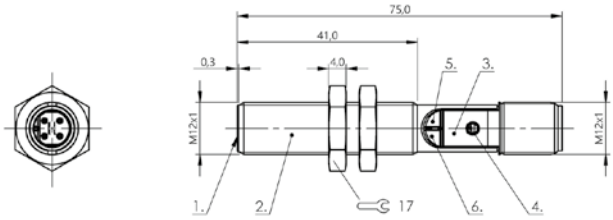

1) Sensing surface, 2) Housing, 3) Cover, 4) Potentiometer, 5) LED Power, 6) LED function indicator

BCS00P0

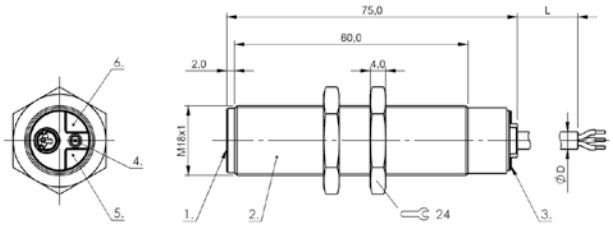

1) Sensing surface, 2) Housing, 3) Cover, 4) Potentiometer, 5) LED Power, 6) LED function indicator

BCS00M2, BCS00NZ

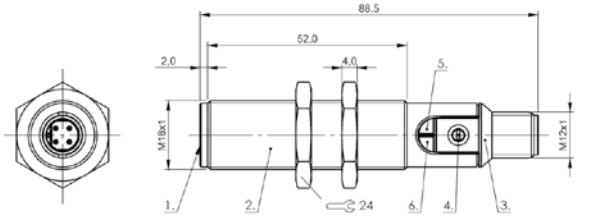

1) Sensing surface, 2) Housing, 3) Cover, 4) Potentiometer, 5) LED Power, 6) LED function indicator

BCS00M8

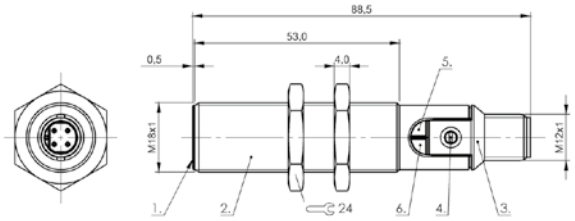

1) Sensing surface, 2) Housing, 3) Cover, 4) Potentiometer, 5) LED Power, 6) LED function indicator

BCS00MF

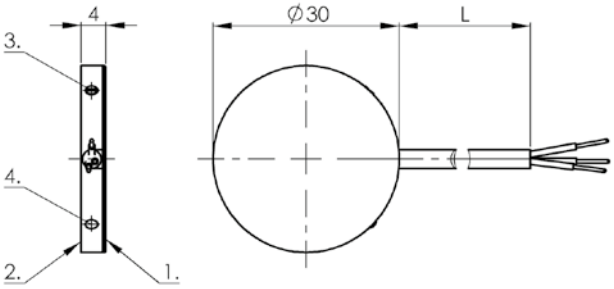

1) Sensing surface, 2) Housing, 3) Potentiometer, 4) LED function indicator

BCS003F, BCS003A

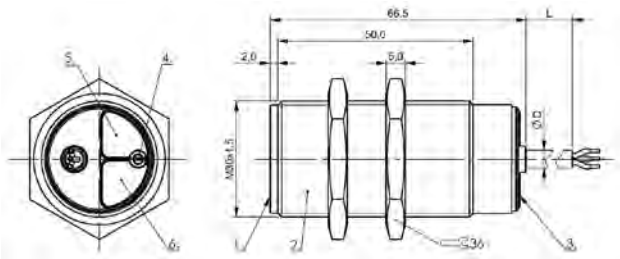

1) Sensing surface, 2) Housing, 3) Cover, 4) Potentiometer, 5) LED Power,
6) LED function indicator

BCS00NM

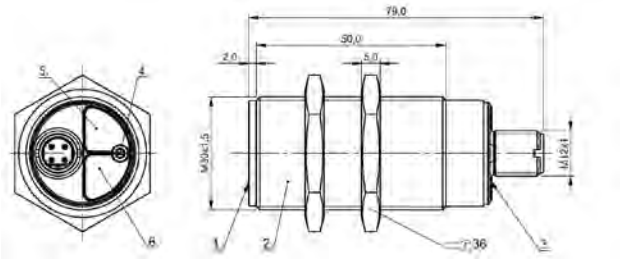

1) Sensing surface, 2) Housing, 3) Cover, 4) Potentiometer, 5) LED Power,
6) LED function indicator

BCS00NA

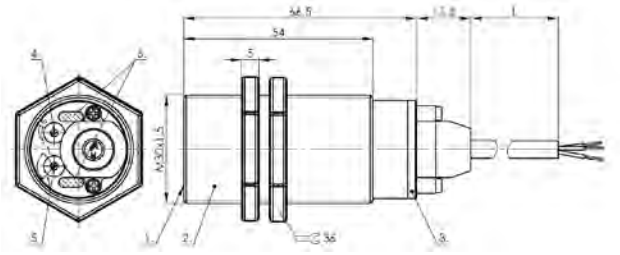

1) Sensing surface, 2) Housing, 3) Cover, 4) Potentiometer, 5) NO or NC selectable,
6) LED function indicator

BCS004K

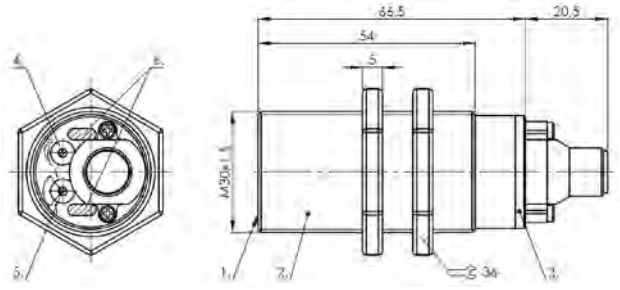

1) Sensing surface, 2) Housing, 3) Cover, 4) Potentiometer, 5) NO or NC selectable,
6) LED function indicator

BCS004M

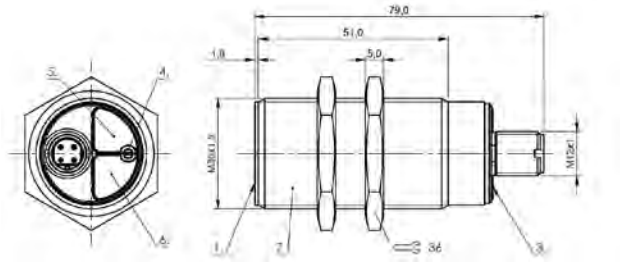

1) Sensing surface, 2) Housing, 3) Cover, 4) Potentiometer, 5) LED Power,
6) LED function indicator

BCS00MR

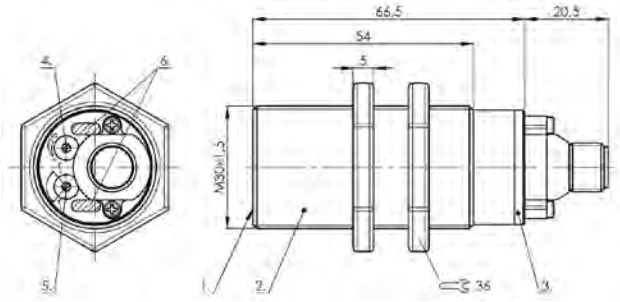

1) Sensing surface, 2) Housing, 3) Cover, 4) Potentiometer, 5) NO or NC selectable,
6) LED function indicator

BCS004T

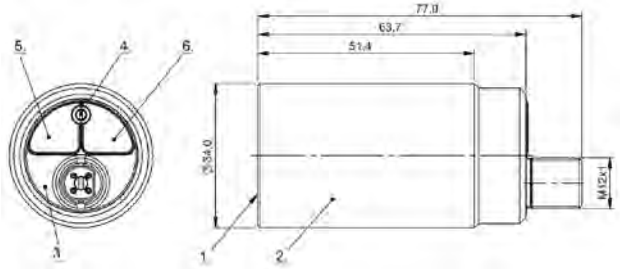

1) Sensing surface, 2) Housing, 3) Cover, 4) Potentiometer, 5) LED Power,
6) LED function indicator

BCS00UJ

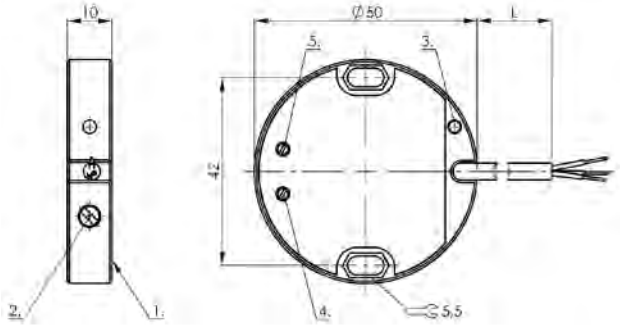

1) Sensing surface, 2) Potentiometer, 3) LED function indicator, 4) NO or NC selectable,
5) PNP or NPN selectable

BCS003K

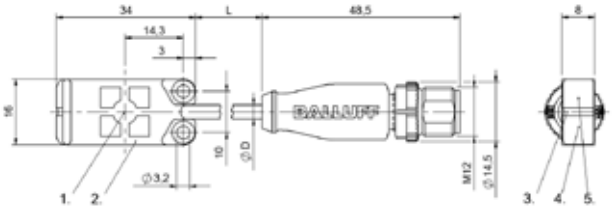

1) Sensing surface, 2) Housing, 3) Cover, 4) Power indicator green, 5) Function indicator yellow

BCS012N

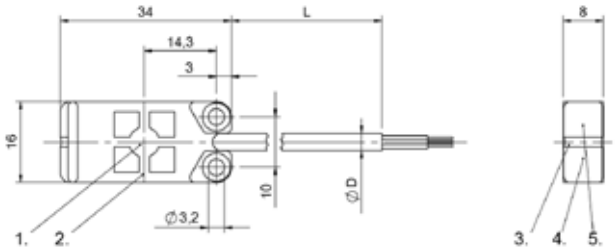

1) Sensing surface, 2) Housing, 3) Cover, 4) Power indicator green, 5) Function indicator yellow

BCS012A, BCS012C

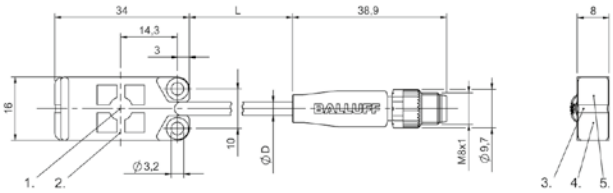

1) Sensing surface, 2) Housing, 3) Cover, 4) Power indicator green, 5) Function indicator yellow

BCS012T, BCS012U

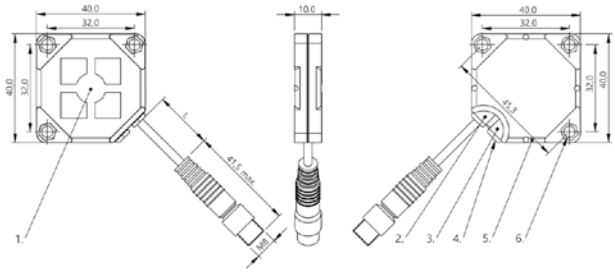

1) Sensing surface, 2) Power indicator green, 3) Function indicator yellow,
4) Potentiometer, 5) Fastening: Cable tie, 6) Fastening: screw 3xM3

BCS00U6, BCS00U5

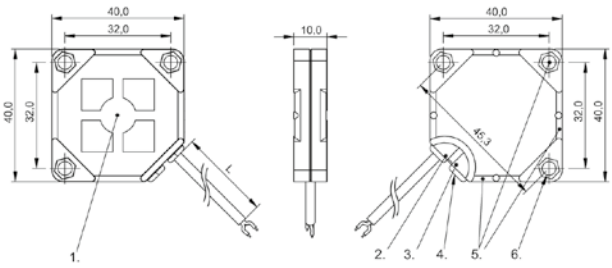

1) Sensing surface, 2) Power indicator green, 3) Function indicator yellow, 4) Potentiometer,
5) Fastening: Cable tie, 6) Fastening: screw 3xM3

BCS00TR

PNP normally open		
PNP normally closed		
PNP normally open/normally closed programmable	**BCS0084** BCS D500004-PPCFAC-EV02	
Dimension	Ø 50 x 10 mm	
Series	D50	
Installation	flush with container outer wall	
Connection	Cable, 2.00 m, PVC	
Switching frequency	2 Hz	
Interface	—	
Sensitivity	media-dependent, adjustable	
Function	Smart Level 15	
Additional features	Electrically conductive media, Foam and residue compensation	
Housing material	POM	
Material sensing surface	POM	
Ambient temperature	-10...60 °C	
Operating voltage Ub	10...35 VDC	
Approval/Conformity	CE, cULus, EAC, WEEE	
IP rating	IP67	
Productview	Page 304	

BCS012P BCS R08RRE-PIMFHC-EP00,3-GS04	**BCS012Z** BCS R08RRE-PSMFHC-EP00,3-GS75	**BCS012H** BCS R08RRE-PSMFHC-EP02
	BCS0130 BCS R08RRE-POMFHC-EP00,3-GS75	**BCS012J** BCS R08RRE-POMFHC-EP02
34 x 16 x 8 mm	34 x 16 x 8 mm	34 x 16 x 8 mm
R08	R08	R08
flush with container outer wall	flush with container outer wall	flush with container outer wall
Cable with connector, M12x1-Male, 4-pin, 0.30 m, PUR	Cable with connector, M8x1-Male, 4-pin, 0.30 m, PUR	Cable, 2.00 m, PUR
10 Hz	10 Hz	10 Hz
IO-Link 1.1	—	—
teachable depending on media	teachable depending on media	teachable depending on media
Smart Level 50	Smart Level 50	Smart Level 50
Electrically conductive media, Foam and residue compensation	Electrically conductive media, Foam and residue compensation	Electrically conductive media, Foam and residue compensation
PP	PP	PP
PP	PP	PP
-25...70 °C	-25...70 °C	-25...70 °C
18...30 VDC	12...30 VDC	12...30 VDC
cULus, IO-Link, CE, WEEE, EAC	cULus, CE, WEEE, EAC	CE, cULus, EAC, WEEE
IP67	IP67	IP67
Page 304	Page 304	Page 304

PNP normally open	**BCS0134** BCS Q40BBAA-PSCFHC-EP00,3-GS49	
PNP normally closed	**BCS0135** BCS Q40BBAA-POCFHC-EP00,3-GS49	
NPN normally open programmable		
PNP/NPN normally open/normally closed programmable		
Dimension	40 x 40 x 10 mm	
Series	Q40	
Installation	flush with container outer wall	
Connection	Cable with connector, M8x1-Male, 3-pin, 0.30 m, PUR	
Switching frequency	10 Hz	
Interface	—	
Sensitivity	media-dependent, adjustable	
Function	Smart Level 50	
Additional features	Electrically conductive media, Foam and residue compensation	
Housing material	PBT	
Material sensing surface	PBT	
Ambient temperature	-5...85 °C	
Operating voltage Ub	10...30 VDC	
Approval/Conformity	CE, cULus, EAC, WEEE	
IP rating	IP67	
Productview	Page 304	

		BCS018A BCS Q40BBAA-PSICFHC-EP00,3-GS04	
	BCS0133 BCS Q40BBAA-GPCFHC-EP02		
	40 x 40 x 10 mm	40 x 40 x 10 mm	
	Q40	Q40	
	flush with container outer wall	flush with container outer wall	
	Cable, 2.00 m, PUR	Cable with connector, M12x1-Male, 3-pin, 0.30 m, PUR	
	10 Hz	10 Hz	
	—	IO-Link 1.1	
	media-dependent, adjustable	teachable depending on media	
	Smart Level 50	Smart Level 50	
	Electrically conductive media, Foam and residue compensation	Electrically conductive media, Foam and residue compensation	
	PBT	PBT	
	PBT	PBT	
	-5...85 °C	-20...80 °C	
	10...30 VDC	10...30 VDC	
	CE, cULus, EAC, WEEE	CE, cULus, EAC, WEEE, IO-Link	
	IP67	IP67	
	Page 304	Page 304	

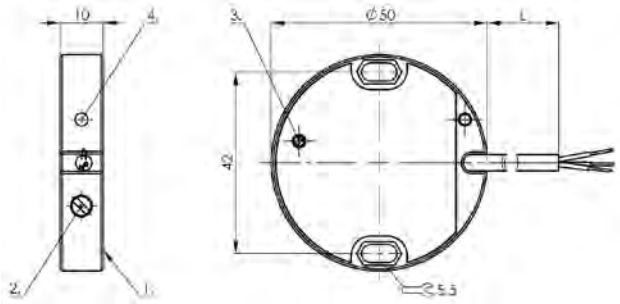

1) Sensing surface, 2) Potentiometer, 3) NO or NC selectable, 4) LED function indicator

BCS0084

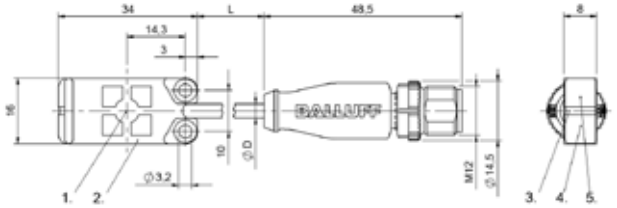

1) Sensing surface, 2) Housing, 3) Cover, 4) Power indicator green, 5) Function indicator yellow

BCS012P

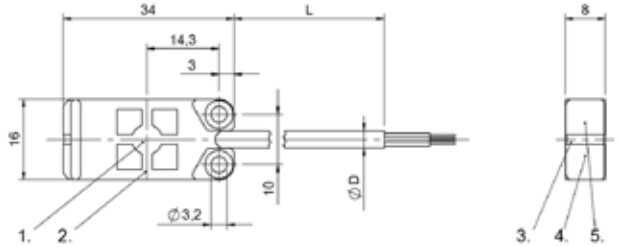

1) Sensing surface, 2) Housing, 3) Cover, 4) Power indicator green, 5) Function indicator yellow

BCS012H, BCS012J

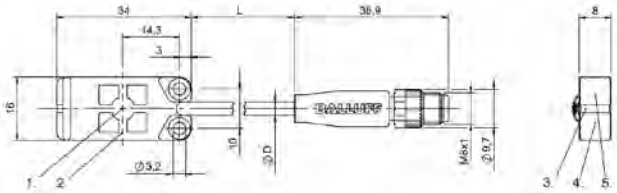

1) Sensing surface, 2) Housing, 3) Cover, 4) Power indicator green, 5) Function indicator yellow

BCS012Z, BCS0130

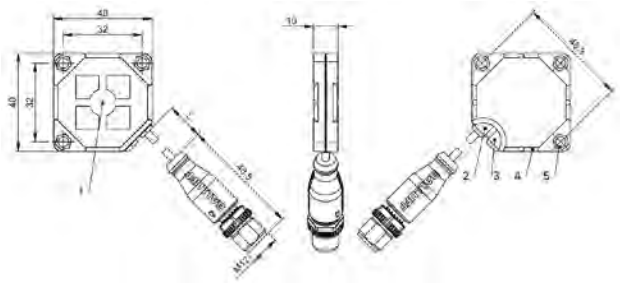

1) Sensing surface, 2) Power indicator green, 3) Function indicator yellow,
4) Fastening: Cable tie, 5) Fastening: screw 3xM3

BCS018A

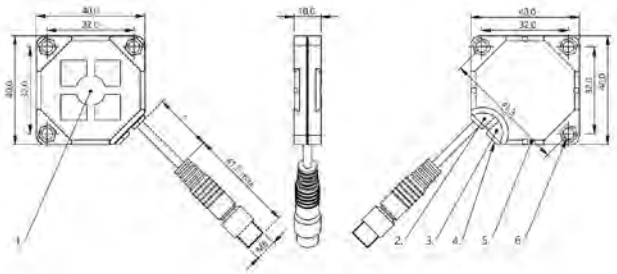

1) Sensing surface, 2) Power indicator green, 3) Function indicator yellow, 4) Potentiometer,
5) Fastening: Cable tie, 6) Fastening: screw 3xM3

BCS0134, BCS0135

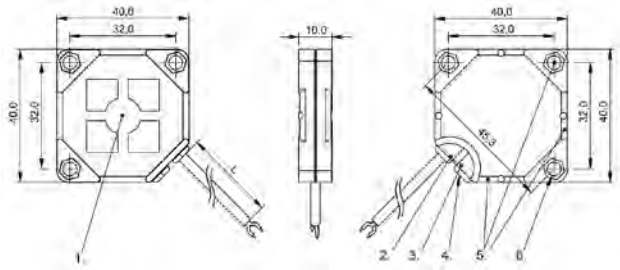

1) Sensing surface, 2) Power indicator green, 3) Function indicator yellow, 4) Potentiometer,
5) Fastening: Cable tie, 6) Fastening: screw 3xM3

BCS0133

PNP normally open	**BCS001Y** BCS G06T4E1-PSM30G-EP02	**BCS0022** BCS G06T4D2-PSM30G-S49G	
PNP normally closed			
Dimension	Ø 6.5 x 42 mm	Ø 6.5 x 54 mm	
Series	G06	G06	
Thread (A)	—	—	
Installation	non-flush	non-flush	
Connection	Cable, 2.00 m, PUR	Connector, M8x1-Male, 3-pin	
Switching frequency	100 Hz	100 Hz	
Interface	—	—	
Range	0.1...3 mm	0.1...3 mm	
Sensitivity	Switching distance adjustable	Switching distance adjustable	
Function	—	—	
Additional features	—	—	
Housing material	Stainless steel (1.4301)	Stainless steel (1.4301)	
Material sensing surface	PTFE	PTFE	
Ambient temperature	-10...70 °C	-10...70 °C	
Operating voltage Ub	11...30 VDC	11...30 VDC	
Approval/Conformity	CE, cULus, EAC, WEEE	CE, cULus, EAC, WEEE	
IP rating	IP65	IP65	
Productiew	Page 318	Page 318	

	BCS002M BCS M08T4E2-PSM30G-S49G	BCS00R0 BCS M12BBG1-PSC80H-EP02	BCS00PN BCS M12BBE2-PSC80H-S04K	BCS006Z BCS M12TTG1-PSM80G-ET02
		BCS00R1 BCS M12BBG1-POC80H-EP02	BCS00PP BCS M12BBE2-POC80H-S04K	BCS0070 BCS M12TTG1-POM80G-ET02
	Ø 8 x 54 mm	Ø 12 x 61 mm	Ø 12 x 75 mm	Ø 12 x 53 mm
	M08	M12	M12	M12
	M8x1	M12x1	M12x1	M12x1
	non-flush	non-flush	non-flush	non-flush
	Connector, M8x1-Male, 3-pin	Cable, 2.00 m, PUR	Connector, M12x1-Male, 3-pin	Cable, 2.00 m, PTFE
	100 Hz	100 Hz	100 Hz	100 Hz
	—	—	—	—
	0.1...3 mm	1...8 mm	1...8 mm	1...8 mm
	Switching distance adjustable	Switching distance adjustable	Switching distance adjustable	Switching distance adjustable
	—	—	—	—
	—	—	—	—
	Stainless steel (1.4301)	PBT	PBT	PTFE
	PTFE	PBT	PBT	PTFE
	-10...70 °C	-25...85 °C	-25...85 °C	-30...70 °C
	11...30 VDC	10...30 VDC	10...30 VDC	12...35 VDC
	CE, cULus, EAC, WEEE	CE, cULus, EAC, WEEE	CE, cULus, EAC, WEEE	CE, cULus, EAC, WEEE
	IP65	IP67	IP67	IP65
	Page 318	Page 318	Page 318	Page 319

Do you need more details? Our Product Finder at www.balluff.com provides you with product-specific information, including technical drawings, data sheets, user guides and more for each individual product. All items are available for download.

PNP normally open	**BCS00PC** BCS M12B4G1-PSC80H-EP02	**BCS00P4** BCS M12B4E2-PSC80H-S04K	
PNP normally closed			
Push-pull Normally open (NO)			
Dimension	Ø 12 x 61 mm	Ø 12 x 75 mm	
Series	M12	M12	
Thread (A)	M12x1	M12x1	
Installation	non-flush	non-flush	
Connection	Cable, 2.00 m, PUR	Connector, M12x1-Male, 3-pin	
Switching frequency	100 Hz	100 Hz	
Interface	—	—	
Range	1...8 mm	1...8 mm	
Sensitivity	Switching distance adjustable	Switching distance adjustable	
Function	—	—	
Additional features	—	—	
Housing material	Stainless steel (1.4305)	Stainless steel (1.4305)	
Material sensing surface	PBT	PBT	
Ambient temperature	-25...85 °C	-25...85 °C	
Operating voltage Ub	10...30 VDC	10...30 VDC	
Approval/Conformity	CE, cULus, EAC, WEEE	CE, cULus, EAC, WEEE	
IP rating	IP67	IP67	
Productiew	Page 318	Page 318	

		BCS008A BCS M18TTI2-PSCFAG-AT02	**BCS00LL** BCS M18BBH1-PSC15H-EP02	**BCS00LM** BCS M18BBG2-PSC15H-S04K
				BCS00LT BCS M18BBG2-POC15H-S04K
	BCS0179 BCS M12K4D2-GSM80G-S04G			
	Ø 12 x 60 mm	Ø 18 x 73 mm	Ø 18 x 75.5 mm	Ø 18 x 88.5 mm
	M12	M18	M18	M18
	M12x1	M18x1	M18x1	M18x1
	non-flush	non-flush	non-flush	non-flush
	Connector, M12x1-Male, 4-pin	Cable, 2.00 m, PTFE	Cable, 2.00 m, PUR	Connector, M12x1-Male, 4-pin
	100 Hz	2 Hz	100 Hz	100 Hz
	—	—	—	—
	0.5...8 mm	—	2...15 mm	2...15 mm
	Switching distance teachable	media-dependent, adjustable	Switching distance adjustable	Switching distance adjustable
	—	Smart Level 15	—	—
	—	Electrically conductive media, Foam and residue compensation	—	—
	Stainless steel (1.4404)	PTFE	PBT	PBT
	PEEK	PTFE	PBT	PBT
	-10...80 °C	-10...60 °C	-25...85 °C	-25...85 °C
	12...30 VDC	10...35 VDC	10...30 VDC	10...30 VDC
	CE, cULus, EAC, WEEE	CE, cULus, EAC, WEEE	CE, cULus, EAC, WEEE	CE, cULus, EAC, WEEE
	IP67	IP66	IP67	IP67
	Page 318	Page 319	Page 319	Page 319

Do you need more details? Our Product Finder at www.balluff.com provides you with product-specific information, including technical drawings, data sheets, user guides and more for each individual product. All items are available for download.

PNP normally open	**BCS0073** BCS M18TTI2-PSC15G-AT02	**BCS00ME** BCS M18B4G2-PSC15H-S04K	
PNP normally open/normally closed programmable			
Dimension	Ø 18 x 73 mm	Ø 18 x 88.5 mm	
Series	M18	M18	
Thread (A)	M18x1	M18x1	
Installation	non-flush	non-flush	
Connection	Cable, 2.00 m, PTFE	Connector, M12x1-Male, 4-pin	
Switching frequency	100 Hz	100 Hz	
Interface	—	—	
Range	2...15 mm	2...15 mm	
Sensitivity	Switching distance adjustable	Switching distance adjustable	
Function	—	—	
Additional features	—	—	
Housing material	PTFE	Stainless steel (1.4305)	
Material sensing surface	PTFE	PBT	
Ambient temperature	-30...70 °C	-25...85 °C	
Operating voltage Ub	10...35 VDC	10...30 VDC	
Approval/Conformity	CE, cULus, EAC, WEEE	CE, cULus, EAC, WEEE	
IP rating	IP67	IP67	
Productiew	Page 319	Page 319	

	BCS006A BCS M18T4G2-PSC15G-S04G		BCS0086 BCS M30TTH2-PSCFAG-AT02	BCS00NT BCS M30BBE1-PSC25H-EP02
		BCS007Y BCS M30BBM2-PPCFAG-S04G		
	Ø 18 x 75 mm	Ø 30 x 87 mm	Ø 30 x 72 mm	Ø 30 x 65.5 mm
	M18	M30	M30	M30
	M18x1	M30x1.5	M30x1.5	M30x1.5
	non-flush	non-flush	non-flush	non-flush
	Connector, M12x1-Male, 4-pin	Connector, M12x1-Male, 4-pin	Cable, 2.00 m, PTFE	Cable, 2.00 m, PUR
	100 Hz	2 Hz	2 Hz	100 Hz
	—	—	—	—
	2...15 mm	—	—	1...25 mm
	Switching distance adjustable	media-dependent, adjustable	media-dependent, adjustable	Switching distance adjustable
	—	Smart Level 15	Smart Level 15	—
	—	Electrically conductive media, Foam and residue compensation	Electrically conductive media, Foam and residue compensation	—
	Stainless steel (1.4301)	PBT	PTFE	PBT
	PTFE	PBT	PTFE	PBT
	-30...70 °C	-10...60 °C	-10...60 °C	-25...85 °C
	10...35 VDC	10...35 VDC	10...35 VDC	10...30 VDC
	CE, cULus, EAC, WEEE	CE, cULus, EAC, WEEE	CE, cULus, EAC, WEEE	CE, cULus, EAC, WEEE
	IP67	IP67	IP67	IP67
	Page 319	Page 319	Page 319	Page 320

PNP normally open	**BCS00NH** BCS M30BBE2-PSC25H-S04K		
PNP normally open/normally closed programmable		**BCS007F** BCS M30BBM2-PPC30G-S04G	
Dimension	Ø 30 x 78.5 mm	Ø 30 x 87 mm	
Series	M30	M30	
Thread (A)	M30x1.5	M30x1.5	
Installation	non-flush	non-flush	
Connection	Connector, M12x1-Male, 4-pin	Connector, M12x1-Male, 4-pin	
Switching frequency	100 Hz	100 Hz	
Interface	—	—	
Range	1...25 mm	1...30 mm	
Sensitivity	Switching distance adjustable	Switching distance adjustable	
Function	—	—	
Additional features	—	—	
Housing material	PBT	PBT	
Material sensing surface	PBT	PBT	
Ambient temperature	-25...85 °C	-30...70 °C	
Operating voltage Ub	10...30 VDC	10...35 VDC	
Approval/Conformity	CE, cULus, EAC, WEEE	CE, cULus, EAC, WEEE	
IP rating	IP67	IP66	
Productiew	Page 320	Page 320	

	BCS0077 BCS M30TTH2-PSC30G-AT02	BCS00N6 BCS M30B4E1-PSC25H-EP02	BCS00MY BCS M30B4E2-PSC25H-S04K	
				BCS007L BCS M30T4M2-PPC30G-S04G
	Ø 30 x 72 mm	Ø 30 x 65.5 mm	Ø 30 x 78.5 mm	Ø 30 x 86.5 mm
	M30	M30	M30	M30
	M30x1.5	M30x1.5	M30x1.5	M30x1.5
	non-flush	non-flush	non-flush	non-flush
	Cable, 2.00 m, PTFE	Cable, 2.00 m, PUR	Connector, M12x1-Male, 4-pin	Connector, M12x1-Male, 4-pin
	100 Hz	100 Hz	100 Hz	100 Hz
	—	—	—	—
	2...30 mm	1...25 mm	1...25 mm	1...30 mm
	Switching distance adjustable	Switching distance adjustable	Switching distance adjustable	Switching distance adjustable
	—	—	—	—
	—	—	—	—
	PTFE	Stainless steel (1.4305)	Stainless steel (1.4305)	Stainless steel (1.4301)
	PTFE	PBT	PBT	PTFE
	-30...70 °C	-25...85 °C	-25...85 °C	-30...70 °C
	10...35 VDC	10...30 VDC	10...30 VDC	10...35 VDC
	CE, cULus, EAC, WEEE	CE, cULus, EAC, WEEE	CE, cULus, EAC, WEEE	CE, cULus, EAC, WEEE
	IP67	IP67	IP67	IP66
	Page 320	Page 320	Page 320	Page 320

PNP normally open	**BCS0105** BCS S44KK01-PSCFAG-EP00,3-GS49		
PNP normally closed			
PNP normally open/normally closed programmable		**BCS010L** BCS S44KK01-GPCFAG-EP02	
PNP/NPN normally open/normally closed codierbar			
Dimension	Ø 12 x 62.5 mm	Ø 12 x 62.5 mm	
Series	S44	S44	
Thread (A)	M12x1	M12x1	
Installation	non-flush	non-flush	
Connection	Cable with connector, M8x1-Male, 3-pin, 0.30 m, PUR	Cable, 2.00 m, PUR	
Switching frequency	5 Hz	5 Hz	
Interface	—	—	
Range	—	—	
Sensitivity	media-dependent, adjustable	media-dependent, adjustable	
Function	Smart Level 15	Smart Level 15	
Additional features	Electrically conductive media, Foam and residue compensation	Electrically conductive media, Foam and residue compensation	
Housing material	PEEK	PEEK	
Material sensing surface	PEEK	PEEK	
Ambient temperature	-5...105 °C, UL approval valid up to 85 °C	-5...105 °C, UL approval valid up to 85 °C	
Operating voltage Ub	10...30 VDC	10...30 VDC	
Approval/Conformity	CE, WEEE, cULus, EAC	CE, WEEE, cULus, EAC	
IP rating	IP67	IP67	
Productiew	Page 320	Page 320	

BCS00ZL BCS S44KK01-PSCFNG-EP00,3-GS49		**BCS0109** BCS S44KK02-PSCFAG-EP00,3-GS49	
		BCS010A BCS S44KK02-POCFAG-EP00,3-GS49	
	BCS010N BCS S44KK03-GPCFAG-EP02		**BCS010M** BCS S44KK02-GPCFAG-EP02
Ø 12 x 62.5 mm	Ø 13.7 x 62.5 mm	Ø 11.9 x 62.5 mm	Ø 11.9 x 62.5 mm
S44	S44	S44	S44
M12x1	NPT 1/4“	G 1/4“	G 1/4“
non-flush	non-flush	non-flush	non-flush
Cable with connector, M8x1-Male, 3-pin, 0.30 m, PUR	Cable, 2.00 m, PUR	Cable with connector, M8x1-Male, 3-pin, 0.30 m, PUR	Cable, 2.00 m, PUR
10 Hz	5 Hz	5 Hz	5 Hz
—	—	—	—
—	—	—	—
media-dependent, adjustable	media-dependent, adjustable	media-dependent, adjustable	media-dependent, adjustable
—	Smart Level 15	Smart Level 15	Smart Level 15
—	Electrically conductive media, Foam and residue compensation	Electrically conductive media, Foam and residue compensation	Electrically conductive media, Foam and residue compensation
PEEK	PEEK	PEEK	PEEK
PEEK	PEEK	PEEK	PEEK
-5...105 °C	-5...105 °C, UL approval valid up to 85 °C	-5...105 °C, UL approval valid up to 85 °C	-5...105 °C, UL approval valid up to 85 °C
10...30 VDC	10...30 VDC	10...30 VDC	10...30 VDC
CE, WEEE, EAC	CE, WEEE, cULus, EAC	CE, WEEE, cULus, EAC	CE, WEEE, cULus, EAC
IP67	IP67	IP67	IP67
Page 320	Page 320	Page 321	Page 321

PNP normally open			
PNP normally closed			
PNP/NPN normally open/normally closed programmable	**BCS018T** BCS S30KK01-GPSFHF-EV05	**BCS018Z** BCS S30KK02-GPSFHF-EV05	
Dimension	Ø 18 x 76 mm	Ø 16.8 x 76 mm	
Series	—	—	
Thread (A)	G 1/4“	M12x1	
Installation	non-flush	non-flush	
Connection	Cable, 3-pin, 5 m, PVC	Cable, 3-pin, 5 m, PVC	
Switching frequency	5 Hz	5 Hz	
Interface	—	—	
Range	—	—	
Sensitivity	media-dependent, adjustable	media-dependent, adjustable	
Function	—	—	
Additional features	—	—	
Housing material	PEEK	PEEK	
Material sensing surface	PEEK	PEEK	
Ambient temperature	-10...105 °C	-10...105 °C	
Operating voltage Ub	18...30 VDC	18...30 VDC	
Approval/Conformity	CE, WEEE, FDA compliant, EAC	CE, WEEE, FDA compliant, EAC	
IP rating	IP68	IP68	
Productiew	Page 318	Page 318	

	BCS011E BCS S04K501-PICFNG-S04G-T50	BCS011F BCS S04K501-PSCFNG-S04G-T50		
		BCS011H BCS S04K501-POCFNG-S04G-T50		
	Ø 30 x 96 mm	Ø 30 x 96 mm		
	S04	S04		
	G 1/2“	G 1/2“		
	non-flush	non-flush		
	Connector, M12x1-Male, 4-pin	Connector, M12x1-Male, 4-pin		
	5 Hz	5 Hz		
	IO-Link 1.1	—		
	—	—		
	teachable depending on media	teachable depending on media		
	Smart Level 100	Smart Level 100		
	Electrically conductive media, Foam and residue compensation, CIP/SIP capable	Electrically conductive media, Foam and residue compensation, CIP/SIP capable		
	Stainless steel (1.4404)	Stainless steel (1.4404)		
	PEEK	PEEK		
	-40...85 °C	-40...85 °C		
	18...30 VDC	12...30 VDC		
	CE, IO-Link, EAC, WEEE, cULus LISTED, designed according to EHEDG specifications, FDA compliant	CE, WEEE, IO-Link, cULus LISTED, EAC, designed according to EHEDG specifications, FDA compliant		
	IP68	IP68		
	Page 321	Page 321		

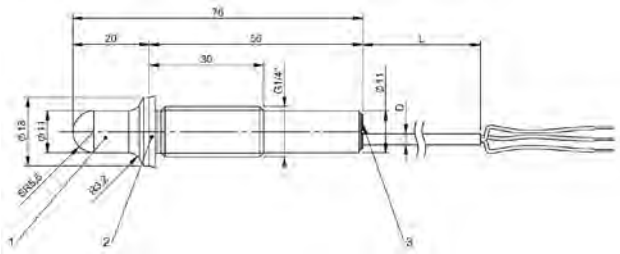

1) Sensing surface, 2) Sealing ring, 3) Potentiometer

BCS018T

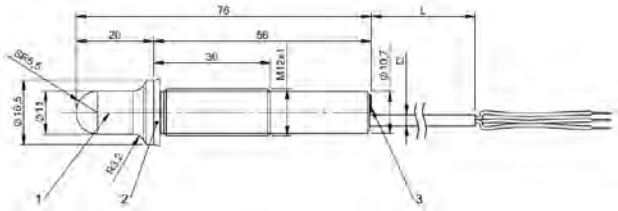

1) Sensing surface, 2) Flat gasket, 3) Potentiometer

BCS018Z

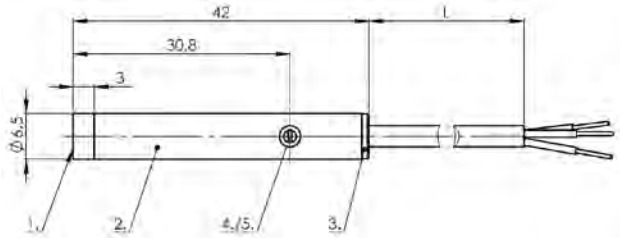

1) Sensing surface, 2) Housing, 3) Cover, 4) Potentiometer, 5) LED function indicator

BCS001Y

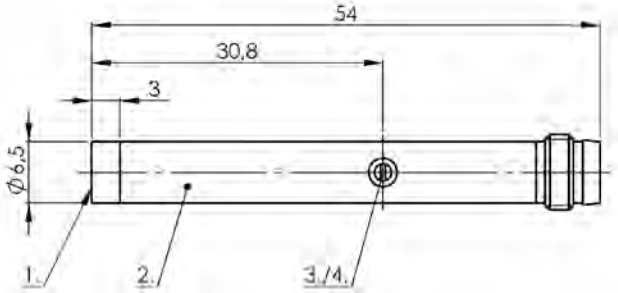

1) Sensing surface, 2) Housing, 3) Potentiometer, 4) LED function indicator

BCS0022

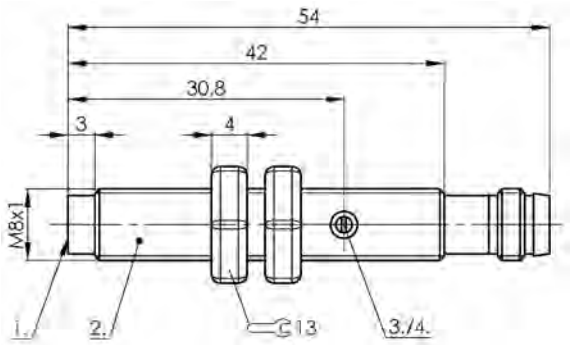

1) Sensing surface, 2) Housing, 3) Potentiometer, 4) LED function indicator

BCS002M

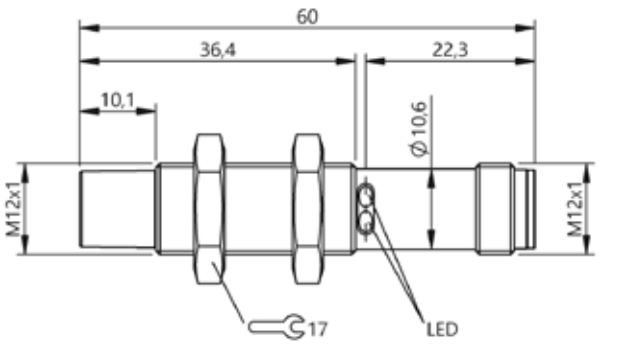

BCS0179

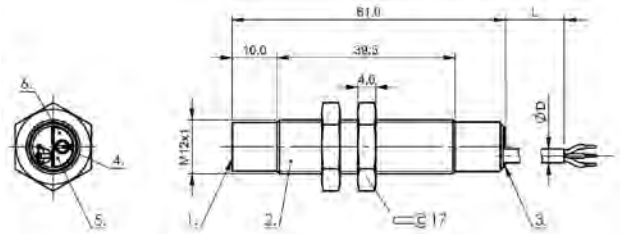

1) Sensing surface, 2) Housing, 3) Cover, 4) Potentiometer, 5) LED Power,
6) LED function indicator

BCS00R0, BCS00R1, BCS00PC

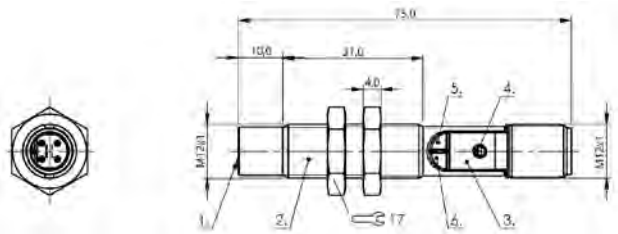

1) Sensing surface, 2) Housing, 3) Cover, 4) Potentiometer, 5) LED Power,
6) LED function indicator

BCS00PN, BCS00PP, BCS00P4

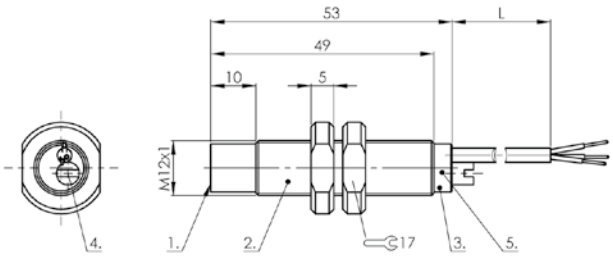

1) Sensing surface, 2) Housing, 3) Cover, 4) Potentiometer, 5) LED function indicator

BCS006Z, BCS0070

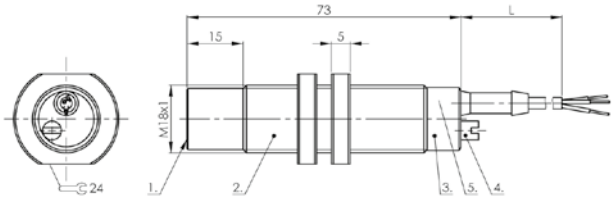

1) Sensing surface, 2) Housing, 3) Cover, 4) Potentiometer, 5) LED function indicator

BCS008A

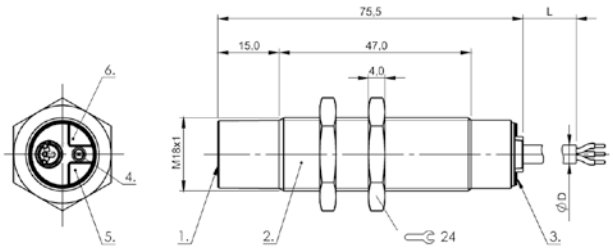

1) Sensing surface, 2) Housing, 3) Cover, 4) Potentiometer, 5) LED Power, 6) LED function indicator

BCS00LL

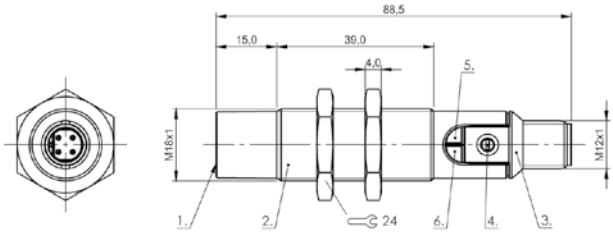

1) Sensing surface, 2) Housing, 3) Cover, 4) Potentiometer, 5) LED Power, 6) LED function indicator

BCS00LM, BCS00LT, BCS00ME

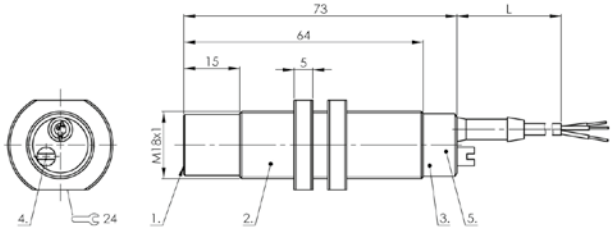

1) Sensing surface, 2) Housing, 3) Cover, 4) Potentiometer, 5) LED function indicator

BCS0073

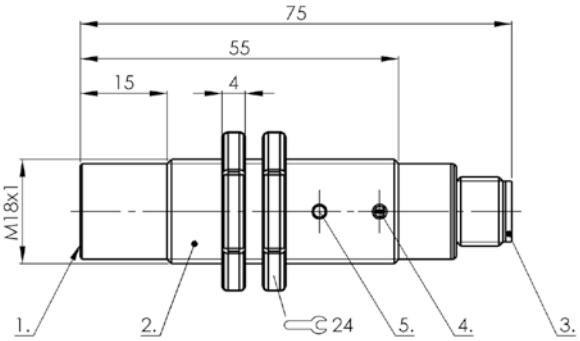

1) Sensing surface, 2) Housing, 3) Cover, 4) Potentiometer, 5) LED function indicator

BCS006A

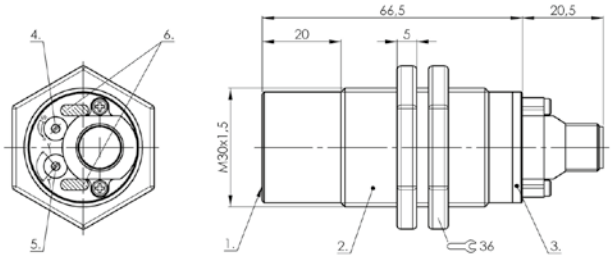

1) Sensing surface, 2) Housing, 3) Cover, 4) Potentiometer, 5) NO or NC selectable, 6) LED function indicator

BCS007Y

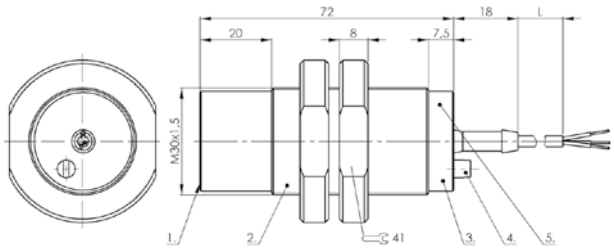

1) Sensing surface, 2) Housing, 3) Cover, 4) Potentiometer, 5) LED function indicator

BCS0086

Do you need more details? Our Product Finder at www.balluff.com provides you with product-specific information, including technical drawings, data sheets, user guides and more for each individual product. All items are available for download.

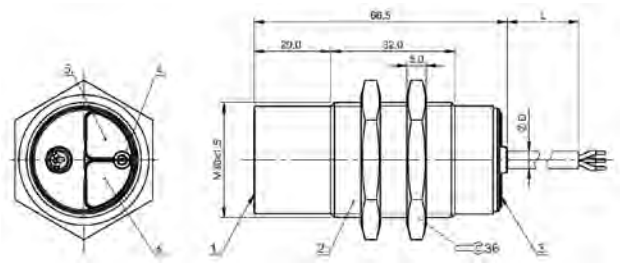

1) Sensing surface, 2) Housing, 3) Cover, 4) Potentiometer, 5) LED Power, 6) LED function indicator

BCS00NT, BCS00N6

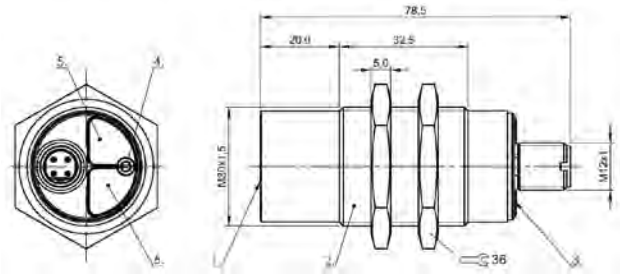

1) Sensing surface, 2) Housing, 3) Cover, 4) Potentiometer, 5) LED Power, 6) LED function indicator

BCS00NH, BCS00MY

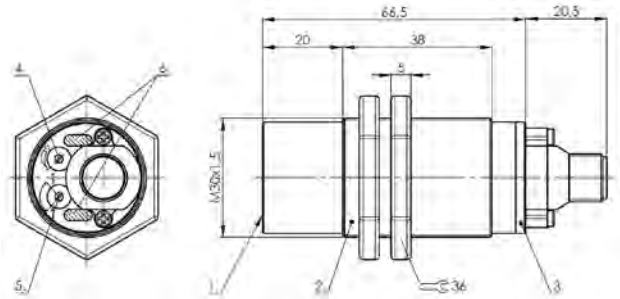

1) Sensing surface, 2) Housing, 3) Cover, 4) Potentiometer, 5) NO or NC selectable, 6) LED function indicator

BCS007F

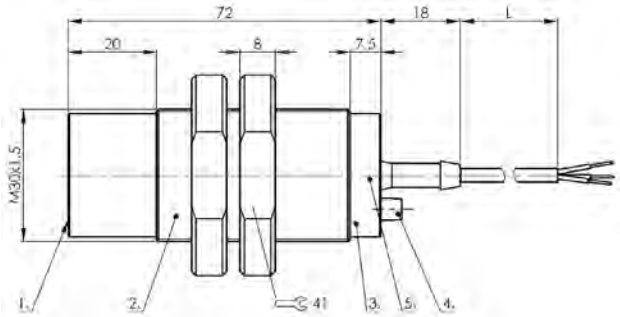

1) Sensing surface, 2) Housing, 3) Cover, 4) Potentiometer, 5) LED function indicator

BCS0077

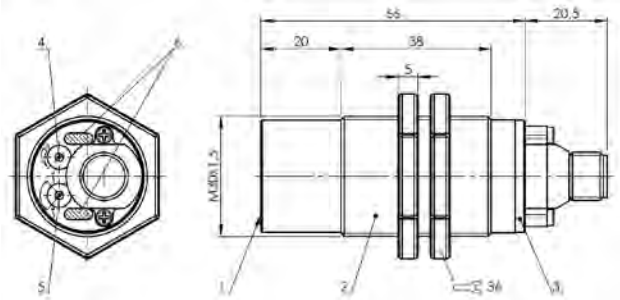

1) Sensing surface, 2) Housing, 3) Cover, 4) Potentiometer, 5) NO or NC selectable, 6) LED function indicator

BCS007L

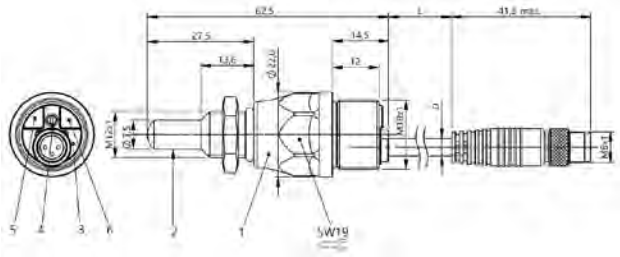

1) Housing, 2) Sensing surface, 3) Cover, 4) Potentiometer, 5) Function indicator yellow, 6) Power indicator green

BCS0105, BCS00ZL

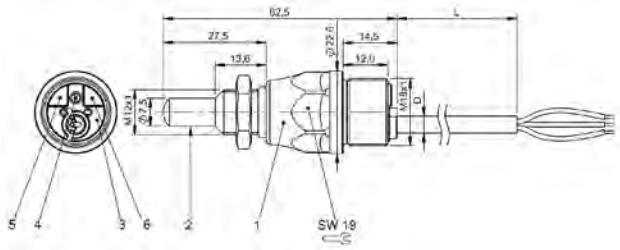

1) Housing, 2) Sensing surface, 3) Cover, 4) Potentiometer, 5) Function indicator yellow, 6) Power indicator green

BCS010L

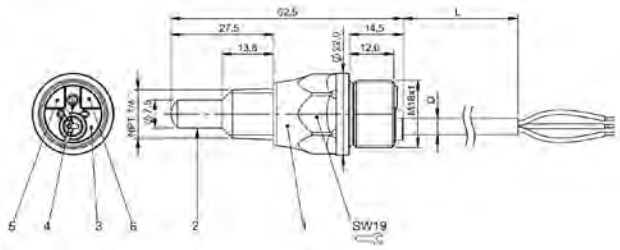

1) Housing, 2) Sensing surface, 3) Cover, 4) Potentiometer, 5) Function indicator yellow, 6) Power indicator green

BCS010N

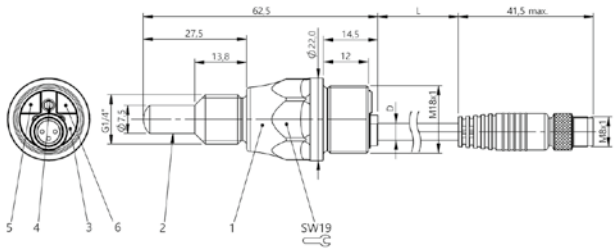

1) Housing, 2) Sensing surface, 3) Cover, 4) Potentiometer, 5) Function indicator yellow, 6) Power indicator green

BCS0109, BCS010A

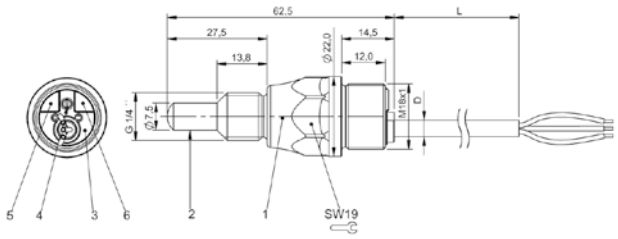

1) Housing, 2) Sensing surface, 3) Cover, 4) Potentiometer, 5) Function indicator yellow, 6) Power indicator green

BCS010M

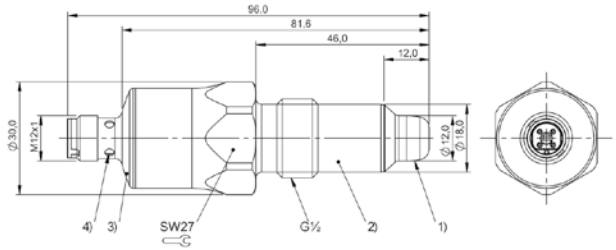

1) Sensing surface, 2) Housing, 3) Cover, 4) LED function indicator

BCS011E, BCS011F, BCS011H

	BCS0010 BCS G04T4D-XXS10C-EP02-GZ01-002	BCS0012 BCS G06T4B-XXS15C-EP02-GZ01-002	
Dimension	Ø 4 x 29 mm	Ø 6.5 x 18 mm	
Series	G04	G06	
Thread (A)	—	—	
Installation	for flush mounting	for flush mounting	
Connection	Cable with connector, Special connector-Special connector, 2.00 m, PUR	Cable with connector, Special connector-Special connector, 2.00 m, PUR	
Interface	Special interface	Special interface	
Range	0.1...1 mm	0.1...1.5 mm	
Sensitivity	adjustable on base unit	adjustable on base unit	
Housing material	Stainless steel (1.4301)	Stainless steel (1.4301)	
Material sensing surface	PTFE	PTFE	
Ambient temperature	-30...80 °C	-30...80 °C	
Approval/Conformity	CE, cULus	CE, cULus	
Protection degree	IP67	IP67	
Productview	Page 328	Page 328	

	BCS0013 BCS G06T4B-XXS30G-EP02-GZ01-002	BCS0016 BCS G10T4B-XXS40C-EP02-GZ01-002	BCS0017 BCS G10T4C-XXS80G-EP02-GZ01-002	BCS0011 BCS M05T4C-XXS10C-EP02-GZ01-002
	Ø 6.5 x 19 mm	Ø 10 x 20 mm	Ø 10 x 24 mm	Ø 5 x 29 mm
	G06	G10	G10	M05
	—	—	—	M5x0.5
	non-flush	for flush mounting	non-flush	for flush mounting
	Cable with connector, Special connector-Special connector, 2.00 m, PUR	Cable with connector, Special connector-Special connector, 2.00 m, PUR	Cable with connector, Special connector-Special connector, 2.00 m, PUR	Cable with connector, Special connector-Special connector, 2.00 m, PUR
	Special interface	Special interface	Special interface	Special interface
	0.1...3 mm	0.1...4 mm	1...8 mm	0.1...1 mm
	adjustable on base unit	adjustable on base unit	adjustable on base unit	adjustable on base unit
	Stainless steel (1.4301)	Stainless steel (1.4301)	Stainless steel (1.4301)	Stainless steel (1.4301)
	PTFE	PTFE	PTFE	PTFE
	-30...80 °C	-30...80 °C	-30...80 °C	-30...80 °C
	CE, cULus	CE, cULus	CE, cULus	CE, cULus
	IP67	IP67	IP67	IP67
	Page 328	Page 328	Page 328	Page 328

	BCS0014 BCS M08T4C-XXS15C-EP02-GZ01-002	BCS0015 BCS M08T4C1-XXS30G-EP02-GZ01-002	
Dimension	Ø 8 x 25 mm	Ø 8 x 28 mm	
Series	M08	M08	
Thread (A)	M8x1	M8x1	
Installation	for flush mounting	non-flush	
Connection	Cable with connector, Special connector-Special connector, 2.00 m, PUR	Cable with connector, Special connector-Special connector, 2.00 m, PUR	
Interface	Special interface	Special interface	
Range	0.1...1.5 mm	0.1...3 mm	
Sensitivity	adjustable on base unit	adjustable on base unit	
Housing material	Stainless steel (1.4301)	Stainless steel (1.4301)	
Material sensing surface	PTFE	PTFE	
Ambient temperature	-30...80 °C	-30...80 °C	
Approval/Conformity	CE, cULus	CE, cULus	
Protection degree	IP67	IP67	
Productview	Page 328	Page 328	

	BCS0019 BCS M12T4D1-XXS80G-EP02-GZ01-002	BCS001A BCS D18T403-XXS30C-EP02-GZ01-002	BCS001C BCS D18T404-XXS50C-EP02-GZ01-002	BCS001F BCS D22T405-XXS10C-EP02-GZ01-002
	Ø 12 x 34 mm	Ø 18 x 2.5 mm	Ø 18 x 4 mm	Ø 22 x 4 mm
	M12	D18	D18	D22
	M12x1	—	—	—
	non-flush	for flush mounting	for flush mounting	for flush mounting
	Cable with connector, Special connector-Special connector, 2.00 m, PUR	Cable with connector, Special connector-Special connector, 2.00 m, PVC	Cable with connector, Special connector-Special connector, 2.00 m, PUR	Cable with connector, Special connector-Special connector, 2.00 m, PUR
	Special interface	Special interface	Special interface	Special interface
	1...8 mm	0.1...3 mm	1...5 mm	1...10 mm
	adjustable on base unit	adjustable on base unit	adjustable on base unit	adjustable on base unit
	Stainless steel (1.4301)	Stainless steel (1.4301)	Stainless steel (1.4301)	Stainless steel (1.4301)
	PTFE	PTFE	PTFE	PTFE
	-30...80 °C	-30...70 °C	-30...80 °C	-30...80 °C
	CE, cULus	CE, cULus	CE, cULus	CE, cULus
	IP67	IP66	IP66	IP66
	Page 329	Page 329	Page 329	Page 329

	BCS001H BCS D22T408-XXS10C-EP02-GZ01-002		
Dimension	Ø 22 x 10 mm		
Series	D22		
Thread (A)	—		
Installation	for flush mounting		
Connection	Cable with connector, Special connector-Special connector, 2.00 m, PUR		
Interface	Special interface		
Range	1...10 mm		
Sensitivity	adjustable on base unit		
Housing material	Stainless steel (1.4301)		
Material sensing surface	PTFE		
Ambient temperature	-30...80 °C		
Approval/Conformity	CE, cULus		
Protection degree	IP66		
Productview	Page 329		

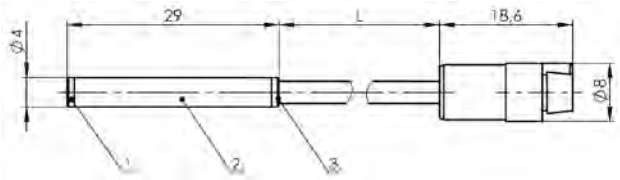

1) Sensing surface, 2) Housing, 3) Cover

BCS0010

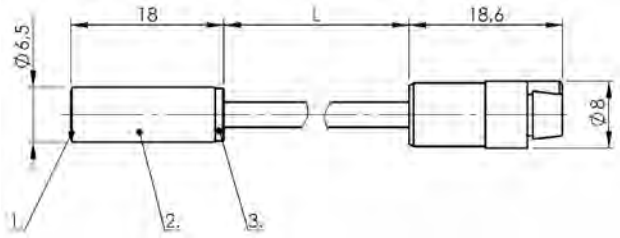

1) Sensing surface, 2) Housing, 3) Cover

BCS0012

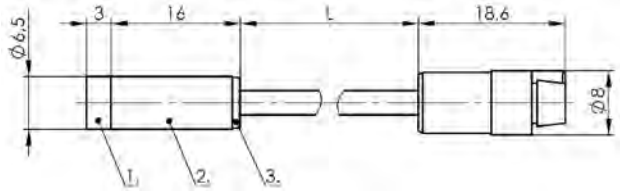

1) Sensing surface, 2) Housing, 3) Cover

BCS0013

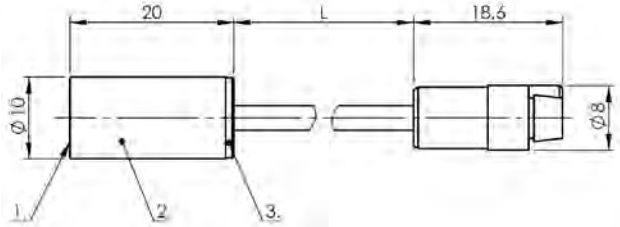

1) Sensing surface, 2) Housing, 3) Cover

BCS0016

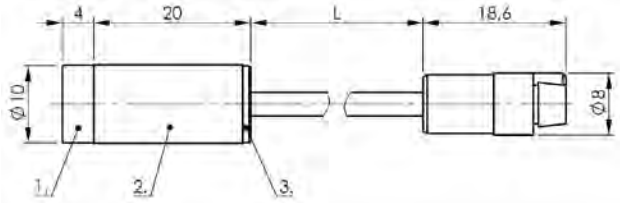

1) Sensing surface, 2) Housing, 3) Cover

BCS0017

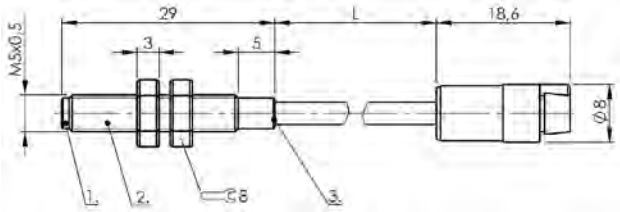

1) Sensing surface, 2) Housing, 3) Cover

BCS0011

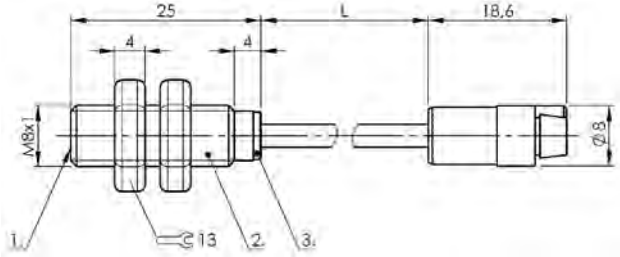

1) Sensing surface, 2) Housing, 3) Cover

BCS0014

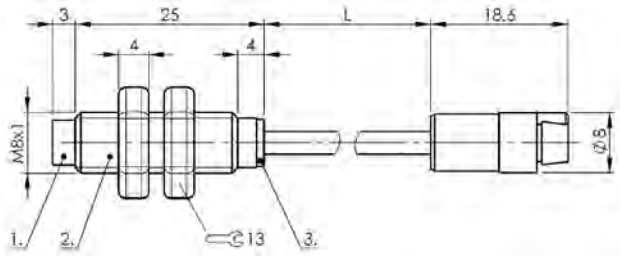

1) Sensing surface, 2) Housing, 3) Cover

BCS0015

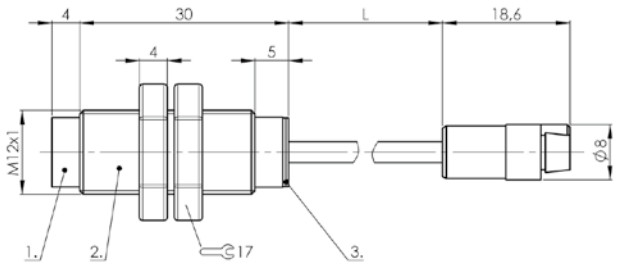

1) Sensing surface, 2) Housing, 3) Cover

BCS0019

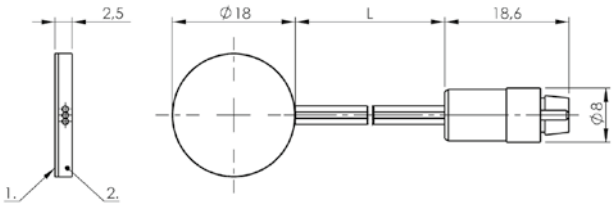

1) Sensing surface, 2) Housing

BCS001A

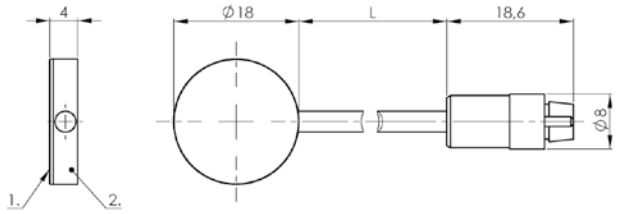

1) Sensing surface, 2) Housing

BCS001C

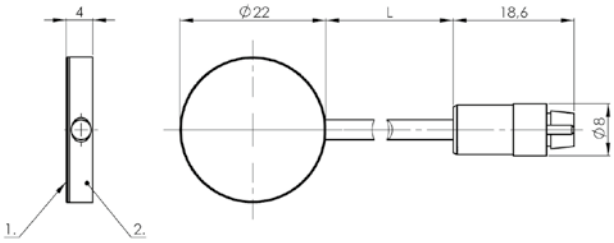

1) Sensing surface, 2) Housing

BCS001F

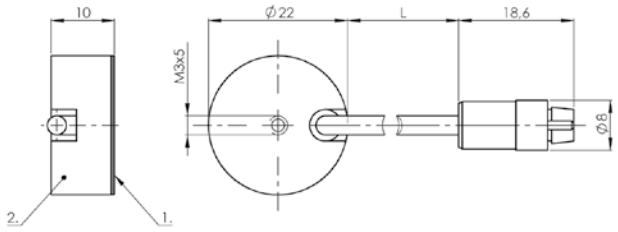

1) Sensing surface, 2) Housing

BCS001H

PNP/NPN normally open/normally closed programmable	**BAE00LC** BAE SA-CS-027-YI-BP00,3-GS04		
Analog, voltage 0...10 V/current 4...20 mA		**BAE00KJ** BAE SA-CS-026-YP-BP02	
Dimension	10.5 x 45 x 75.5 mm	10.5 x 45 x 75.5 mm	
Connection	Cable with connector, M12x1 connector, 4-pin, 0.30 m, PUR	Cable, 2.00 m, PUR	
Switching frequency	50 Hz	100 Hz	
Interface	IO-Link 1.1	—	
Housing material	PBT	PBT	
Ambient temperature	-10...70 °C	-10...70 °C	
Operating voltage Ub	18...30 VDC	15...30 VDC	
Approval/Conformity	CE, IO-Link, cULus	CE, cULus	
Protection degree	IP40	IP40	
Time function	On/off delay time programmable	On/off delay time programmable	
Productview	Page 332	Page 332	

		BAE00KH BAE SA-CS-025-YP-BP02	**BAE00L9** BAE SA-CS-025-YP-BP00,3-GS04	
	BAE00LA BAE SA-CS-026-YP-BP00,3-GS04			
	10.5 x 45 x 75.5 mm	10.5 x 45 x 75.5 mm	10.5 x 45 x 75.5 mm	
	Cable with connector, M12x1, 0.30 m, PUR	Cable, 2.00 m, PUR	Cable with connector, M12x1, 0.30 m, PUR	
	100 Hz	100 Hz	100 Hz	
	—	—	—	
	PBT	PBT	PBT	
	-10...70 °C	-10...70 °C	-10...70 °C	
	15...30 VDC	12...30 VDC	12...30 VDC	
	CE, cULus	CE, cULus	CE, cULus	
	IP40	IP40	IP40	
	On/off delay time programmable	—	—	
	Page 332	Page 333	Page 333	

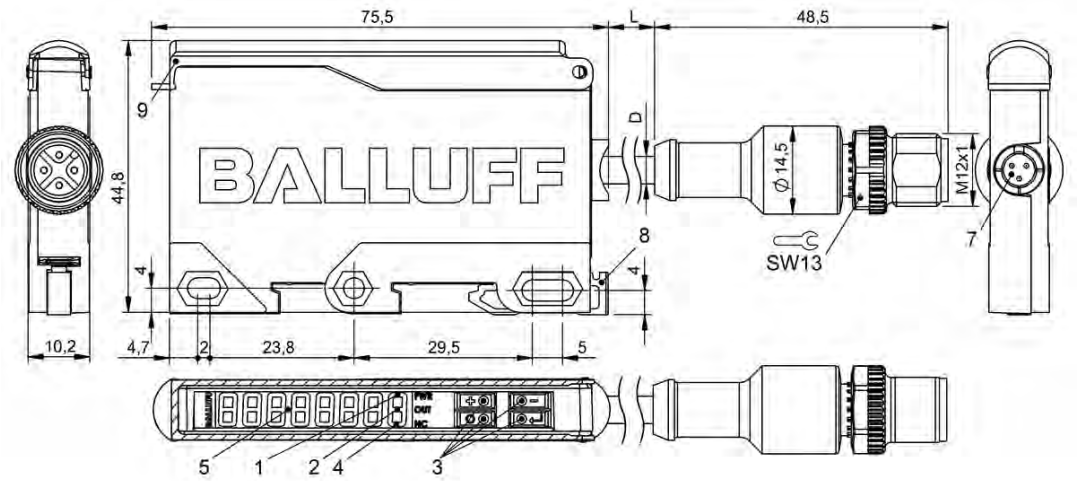

1) LED Power, 2) LED function indicator, 3) 4x operating keys, 4) LED N.C. function active, 5) 7x seven-segment display, 7) Plug connection sensor, 8) DIN rail mount 35mm, 9) Flap

BAE00LC, BAE00LA

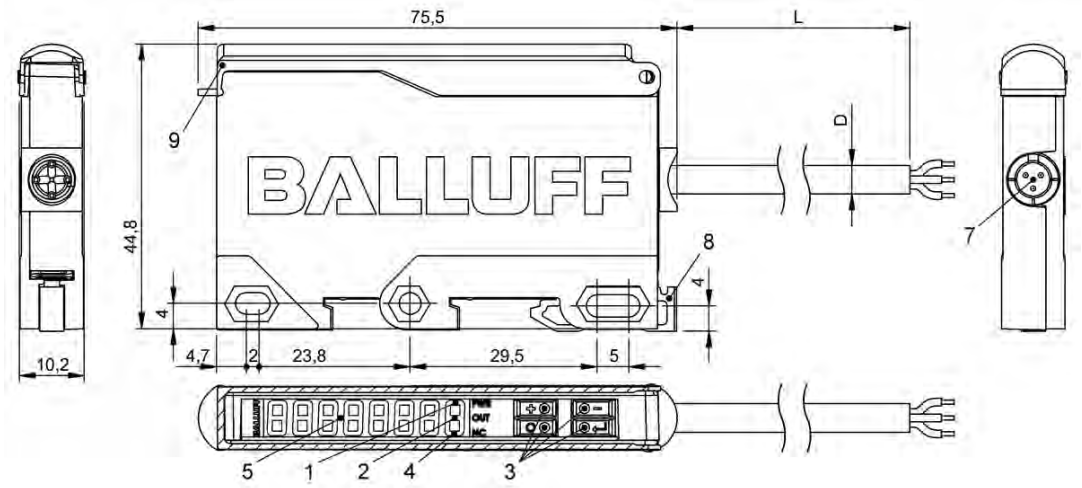

1) LED Power, 2) LED function indicator, 3) 4x operating keys, 4) LED N.C. function active, 5) 7x seven-segment display, 7) Plug connection sensor, 8) DIN rail mount 35mm, 9) Flap

BAE00KJ

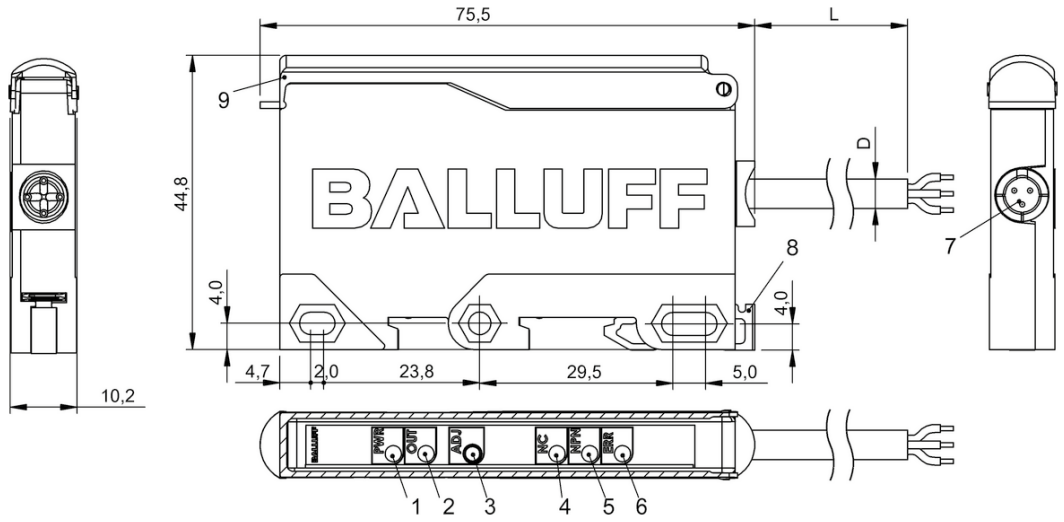

1) LED Power, 2) LED function indicator, 3) Sn, 4) LED N.C. function active, 5) Switching stage NPN, active, 6) LED Error, 7) Plug connection sensor, 8) DIN rail mount 35mm, 9) Flap

BAE00KH

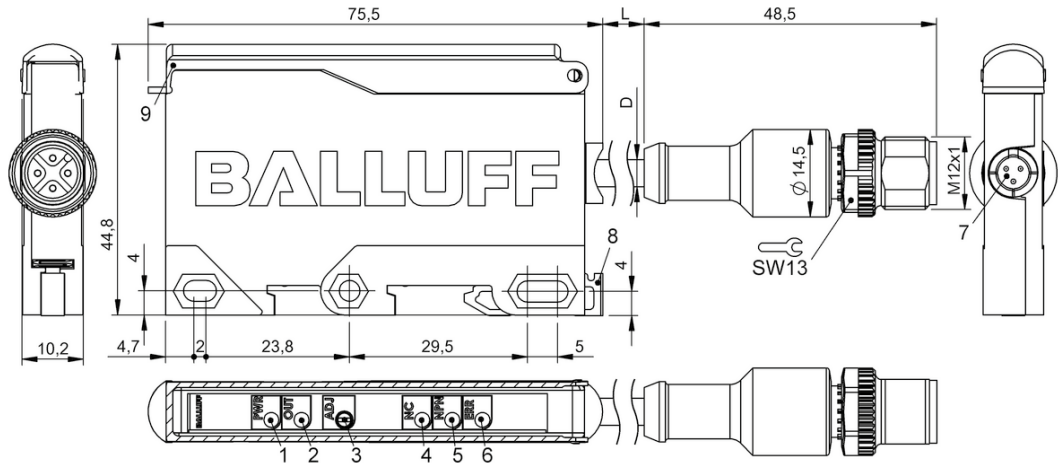

1) LED Power, 2) LED function indicator, 3) Sn, 4) LED N.C. function active, 5) Switching stage NPN, active, 6) LED Error, 7) Plug connection sensor, 8) DIN rail mount 35mm, 9) Flap

BAE00L9

Normally open		**BCS000K** BCS M18KM3-UST80G-BV02	
Normally closed		**BCS000J** BCS M18KM3-U0T80G-BV02	
Analog, current falling on approach			
With sensor amplifier	**BCS013E** BCS Z094401-XXS20B-SZ02-T07		
Dimension	Ø 18 x 38.5 mm	Ø 18 x 84 mm	
Series	Z09	M18	
Thread (A)	M12x1	M18x1	
Installation	for flush mounting	non-flush	
Connection	Connector-triaxial plug	Cable, 2.00 m, PVC	
Switching frequency	5 Hz	40 Hz	
Interface	Special interface	—	
Range	0.1...2 mm	0...6.5 mm	
Sensitivity	adjustable on base unit	Switching distance adjustable	
Housing material	Stainless steel (1.4104)	PBT	
Material sensing surface	Stainless steel (1.4301) epoxy	PBT	
Ambient temperature	0...180 °C	-25...80 °C	
Pressure rating max.	150 bar	—	
Operating voltage Ub	—	20...250 VDC/20...250 VAC	
Approval/Conformity	CE	CE	
Protection degree	IP68	IP67	
Productview	Page 340	Page 340	

	BCW0001 BCW M18B4M1-ICM80C-DV02			
		BCS00A3 BCS S10T401-XXSFNC-SZ02-T07	**BCS00A1** BCS M18T4H1-XXS10H-SZ02-T08	
	Ø 18 x 70 mm	Ø 18 x 61 mm	Ø 18 x 65 mm	
	M18	S10	M18	
	M18x1	M18x1	M18x1	
	for flush mounting	non-flush	non-flush	
	Cable, 2.00 m, PVC	Connector, Special connec-tor-Special connector	Connector, Special connec-tor-Special connector	
	100 Hz	5 Hz	50 Hz	
	—	Special interface	Special interface	
	0...8 mm	—	1...10 mm	
	—	adjustable on base unit	adjustable on base unit	
	Stainless steel	Stainless steel (1.4301)	Stainless steel (1.4301)	
	PBT	PTFE	PTFE	
	10...55 °C	-10...180 °C	-180...250 °C	
	—	6 bar	—	
	12...35 VDC	—	—	
	CE, cULus	CE	CE	
	IP67	IP68	IP66	
	Page 340	Page 340	Page 340	

PNP normally open/normally closed	**BCS00W7** BCS G20L4Q-PAC10C-EV03-D03		
Normally open		**BCS000W** BCS M30KN2-UST15G-AV02	
Normally closed		**BCS000U** BCS M30KN2-U0T15G-AV02	
With sensor amplifier			
Dimension	Ø 20 x 81 mm	Ø 30 x 99 mm	
Series	G20	M30	
Thread (A)	—	M30x1.5	
Installation	for flush mounting	non-flush	
Connection	Cable, 3.00 m, PVC	Cable, 2.00 m, PVC	
Switching frequency	100 Hz	100 Hz	
Interface	—	—	
Range	1.5...10 mm	0...12.1 mm	
Sensitivity	Switching distance adjustable	Switching distance adjustable	
Housing material	Stainless steel (1.4301)	PBT	
Material sensing surface	LCP	PBT	
Ambient temperature	-25...70 °C	-25...70 °C	
Pressure rating max.	—	—	
Operating voltage Ub	10...30 VDC	20...250 VDC/20...250 VAC	
Approval/Conformity	CE	CE	
Protection degree	IP65	IP65	
Productview	Page 340	Page 340	

	BCS00A2 BCS M30T4G1-XXS20H-SZ02-T08	BCS000Y BCS F01CP01-XXS10C-EP02-GZ01-002	BCW0004 BCW F03EA85-XXSFNC-EP00,3-GZ01	
	Ø 30 x 65 mm	90 x 16 x 4 mm	33 x 2 x 850 mm	
	M30	F01	F03	
	M30x1.5	—	—	
	non-flush	flush with container outer wall	flush with container outer wall	
	Connector, Special connec-tor-Special connector	Cable with connector, Special connector-Special connector, 2.00 m, PUR	Cable with connector, Binder 719, 3-pin, 0.3 m, TPU	
	100 Hz	100 Hz	50 Hz	
	Special interface	Special interface	Special interface	
	1...20 mm	2...10 mm	—	
	adjustable on base unit	adjustable on base unit	adjustable on base unit	
	Stainless steel (1.4301)	PC PUR	PET PA	
	PTFE	PUR	3M VHB 5925	
	-180...250 °C	0...60 °C	0...60 °C	
	—	—	—	
	—	4...8 VDC	3...8 VDC	
	CE	CE, cULus	CE, UL Listed	
	IP66	IP60	IP64	
	Page 340	Page 341	Page 341	

PNP normally open	**BCS006H** BCS S01T401-PSCFNG-KM16-T02	**BCS00A6** BCS S03T401-PSCFNH-KM16-T02	
PNP normally closed	**BCS006J** BCS S01T401-POCFNG-KM16-T02		
NPN normally closed		**BCS00A9** BCS S03T401-NOCFNH-KM16-T02	
Dimension	54.8 x 48.5 x 106 mm	54.8 x 48.5 x 106 mm	
Series	S01	S03	
Thread (A)	M18x1	J 3/8“ NPTF	
Installation	non-flush	non-flush	
Connection	Clamping terminal	Clamping terminal	
Switching frequency	5 Hz	100 Hz	
Interface	—	—	
Range	—	—	
Sensitivity	media-dependent, adjustable	media-dependent, adjustable	
Housing material	Stainless steel (1.4305)	Stainless steel (1.4305)	
Material sensing surface	PTFE	PTFE	
Ambient temperature	-30...125 °C	-30...125 °C	
Pressure rating max.	10 bar	10 bar	
Operating voltage Ub	10...35 VDC	10...35 VDC	
Approval/Conformity	CE	CE	
Protection degree	IP67	IP67	
Productview	Page 341	Page 341	

	BCS006M BCS S02T401-PSCFNG-KM16-T02			
	54.8 x 48.5 x 106 mm			
	S02			
	R 3/8“			
	non-flush			
	Clamping terminal			
	5 Hz			
	—			
	—			
	media-dependent, adjustable			
	Stainless steel (1.4305)			
	PTFE			
	-30...125 °C			
	10 bar			
	10...35 VDC			
	CE			
	IP67			
	Page 341			

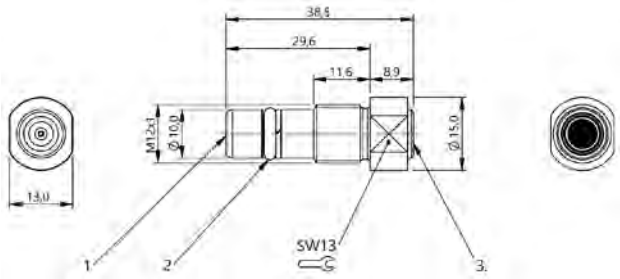

1) Sensing surface, 2) O-Ring with thrust ring, 3) Triaxial connector

BCS013E

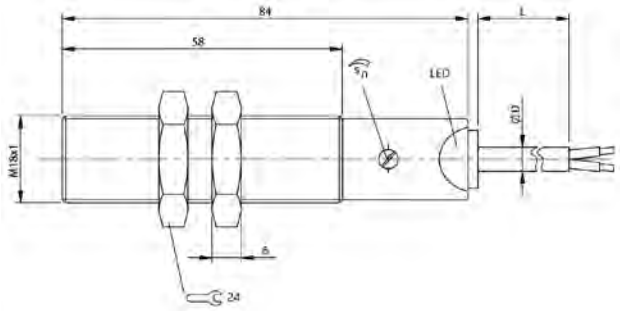

BCS000K, BCS000J

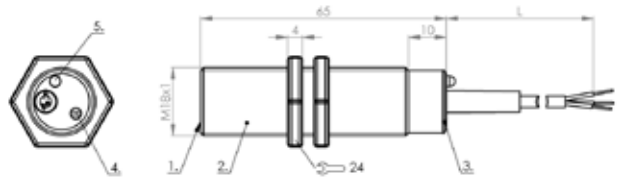

1) Sensing surface, 2) Housing, 3) Cover, 4) Potentiometer, 5) Signal LED

BCW0001

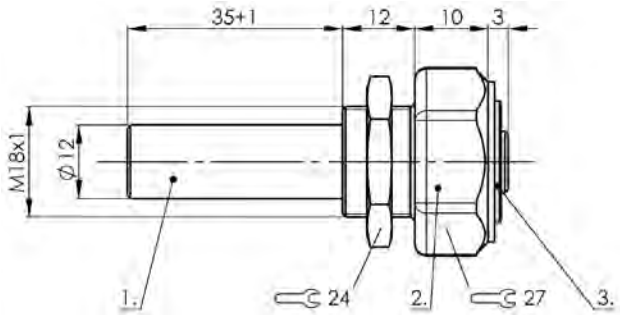

1) Sensing surface, 2) Housing, 3) Cover

BCS00A3

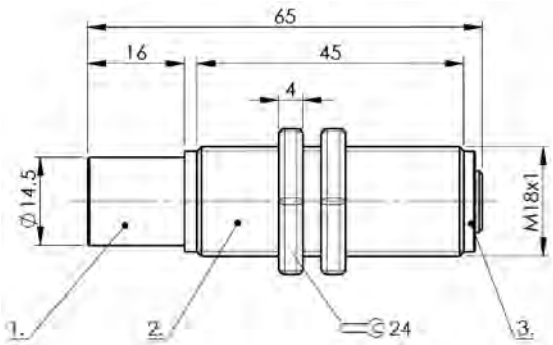

1) Sensing surface, 2) Housing, 3) Cover

BCS00A1

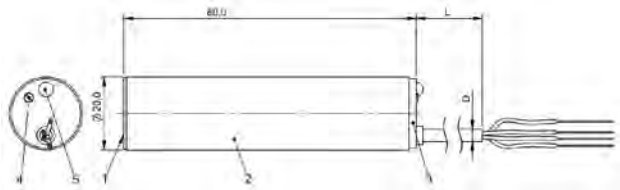

1) Sensing surface, 2) Housing, 3) Cover, 4) Potentiometer, 5) Function indicator yellow

BCS00W7

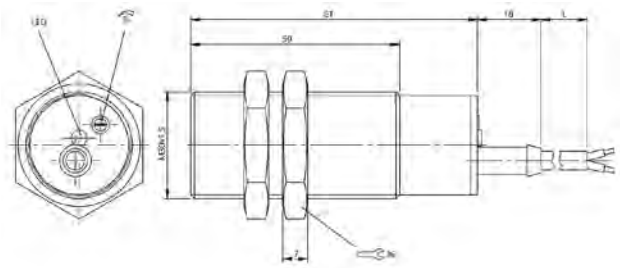

BCS000W, BCS000U

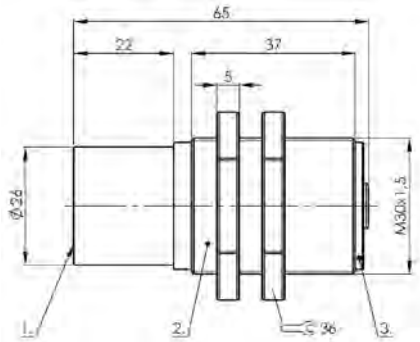

1) Sensing surface, 2) Housing, 3) Cover

BCS00A2

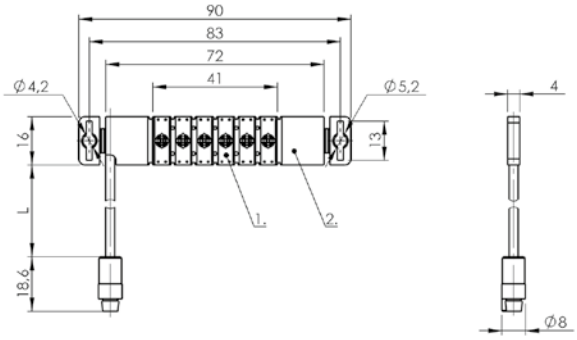

1) Sensing surface, 2) Housing

BCS000Y

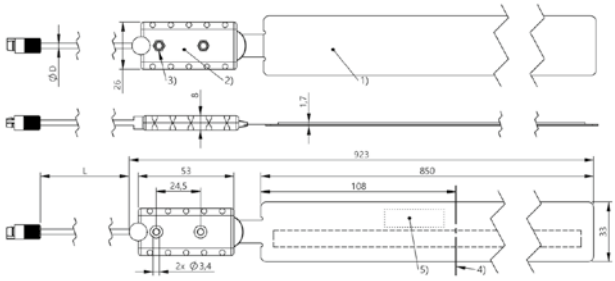

1) Sensing surface, 2) Housing, 03) Fixation, 4) Measuring length min., 05) name plate

BCW0004

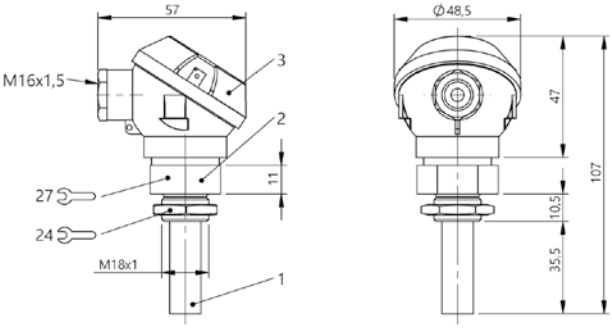

1) Sensing surface, 2) Housing, 3) Cover

BCS006H, BCS006J

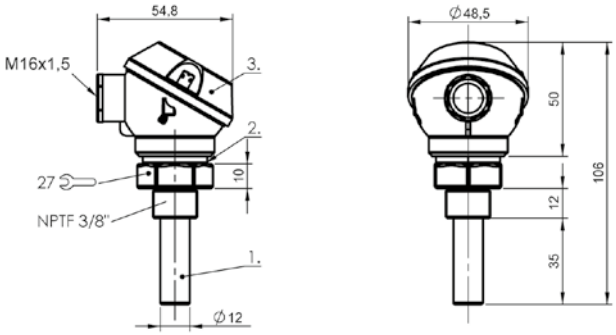

1) Sensing surface, 2) Housing, 3) Cover

BCS00A9, BCS00A6

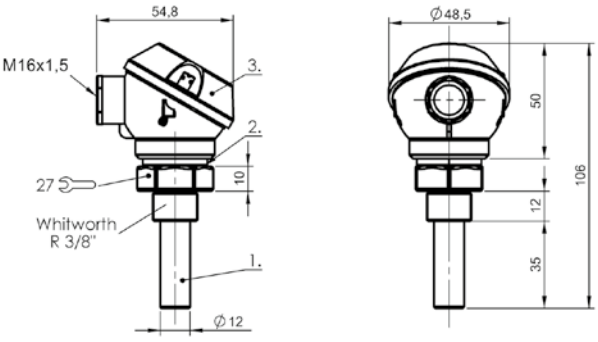

1) Sensing surface, 2) Housing, 3) Cover

BCS006M

Generous detection range for high reliability

PHOTOELECTRIC SENSORS

Photoelectric sensors from Balluff reliably recognize the presence of objects. They check shape, color, distance or thickness equally reliably. This is because they have a significantly greater detection range compared to inductive or capacitive technology.

In the area of photoelectric sensors we offer a huge product variety. Sensors using all light types from red light to infrared to laser technology.
Sensors with the most different ranges, with and without background suppression, as well as many different form factors. For specialty applications, mini-sensors, color sensors, light band and contrast sensors round out our portfolio. With Balluff you achieve not only the highest reliability, but also the greatest flexibility.

The most important benefits

- All light types, all principles
- Different ranges from near to far
- Tailored to the requirements of automation, mounting and handling
- Robust and reliable even under adverse environmental conditions
- Flexibility for planning and installation through well-conceived technical data

R
L

	BOS026R BOS 21M-UUI-RP30-S4
Series	21M
Dimension	15 x 51 x 42.5 mm
Interface	IO-Link 1.1 2x PNP/NPN/push-pull NO/NC
Input function	Reset counter
Principle of operation	Photoelectric sensor
Principle of optical operation	Diffuse energetic, diffuse with background suppression, retroreflective, through-beam (emitter), through-beam (receiver), depends on setting
Special optical feature	Multifunction
Beam characteristic	Divergent
Light type	LED, red light
Light spot size	Ø 50 mm at 1 m
Range	adjustable
Connection	Connector, M12x1 connector, 4-pin
Housing material	Zinc, die-cast Aluminum, glass, PC
Material sensing surface	Glass, anti-glare
Operating voltage Ub	10...30 VDC
Approval/Conformity	CE, EAC, cULus

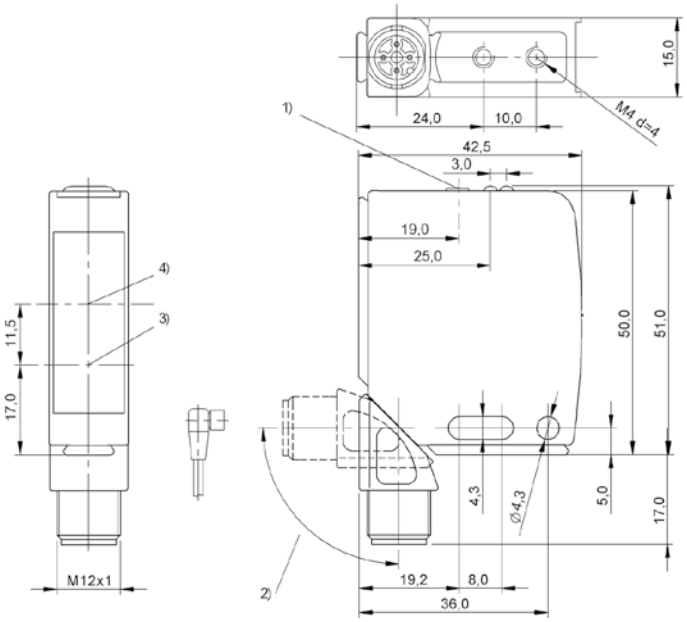

1) Display and control panel, 2) rotatable 270°, 3) Optical axis emitter, 4) Optical axis receiver

BOS026R

PNP normally open	**BOS01R8** BOS 08E-PS-KD20-00,2-S49	**BOS01NN** BOS 08E-PS-KD20-S49	
Series	08E	08E	
Dimension	Ø 8 x 40 mm	Ø 8 x 40 mm	
Input function	—	—	
Principle of operation	Photoelectric sensor	Photoelectric sensor	
Principle of optical operation	Diffuse sensor, energetic	Diffuse sensor, energetic	
Special optical feature	—	—	
Beam characteristic	Divergent	Divergent	
Light type	LED, red light	LED, red light	
Light spot size	Ø 3.0 mm Light exit	Ø 3.0 mm Light exit	
Range	1...60 mm	1...60 mm	
Connection	Cable with connector, 0.20 m, PUR	Connector, M8x1-Male, 3-pin	
Housing material	Stainless steel	Stainless steel	
Material sensing surface	PMMA	PMMA	
Operating voltage Ub	10...30 VDC	10...30 VDC	
Approval/Conformity	cULus, CE, EAC, WEEE	cULus, CE, EAC, WEEE	
Trademark	—	—	
Productview	Page 362	Page 362	

	BOS01Y2 BOS 12M-PS-ID10-S4	BOS01TP BOS 12M-PS-RD10-S4	BOS01TN BOS 12M-PS-RD11-S4	BOS01TU BOS 12M-PS-RD12-S4
	12M	12M	12M	12M
	Ø 12 x 60 mm	Ø 12 x 60 mm	Ø 12 x 60 mm	Ø 12 x 60 mm
	—	—	—	—
	Photoelectric sensor	Photoelectric sensor	Photoelectric sensor	Photoelectric sensor
	Diffuse sensor, energetic	Diffuse sensor, energetic	Diffuse sensor, energetic	Diffuse sensor, energetic
	—	—	—	—
	Divergent	Divergent	Divergent	Divergent
	LED infrared	LED, red light	LED, red light	LED, red light
	45 x 45 mm at 400 mm	28 x 28 mm at 250 mm	Ø 8 mm at 100 mm	22 x 22 mm at 200 mm
	1...400 mm	0...250 mm	1...100 mm	1...200 mm
	Connector, M12x1-Male, 4-pin	Connector, M12x1-Male, 4-pin	Connector, M12x1-Male, 4-pin	Connector, M12x1-Male, 4-pin
	Brass, nickel plated	Brass, nickel plated	Brass, nickel plated	Brass, nickel plated
	PMMA	PMMA	PMMA	PMMA
	10...30 VDC	10...30 VDC	10...30 VDC	10...30 VDC
	CE, cULus, EAC, WEEE	CE, cULus, EAC, WEEE	CE, cULus, EAC, WEEE	CE, cULus, EAC, WEEE
	—	Global	Global	Global
	Page 362	Page 362	Page 362	Page 362

PNP normally open			
PNP normally open, PNP normally closed	**BOS01EY** BOS 18M-PA-ID20-S4	**BOS01NF** BOS 18M-PA-LD20-S4	
PNP normally open/normally closed, IO-Link 1.1			
Series	18M	18M	
Dimension	Ø 18 x 75 mm	Ø 18 x 75 mm	
Input function	—	—	
Principle of operation	Photoelectric sensor	Photoelectric sensor	
Principle of optical operation	Diffuse sensor, energetic	Diffuse sensor, energetic	
Special optical feature	—	—	
Beam characteristic	Divergent	Focus, typical at 400 mm	
Light type	LED infrared	Laser red light	
Light spot size	Ø 50 mm at 600 mm	Ø 2 mm at 250 mm	
Range	1...800 mm	1...250 mm	
Connection	Connector, M12x1-Male, 4-pin	Connector, M12x1-Male, 4-pin	
Housing material	Brass, nickel plated	Brass, nickel plated	
Material sensing surface	Glass, anti-glare	Glass	
Operating voltage Ub	10...30 VDC	10...30 VDC	
Approval/Conformity	cULus, CE, EAC, WEEE	cULus, CE, EAC, WEEE	
Trademark	—	—	
Productview	Page 362	Page 362	

BOS01C1 BOS 18M-PS-RD20-S4	**BOS01E7** BOS 18M-PS-RD21-S4		**BOS01FA** BOS 18M-PS-RD23-S4
BOS01CF BOS 18M-PA-RD20-S4	**BOS01CA** BOS 18M-PA-RD21-S4		
		BOS01UA BOS 18M-PI-RD30-S4	
18M	18M	18M	18M
Ø 18 x 75 mm	Ø 18 x 75 mm	Ø 18 x 75 mm	Ø 18 x 75 mm
–	–	–	–
Photoelectric sensor	Photoelectric sensor	Photoelectric sensor	Photoelectric sensor
Diffuse sensor, energetic	Diffuse sensor, energetic	Diffuse sensor, energetic	Diffuse sensor, energetic
–	–	–	–
Divergent	Divergent	Divergent	Divergent
LED, red light	LED, red light	LED, red light	LED, red light
Ø 50 mm at 600 mm	Ø 25 mm at 300 mm	Ø 50 mm at 600 mm	Ø 25 mm at 300 mm
0...600 mm	0...300 mm	1...500 mm	0...400 mm
Connector, M12x1-Male, 4-pin	Connector, M12x1-Male, 4-pin	Connector, M12x1-Male, 4-pin	Connector, M12x1-Male, 4-pin
Brass, nickel plated	Brass, nickel plated	Brass, nickel plated	Brass, nickel plated
Glass, anti-glare	Glass, anti-glare	Glass	Glass, anti-glare
10...30 VDC	10...30 VDC	18...30 VDC	10...30 VDC
CE, cULus, EAC, WEEE	CE, cULus, EAC, WEEE	cULus, CE, EAC, WEEE	cULus, CE, EAC, WEEE
–	–	–	–
Page 362	Page 362	Page 362	Page 362

PNP normally open			
PNP normally open, PNP normally closed		**BOS01KE** BOS 18E-PA-RD20-S4	
PNP normally open/normally closed	**BOS01J8** BOS 18M-PUV-RD30-S4		
Series	18M	18E	
Dimension	Ø 18 x 75 mm	Ø 18 x 75 mm	
Input function	—	—	
Principle of operation	Photoelectric sensor	Photoelectric sensor	
Principle of optical operation	Diffuse sensor, energetic	Diffuse sensor, energetic	
Special optical feature	—	—	
Beam characteristic	Divergent	Divergent	
Light type	LED, red light	LED, red light	
Light spot size	Ø 50 mm at 600 mm	Ø 50 mm at 600 mm	
Range	0...500 mm	500 mm	
Connection	Connector, M12x1-Male, 4-pin	Connector, M12x1-Male, 4-pin	
Housing material	Brass, nickel plated	Stainless steel (1.4404)	
Material sensing surface	Glass	Glass	
Operating voltage Ub	10...30 VDC	10...30 VDC	
Approval/Conformity	CE, cULus, EAC, WEEE	CE, cULus, Ecolab, FDA compliant, EAC, WEEE	
Trademark	—	—	
Productview	Page 362	Page 363	

		BOS01NA BOS 18KF-PA-1XA-SA1-C-00,2		
	BOS00LT BOS 18KW-PA-1PD-S4-C		**BOS00K9** BOS 18KF-PA-1XA-S4-C	**BOS00K0** BOS 18KF-PA-1PE-C-02
	18KW	18KF	18KF	18KF
	Ø 18 x 93.5 mm	Ø 18 x 67 mm	Ø 18 x 71.5 mm	Ø 18 x 77 mm
	—	—	—	—
	Photoelectric sensor	Photoelectric sensor	Photoelectric sensor	Photoelectric sensor
	Diffuse sensor, energetic	Diffuse sensor, energetic	Diffuse sensor, energetic	Diffuse sensor, energetic
	—	—	—	—
	Divergent	Divergent	Divergent	Divergent
	LED infrared	Infrared	LED infrared	LED infrared
	Ø 100 mm at 300 mm	Ø 80 mm at 100 mm	Ø 80 mm at 100 mm	Ø 200 mm at 600 mm
	0...400 mm	0...100 mm	0...100 mm	0...700 mm
	Connector, M12x1-Male, 4-pin	Cable with connector, Molex Mini-Fit 4.2, 4-pin, 0.19 m, PVC	Connector, M12x1-Male, 4-pin	Cable, 2.00 m, PVC
	PBT	PBT	PBT	PBT
	PMMA	PMMA	PMMA	PMMA
	10...30 VDC	10...30 VDC	10...30 VDC	10...30 VDC
	CE, cULus, EAC, WEEE	CE, EAC, WEEE	CE, cULus, EAC, WEEE	CE, cULus, EAC, WEEE
	Global	—	Global	Global
	Page 363	Page 363	Page 363	Page 363

Do you need more details? Our Product Finder at www.balluff.com provides you with product-specific information, including technical drawings, data sheets, user guides and more for each individual product. All items are available for download.

PNP normally open			
PNP normally open, PNP normally closed	**BOS00JZ** BOS 18KF-PA-1PD-S4-C	**BOS00K1** BOS 18KF-PA-1PE-S4-C	
Series	18KF	18KF	
Dimension	Ø 18 x 81.5 mm	Ø 18 x 81.5 mm	
Input function	—	—	
Principle of operation	Photoelectric sensor	Photoelectric sensor	
Principle of optical operation	Diffuse sensor, energetic	Diffuse sensor, energetic	
Special optical feature	—	—	
Beam characteristic	Divergent	Divergent	
Light type	LED infrared	LED infrared	
Light spot size	Ø 100 mm at 300 mm	Ø 200 mm bei 600 mm	
Range	0...400 mm	0...700 mm	
Connection	Connector, M12x1-Male, 4-pin	Connector, M12x1-Male, 4-pin	
Housing material	PBT	PBT	
Material sensing surface	PMMA	PMMA	
Operating voltage Ub	10...30 VDC	10...30 VDC	
Approval/Conformity	CE, cULus, EAC, WEEE	CE, cULus, EAC, WEEE	
Trademark	Global	Global	
Productview	Page 363	Page 363	

	BOS00JP BOS 18KF-PA-1L0C-S4-C	BOS01WC BOS Q08M-PS-LD20-S49	BOS01RZ BOS Q08M-PS-KD20-00,2-S49	BOS01RJ BOS Q08M-PS-KD20-S49
	18KF	Q08M	Q08M	Q08M
	Ø 18 x 81.5 mm	8 x 59 x 8 mm	8 x 44 x 8 mm	8 x 59 x 8 mm
	—	—	—	—
	Photoelectric sensor	Photoelectric sensor	Photoelectric sensor	Photoelectric sensor
	Diffuse sensor, energetic	Diffuse sensor, energetic	Diffuse sensor, energetic	Diffuse sensor, energetic
	—	—	—	—
	Divergent	Collimated	Divergent	Divergent
	Laser red light	Laser red light	LED, red light	LED, red light
	Ø 1 mm at 150 mm	Ø 3.0 mm Light exit	Ø 3.0 mm Light exit	Ø 3.0 mm Light exit
	0...350 mm	60 mm	1...60 mm	1...60 mm
	Connector, M12x1-Male, 4-pin	Connector, M8x1-Male, 3-pin	Cable with connector, 0.20 m, PUR	Connector, M8x1-Male, 3-pin
	PBT	Zinc, Die casting, nickel plated	Zinc, Die casting, nickel plated	Zinc, Die casting, nickel plated
	PMMA	PMMA	PMMA	PMMA
	10...30 VDC	10...30 VDC	10...30 VDC	10...30 VDC
	CE, cULus, EAC, WEEE	cULus, CE, EAC, WEEE	cULus, CE, EAC, WEEE	cULus, CE, EAC, WEEE
	Global	—	—	—
	Page 363	Page 364	Page 364	Page 364

PNP normally open	**BOS021J** BOS R01E-PS-KD20-00,2-S49	**BOS021K** BOS R01E-PS-KD20-02	
Series	R01E	R01E	
Dimension	20 x 32 x 9 mm	20 x 32 x 9 mm	
Input function	—	—	
Principle of operation	Photoelectric sensor	Photoelectric sensor	
Principle of optical operation	Diffuse sensor, energetic	Diffuse sensor, energetic	
Special optical feature	—	—	
Beam characteristic	Divergent	Divergent	
Light type	LED, red light	LED, red light	
Light spot size	Ø 3.0 mm Light exit	Ø 3.0 mm Light exit	
Range	1...100 mm	1...100 mm	
Connection	Cable with connector, M8x1-Male, 3-pin, 0.20 m, PUR	Cable, 2.00 m, PUR	
Housing material	Stainless steel (1.4404)	Stainless steel (1.4404)	
Material sensing surface	PA	PA	
Operating voltage Ub	10...30 VDC	10...30 VDC	
Approval/Conformity	cULus, CE, Ecolab, EAC, WEEE	cULus, CE, Ecolab, EAC, WEEE	
Trademark	—	—	
Productview	Page 364	Page 364	

	BOS0123 BOS 5K-PS-ID10-02	BOS015J BOS 5K-PS-ID10-S49	BOS0124 BOS 5K-PS-ID10-S75	BOS0127 BOS 5K-PS-RD11-02
	5K	5K	5K	5K
	10.8 x 32.7 x 19.5 mm	10.8 x 43.5 x 19.5 mm	10.8 x 43.5 x 19.5 mm	10.8 x 32.7 x 19.5 mm
	—	—	—	—
	Photoelectric sensor	Photoelectric sensor	Photoelectric sensor	Photoelectric sensor
	Diffuse sensor, energetic	Diffuse sensor, energetic	Diffuse sensor, energetic	Diffuse sensor, energetic
	—	—	—	—
	Divergent	Divergent	Divergent	Divergent
	Infrared	Infrared	Infrared	LED, red light
	Ø 50 mm at 500 mm	Ø 50 mm at 500 mm	Ø 50 mm at 500 mm	Ø 8 mm at 180 mm
	0...900 mm	0...900 mm	0...900 mm	50...200 mm
	Cable, 2.00 m, PVC	Connector, M8x1-Male, 3-pin	Connector, M8x1-Male, 4-pin	Cable, 2.00 m, PVC
	PC PBT	PC PBT	PC PBT	PC PBT
	PMMA	PMMA	PMMA	PC
	10...30 VDC	10...30 VDC	10...30 VDC	10...30 VDC
	cULus, CE, EAC, WEEE	cULus, CE, EAC, WEEE	cULus, CE, EAC, WEEE	cULus, CE, WEEE, EAC
	Global	Global	Global	Global
	Page 364	Page 364	Page 364	Page 364

PNP normally open	**BOS015N** BOS 5K-PS-RD11-S49	**BOS0128** BOS 5K-PS-RD11-S75	
PNP normally open, PNP normally closed			
Series	5K	5K	
Dimension	10.8 x 43.5 x 19.5 mm	10.8 x 43.5 x 19.5 mm	
Input function	—	—	
Principle of operation	Photoelectric sensor	Photoelectric sensor	
Principle of optical operation	Diffuse sensor, energetic	Diffuse sensor, energetic	
Special optical feature	—	—	
Beam characteristic	Divergent	Divergent	
Light type	LED, red light	LED, red light	
Light spot size	Ø 8 mm at 180 mm	Ø 8 mm at 180 mm	
Range	50...200 mm	50...200 mm	
Connection	Connector, M8x1-Male, 3-pin	Connector, M8x1-Male, 4-pin	
Housing material	PC PBT	PC PBT	
Material sensing surface	PC	PC	
Operating voltage Ub	10...30 VDC	10...30 VDC	
Approval/Conformity	cULus, CE, WEEE, EAC	cULus, CE, WEEE, EAC	
Trademark	Global	Global	
Productview	Page 364	Page 364	

	BOS0031 BOS 21M-PA-ID10-S4	**BOS0032** BOS 21M-PA-LD10-S4	**BOS0033** BOS 21M-PA-RD10-S4	
	21M	21M	21M	
	15 x 50 x 42.5 mm	15 x 50 x 42.5 mm	15 x 50 x 42.5 mm	
	—	—	—	
	Photoelectric sensor	Photoelectric sensor	Photoelectric sensor	
	Diffuse sensor, energetic	Diffuse sensor, energetic	Diffuse sensor, energetic	
	—	—	—	
	Divergent	Collimated	Divergent	
	LED infrared	Laser red light	LED, red light	
	—	—	—	
	50...2000 mm	0...600 mm	10...1000 mm	
	Connector, M12x1-Male, 4-pin	Connector, M12x1-Male, 4-pin	Connector, M12x1-Male, 4-pin	
	Zinc, Die casting, Powder coated Aluminum	Zinc, Die casting, Powder coated Aluminum	Zinc, Die casting, Powder coated Aluminum	
	PMMA	PMMA	PMMA	
	10...30 VDC	10...30 VDC	10...30 VDC	
	CE, cULus, EAC, WEEE	CE, cULus, EAC, WEEE	CE, cULus, EAC, WEEE	
	—	—	—	
	Page 365	Page 365	Page 365	

PNP normally open			
PNP normally open/normally closed, IO-Link 1.1	**BOS027N** BOS 21M-PAI-RD30-S4		
PNP normally open/normally closed		**BOS0175** BOS 23K-PU-LD20-S4	
Series	21M	23K	
Dimension	15.4 x 51.1 x 42.7 mm	23 x 51 x 52.4 mm	
Input function	—	Key disable on/off, Same function as button	
Principle of operation	Photoelectric sensor	Photoelectric sensor	
Principle of optical operation	Diffuse sensor, energetic	Diffuse sensor, energetic	
Special optical feature	—	—	
Beam characteristic	Divergent	Collimated	
Light type	LED, red light	Laser red light	
Light spot size	—	2.2 x 2.2 mm at 800 mm	
Range	10...1000 mm	5...1200 mm	
Connection	Connector, M12x1-Male, 4-pin	Connector, M12x1-Male, 4-pin	
Housing material	Zinc, Die casting, Powder coated Die-cast zinc	PC ABS	
Material sensing surface	PMMA	PMMA	
Operating voltage Ub	10...30 VDC	10...30 VDC	
Approval/Conformity	CE, cULus, WEEE, EAC, Ecolab	CE, Ecolab, cULus, EAC, WEEE	
Trademark	—	—	
Productview	Page 365	Page 365	

		BOS01FM BOS 23K-PA-RD10-S4		
	BOS016Z BOS 23K-PU-RD10-S4		**BOS016Z** BOS 23K-PU-RD10-S4	
	23K	23K	23K	
	23 x 51 x 52.4 mm	23 x 51 x 52.4 mm	23 x 51 x 52.4 mm	
	Key disable on/off, Same function as button	—	Key disable on/off, Same function as button	
	Photoelectric sensor	Photoelectric sensor	Photoelectric sensor	
	Diffuse sensor, energetic	Diffuse sensor, energetic	Diffuse sensor, energetic	
	—	—	—	
	Focus, typical at 500 mm	Focus, typical at 500 mm	Focus, typical at 500 mm	
	LED, red light	LED, red light	LED, red light	
	15 x 15 mm at focal point	15 x 15 mm at focal point	15 x 15 mm at focal point	
	0...2000 mm	0...2000 mm	0...2000 mm	
	Connector, M12x1-Male, 4-pin	Connector, M12x1-Male, 4-pin	Connector, M12x1-Male, 4-pin	
	PC ABS	PC ABS	PC ABS	
	PMMA	PMMA	PMMA	
	10...30 VDC	10...30 VDC	10...30 VDC	
	Ecolab, CE, cULus, EAC, WEEE	Ecolab, CE, cULus, EAC, WEEE	Ecolab, CE, cULus, EAC, WEEE	
	—	—	—	
	Page 365	Page 365	Page 365	

PNP normally open	**BOS01CJ** BOS 50K-PA-RD10-S4		
PNP normally open/normally closed, IO-Link 1.1		**BOS01JJ** BOS 50K-PI-RD11-S4	
PNP normally open/normally closed			
Relay normally open/normally closed			
Series	50K	50K	
Dimension	28.5 x 80.5 x 62 mm	28.5 x 80.5 x 62 mm	
Input function	—	—	
Principle of operation	Photoelectric sensor	Photoelectric sensor	
Principle of optical operation	Diffuse sensor, energetic	Diffuse sensor, energetic	
Special optical feature	—	—	
Beam characteristic	Divergent	Divergent	
Light type	LED, red light	LED, red light	
Light spot size	50 x 50 mm at 2 m	80 x 80 mm at Sr	
Range	1...2000 mm	1...3500 mm	
Connection	Connector, M12x1-Male, 4-pin	Connector, M12x1-Male, 4-pin	
Housing material	PC ABS	PC ABS	
Material sensing surface	Glass	Glass	
Operating voltage Ub	10...30 VDC	10...30 VDC	
Approval/Conformity	CE, cULus, EAC, WEEE	CE, cULus, EAC, WEEE	
Trademark	—	—	
Productview	Page 365	Page 365	

	BOS01JA BOS 50K-PU-RD11-S4			
		BOS01K2 BOS 64K-AA-ID10-TG		
	50K	64K		
	28.5 x 80.5 x 62 mm	25 x 69.7 x 100.4 mm		
	—	—		
	Photoelectric sensor	Photoelectric sensor		
	Diffuse sensor, energetic	Diffuse sensor, energetic		
	—	—		
	Divergent	Divergent		
	LED, red light	Infrared		
	80 x 80 mm at Sr	—		
	1...3500 mm	50...2000 mm		
	Connector, M12x1-Male, 4-pin	Screw terminals		
	PC ABS	PBT, GF30		
	Glass	PC		
	10...30 VDC	24...60 VDC/24...240 VAC		
	cULus, CE, EAC, WEEE	CE, cULus, EAC, WEEE		
	—	—		
	Page 365	Page 365		

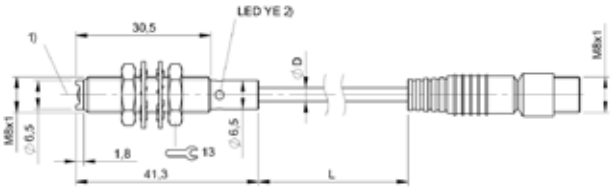

1) Optical axis, 2) Output function

BOS01R8

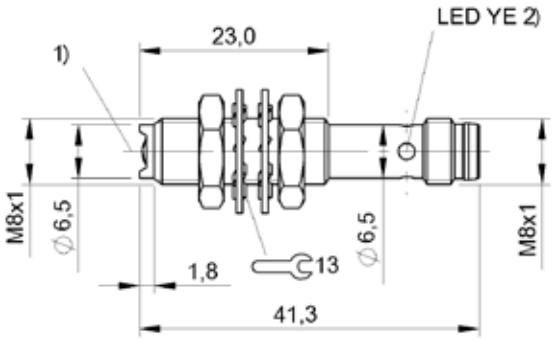

1) Optical axis, 2) Output function

BOS01NN

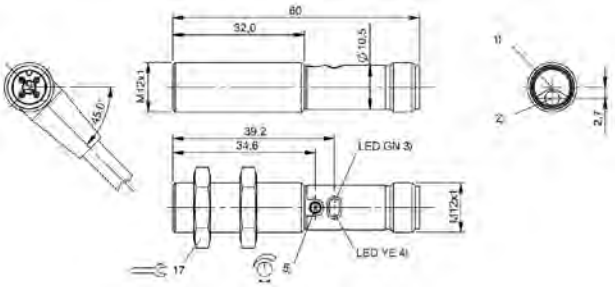

1) Optical axis receiver, 2) Optical axis emitter, 3) Operating voltage,
4) Light reception/limit area, 5) Sn

BOS01Y2, BOS01TP

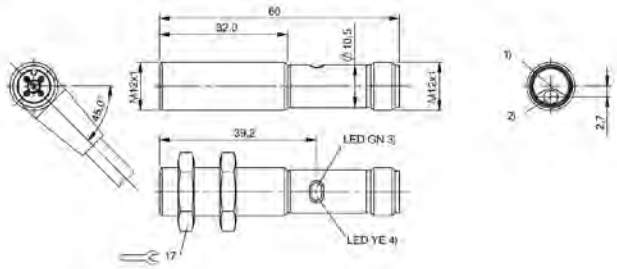

1) Optical axis receiver, 2) Optical axis emitter, 3) Operating voltage,
4) Light reception/limit area

BOS01TN, BOS01TU

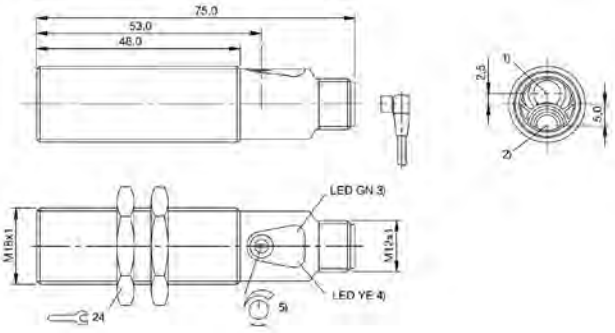

1) Optical axis receiver, 2) Optical axis emitter, 3) Operating voltage,
4) Light reception/limit area, 5) Sn

BOS01EY, BOS01CF, BOS01CA, BOS01C1, BOS01E7

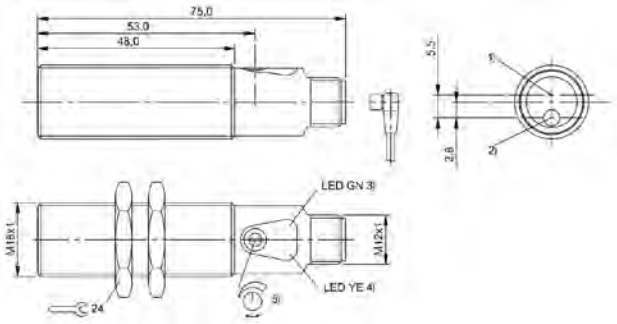

1) Optical axis receiver, 2) Optical axis emitter, 3) Operating voltage/Error,
4) Light reception/limit area, 5) Sn

BOS01NF

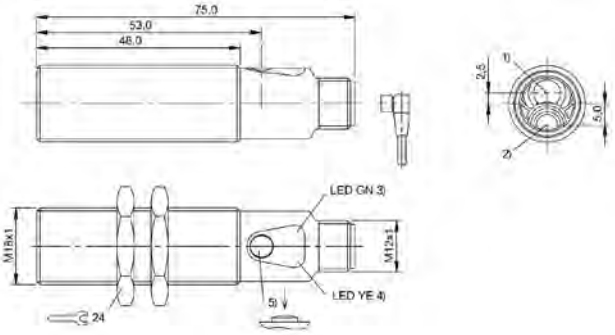

1) Optical axis receiver, 2) Optical axis emitter, 3) Power/short-circuit,
4) Light reception/limit area, 5) Sn

BOS01UA, BOS01J8

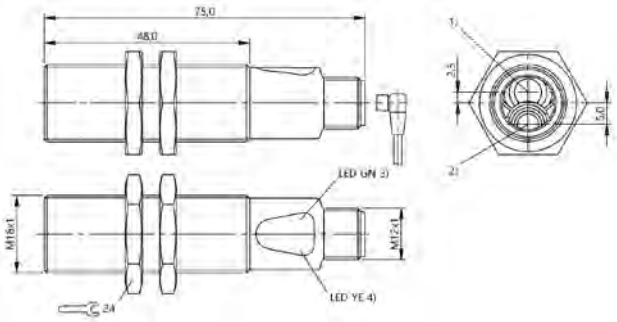

1) Optical axis receiver, 2) Optical axis emitter, 3) Operating voltage, 4) Light reception/limit area

BOS01FA

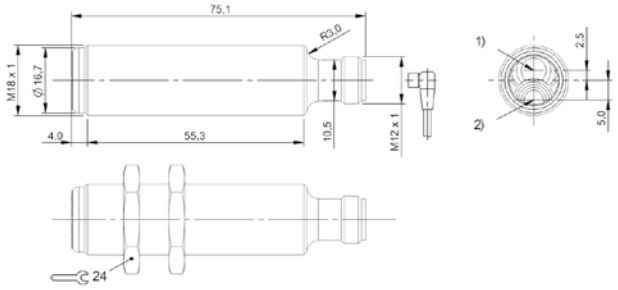

1) Optical axis receiver, 2) Optical axis emitter

BOS01KE, BOS023R, BOS023E

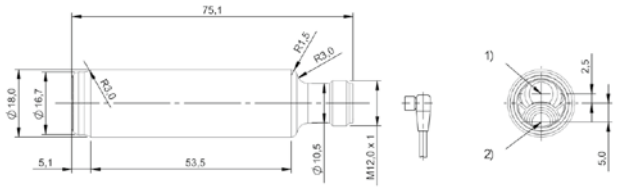

1) Optical axis receiver, 2) Optical axis emitter

BOS01KH, BOS0240

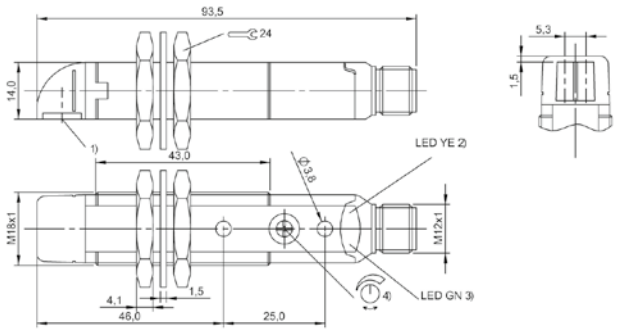

1) Optical axis, 2) Output function, 3) Stability, 4) Sn

BOS00LT

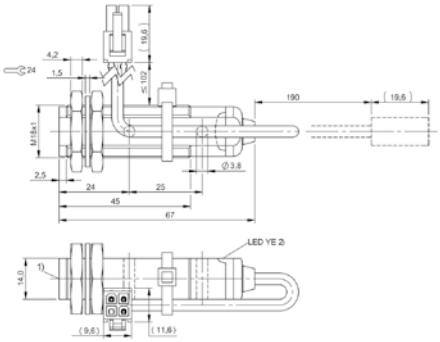

1) Optical axis, 2) Output function

BOS01NA

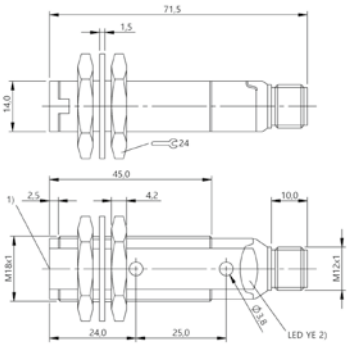

1) Optical axis, 2) Output function

BOS00K9

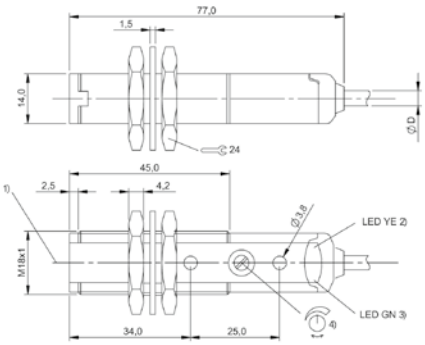

1) Optical axis, 2) Output function, 3) Stability, 4) Sn

BOS00K0

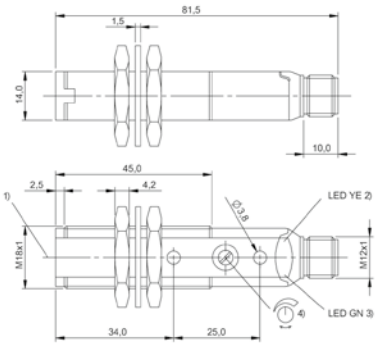

1) Optical axis, 2) Output function, 3) Stability, 4) Sn

BOS00JZ, BOS00K1

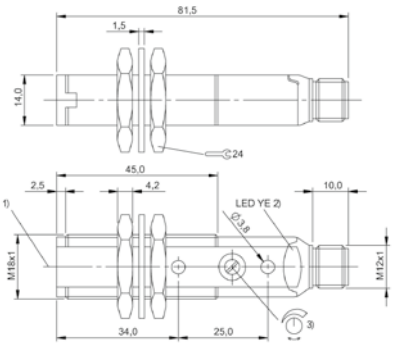

1) Optical axis, 2) Output function, 3) Sn

BOS00JP

Do you need more details? Our Product Finder at www.balluff.com provides you with product-specific information, including technical drawings, data sheets, user guides and more for each individual product. All items are available for download.

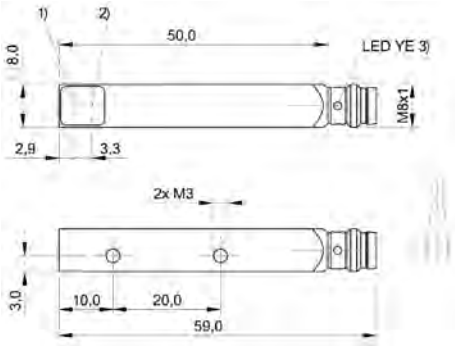

1) Optical axis emitter, 2) Optical axis receiver, 3) Output function

BOS01WC, BOS01RJ

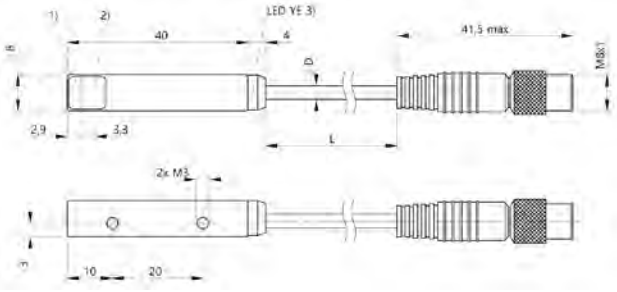

1) Optical axis emitter, 2) Optical axis receiver, 3) Output function

BOS01RZ

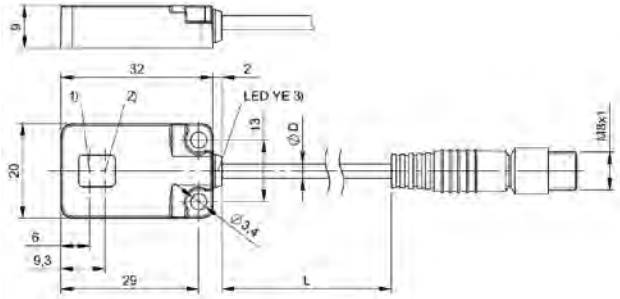

1) Optical axis emitter, 2) Optical axis receiver, 3) Output function

BOS021J

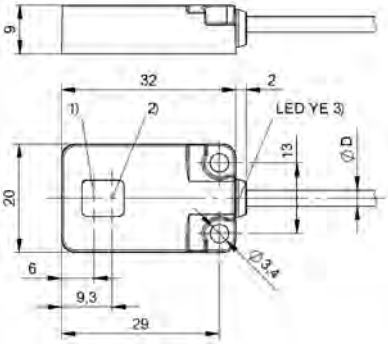

1) Optical axis emitter, 2) Optical axis receiver, 3) Output function

BOS021K

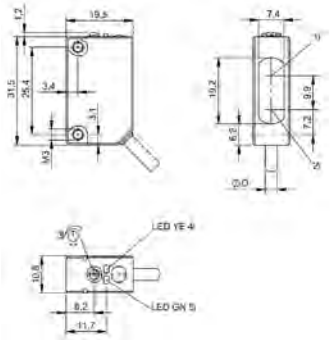

1) Optical axis receiver, 2) Optical axis emitter, 3) Sn, 4) Output function, 5) stability

BOS0123

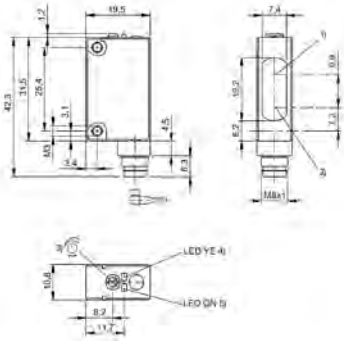

1) Optical axis receiver, 2) Optical axis emitter, 3) Sn, 4) Output function, 5) stability

BOS015J, BOS0124

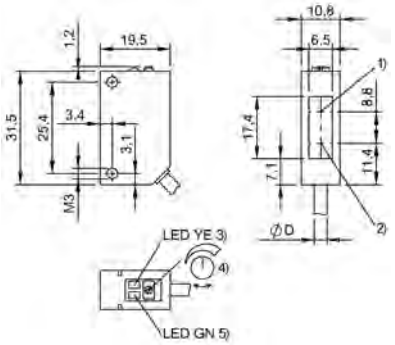

1) Optical axis receiver, 2) Optical axis emitter, 3) Output function, 4) Sn, 5) stability

BOS0127

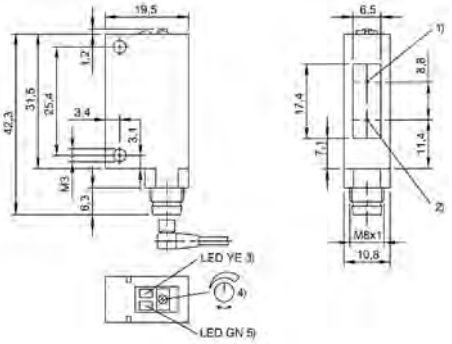

1) Optical axis receiver, 2) Optical axis emitter, 3) Output function, 4) Sn, 5) stability

BOS015N, BOS0128

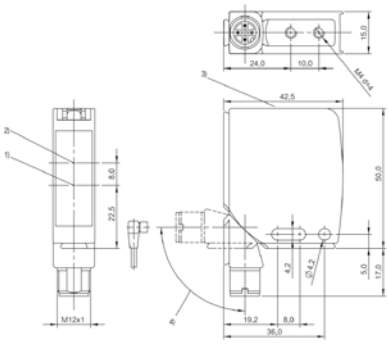

1) Optical axis emitter, 2) Optical axis receiver, 3) Display and control panel, 4) rotatable 270°

BOS0031, BOS0032, BOS0033

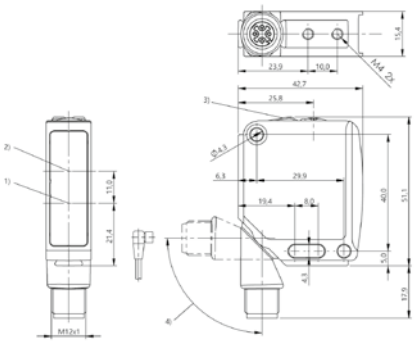

1) Optical axis emitter, 2) Optical axis receiver, 3) Display and control panel, 4) 240° rotatable

BOS027N

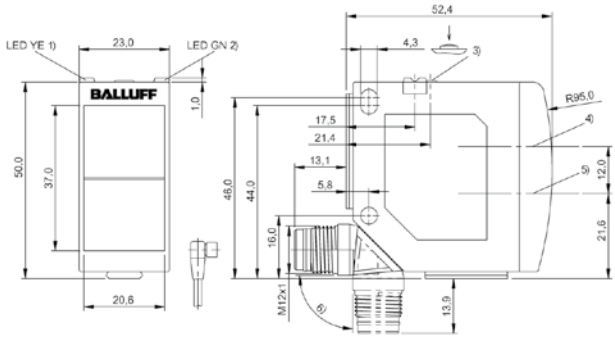

1) Output function/Error, 2) Operating voltage, 3) Sn, light/dark, 4) Optical axis receiver,
5) Optical axis emitter, 6) rotatable 270°

BOS0175

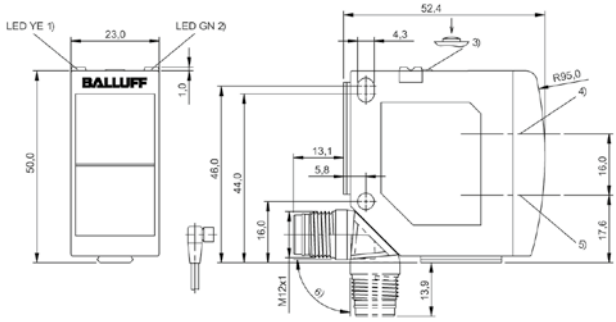

1) Output function/Error, 2) Power/setting mode, 3) Sn, light/dark, 4) Optical axis receiver,
5) Optical axis emitter, 6) rotatable 270°

BOS01FM, BOS016Z

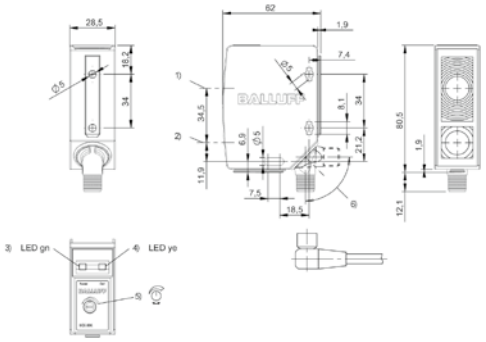

1) Optical axis receiver, 2) Optical axis emitter, 3) Operating voltage, 4) Light reception/limit area,
5) Sn, 6) rotatable 270°

BOS01CJ

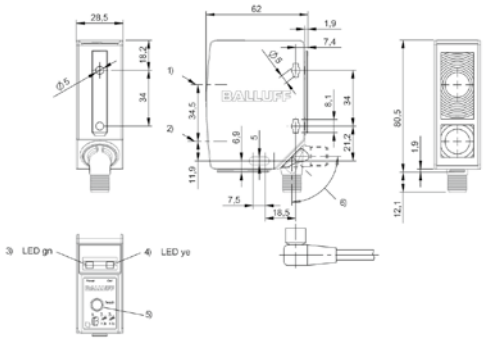

1) Optical axis receiver, 2) Optical axis emitter, 3) Operating voltage, 4) Light reception,
5) Teach-In button, 6) rotatable 270°

BOS01JJ, BOS01JA

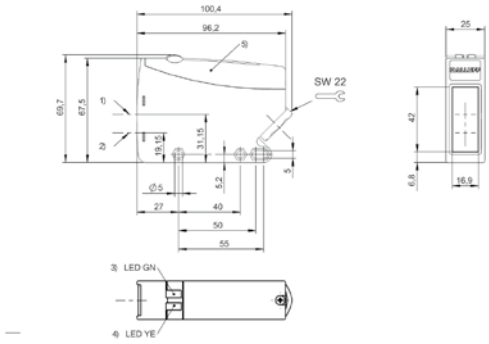

1) Optical axis receiver, 2) Optical axis emitter, 3) Stability, 4) Output function,
5) Removable cover

BOS01K2

Diffuse sensor BOS 5K-_ _-ID10-_ _

Receiving characteristics

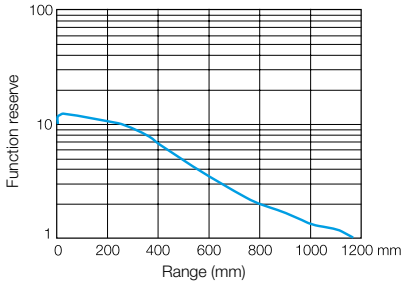

Characteristic response curve

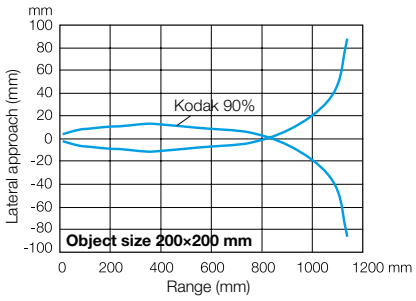

Object size vs. hysteresis

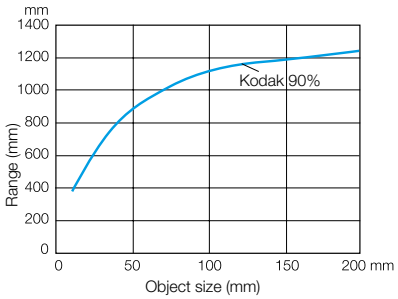

Diffuse sensor, small beam BOS 5K-_ _-RD11-_ _

Receiving characteristics

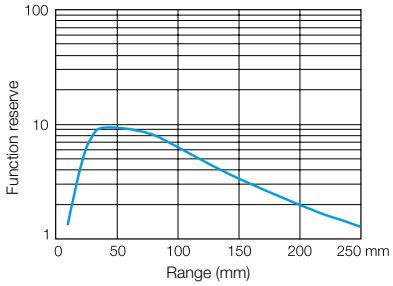

Characteristic response curve

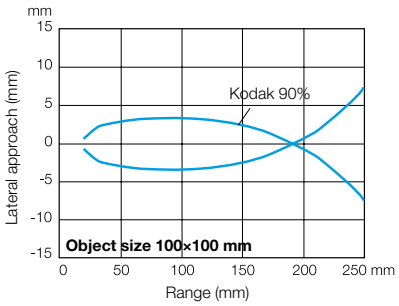

Object size vs. hysteresis

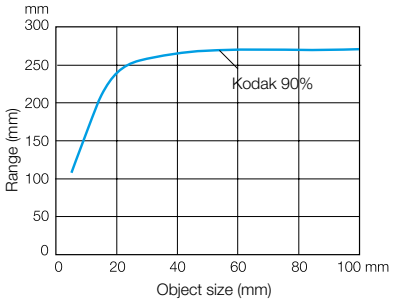

Diffuse sensor BOS 12M-..-1YA/1YB/1PD-...

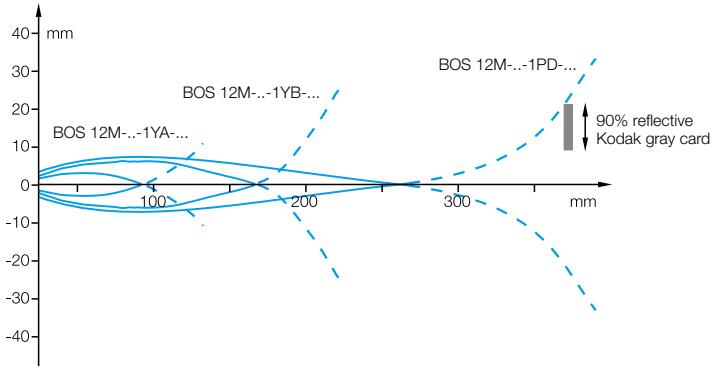

Sensing distance measured with side approach of Kodak gray card.

Diffuse sensor BOS 18M...RD function reserve

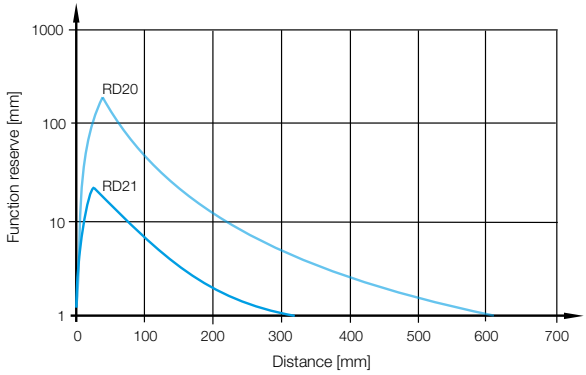

Diffuse sensor BOS 18M...RD20 Response curve

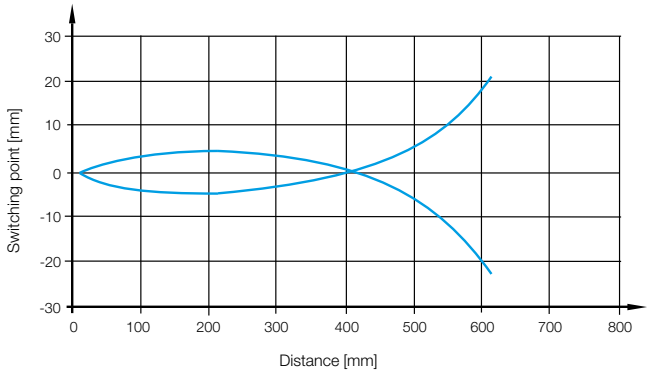

Diffuse sensor BOS 18M...ID20-S4 response curve

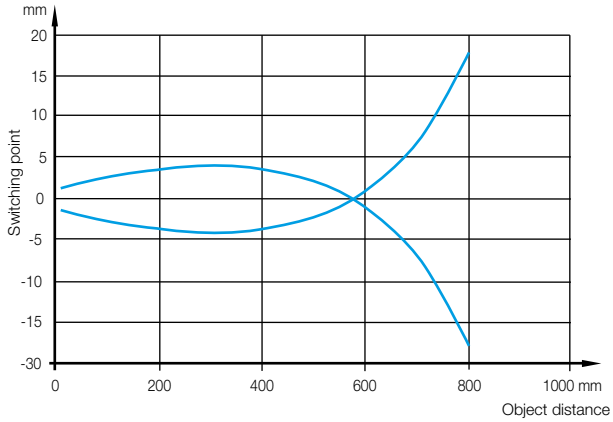

Diffuse sensor BOS 18M...RD21.. Response curve

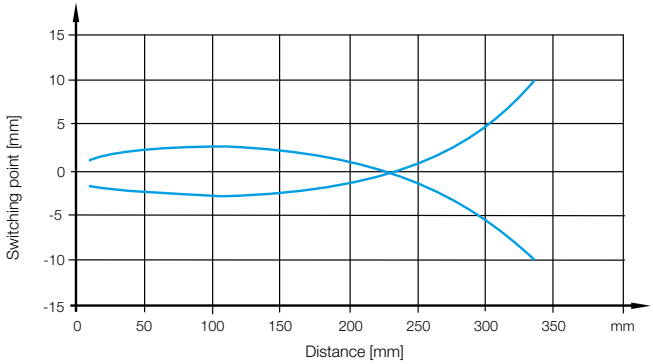

Diffuse sensor BOS 18M...RD23 response curve

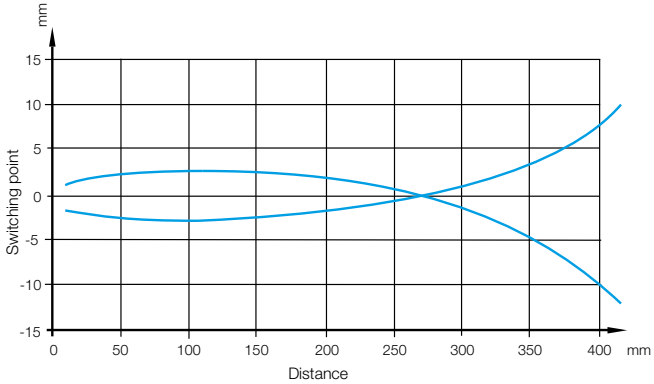

Diffuse sensor BOS 18M...RD23 function reserve

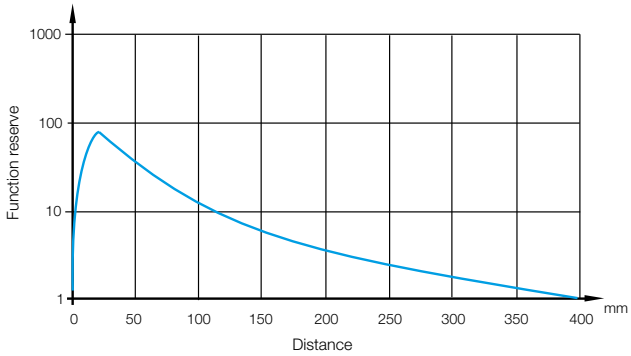

Diffuse sensor BOS 18M-..-LD10-...

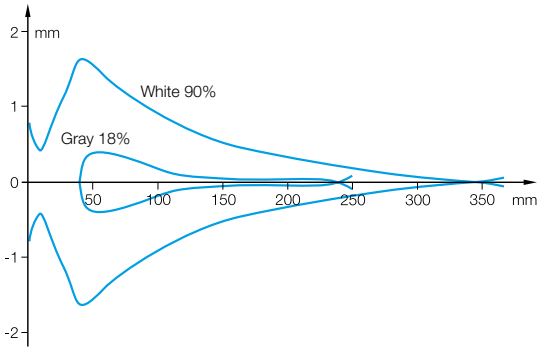

Detection range

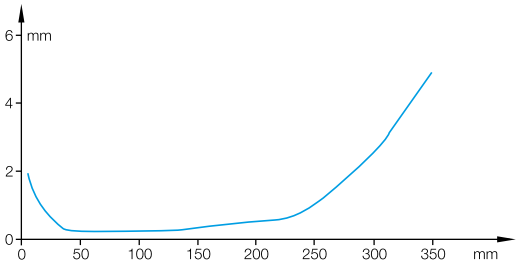

Resolution

Diffuse sensor BOS 18MR-..-LD10-...

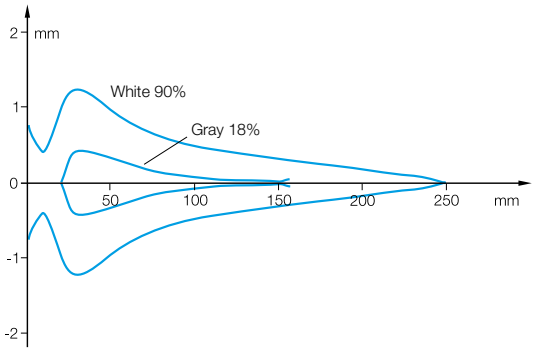

Detection range

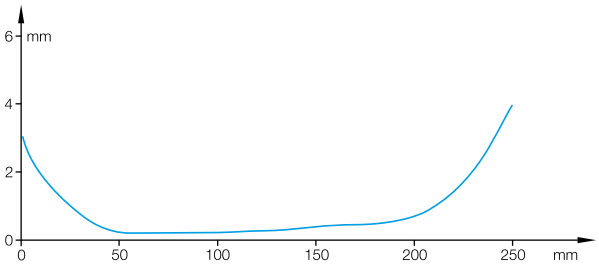

Resolution

Diffuse sensor BOS 18E-...-1YA-...

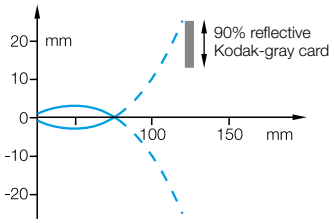

Sensing distance with side approach of Kodak-gray card.

Diffuse sensor BOS 18E-...-1YB-...

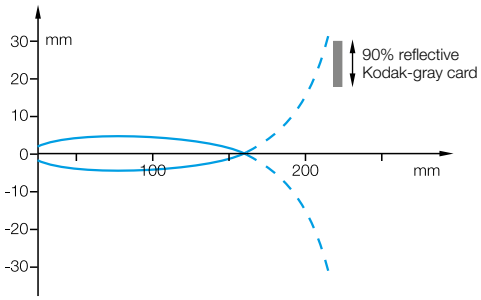

Sensing distance with side approach of Kodak-gray card.

Diffuse sensor BOS 18E-...-1YD-...

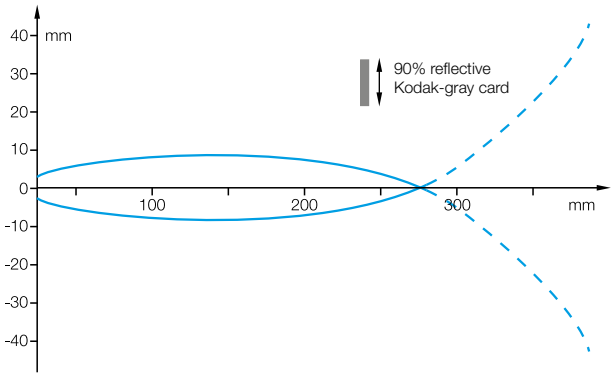

Sensing distance with side approach of Kodak-gray card.

Diffuse sensor BOS 18KF-..-1HA-...

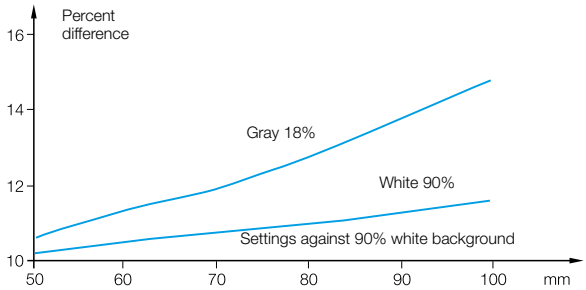

Tolerance with standard setting

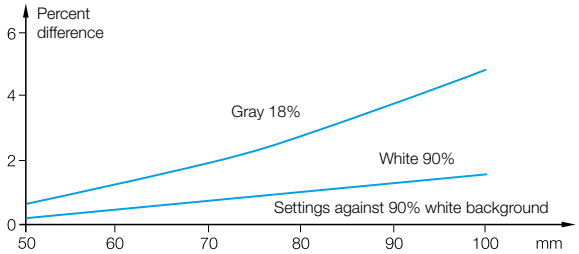

Tolerance with fine setting

Diffuse sensor BOS 18KF-..-1N1R-...

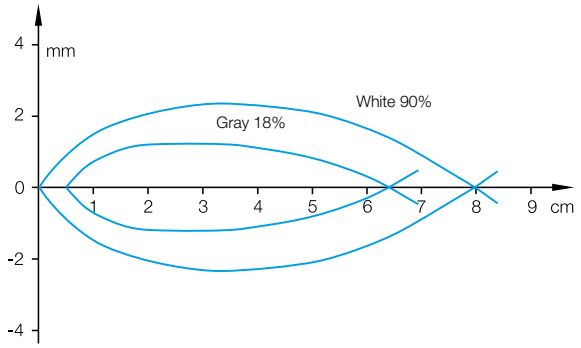

Detection range

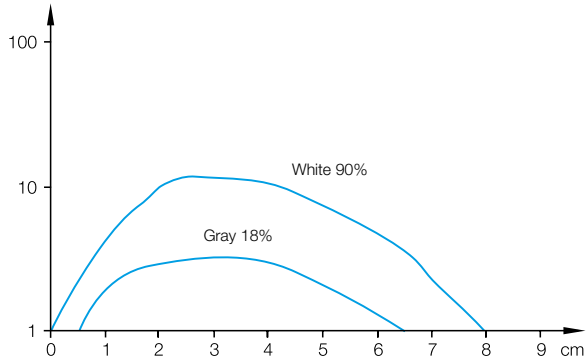

Function reserve

Diffuse sensor BOS 18KF-..-1XA-...

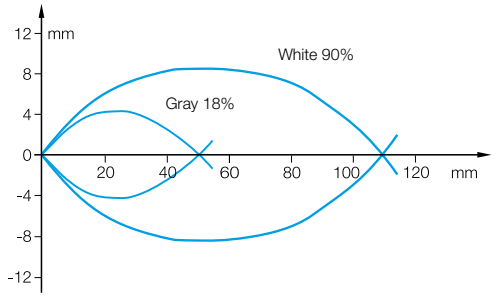

Detection range

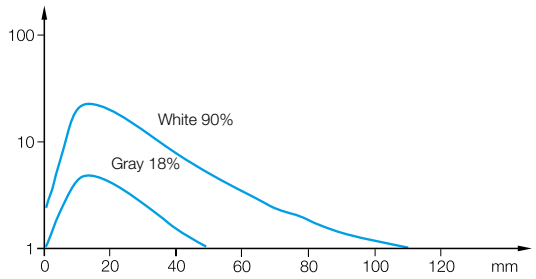

Function reserve

Do you need more details? Our Product Finder at www.balluff.com provides you with product-specific information, including technical drawings, data sheets, user guides and more for each individual product. All items are available for download.

Diffuse sensor BOS 18KF-..-1GA-...

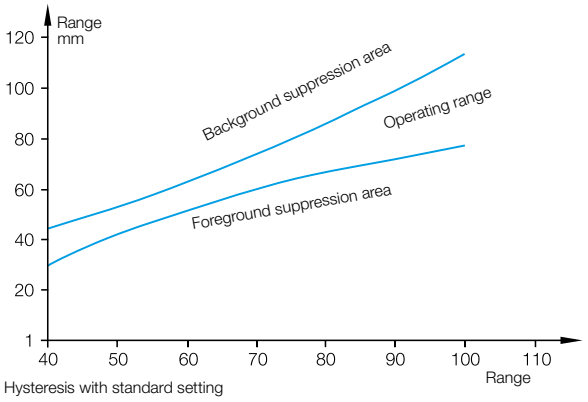

Hysteresis with standard setting

Diffuse sensor BOS 18KF-..-1PD-...

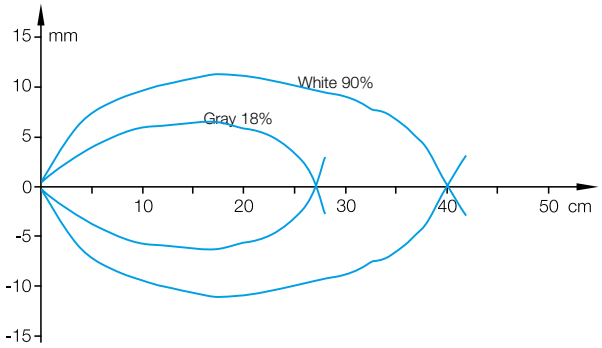

Detection range

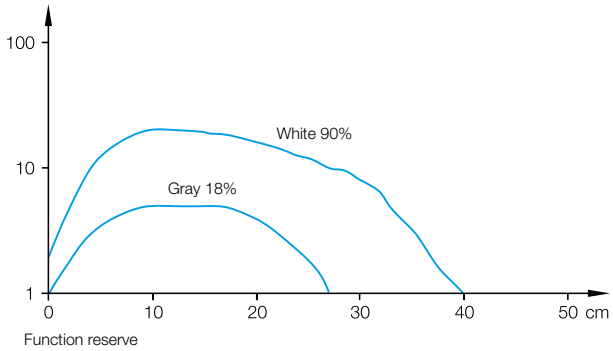

Function reserve

Diffuse sensor BOS 18KF-..-1PE-...

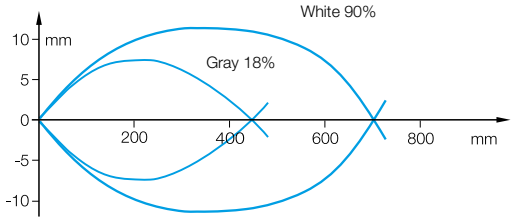

Detection range

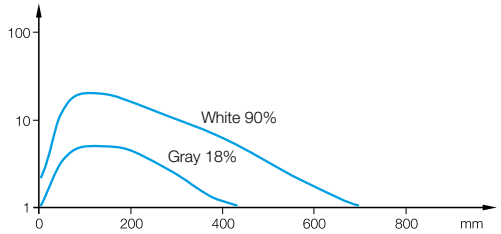

Function reserve

Diffuse sensor BOS 18KF-..-1LOC-...

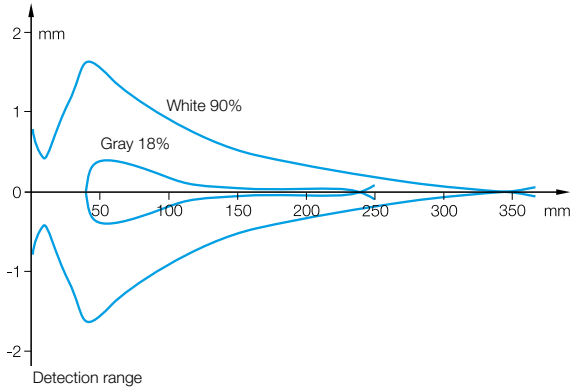

Detection range

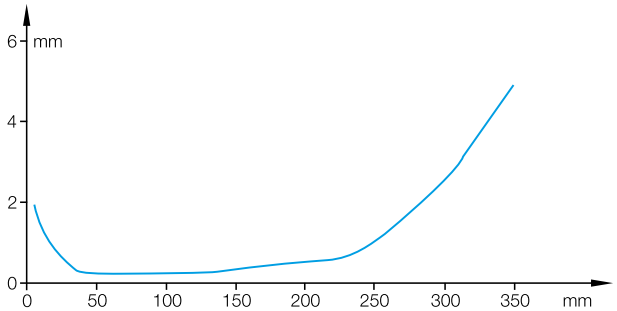

Resolution

Diffuse sensor BOS 18KW-..-1HA-...

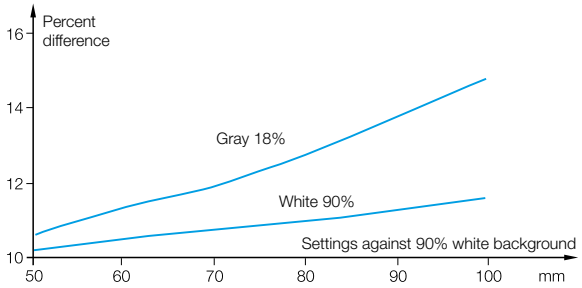

Tolerance with standard setting

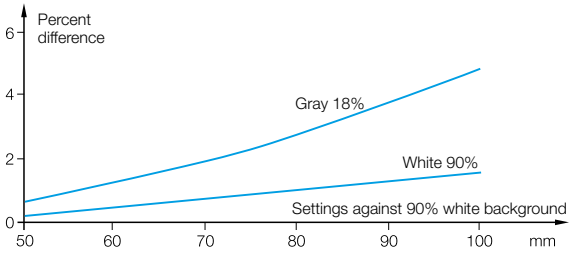

Tolerance with fine setting

Diffuse sensor BOS 18KW-..-1XA-...

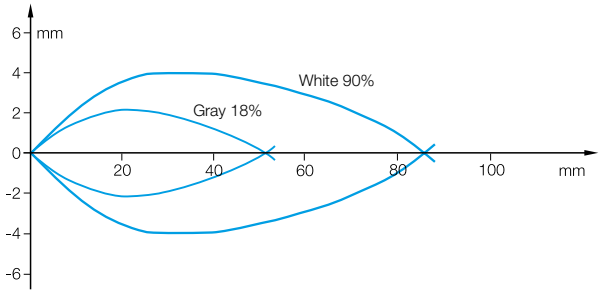

Detection range

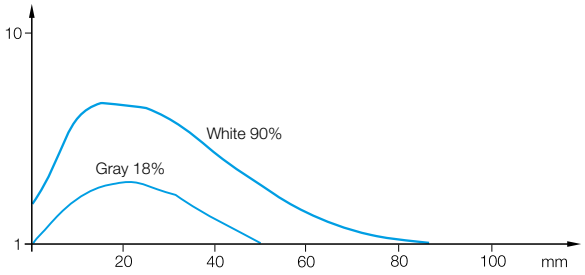

Function reserve

Diffuse sensor BOS 18KW-..-1PD-...

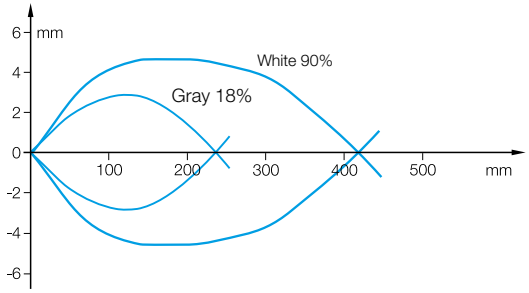

Detection range

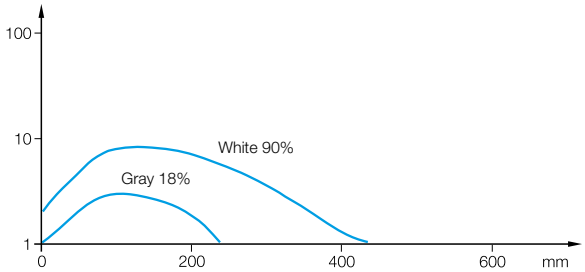

Function reserve

Diffuse sensor BOS 18KW-..-1LOB-...

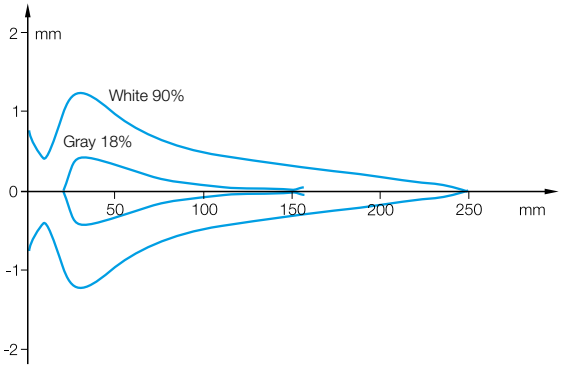

Detection range

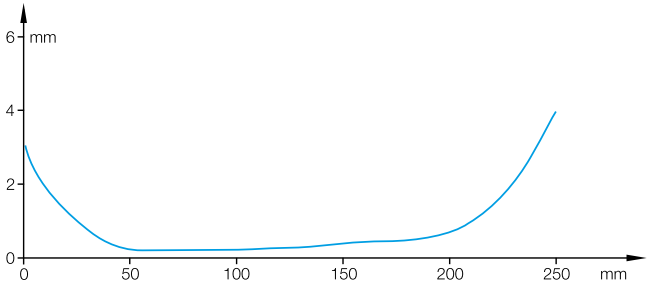

Resolution

Diffuse sensor BOS 30M-..-1PH-...

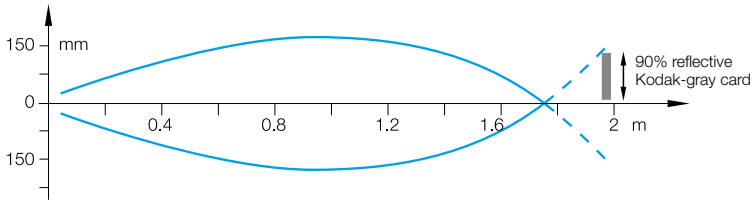

Sensing distance with side approach of Kodak-gray card.

PNP normally open			**BOS01H2** BOS 08E-PS-KF20-00,2-S49	
PNP normally open, IO-Link 1.1	**BOS0246** BOS 08E-PI-KH22-00,2-S49	**BOS0247** BOS 08E-PI-KH22-S49		
PNP normally open, PNP normally closed				
Series	08E	08E	08E	
Dimension	Ø 8 x 40 mm	Ø 8 x 40 mm	Ø 8 x 40 mm	
Supplementary output	—	—	—	
Principle of operation	Photoelectric sensor	Photoelectric sensor	Photoelectric sensor	
Principle of optical operation	Diffuse sensor, triangu-lation	Diffuse sensor, triangu-lation	Diffuse sensor, triangu-lation	
Special optical feature	Background suppression	Background suppression	Background suppression	
Beam characteristic	Divergent	Divergent	Divergent	
Light type	LED, red light	LED, red light	LED, red light	
Light spot size	Ø 2.5 mm Light exit	Ø 2.5 mm Light exit	Ø 2.5 mm Light exit	
Range	30 mm, adjustable	30 mm, adjustable	20 mm	
Connection	Cable with connector, M8x1-Male, 3-pin, 0.20 m, PUR	Connector, M8x1-Male, 3-pin	Cable with connector, M8x1-Male, 3-pin, 0.20 m, PUR	
Housing material	Stainless steel	Stainless steel	Stainless steel	
Material sensing surface	PMMA	PMMA	PMMA	
Operating voltage Ub	10...30 VDC	10...30 VDC	10...30 VDC	
Approval/Conformity	CE, EAC, cULus, WEEE, IO-Link	CE, EAC, cULus, WEEE, IO-Link	CE, cULus, EAC, WEEE	
Trademark	—	—	—	
Productview	Page 388	Page 388	Page 388	

BOS01H6 BOS 08E-PS-KF20-S49	**BOS01H0** BOS 08E-PS-KH22-00,2-S49	**BOS01H4** BOS 08E-PS-KH22-S49		
			BOS01UM BOS 12M-PA-RF10-S4	**BOS01ZT** BOS 12M-PA-RF11-S4
08E	08E	08E	12M	12M
Ø 8 x 40 mm	Ø 8 x 40 mm	Ø 8 x 40 mm	Ø 12 x 60 mm	Ø 12 x 60 mm
—	—	—	—	—
Photoelectric sensor	Photoelectric sensor	Photoelectric sensor	Photoelectric sensor	Photoelectric sensor
Diffuse sensor, triangulation	Diffuse sensor, triangulation	Diffuse sensor, triangulation	Diffuse sensor, triangulation	Diffuse sensor, triangulation
Background suppression	Background suppression	Background suppression	Fixed focus, Fixed background suppression	Fixed background suppression
Divergent	Divergent	Divergent	Focus, typical at 25 mm	Divergent
LED, red light	LED, red light	LED, red light	LED, red light	LED, red light
Ø 2.5 mm Light exit	Ø 2.5 mm Light exit	Ø 2.5 mm Light exit	Ø 2 mm at 25 mm	Ø 4 mm at 50 mm
20 mm	7...30 mm	7...30 mm	1...25 mm	0...50 mm
Connector, M8x1-Male, 3-pin	Cable with connector, M8x1-Male, 3-pin, 0.20 m, PUR	Connector, M8x1-Male, 3-pin	Connector, M12x1-Male, 4-pin	Connector, M12x1-Male, 4-pin
Stainless steel	Stainless steel	Stainless steel	Brass, nickel plated	Brass, nickel plated
PMMA	PMMA	PMMA	PMMA	PMMA
10...30 VDC	10...30 VDC	10...30 VDC	10...30 VDC	10...30 VDC
cULus, CE, EAC, WEEE	cULus, CE, EAC, WEEE	cULus, CE, EAC, WEEE	CE, cULus, EAC, WEEE	CE, cULus, EAC, WEEE
—	—	—	—	—
Page 388	Page 388	Page 388	Page 388	Page 388

PNP normally open			**BOS002H** BOS 18M-PS-LH22-S4	
PNP normally open, PNP normally closed	**BOS01ZU** BOS 12M-PA-RH12-S4	**BOS01C5** BOS 18M-PA-LH23-S4		
Series	12M	18M	18M	
Dimension	Ø 12 x 60 mm	Ø 18 x 75 mm	Ø 18 x 75 mm	
Supplementary output	—	—	—	
Principle of operation	Photoelectric sensor	Photoelectric sensor	Photoelectric sensor	
Principle of optical operation	Diffuse sensor, triangu-lation	Diffuse sensor, triangu-lation	Diffuse sensor, triangu-lation	
Special optical feature	Background suppression	Background suppression	Background suppression	
Beam characteristic	Divergent	Focus, typical at 100 mm	Focus, typical at 100 mm	
Light type	LED, red light	Laser red light	Laser red light	
Light spot size	Ø 6 mm at 100 mm	0.05 x 0.1 mm at focal point	0.05 x 0.1 mm at focal point	
Range	25...100 mm	30...150 mm	30...150 mm	
Connection	Connector, M12x1-Male, 4-pin	Connector, M12x1-Male, 4-pin	Connector, M12x1-Male, 4-pin	
Housing material	Brass, nickel plated	Brass, nickel plated	Brass, nickel plated	
Material sensing surface	PMMA	PMMA	PMMA	
Operating voltage Ub	10...30 VDC	10...30 VDC	10...30 VDC	
Approval/Conformity	CE, cULus, EAC, WEEE	CE, cULus, EAC, WEEE	CE, cULus, EAC, WEEE	
Trademark	—	—	—	
Productview	Page 389	Page 389	Page 389	

	BOS002K BOS 18M-PSV-LH22-S4	BOS010J BOS 18MR-PS-1HA-E5-C-S4			
			BOS0081 BOS 18MR-PA-1HA-S4-C	BOS014W BOS 18M-PA-RH22-S4	BOS01J4 BOS 18M-PA-RH23-S4
	18M	18MR	18MR	18M	18M
	Ø 18 x 75 mm	Ø 18 x 18 mm	20 x 82 x 28 mm	Ø 18 x 75 mm	Ø 18 x 75 mm
	Error output PNP	—	—	—	—
	Photoelectric sensor	Photoelectric sensor	Photoelectric sensor	Photoelectric sensor	Photoelectric sensor
	Diffuse sensor, triangu-lation	Diffuse sensor, triangu-lation	Diffuse sensor, triangu-lation	Diffuse sensor, triangu-lation	Diffuse sensor, triangu-lation
	Background suppression	Background suppression	Background suppression	Background suppression	Background suppression
	Focus, typical at 100 mm	Divergent	Divergent	Divergent	Divergent
	Laser red light	LED, red light	LED, red light	LED, red light	LED, red light
	0.05 x 0.1 mm at focal point	—	8 x 10 mm at 100 mm	27 x 27 mm at 300 mm	10 x 10 mm at 150 mm
	30...150 mm	10...120 mm	40...120 mm	30...300 mm	30...150 mm
	Connector, M12x1-Male, 4-pin	Connector, M12x1-Male, 4-pin	Connector, M12x1-Male, 4-pin	Connector, M12x1-Male, 4-pin	Connector, M12x1-Male, 4-pin
	Brass, nickel plated	Brass, Chrome-plated	Brass, nickel plated	Brass	Brass
	PMMA	Glass	Glass	Glass	Glass
	10...30 VDC	10...30 VDC	10...30 VDC	10...30 VDC	10...30 VDC
	CE, cULus, EAC, WEEE	CE, EAC, WEEE	CE, cULus, EAC, WEEE	cULus, CE, EAC, WEEE	CE, cULus, EAC, WEEE
	—	—	—	—	—
	Page 389	Page 389	Page 389	Page 389	Page 389

2 × PNP normally open/normally closed		BOS00LH BOS 18KW-PA-1HA-S4-C	BOS00JW BOS 18KF-PA-1N1R-S4-C	
PNP normally open	BOS0016 BOS 18E-PS-1N2M-S4-D			
Series	18E	18KW	18KF	
Dimension	Ø 18 x 72 mm	Ø 18 x 93.5 mm	Ø 18 x 71.5 mm	
Supplementary output	—	—	—	
Principle of operation	Photoelectric sensor	Photoelectric sensor	Photoelectric sensor	
Principle of optical operation	Diffuse sensor, triangulation	Diffuse sensor, triangulation	Diffuse sensor, triangulation	
Special optical feature	Fixed background suppression	Background suppression	Fixed background suppression	
Beam characteristic	Focus, typical at 16 mm	—	Focused	
Light type	LED, red light	LED, red light	LED, red light	
Light spot size	Ø 5 mm at 20 mm	Ø 10 mm at 100 mm	Ø 20 mm at 100 mm	
Range	0...40 mm	50...100 mm	5...100 mm	
Connection	Connector, M12x1-Male, 4-pin	Connector, M12x1-Male, 4-pin	Connector, M12x1-Male, 4-pin	
Housing material	Stainless steel (1.4571)	PBT	PBT	
Material sensing surface	Glass	PMMA	PMMA	
Operating voltage Ub	10...30 VDC	10...30 VDC	10...30 VDC	
Approval/Conformity	CE, WEEE, EAC	CE, cULus, EAC, WEEE	CE, cULus, EAC, WEEE	
Trademark	—	Global	Global	
Productview	Page 389	Page 389	Page 389	

	BOS00JM BOS 18KF-PA-1HA-S4-C				
		BOS021C BOS R020K-PS-RF10-00,2-S49	BOS020M BOS R020K-PS-RF11-00,2-S49	BOS020N BOS R020K-PS-RF11-00,2-S75	BOS020K BOS R020K-PS-RF11-02
	18KF	R020K	R020K	R020K	R020K
	Ø 18 x 96 mm	7.7 x 26.8 x 13.5 mm	7.7 x 26.8 x 13.5 mm	7.7 x 26.8 x 13.5 mm	7.7 x 26.8 x 13.5 mm
	—	—	—	—	—
	Photoelectric sensor	Photoelectric sensor	Photoelectric sensor	Photoelectric sensor	Photoelectric sensor
	Diffuse sensor, triangu-lation	Diffuse sensor, HGA fixed	Diffuse sensor, HGA fixed	Diffuse sensor, HGA fixed	Diffuse sensor, HGA fixed
	Background suppression	Background suppression	Background suppression	Background suppression	Background suppression
	—	Focus, typical at 7.5 mm	Focus, typical at 15 mm	Focus, typical at 15 mm	Focus, typical at 15 mm
	LED, red light	LED, red light	LED, red light	LED, red light	LED, red light
	Ø 8 mm at 100 mm	Ø 2 mm at 8 mm	Ø 3 mm at 15 mm	Ø 3 mm at 15 mm	Ø 3 mm at 15 mm
	50...100 mm	1...15 mm	1...30 mm	1...30 mm	1...30 mm
	Connector, M12x1-Male, 4-pin	Cable with connector, M8x1-Male, 3-pin, 0.20 m, PVC	Cable with connector, M8x1-Male, 3-pin, 0.20 m, PVC	Cable with connector, M8x1-Male, 4-pin, 0.20 m, PVC	Cable, 2.00 m, PVC
	PBT	ABS	ABS	ABS	ABS
	PMMA	PMMA	PMMA	PMMA	PMMA
	10...30 VDC	10...30 VDC	10...30 VDC	10...30 VDC	10...30 VDC
	CE, cULus, EAC, WEEE	CE, cULus, EAC, WEEE	CE, cULus, EAC, WEEE	CE, cULus, EAC, WEEE	CE, cULus, EAC, WEEE
	Global	—	—	—	—
	Page 390	Page 390	Page 390	Page 390	Page 390

PNP normally open	BOS0217 BOS R020K-PS-RF12-00,2-S49	BOS0234 BOS R020K-PS-RH12-00,2-S75	BOS022C BOS R020K-PS-RH12-02
PNP normally open/normally closed			
Series	R020K	R020K	R020K
Dimension	7.7 x 26.8 x 13.5 mm	7.7 x 32.5 x 13.5 mm	7.7 x 32.5 x 13.5 mm
Supplementary output	—	—	—
Principle of operation	Photoelectric sensor	Photoelectric sensor	Photoelectric sensor
Principle of optical operation	Diffuse sensor, HGA fixed	Diffuse sensor, triangu-lation	Diffuse sensor, triangu-lation
Special optical feature	Background suppression	Background suppression	Background suppression
Beam characteristic	Focus, typical at 15 mm	Focus, typical at 15 mm	Focus, typical at 15 mm
Light type	LED, red light	LED, red light	LED, red light
Light spot size	Ø 4.5 mm at 40 mm	Ø 4.4 mm at 80 mm	Ø 4.4 mm at 80 mm
Range	1...60 mm	1...150 mm	1...150 mm
Connection	Cable with connector, M8x1-Male, 3-pin, 0.20 m, PVC	Cable with connector, M8x1-Male, 4-pin, 0.20 m, PVC	Cable, 2.00 m, PVC
Housing material	ABS	ABS	ABS
Material sensing surface	PMMA	PMMA	PMMA
Operating voltage Ub	10...30 VDC	10...30 VDC	10...30 VDC
Approval/Conformity	CE, cULus, EAC, WEEE	CE, cULus, EAC, WEEE	CE, cULus, EAC, WEEE
Trademark	—	—	—
Productview	Page 390	Page 390	Page 390

	BOS021U BOS R01E-PS-KF20-00,2-S49	BOS021W BOS R01E-PS-KF20-02	BOS022N BOS R01E-PS-KF21-02	BOS0265 BOS R01E-UI-KH22-00,2-S49	
					BOS01JK BOS 5K-PU-LH12-S75
	R01E	R01E	R01E	R01E	5K
	20 x 32 x 9 mm	20 x 32 x 9 mm	20 x 32 x 9 mm	20 x 32 x 9 mm	10.8 x 43.5 x 19.5 mm
	—	—	—	—	—
	Photoelectric sensor	Photoelectric sensor	Photoelectric sensor	Photoelectric sensor	Photoelectric sensor
	Diffuse sensor, triangulation	Diffuse sensor, triangulation	Diffuse sensor, triangulation	Diffuse sensor, triangulation	Diffuse sensor, triangulation
	Fixed background suppression	Fixed background suppression	Fixed background suppression	Background suppression	Background suppression
	Divergent	Divergent	Divergent	Divergent	Focus, typical at 260 mm
	LED, red light	LED, red light	LED, red light	LED, red light	Laser red light
	Ø 3.0 mm Light exit	Ø 3.0 mm Light exit	Ø 3.0 mm Light exit	Ø 3.0 mm Light exit	0.2 x 0.3 mm at focal point
	100 mm	100 mm	50 mm	1...100 mm	20...300 mm
	Cable with connector, M8x1-Male, 3-pin, 0.20 m, PUR	Cable, 2.00 m, PUR	Cable, 2.00 m, PUR	Cable with connector, M8x1-Male, 3-pin, 0.20 m, PUR	Connector, M8x1-Male, 4-pin
	Stainless steel (1.4404)	Stainless steel (1.4404)	Stainless steel (1.4404)	Stainless steel (1.4404)	PC PBT
	PA	PA	PA	PA	PMMA
	10...30 VDC	10...30 VDC	10...30 VDC	10...30 VDC	10...30 VDC
	cULus, CE, Ecolab, EAC, WEEE	cULus, CE, Ecolab, EAC, WEEE	cULus, CE, Ecolab, EAC, WEEE	cULus, CE, Ecolab, EAC, IO-Link, WEEE	CE, cULus, CDRH, EAC, WEEE
	—	—	—	—	Global
	Page 390	Page 390	Page 390	Page 390	Page 391

PNP normally open		**BOS015U** BOS 5K-PS-RH12-S49	**BOS012A** BOS 5K-PS-RH12-S75	
PNP normally open, PNP normally closed				
PNP normally open/normally closed				
NPN normally open	**BOS011E** BOS 5K-NS-RH12-02			
Series	5K	5K	5K	
Dimension	10.8 x 32.7 x 19.5 mm	10.8 x 43.2 x 19.5 mm	10.8 x 43.2 x 19.5 mm	
Supplementary output	—	—	—	
Principle of operation	Photoelectric sensor	Photoelectric sensor	Photoelectric sensor	
Principle of optical operation	Diffuse sensor, triangu-lation	Diffuse sensor, triangu-lation	Diffuse sensor, triangu-lation	
Special optical feature	Background suppression	Background suppression	Background suppression	
Beam characteristic	Focus, typical at 60 mm	Focus, typical at 60 mm	Focus, typical at 60 mm	
Light type	LED, red light	LED, red light	LED, red light	
Light spot size	Ø 5 mm at 60 mm	Ø 5 mm at 60 mm	Ø 5 mm at 60 mm	
Range	40...200 mm	40...200 mm	40...200 mm	
Connection	Cable, 2.00 m, PVC	Connector, M8x1-Male, 3-pin	Connector, M8x1-Male, 4-pin	
Housing material	PC PBT	PC PBT	PC PBT	
Material sensing surface	PMMA	PMMA	PMMA	
Operating voltage Ub	10...30 VDC	10...30 VDC	10...30 VDC	
Approval/Conformity	cULus, CE, WEEE, EAC	cULus, CE, WEEE, EAC	cULus, CE, WEEE, EAC	
Trademark	Global	Global	Global	
Productview	Page 391	Page 391	Page 391	

					BOS01Z9 BOS 21M-PA-LH23-S4
	BOS01LE BOS 6K-PU-LH10-S75	**BOS01KW** BOS 6K-PU-RH10-S49	**BOS01KY** BOS 6K-PU-RH10-S75	**BOS01L3** BOS 6K-PU-RH11-S75	
	6K	6K	6K	6K	21M
	12 x 41.5 x 21.6 mm	12 x 41.5 x 21.6 mm	12 x 41.5 x 21.6 mm	12 x 41.5 x 21.6 mm	15 x 51 x 42.5 mm
	–	–	–	–	–
	Photoelectric sensor	Photoelectric sensor	Photoelectric sensor	Photoelectric sensor	Photoelectric sensor
	Diffuse sensor, triangu-lation	Diffuse sensor, triangu-lation	Diffuse sensor, triangu-lation	Diffuse sensor, triangu-lation	Diffuse sensor, triangu-lation
	Background suppression	Background suppression	Background suppression	Background suppression	Background suppression
	Focused	Focus, typical at 50 mm	Focus, typical at 50 mm	Focus, typical at 60 mm	Focus, typical at 400 mm
	Laser red light	LED, red light	LED, red light	LED, red light	Laser red light
	Ø 1.2 mm at 120 mm	5 x 5 mm at focal point	5 x 5 mm at focal point	8 x 8 mm at focal point	Ø 3 mm at 200 mm
	4...120 mm	1...200 mm	1...200 mm	3...400 mm	1...250 mm
	Connector, M8x1-Male, 4-pin	Connector, M8x1-Male, 3-pin	Connector, M8x1-Male, 4-pin	Connector, M8x1-Male, 4-pin	Connector, M12x1-Male, 4-pin
	ABS	ABS	ABS	ABS	Zinc, Die casting, Powder coated Aluminum
	PMMA	PMMA	PMMA	PMMA	Glass
	10...30 VDC	10...30 VDC	10...30 VDC	10...30 VDC	10...30 VDC
	CE, cULus, EAC, WEEE	CE, cULus, EAC, WEEE	cULus, CE, EAC, WEEE	cULus, CE, EAC, WEEE	CE, cULus, CDRH, EAC, WEEE
	–	–	–	–	–
	Page 391	Page 391	Page 391	Page 391	Page 391

2 × PNP/NPN/push-pull, normally open/normally closed, IO-Link 1.1	**BOS026K** BOS 21M-UUI-LH31-S4			
PNP normally open, PNP normally closed		**BOS01Z8** BOS 21M-PA-RH22-S4		
PNP normally open/normally closed			**BOS0036** BOS 21M-PUS-RV13-S4	
normally open/normally closed				
Series	21M	21M	21M	
Dimension	15 x 51 x 42.5 mm	15 x 51 x 42.5 mm	15 x 50 x 42.5 mm	
Supplementary output	—	—	—	
Principle of operation	Photoelectric sensor	Photoelectric sensor	Photoelectric sensor	
Principle of optical operation	Diffuse sensor, triangulation	Diffuse sensor, triangulation	Diffuse sensor, triangulation	
Special optical feature	Background suppression, CCD technology	Background suppression	Background suppression, Foreground suppression	
Beam characteristic	Focus, typical at 400 mm	Focus, typical at 200 mm	—	
Light type	Laser red light	LED, red light	LED, red light	
Light spot size	0.5 x 1.5 mm at 200 mm	6 x 6 mm at 200 mm	—	
Range	30...200 mm	1...400 mm	70...200 mm	
Connection	Connector, M12x1-Male, 4-pin	Connector, M12x1-Male, 4-pin	Connector, M12x1-Male, 4-pin	
Housing material	Zinc, Die casting, Painted Aluminum, Glass, PC	Zinc, Die casting, Powder coated Aluminum	Zinc, Die casting, Powder coated Aluminum	
Material sensing surface	Glass, anti-glare	Glass	PMMA	
Operating voltage Ub	10...30 VDC	10...30 VDC	10...30 VDC	
Approval/Conformity	CE, EAC, cULus, WEEE	CE, cULus, EAC, WEEE	CE, cULus, EAC, WEEE	
Trademark	—	—	—	
Productview	Page 391	Page 391	Page 392	

	BOS0285 BOS R254K-UUI-LH10-S4				
		BOS01FR BOS 23K-PA-LH10-S4			**BOS01FL** BOS 23K-PA-RH10-S4
		BOS017C BOS 23K-PU-LH10-S4	**BOS017H** BOS 23K-PU-LH20-S4		**BOS0178** BOS 23K-PU-RH10-S4
				BOS01UW BOS 23K-UU-LH11-S92	
	R254K	23K	23K	23K	23K
	20.4 x 60.3 x 49.5 mm	23 x 51 x 52.4 mm	23 x 51 x 52.4 mm	23 x 51 x 52.4 mm	23 x 51 x 52.4 mm
	–	–	–	–	–
	Photoelectric sensor	Photoelectric sensor	Photoelectric sensor	Photoelectric sensor	Photoelectric sensor
	Diffuse sensor, triangu-lation	Diffuse sensor, triangu-lation	Diffuse sensor, triangu-lation	Light time-of-flight	Diffuse sensor, triangu-lation
	Background suppression, CCD technology	Background suppression	Background suppression	Background suppression	Background suppression
	Focus, typical at 400 mm	Collimated	Collimated	Divergent	Focus, typical at 500 mm
	Laser red light	Laser red light	Laser red light	Laser red light	LED, red light
	0.4 x 1.3 mm at 250 mm	2.2 x 2.2 mm at 800 mm	2.5 x 3.5 mm at 800 mm	Ø 7 mm at 5 m	15 x 15 mm at focal point
	30...250 mm	5...800 mm	5...800 mm	0...5 m	3...800 mm
	Connector, M12x1-Male, 4-pin	Connector, M12x1-Male, 4-pin	Connector, M12x1-Male, 4-pin	Connector, M12x1, 5-pin	Connector, M12x1-Male, 4-pin
	PA 12 PA PACM 12	PC ABS	PC ABS	PC ABS	PC ABS
	PA PACM 12	PMMA	PMMA	PMMA	PMMA
	10...30 VDC	12...30 VDC	12...30 VDC	18...30 VDC	10...30 VDC
	CE, EAC	CE, Ecolab, cULus, EAC, WEEE	Ecolab, CE, cULus, EAC, WEEE	CE, Ecolab, cULus, EAC, WEEE	CE, Ecolab, cULus, EAC, WEEE
	–	–	–	–	–
	Page 388	Page 392	Page 392	Page 392	Page 392

PNP normally open			
PNP normally open, PNP normally closed	**BOS008A** BOS 26K-PA-1IE-S4-C	**BOS008E** BOS 26K-PA-1LHB-S4-C	**BOS008F** BOS 26K-PA-1LHC-S4-C
Relay normally open/normally closed			
Series	26K	26K	26K
Dimension	17 x 50 x 50 mm	17 x 50 x 50 mm	17 x 50 x 50 mm
Supplementary output	—	—	—
Principle of operation	Photoelectric sensor	Photoelectric sensor	Photoelectric sensor
Principle of optical operation	Diffuse sensor, triangu-lation	Diffuse sensor, triangu-lation	Diffuse sensor, triangu-lation
Special optical feature	Background suppression	Background suppression	Background suppression
Beam characteristic	—	Focus, typical at 80 mm	Collimated
Light type	Infrared	Laser red light	Laser red light
Light spot size	20 x 20 mm at 400 mm	Ø 0.1 mm at focal point	3 x 1 mm at 300 mm
Range	150...600 mm	30...150 mm	50...300 mm
Connection	Connector, M12x1-Male, 4-pin	Connector, M12x1-Male, 4-pin	Connector, M12x1-Male, 4-pin
Housing material	ABS	ABS	ABS
Material sensing surface	PMMA	PMMA	PMMA
Operating voltage Ub	10...30 VDC	10...30 VDC	10...30 VDC
Approval/Conformity	cULus, CE, WEEE, EAC	cULus, CE, EAC, WEEE	cULus, CE, EAC, WEEE
Trademark	—	—	—
Productview	Page 392	Page 392	Page 392

		BOS018N BOS 50K-PS-RH12-S4	**BOS0156** BOS 50K-PSV-RH12-S4		
	BOS0089 BOS 26K-PA-1HC-S4-C	**BOS018P** BOS 50K-PA-RH12-S4			
				BOS01K1 BOS 64K-AA-IH12-TG	
	26K	50K	50K	64K	
	17 x 50 x 50 mm	28.5 x 80.5 x 62 mm	28.5 x 80.5 x 62 mm	25 x 69.7 x 100.4 mm	
	—	—	Error output PNP	—	
	Photoelectric sensor	Photoelectric sensor	Photoelectric sensor	Photoelectric sensor	
	Diffuse sensor, triangu-lation	Diffuse sensor, triangu-lation	Diffuse sensor, triangu-lation	Diffuse sensor, triangu-lation	
	Background suppression	Background suppression	Background suppression	Background suppression	
	—	Divergent	Divergent	Divergent	
	LED, red light	LED, red light	LED, red light	Infrared	
	Ø 8 mm at 200 mm	60 x 60 mm at Sr	60 x 60 mm at Sr	—	
	30...300 mm	200...2000 mm	200...2000 mm	200...2000 mm	
	Connector, M12x1-Male, 4-pin	Connector, M12x1-Male, 4-pin	Connector, M12x1-Male, 4-pin	Screw terminals	
	ABS	PC ABS	PC ABS	PBT, GF30	
	PMMA	Glass	Glass	PC	
	10...30 VDC	10...30 VDC	10...30 VDC	24...60 VDC/24...240 VAC	
	cULus, CE, EAC, WEEE	CE, cULus, EAC, WEEE	CE, cULus, EAC, WEEE	cULus, CE, EAC, WEEE	
	—	—	—	—	
	Page 392	Page 392	Page 392	Page 392	

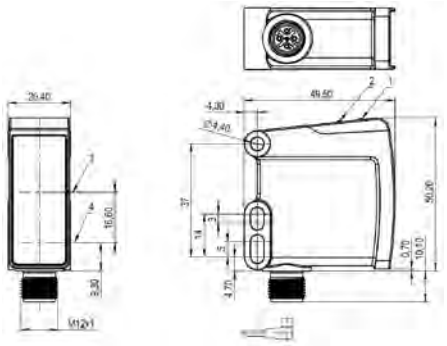

1) LED 1, 2) LED 2, 3) Optical axis receiver, 4) Optical axis emitter

BOS0285

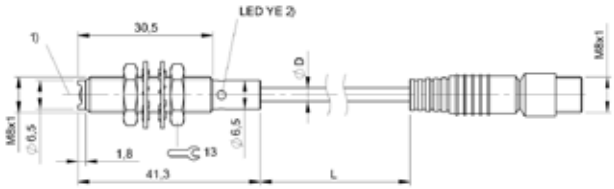

1) Optical axis, 2) Output function

BOS0246

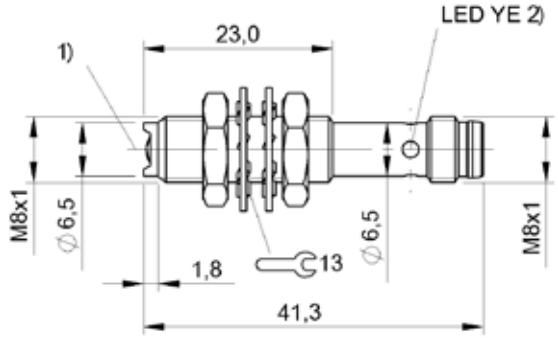

1) Optical axis, 2) Output function

BOS0247, BOS01H6

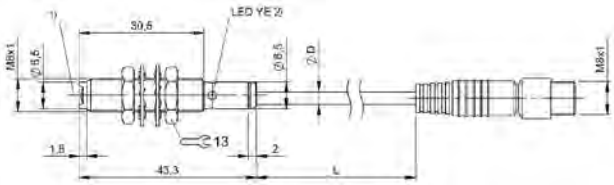

1) Optical axis, 2) Output function

BOS01H2

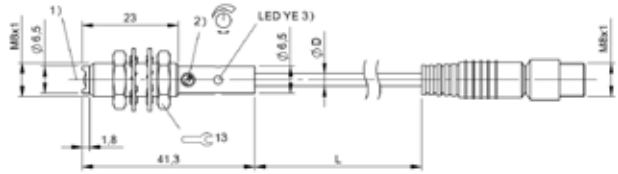

1) Optical axis, 2) Sn, 3) Output function

BOS01H0

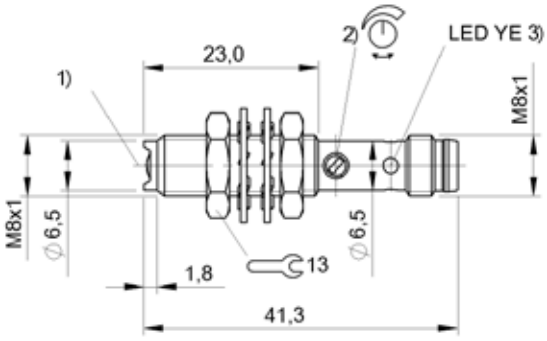

1) Optical axis, 2) Sn, 3) Output function

BOS01H4

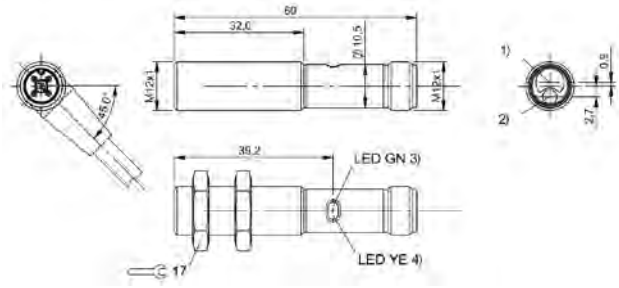

1) Optical axis receiver, 2) Optical axis emitter, 3) Operating voltage/Error, 4) Light reception/limit area

BOS01UM

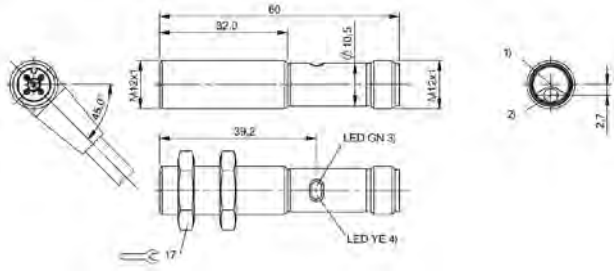

1) Optical axis receiver, 2) Optical axis emitter, 3) Operating voltage, 4) Light reception/limit area

BOS01ZT

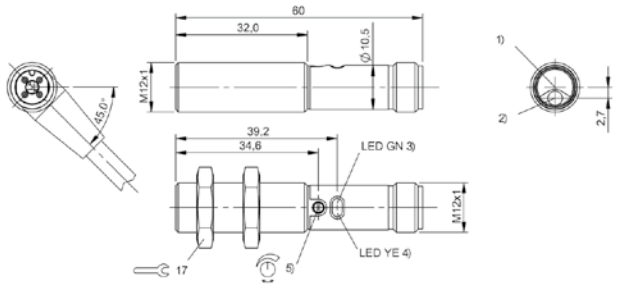

1) Optical axis receiver, 2) Optical axis emitter, 3) Operating voltage, 4) Light reception/limit area, 5) Sn

BOS01ZU

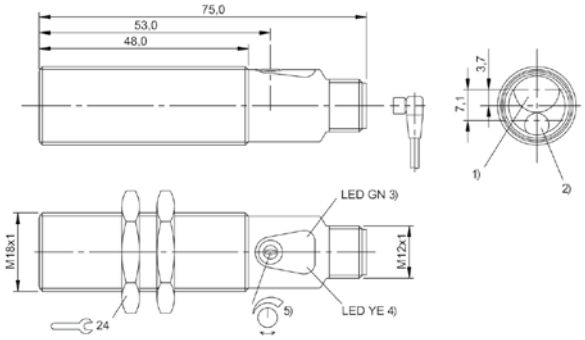

1) Optical axis receiver, 2) Optical axis emitter, 3) Power/short-circuit, 4) Output function/Error, 5) Sn

BOS01C5, BOS002H, BOS002K

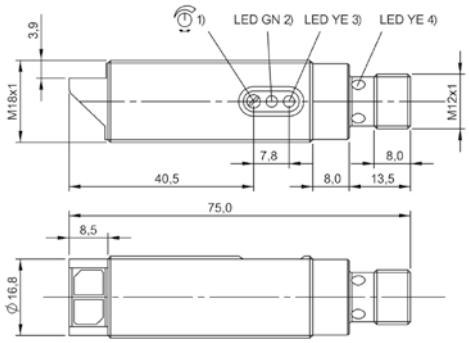

1) Sn, 2) Stability, 3) Output function

BOS010J

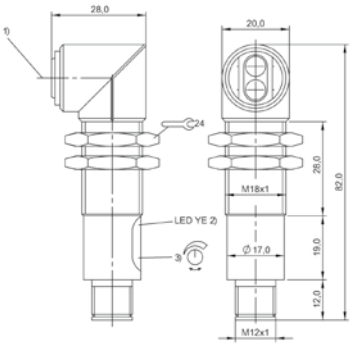

1) Optical axis, 2) Sn, 3) Output function

BOS0081

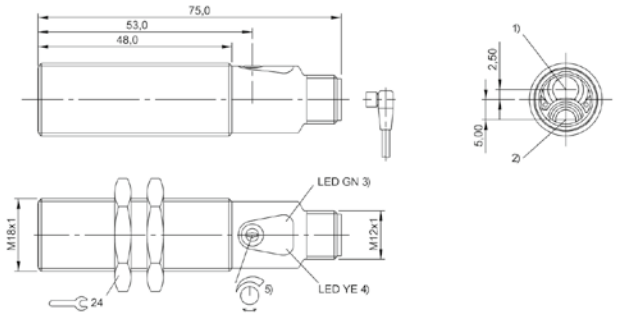

1) Optical axis receiver, 2) Optical axis emitter, 3) Power/short-circuit, 4) Output function/Error, 5) Sn

BOS014W, BOS01J4

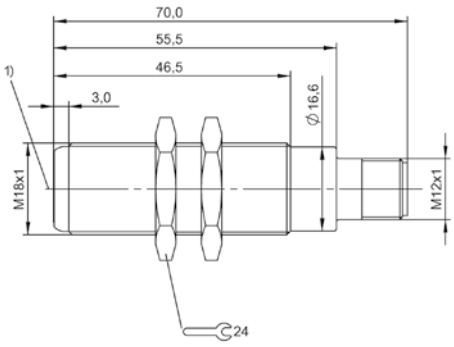

1) Optical axis

BOS0016

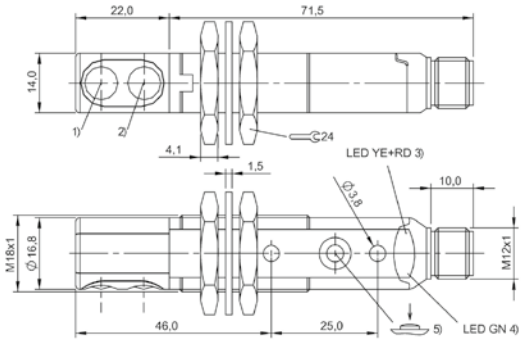

1) Optical axis emitter, 2) Optical axis receiver, 3) Output function, 4) stability/error, 5) Sn

BOS00LH

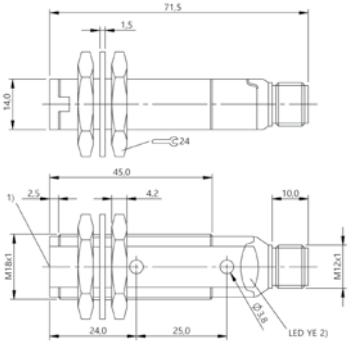

1) Optical axis, 2) Output function

BOS00JW

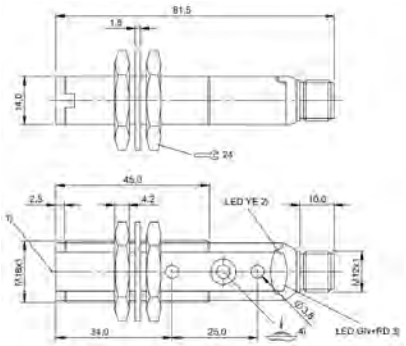

1) Optical axis, 2) Output function, 3) stability/error, 4) Sn

BOS00JM

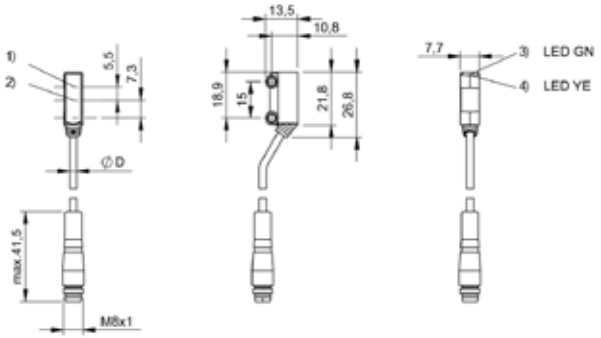

1) Optical axis receiver, 2) Optical axis emitter, 3) Operating voltage, 4) Light reception

BOS021C, BOS020M, BOS020N

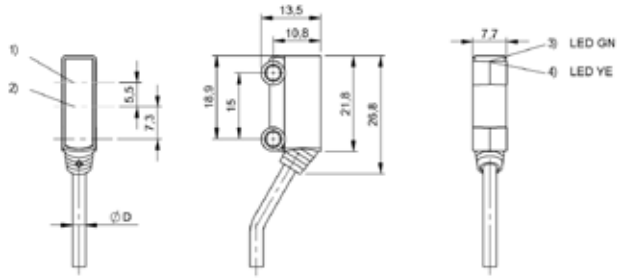

1) Optical axis receiver, 2) Optical axis emitter, 3) Operating voltage, 4) Light reception

BOS020K

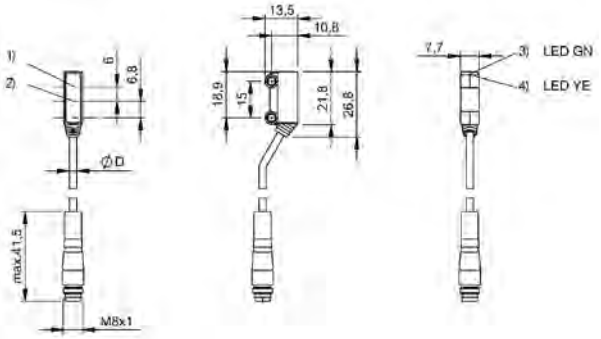

1) Optical axis receiver, 2) Optical axis emitter, 3) Operating voltage, 4) Light reception

BOS0217

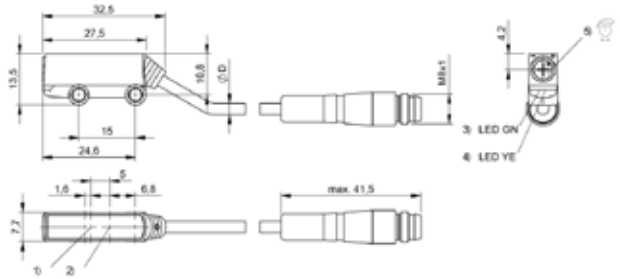

1) Optical axis receiver, 2) Optical axis emitter, 3) Operating voltage, 4) Light reception, 5) Sn

BOS0234

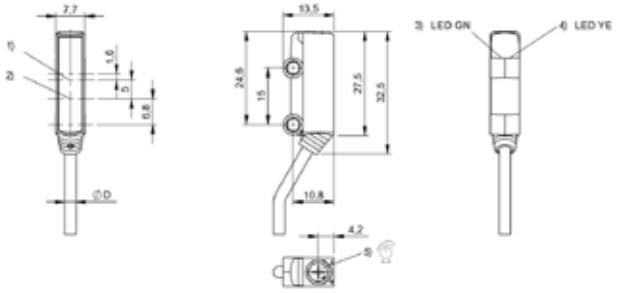

1) Optical axis receiver, 2) Optical axis emitter, 3) Operating voltage, 4) Light reception, 5) Sn

BOS022C

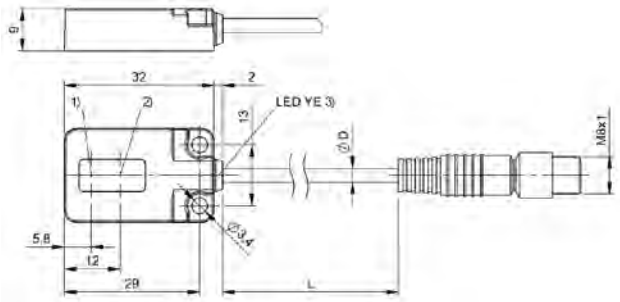

1) Optical axis emitter, 2) Optical axis receiver, 3) Output function

BOS021U, BOS0265

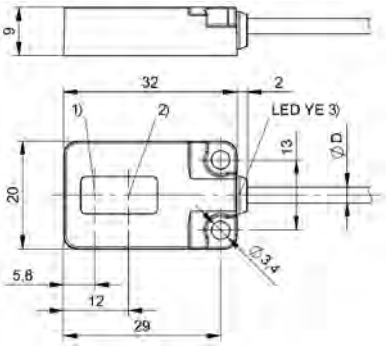

1) Optical axis emitter, 2) Optical axis receiver, 3) Output function

BOS021W, BOS022N

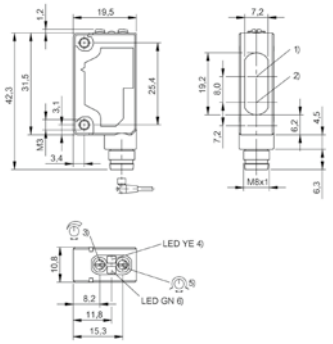

1) Optical axis receiver, 2) Optical axis emitter, 3) Sn, 4) Output function, 5) Light-on/dark-on, 6) stability

BOS01JK

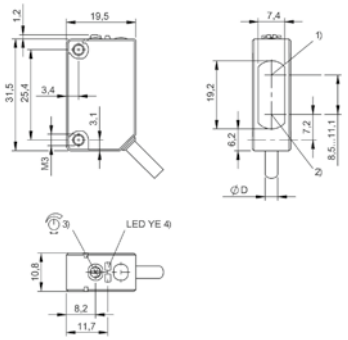

1) Optical axis receiver, 2) Optical axis emitter, 3) Sn, 4) Output function

BOS011E

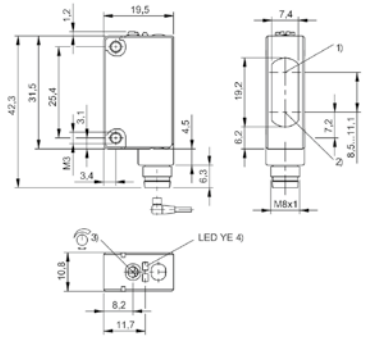

1) Optical axis receiver, 2) Optical axis emitter, 3) Sn, 4) Output function

BOS015U, BOS012A

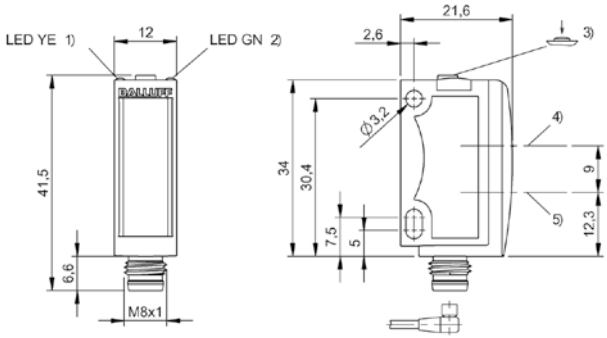

1) Output function, 2) Operating voltage, 3) Sn, light/dark, 4) Optical axis receiver, 5) Optical axis emitter

BOS01LE

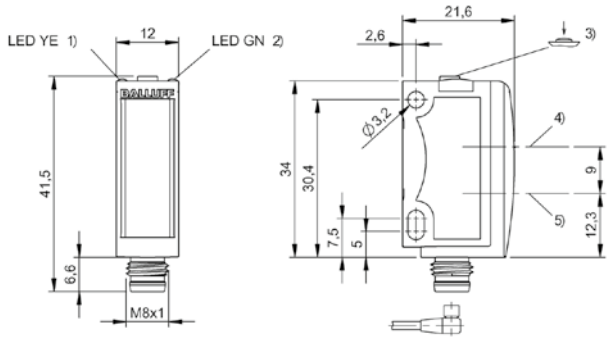

1) Output function, 2) Operating voltage, 3) Sn, light/dark, 4) Optical axis receiver, 5) Optical axis emitter

BOS01KW, BOS01KY

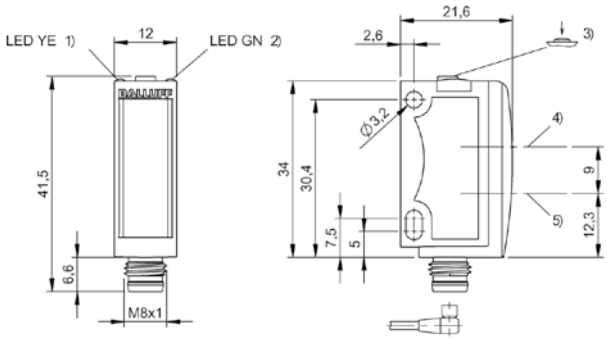

1) Output function, 2) Operating voltage, 3) Sn, light/dark, 4) Optical axis receiver, 5) Optical axis emitter

BOS01L3

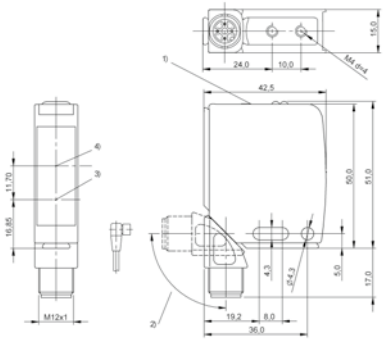

1) Display and control panel, 2) rotatable 270°, 3) Optical axis emitter, 4) Optical axis receiver

BOS01Z8, BOS01Z9

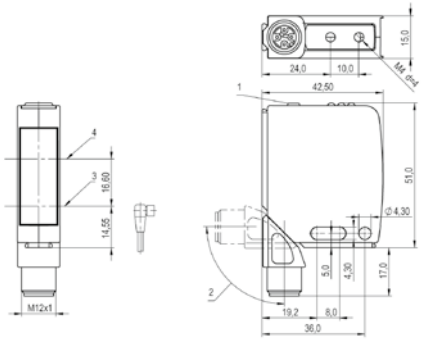

1) Display and control panel, 2) rotatable 270°, 3) Optical axis emitter, 4) Optical axis receiver

BOS026K

Do you need more details? Our Product Finder at www.balluff.com provides you with product-specific information, including technical drawings, data sheets, user guides and more for each individual product. All items are available for download.

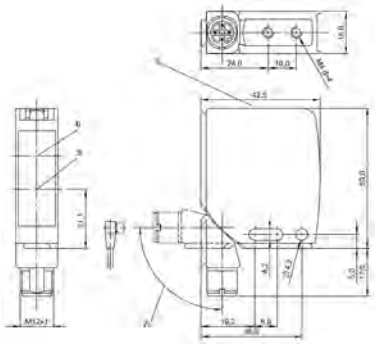

1) Display and control panel, 2) rotatable 270°, 3) Optical axis emitter, 4) Optical axis receiver

BOS0036

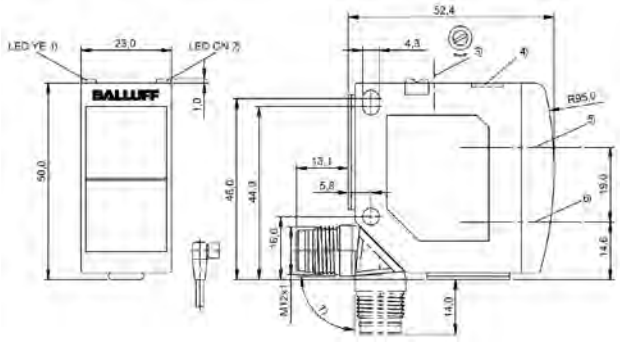

1) Output function/Error, 2) Operating voltage, 3) Sn, 4) Bar display for switching distance, 5) Optical axis receiver, 6) Optical axis emitter, 7) rotatable 270°

BOS01FR, BOS017C, BOS017H, BOS01FL, BOS0178

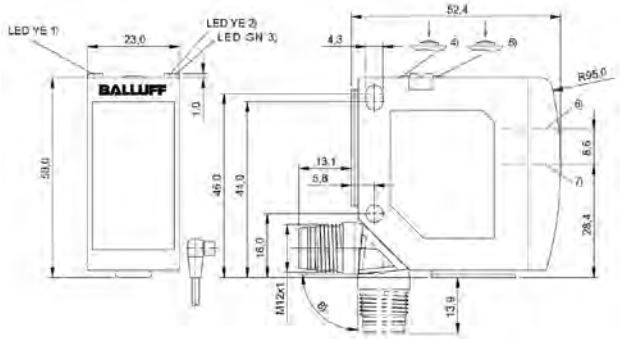

1) Output function Q1, 2) Output function Q2, 3) Operating voltage, 4) Setting Q1, 5) Setting Q2, 6) Optical axis emitter, 7) Optical axis receiver, 8) rotatable 270°

BOS01UW

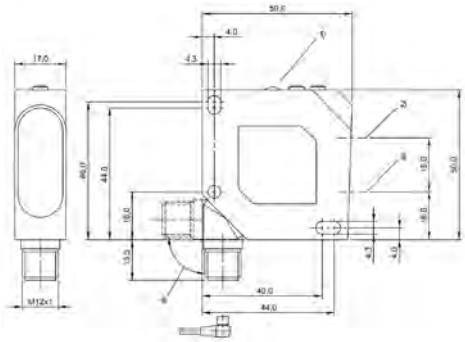

1) Display and control panel, 2) Optical axis receiver, 3) Optical axis emitter, 4) rotatable 270°

BOS008A, BOS008E, BOS008F, BOS0089

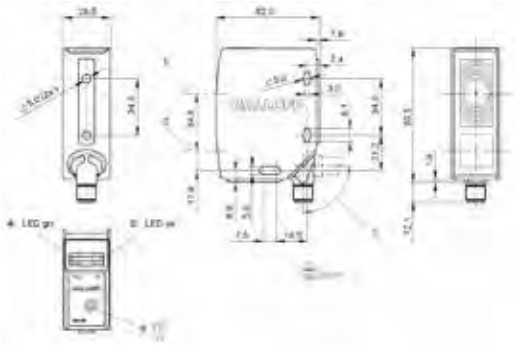

1) Optical axis receiver, 2) Optical axis emitter, 3) rotatable 270°, 4) Power/short-circuit, 5) Output function/Error, 6) Sn

BOS018P, BOS018N, BOS0156

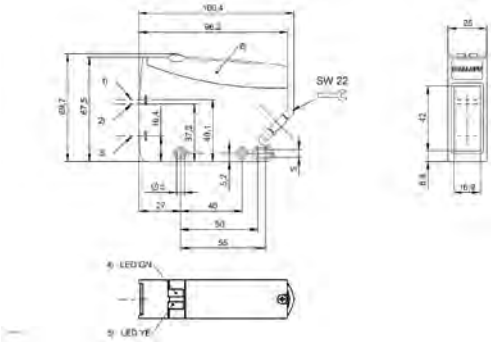

1) Opt. axis receiver max., 2) Opt. axis receiver min., 3) Optical axis emitter, 4) stability, 5) Output function, 6) Removable cover

BOS01K1

BOS01FL, BOS0178

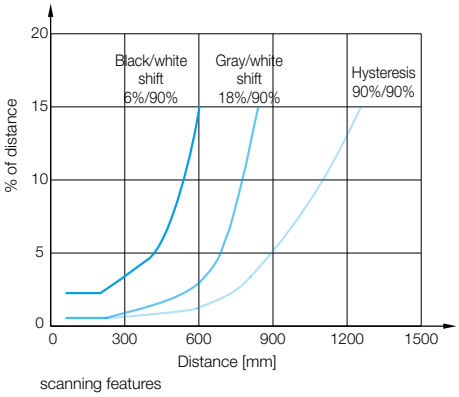

scanning features

Diffuse sensor with background suppression BOS 5K-_ _-RH12-_ _

Light spot diameter

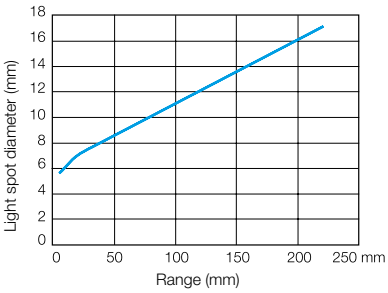

Characteristic response curve (background suppression 100 mm)

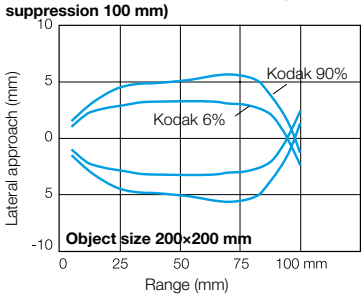

Range vs. hysteresis

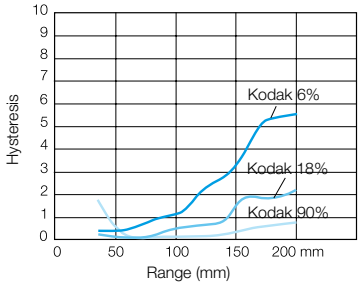

Diffuse sensor with background suppression BOS 18M-...LH Gray value shift

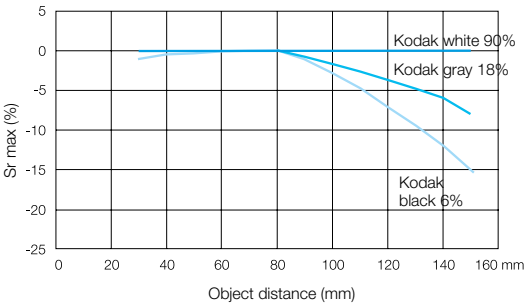

Diffuse sensor with background suppression BOS 18M-...LH Light spot diameter at distance

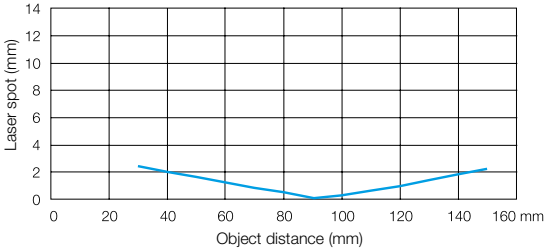

Diffuse sensor with background suppression BOS 18M-...LH Turn-on point for lateral approach

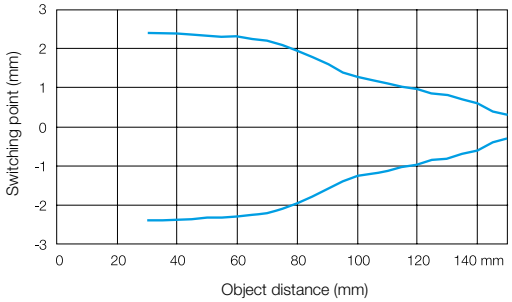

Diffuse sensor with background suppression BOS 18M-...LH Smallest detectable part

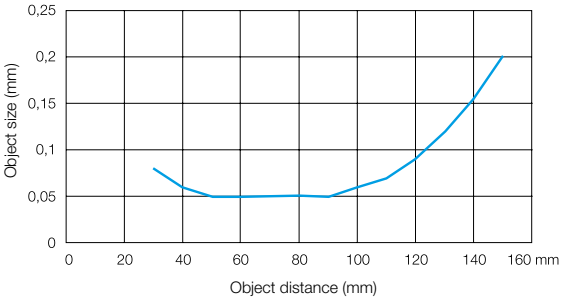

Do you need more details? Our Product Finder at www.balluff.com provides you with product-specific information, including technical drawings, data sheets, user guides and more for each individual product. All items are available for download.

PNP normally open	**BOS01RK** BOS 08E-PS-PR20-S49	**BOS01RL** BOS 08E-PS-PR20-00,2-S49	**BOS01TT** BOS 12M-PS-PR10-S4	
PNP normally closed	**BOS01RM** BOS 08E-PO-PR20-S49			
PNP normally open, PNP normally closed				
Series	08E	08E	12M	
Dimension	Ø 8 x 40 mm	Ø 8 x 40 mm	Ø 12 x 60 mm	
Input function	—	—	—	
Principle of operation	Photoelectric sensor	Photoelectric sensor	Photoelectric sensor	
Principle of optical operation	Retroreflective sensor	Retroreflective sensor	Retroreflective sensor	
Special optical feature	—	—	—	
Beam characteristic	Divergent	Divergent	Divergent	
Light type	LED, red light	LED, red light	LED, red light	
Light spot size	Ø 3.0 mm Light exit	Ø 3.0 mm Light exit	Ø 160 mm at 3 m	
Range	0...1 m	0...1 m	0...3 m	
Connection	Connector, M8x1-Male, 3-pin	Cable with connector, 0.20 m, PUR	Connector, M12x1-Male, 4-pin	
Housing material	Stainless steel	Stainless steel	Brass, nickel plated	
Material sensing surface	PMMA	PMMA	PMMA	
Operating voltage Ub	10...30 VDC	10...30 VDC	10...30 VDC	
Approval/Conformity	CE, cULus, EAC, WEEE	CE, cULus, EAC, WEEE	CE, cULus, EAC, WEEE	
Trademark	—	—	Global	
Productview	Page 410	Page 410	Page 410	

			BOS01HK BOS 18M-PS-IR23-S4		
	BOS01F0 BOS 18M-PA-IR20-S4	**BOS01HR** BOS 18M-PA-IR21-S4		**BOS01NE** BOS 18M-PA-LR20-S4	**BOS01CE** BOS 18M-PA-PR20-S4
	18M	18M	18M	18M	18M
	Ø 18 x 75 mm	Ø 18 x 75 mm	Ø 18 x 75 mm	Ø 18 x 75 mm	Ø 18 x 75 mm
	–	–	–	–	–
	Photoelectric sensor	Photoelectric sensor	Photoelectric sensor	Photoelectric sensor	Photoelectric sensor
	Retroreflective sensor	Retroreflective sensor	Retroreflective sensor	Retroreflective sensor	Retroreflective sensor
	–	–	–	–	–
	Divergent	Divergent	Divergent	Collimated	Divergent
	LED infrared	LED infrared	LED infrared	Laser red light	LED, red light
	Ø 300 mm at 7 m	Ø 300 mm at 7 m	Ø 300 mm at 7 m	Ø 10 mm at 16 m	Ø 300 mm at 7 m
	0...10 m	0...7 m	0...6 m	0...16 m	0...7 m
	Connector, M12x1-Male, 4-pin	Connector, M12x1-Male, 4-pin	Connector, M12x1-Male, 4-pin	Connector, M12x1-Male, 4-pin	Connector, M12x1-Male, 4-pin
	Brass, nickel plated	Brass, nickel plated	Brass, nickel plated	Brass, nickel plated	Brass, nickel plated
	Glass, anti-glare	Glass, anti-glare	Glass, anti-glare	Glass	Glass, anti-glare
	10...30 VDC	10...30 VDC	10...30 VDC	10...30 VDC	10...30 VDC
	cULus, CE, EAC, WEEE	CE, cULus, EAC, WEEE	cULus, CE, EAC, WEEE	cULus, CE, EAC, WEEE	CE, cULus, EAC, WEEE
	–	–	–	–	–
	Page 410	Page 410	Page 410	Page 410	Page 410

PNP normally open			**BOS01F8** BOS 18M-PS-PR23-S4	
PNP normally open, PNP normally closed	**BOS01FJ** BOS 18M-PA-PR20-S4S			
PNP normally open/normally closed/IO-Link 1.1		**BOS01UE** BOS 18M-PI-PR30-S4		
Series	18M	18M	18M	
Dimension	Ø 18 x 75 mm	Ø 18 x 75 mm	Ø 18 x 75 mm	
Input function	—	—	—	
Principle of operation	Photoelectric sensor	Photoelectric sensor	Photoelectric sensor	
Principle of optical operation	Retroreflective sensor	Retroreflective sensor	Retroreflective sensor	
Special optical feature	—	—	—	
Beam characteristic	Divergent	Divergent	Divergent	
Light type	LED, red light	LED, red light	LED, red light	
Light spot size	Ø 300 mm at 7 m	Ø 300 mm at 7 m	Ø 300 mm at 7 m	
Range	0...7 m	0...5 m	0...4 m	
Connection	Connector, M12x1-Male, 4-pin	Connector, M12x1-Male, 4-pin	Connector, M12x1-Male, 4-pin	
Housing material	Brass, nickel plated	Brass, nickel plated	Brass, nickel plated	
Material sensing surface	Glass, anti-glare	Glass	Glass, anti-glare	
Operating voltage Ub	10...30 VDC	18...30 VDC	10...30 VDC	
Approval/Conformity	cULus, CE, EAC, WEEE	CE, cULus, EAC, WEEE	CE, cULus, EAC, WEEE	
Trademark	—	—	—	
Productview	Page 410	Page 410	Page 410	

	BOS01KL BOS 18E-PA-PR20-S4	**BOS023Y** BOS 18E-PA-PR30-S4			
	18E	18E			
	Ø 18 x 75 mm	Ø 18 x 75 mm			
	—	—			
	Photoelectric sensor	Photoelectric sensor			
	Retroreflective sensor	Retroreflective sensor			
	—	—			
	Divergent	Divergent			
	LED, red light	LED, red light			
	Ø 300 mm at 7 m	Ø 300 mm at 7 m			
	5 m	5 m			
	Connector, M12x1-Male, 4-pin	Connector, M12x1-Male, 4-pin			
	Stainless steel (1.4404)	Stainless steel (1.4404)			
	Glass	PMMA			
	10...30 VDC	10...30 VDC			
	CE, cULus, Ecolab, FDA compliant, EAC, WEEE	Ecolab, cULus, CE, EAC, WEEE, FDA compliant			
	—	—			
	Page 411	Page 411			

PNP normally open, PNP normally closed	**BOS00LM** BOS 18KW-PA-1LQH-S4-C	**BOS00LW** BOS 18KW-PA-1QC-S4-C	**BOS00LZ** BOS 18KW-PA-1TB-S4-C	
Series	18KW	18KW	18KW	
Dimension	Ø 18 x 93.5 mm	Ø 18 x 93.5 mm	Ø 18 x 93.5 mm	
Input function	—	—	—	
Principle of operation	Photoelectric sensor	Photoelectric sensor	Photoelectric sensor	
Principle of optical operation	Retroreflective sensor	Retroreflective sensor	Retroreflective sensor	
Special optical feature	—	—	Transparency detection	
Beam characteristic	—	—	—	
Light type	Laser red light	LED, red light	LED, red light	
Light spot size	—	—	—	
Range	0...9 m	0...3 m	0...1.7 m	
Connection	Connector, M12x1-Male, 4-pin	Connector, M12x1-Male, 4-pin	Connector, M12x1-Male, 4-pin	
Housing material	PBT	PBT	PBT	
Material sensing surface	PMMA	PMMA	PMMA	
Operating voltage Ub	10...30 VDC	10...30 VDC	10...30 VDC	
Approval/Conformity	CE, cULus, EAC, WEEE	CE, cULus, EAC, WEEE	CE, cULus, EAC, WEEE	
Trademark	Global	Global	Global	
Productview	Page 411	Page 411	Page 411	

	BOS00K5 BOS 18KF-PA-1RE-S4-C	BOS00JT BOS 18KF-PA-1LQP-S4-C	BOS00K3 BOS 18KF-PA-1QD-S4-C	BOS00K7 BOS 18KF-PA-1TB-S4-C	
	18KF	18KF	18KF	18KF	
	Ø 18 x 71.5 mm	Ø 18 x 81.5 mm	Ø 18 x 81.5 mm	Ø 18 x 81.5 mm	
	—	—	—	—	
	Photoelectric sensor	Photoelectric sensor	Photoelectric sensor	Photoelectric sensor	
	Retroreflective sensor	Retroreflective sensor	Retroreflective sensor	Retroreflective sensor	
	—	—	—	Transparency detection	
	—	—	—	—	
	LED infrared	Laser red light	LED, red light	LED, red light	
	—	—	—	—	
	0...5 m	0...16 m	0...4.5 m	0...1.7 m	
	Connector, M12x1-Male, 4-pin	Connector, M12x1-Male, 4-pin	Connector	Connector, M12x1-Male, 4-pin	
	PBT	PBT	PBT	PBT	
	PMMA	PMMA	PMMA	PMMA	
	10...30 VDC	10...30 VDC	10...30 VDC	10...30 VDC	
	CE, cULus, EAC, WEEE	CE, cULus, EAC, WEEE	CE, cULus, EAC, WEEE	CE, cULus, EAC, WEEE	
	Global	Global	Global	Global	
	Page 411	Page 411	Page 411	Page 411	

PNP normally open	**BOS01MU** BOS Q08M-PS-LR20-00,2-S49	**BOS01MP** BOS Q08M-PS-LR20-S49	**BOS01T9** BOS Q08M-PS-PR20-00,2-S49	
PNP normally closed	**BOS01MW** BOS Q08M-PO-LR20-00,2-S49			
Series	Q08M	Q08M	Q08M	
Dimension	8 x 59 x 8 mm	8 x 59 x 8 mm	8 x 44 x 8 mm	
Input function	—	—	—	
Principle of operation	Photoelectric sensor	Photoelectric sensor	Photoelectric sensor	
Principle of optical operation	Retroreflective sensor	Retroreflective sensor	Retroreflective sensor	
Special optical feature	—	—	—	
Beam characteristic	Divergent	Divergent	Divergent	
Light type	Laser red light	Laser red light	LED, red light	
Light spot size	Ø 3.0 mm Light exit	Ø 3.0 mm Light exit	Ø 3.0 mm Light exit	
Range	0...1 m	0...1 m	0...1 m	
Connection	Cable with connector, M8x1-Male, 3-pin, 0.20 m, PUR	Connector, M8x1-Male, 3-pin	Cable with connector, 0.20 m, PUR	
Housing material	Zinc, Die casting, nickel plated	Zinc, Die casting, nickel plated	Zinc, Die casting, nickel plated	
Material sensing surface	PMMA	PMMA	PMMA	
Operating voltage Ub	10...30 VDC	10...30 VDC	10...30 VDC	
Approval/Conformity	cULus, CE, EAC, WEEE	CE, cULus, EAC, WEEE	CE, cULus, EAC, WEEE	
Trademark	—	—	—	
Productview	Page 411	Page 411	Page 411	

	BOS01T8 BOS Q08M-PS-PR20-S49	BOS020T BOS R020K-PS-PR11-00,2-S49	BOS020U BOS R020K-PS-PR11-00,2-S75	BOS020R BOS R020K-PS-PR11-02	BOS021L BOS R01E-PS-KR20-00,2-S49
	Q08M	R020K	R020K	R020K	R01E
	8 x 59 x 8 mm	7.7 x 26.8 x 13.5 mm	7.7 x 26.8 x 13.5 mm	7.7 x 26.8 x 13.5 mm	20 x 32 x 9 mm
	—	—	—	—	—
	Photoelectric sensor	Photoelectric sensor	Photoelectric sensor	Photoelectric sensor	Photoelectric sensor
	Retroreflective sensor	Retroreflective sensor	Retroreflective sensor	Retroreflective sensor	Retroreflective sensor
	—	—	—	—	—
	Divergent	Divergent	Divergent	Divergent	Divergent
	LED, red light	LED, red light	LED, red light	LED, red light	LED, red light
	Ø 3.0 mm Light exit	Ø 10 mm at 100 mm	Ø 10 mm at 100 mm	Ø 11 mm at 250 mm	Ø 3.0 mm Light exit
	0...1 m	0...3 m	0...3 m	0...3 m	1 m
	Connector, M8x1-Male, 3-pin	Cable with connector, M8x1-Male, 3-pin, 0.20 m, PVC	Cable with connector, M8x1-Male, 4-pin, 0.20 m, PVC	Cable, 2.00 m, PVC	Cable with connector, M8x1-Male, 3-pin, 0.20 m, PUR
	Zinc, Die casting, nickel plated	ABS	ABS	ABS	Stainless steel (1.4404)
	PMMA	PMMA	PMMA	PMMA	PA
	10...30 VDC	10...30 VDC	10...30 VDC	10...30 VDC	10...30 VDC
	cULus, CE, EAC, WEEE	CE, cULus, EAC, WEEE	CE, cULus, EAC, WEEE	CE, cULus, EAC, WEEE	CE, cULus, Ecolab, EAC, WEEE
	—	—	—	—	—
	Page 411	Page 412	Page 412	Page 412	Page 412

PNP normally open	**BOS021M** BOS R01E-PS-KR20-02			
PNP normally closed				
PNP normally open/normally closed		**BOS01JT** BOS 5K-PU-LR10-02	**BOS01JW** BOS 5K-PU-LR10-S75	
Series	R01E	5K	5K	
Dimension	20 x 32 x 9 mm	10.8 x 32.7 x 19.5 mm	10.8 x 43.5 x 19.5 mm	
Input function	—	—	—	
Principle of operation	Photoelectric sensor	Photoelectric sensor	Photoelectric sensor	
Principle of optical operation	Retroreflective sensor	Retroreflective sensor	Retroreflective sensor	
Special optical feature	—	—	—	
Beam characteristic	Divergent	Divergent	Divergent	
Light type	LED, red light	Laser red light	Laser red light	
Light spot size	Ø 3.0 mm Light exit	Ø 5 mm at 3 m	Ø 5 mm at 3 m	
Range	1 m	0...10 m	0...10 m	
Connection	Cable, 2.00 m, PUR	Cable, 2.00 m, PVC	Connector, M8x1-Male, 4-pin	
Housing material	Stainless steel (1.4404)	PC PBT	PC PBT	
Material sensing surface	PA	PMMA	PMMA	
Operating voltage Ub	10...30 VDC	10...30 VDC	10...30 VDC	
Approval/Conformity	CE, cULus, Ecolab, EAC, WEEE	CE, cULus, CDRH, EAC, WEEE	cULus, CE, CDRH, EAC, WEEE	
Trademark	—	Global	Global	
Productview	Page 412	Page 412	Page 412	

BOS012E BOS 5K-PS-RR10-S75	**BOS012C** BOS 5K-PS-RR10-02	**BOS015E** BOS 5K-PS-RR10-S49		
BOS0121 BOS 5K-PO-RR10-S75				
			BOS01M4 BOS 6K-PU-LK10-S75	**BOS01MH** BOS 6K-PU-PR10-S49
5K	5K	5K	6K	6K
10.8 x 43.5 x 19.5 mm	10.8 x 32.7 x 19.5 mm	10.8 x 43.5 x 19.5 mm	12 x 41.5 x 21.6 mm	12 x 41.5 x 21.6 mm
—	—	—	Same function as button, Key disable on/off	—
Photoelectric sensor	Photoelectric sensor	Photoelectric sensor	Photoelectric sensor	Photoelectric sensor
Retroreflective sensor	Retroreflective sensor	Retroreflective sensor	Retroreflective sensor	Retroreflective sensor
—	—	—	Coaxial optics	—
Divergent	Divergent	Divergent	Collimated	Divergent
LED, red light	LED, red light	LED, red light	Laser red light	LED, red light
Ø 160 mm at 2 m	Ø 160 mm at 2 m	Ø 160 mm at 2 m	Ø 2 mm at 2.5 m	600 x 600 mm at 7 m
0...4 m	0...4 m	0...4 m	0...4 m	0...6 m
Connector, M8x1-Male, 4-pin	Cable, 2.00 m, PVC	Connector, M8x1-Male, 3-pin	Connector, M8x1-Male, 4-pin	Connector, M8x1-Male, 3-pin
PC PBT	PC PBT	PC PBT	ABS	ABS
PMMA	PMMA	PMMA	PMMA	PMMA
10...30 VDC	10...30 VDC	10...30 VDC	10...30 VDC	10...30 VDC
cULus, CE, EAC, WEEE	cULus, CE, EAC, WEEE	cULus, CE, EAC, WEEE	CE, cULus, EAC, WEEE	CE, cULus, EAC, WEEE
Global	Global	Global	—	—
Page 412	Page 412	Page 412	Page 413	Page 413

PNP normally open, PNP normally closed			**BOS00TL** BOS 21M-PA-LR10-S4	
PNP normally open/normally closed	**BOS01MJ** BOS 6K-PU-PR10-S75	**BOS01L8** BOS 6K-PU-PT10-S75		
PNP normally open/normally closed/IO-Link 1.1				
Series	6K	6K	21M	
Dimension	12 x 41.5 x 21.6 mm	12 x 41.5 x 21.6 mm	15 x 50 x 42.5 mm	
Input function	Key disable on/off, Same function as button	Key disable on/off, Same function as button	—	
Principle of operation	Photoelectric sensor	Photoelectric sensor	Photoelectric sensor	
Principle of optical operation	Retroreflective sensor	Retroreflective sensor	Retroreflective sensor	
Special optical feature	—	Coaxial optics, Transparency detection	—	
Beam characteristic	Divergent	Divergent	Collimated	
Light type	LED, red light	LED, red light	Laser red light	
Light spot size	600 x 600 mm at 7 m	50 x 50 mm at 2 m	—	
Range	0...6 m	0...2 m	0...20 m	
Connection	Connector, M8x1-Male, 4-pin	Connector, M8x1-Male, 4-pin	Connector, M12x1-Male, 4-pin	
Housing material	ABS	ABS	Zinc, Die casting, Powder coated Aluminum	
Material sensing surface	PMMA	PMMA	PMMA	
Operating voltage Ub	10...30 VDC	10...30 VDC	10...30 VDC	
Approval/Conformity	cULus, CE, EAC, WEEE	cULus, CE, EAC, WEEE	CE, cULus, EAC, WEEE	
Trademark	—	—	—	
Productview	Page 413	Page 413	Page 413	

BOS00TN BOS 21M-PA-PK10-S4	**BOS00TR** BOS 21M-PA-PR10-S4	**BOS00TU** BOS 21M-PA-PT10-S4		
			BOS027M BOS 21M-PAI-PR30-S4	**BOS0286** BOS R254K-UUI-PR10-S4
21M	21M	21M	21M	R254K
15 x 50 x 42.5 mm	15 x 50 x 42.5 mm	15 x 50 x 42.5 mm	15.4 x 51.1 x 42.7 mm	20.4 x 60.3 x 49.5 mm
—	—	—	—	—
Photoelectric sensor	Photoelectric sensor	Photoelectric sensor	Photoelectric sensor	Photoelectric sensor
Retroreflective sensor	Retroreflective sensor	Retroreflective sensor	Retroreflective sensor	Retroreflective sensor
Coaxial optics	—	Coaxial optics, Transparency detection	—	—
Divergent	Divergent	—	Divergent	Divergent
LED, red light	LED, red light	LED, red light	LED, red light	LED, red light
—	—	—	—	200 x 200 mm at 8 m
0...4 m	0...8 m	0...2 m	0...10 m	8 m
Connector, M12x1-Male, 4-pin	Connector, M12x1-Male, 4-pin	Connector, M12x1-Male, 4-pin	Connector, M12x1-Male, 4-pin	Connector, M12x1-Male, 4-pin
Zinc, Die casting, Powder coated Aluminum	Zinc, Die casting, Powder coated Aluminum	Zinc, Die casting, Powder coated Aluminum	Zinc, Die casting, Powder coated Die-cast zinc	PA 12 PA PACM 12
Glass	PMMA	Glass	PMMA	PA PACM 12
10...30 VDC	10...30 VDC	10...30 VDC	10...30 VDC	10...30 VDC
CE, cULus, EAC, WEEE	CE, cULus, EAC, WEEE	cULus, CE, EAC, WEEE	CE, cULus, WEEE, EAC, Ecolab	CE, EAC
—	—	—	—	—
Page 413	Page 413	Page 413	Page 413	Page 410

PNP normally open, PNP normally closed	**BOS01NC** BOS 23K-PA-LK10-S4		**BOS01FN** BOS 23K-PA-RR10-S4	
PNP normally open/normally closed		**BOS016U** BOS 23K-PU-LR10-S4		
Relay normally open/normally closed				
Series	23K	23K	23K	
Dimension	23 x 51 x 52.4 mm	23 x 51 x 52.4 mm	23 x 51 x 52.4 mm	
Input function	—	Key disable on/off, Same function as button	—	
Principle of operation	Photoelectric sensor	Photoelectric sensor	Photoelectric sensor	
Principle of optical operation	Retroreflective sensor	Retroreflective sensor	Retroreflective sensor	
Special optical feature	—	—	—	
Beam characteristic	Divergent	Divergent	Divergent	
Light type	Laser red light	Laser red light	LED, red light	
Light spot size	Ø 22 mm at 20 m	9 x 9 mm at 12 mm	300 x 300 mm at 12 m	
Range	0...20 m	0...14 m	0...14 m	
Connection	Connector, M12x1-Male, 4-pin	Connector, M12x1-Male, 4-pin	Connector, M12x1-Male, 4-pin	
Housing material	PC ABS	PC ABS	PC ABS	
Material sensing surface	PMMA	PMMA	PMMA	
Operating voltage Ub	10...30 VDC	10...30 VDC	10...30 VDC	
Approval/Conformity	Ecolab, CE, cULus, EAC, WEEE	Ecolab, CE, cULus, EAC, WEEE	Ecolab, CE, cULus, EAC, WEEE	
Trademark	—	—	—	
Productview	Page 413	Page 413	Page 414	

		BOS008L BOS 26K-PA-1LQP-S4-C	**BOS008M** BOS 26K-PA-1QE-S4-C	**BOS01CR** BOS 50K-PA-PR10-S4	
	BOS016P BOS 23K-PU-RR10-S4				
					BOS01K3 BOS 64K-AA-PR10-TG
	23K	26K	26K	50K	64K
	23 x 51 x 52.4 mm	17 x 50 x 50 mm	17 x 50 x 50 mm	28.5 x 80.5 x 62 mm	25 x 69.7 x 100.4 mm
	Key disable on/off, Same function as button	—	—	—	—
	Photoelectric sensor	Photoelectric sensor	Photoelectric sensor	Photoelectric sensor	Photoelectric sensor
	Retroreflective sensor	Retroreflective sensor	Retroreflective sensor	Retroreflective sensor	Retroreflective sensor
	—	Coaxial optics	Coaxial optics	—	—
	Divergent	Collimated	—	Divergent	Divergent
	LED, red light	Laser red light	LED, red light	LED, red light	LED, red light
	300 x 300 mm at 12 m	Ø 20 mm at 20 m	—	200 x 200 mm at 10 m	—
	0...14 m	0...25 m	0...5.5 m	0...18 m	0...10 m
	Connector, M12x1-Male, 4-pin	Connector, M12x1-Male, 4-pin	Connector, M12x1-Male, 4-pin	Connector, M12x1-Male, 4-pin	Screw terminals
	PC ABS	ABS	ABS	PC ABS	PBT, GF30
	PMMA	PMMA	PMMA	Glass	PC
	10...30 VDC	10...30 VDC	10...30 VDC	10...30 VDC	24...60 VDC/24...240 VAC
	Ecolab, CE, cULus, EAC, WEEE	cULus, CE, EAC, WEEE	CE, cULus, EAC, WEEE	CE, cULus, EAC, WEEE	CE, cULus, EAC, WEEE
	—	—	—	—	—
	Page 414	Page 414	Page 414	Page 414	Page 414

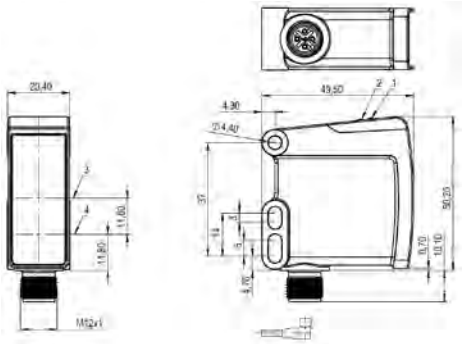

1) LED 1, 2) LED 2, 3) Optical axis receiver, 4) Optical axis emitter

BOS0286

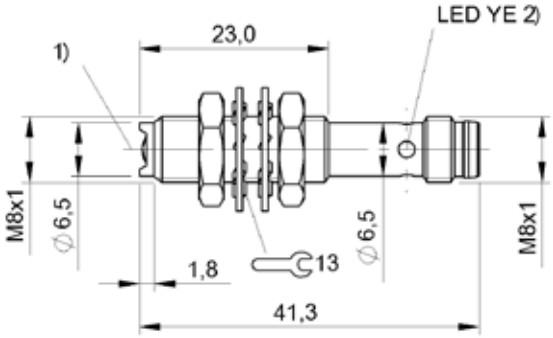

1) Optical axis, 2) Output function

BOS01RM, BOS01RK

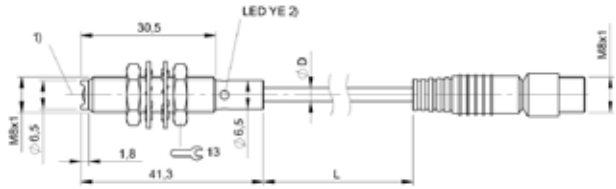

1) Optical axis, 2) Output function

BOS01RL

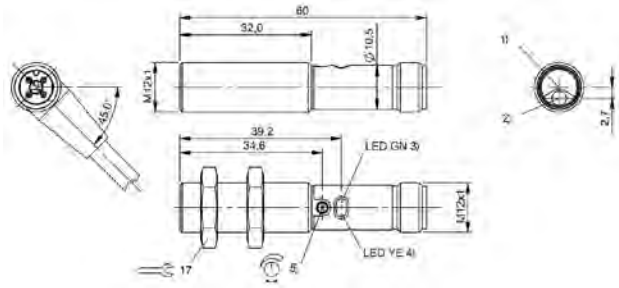

1) Optical axis receiver, 2) Optical axis emitter, 3) Operating voltage, 4) Light reception/limit area, 5) Sn

BOS01TT

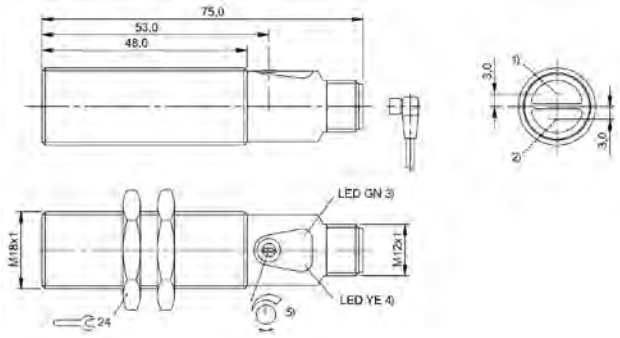

1) Optical axis receiver, 2) Optical axis emitter, 3) Operating voltage, 4) Light reception/limit area, 5) Sn

BOS01F0, BOS01HR, BOS01CE, BOS01FJ

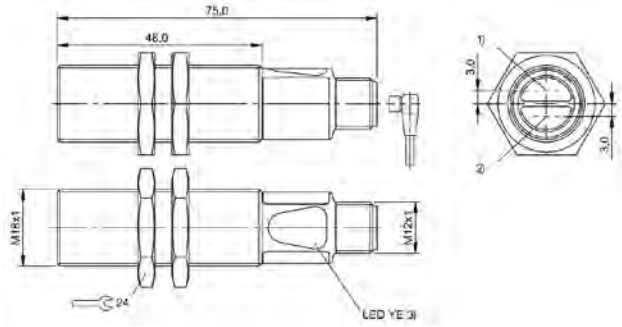

1) Optical axis receiver, 2) Optical axis emitter, 3) Light reception/limit area

BOS01HK, BOS01F8

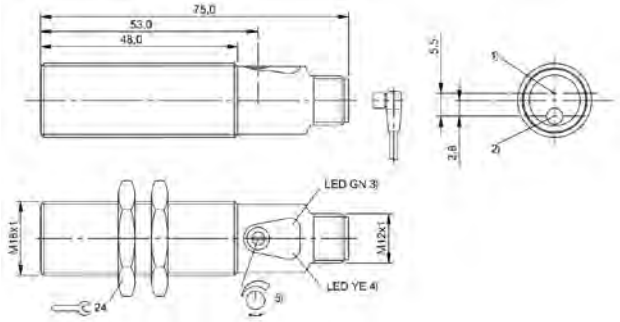

1) Optical axis receiver, 2) Optical axis emitter, 3) Operating voltage/Error, 4) Light reception/limit area, 5) Sn

BOS01NE

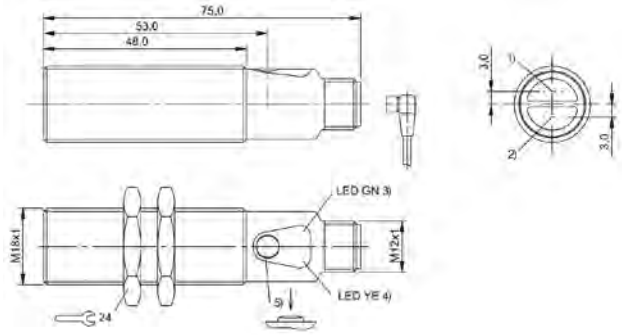

1) Optical axis receiver, 2) Optical axis emitter, 3) Power/short-circuit, 4) Light reception/limit area, 5) Sn

BOS01UE

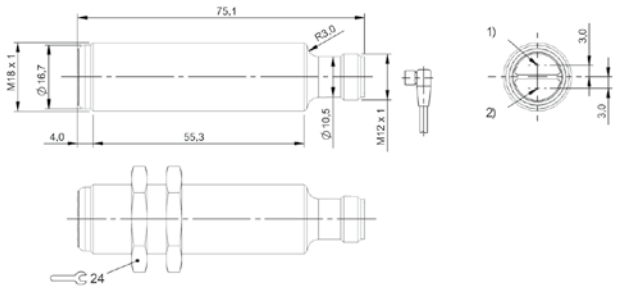

1) Optical axis receiver, 2) Optical axis emitter

BOS01KL, BOS023Y

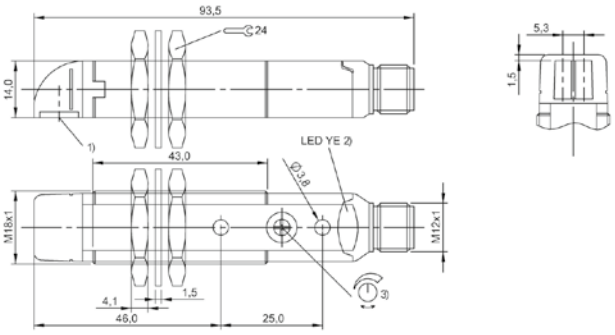

1) Optical axis, 2) Output function, 3) Sn

BOS00LM, BOS00LZ

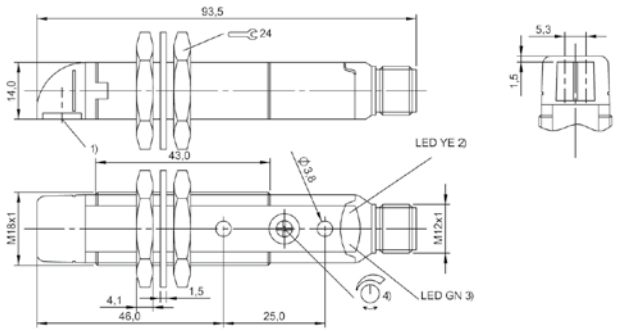

1) Optical axis, 2) Output function, 3) Stability, 4) Sn

BOS00LW

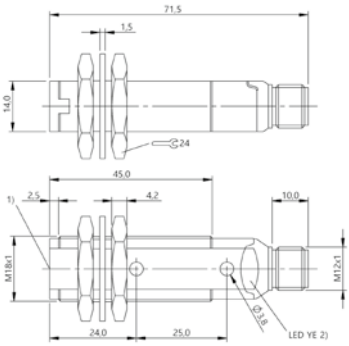

1) Optical axis, 2) Output function

BOS00K5

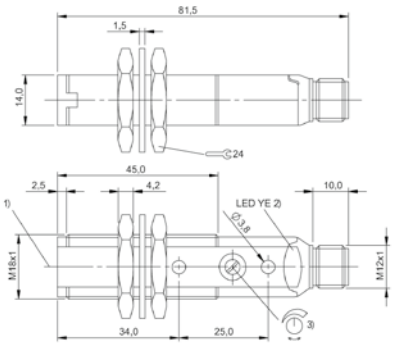

1) Optical axis, 2) Output function, 3) Sn

BOS00JT, BOS00K7

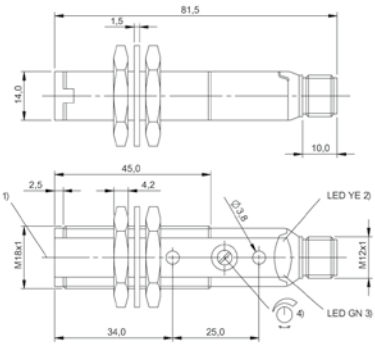

1) Optical axis, 2) Output function, 3) Stability, 4) Sn

BOS00K3

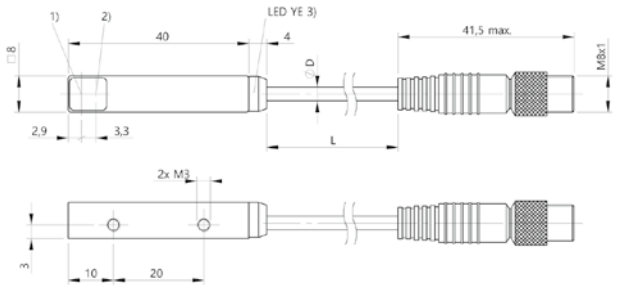

1) Optical axis emitter, 2) Optical axis receiver, 3) Output function

BOS01MW, BOS01MU, BOS01T9

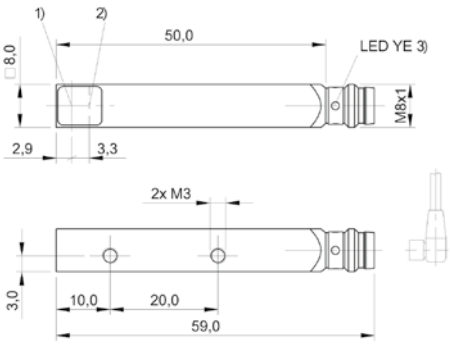

1) Optical axis emitter, 2) Optical axis receiver, 3) Output function

BOS01MP, BOS01T8

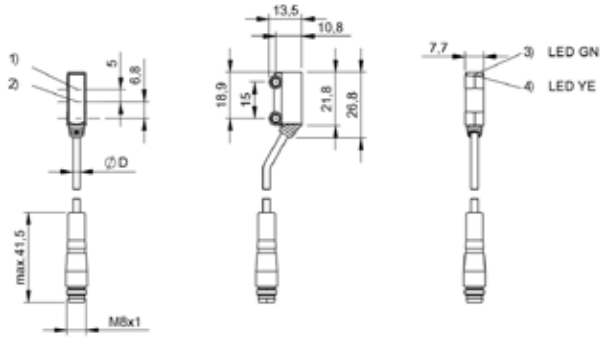

1) Optical axis receiver, 2) Optical axis emitter, 3) Operating voltage, 4) Light reception

BOS020T, BOS020U

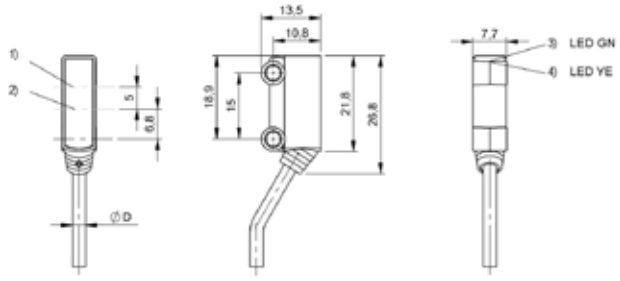

1) Optical axis receiver, 2) Optical axis emitter, 3) Operating voltage, 4) Light reception

BOS020R

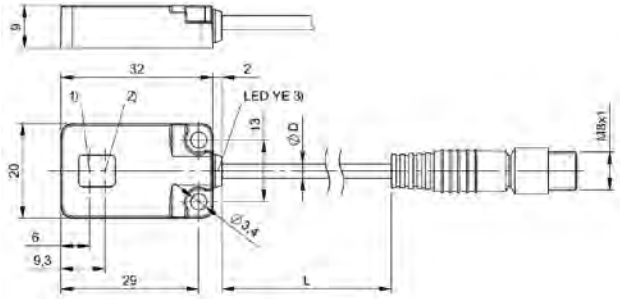

1) Optical axis emitter, 2) Optical axis receiver, 3) Output function

BOS021L

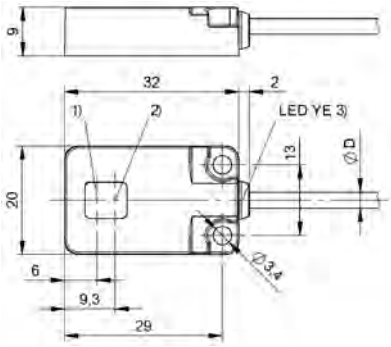

1) Optical axis emitter, 2) Optical axis receiver, 3) Output function

BOS021M

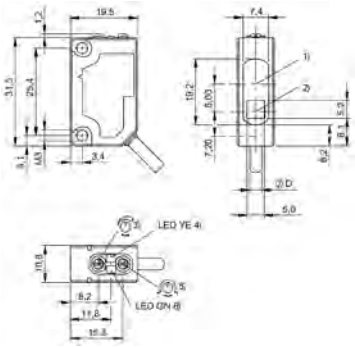

1) Optical axis receiver, 2) Optical axis emitter, 3) Sensitivity, 4) Output function,
5) Light-on/dark-on, 6) stability

BOS01JT

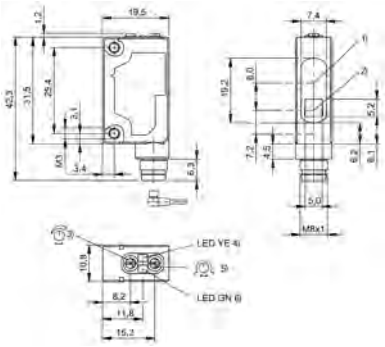

1) Optical axis receiver, 2) Optical axis emitter, 3) Sensitivity, 4) Output function,
5) Light-on/dark-on, 6) stability

BOS01JW

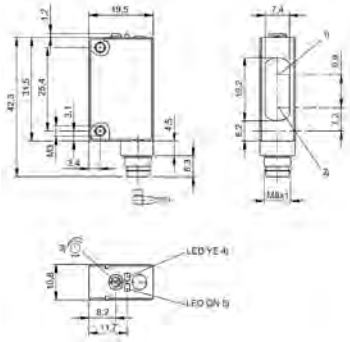

1) Optical axis receiver, 2) Optical axis emitter, 3) Sn, 4) Output function, 5) stability

BOS0121, BOS015E, BOS012E

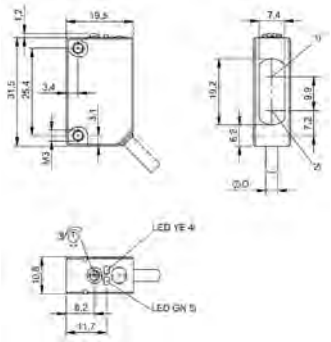

1) Optical axis receiver, 2) Optical axis emitter, 3) Sn, 4) Output function, 5) stability

BOS012C

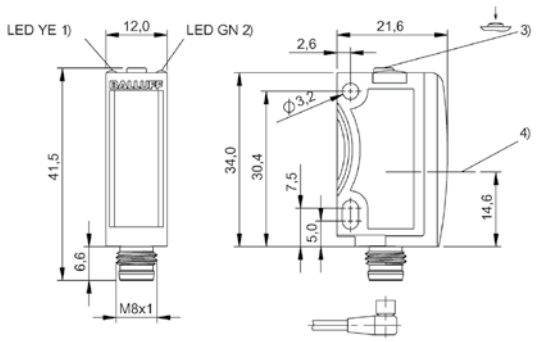

1) Output function, 2) Operating voltage, 3) Sensitivity, light/dark, 4) Optical axis

BOS01M4

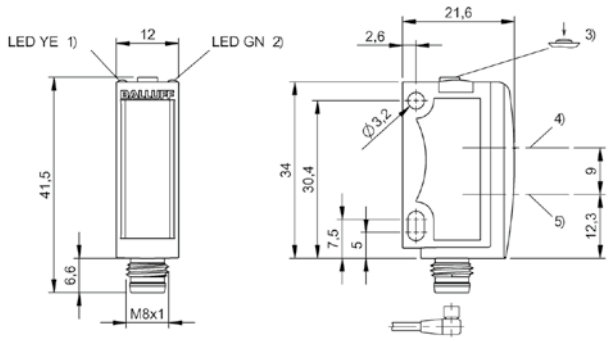

1) Output function, 2) Operating voltage, 3) Sensitivity, light/dark, 4) Optical axis receiver, 5) Optical axis emitter

BOS01MH, BOS01MJ

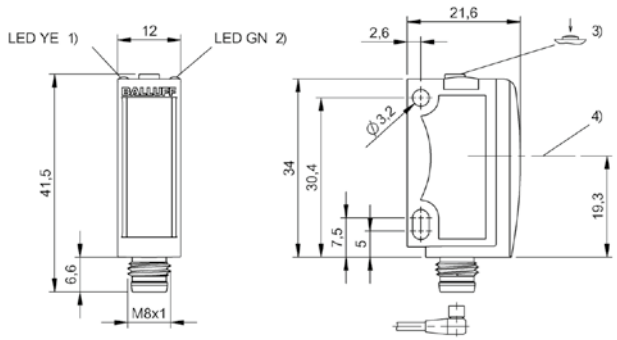

1) Output function, 2) Operating voltage, 3) Sensitivity, light/dark, 4) Optical axis

BOS01L8

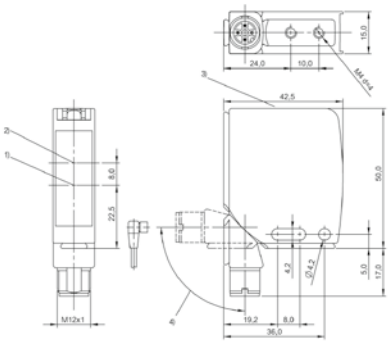

1) Optical axis emitter, 2) Optical axis receiver, 3) Display and control panel, 4) rotatable 270°

BOS00TL, BOS00TR

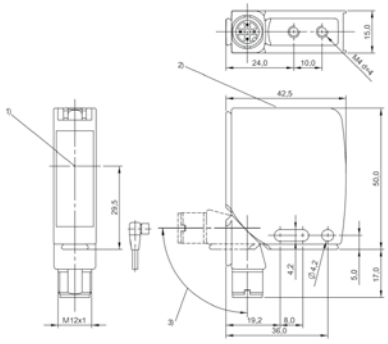

1) Optical axis, 2) Display and control panel, 3) rotatable 270°

BOS00TN, BOS00TU

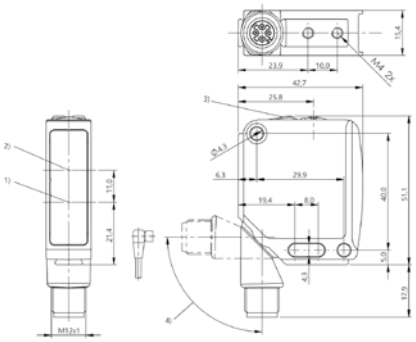

1) Optical axis emitter, 2) Optical axis receiver, 3) Display and control panel, 4) 240° rotatable

BOS027M

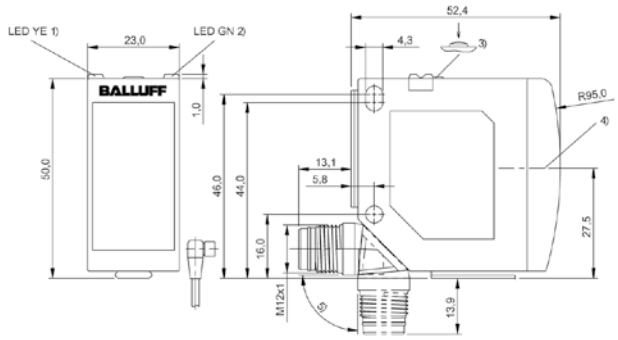

1) Output function/Error, 2) Operating voltage, 3) Sn, light/dark, 4) Optical axis, 5) rotatable 270°

BOS01NC

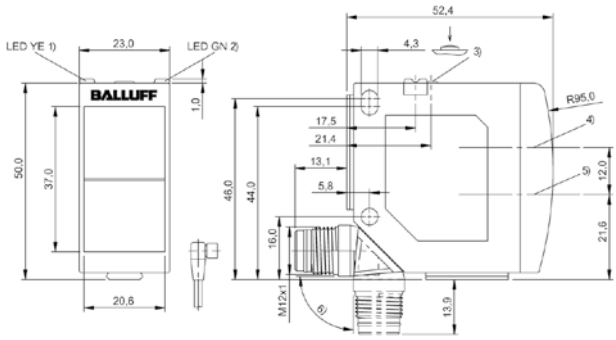

1) Output function/Error, 2) Operating voltage, 3) Sn, light/dark, 4) Optical axis receiver, 5) Optical axis emitter, 6) rotatable 270°

BOS016U

Do you need more details? Our Product Finder at www.balluff.com provides you with product-specific information, including technical drawings, data sheets, user guides and more for each individual product. All items are available for download.

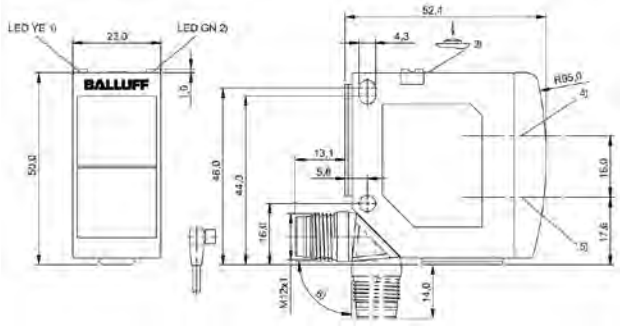

1) Output function/Error, 2) Operating voltage, 3) Sn, light/dark, 4) Optical axis receiver, 5) Optical axis emitter, 6) rotatable 270°

BOS01FN

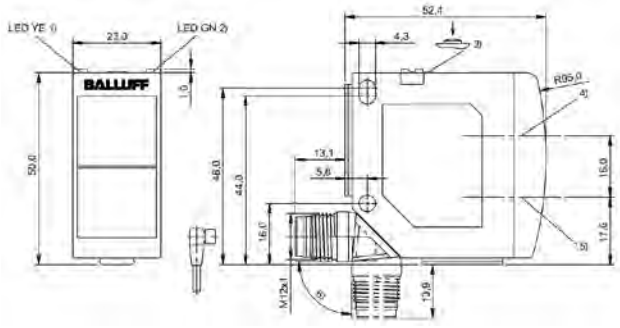

1) Output function/Error, 2) Power/setting mode, 3) Sn, light/dark, 4) Optical axis receiver, 5) Optical axis emitter, 6) rotatable 270°

BOS016P

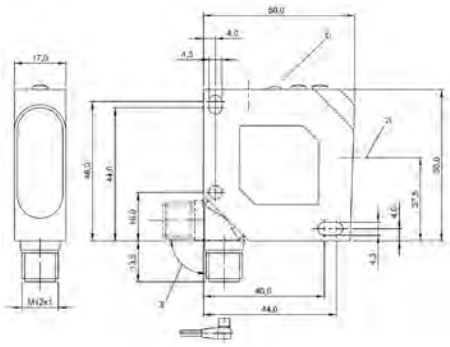

1) Display and control panel, 2) Optical axis, 3) rotatable 270°

BOS008L, BOS008M

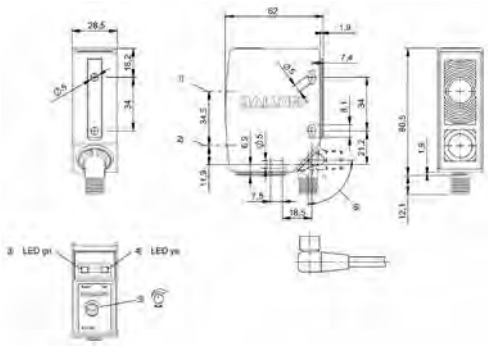

1) Optical axis receiver, 2) Optical axis emitter, 3) Operating voltage, 4) Light reception/limit area, 5) Sn, 6) rotatable 270°

BOS01CR

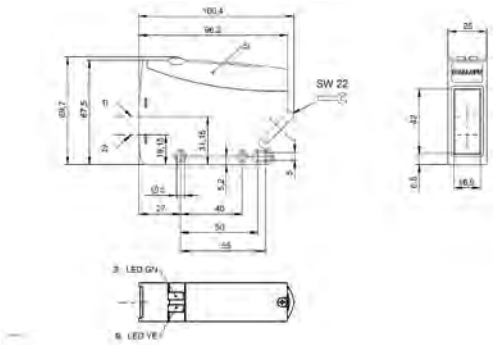

1) Optical axis receiver, 2) Optical axis emitter, 3) Stability, 4) Output function, 5) Removable cover

BOS01K3

Retroreflective sensor BOS 5K-_ _-RR10-_ _

Receiving characteristics

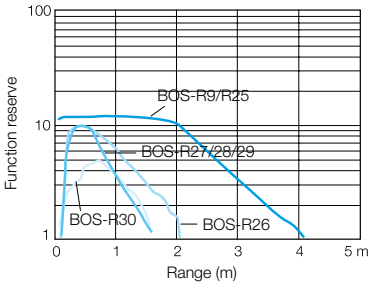

Characteristic response curve

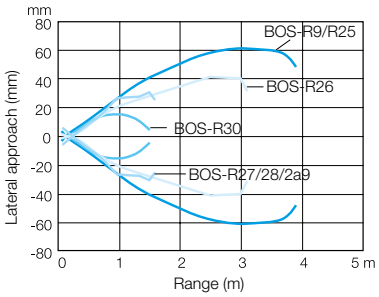

Angular Offset

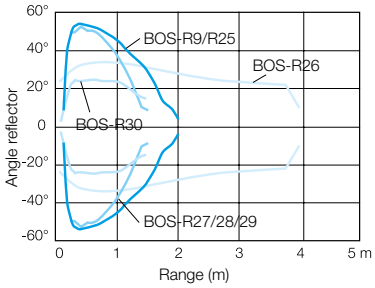

Retroreflective sensor BOS 12M-..-1QA-...

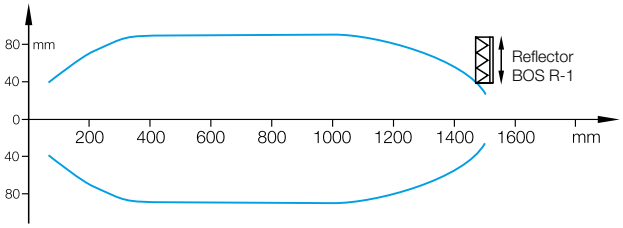

Range measured with side approach with reflector.

Retroreflective sensor BOS 18M...IR20/IR21-S4

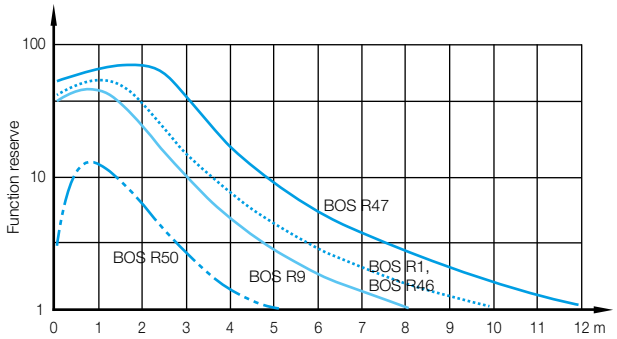

Retroreflective sensor BOS 18M...PR20...
Response curve

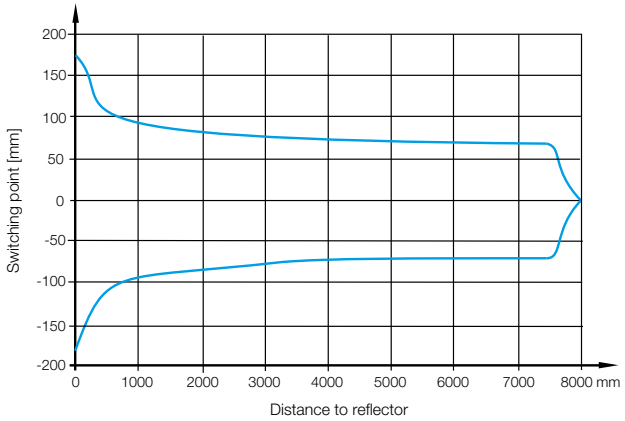

Retroreflective sensor BOS 18M...PR20...
Function reserve

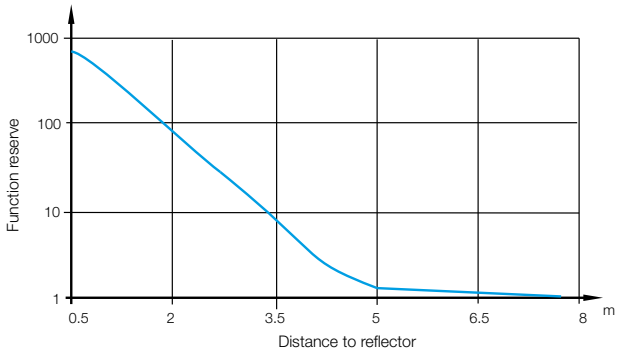

Retroreflective sensor BOS 18M...PR23
response curve

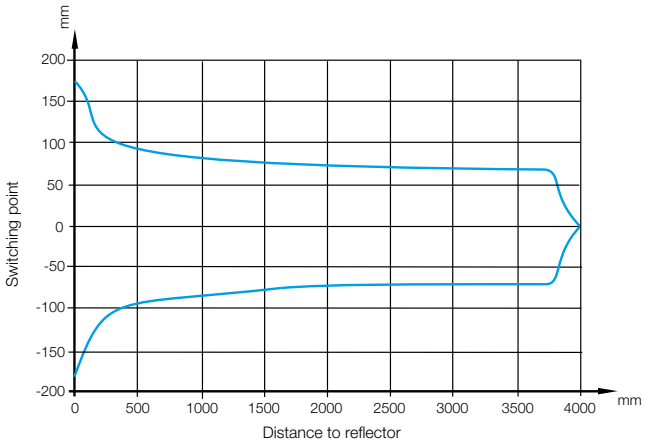

Retroreflective sensor BOS 18M...PR23
Function reserve

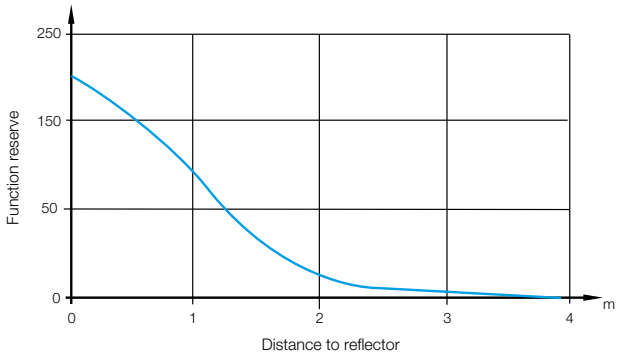

Retroreflective sensor BOS 18M-..-LR10-...

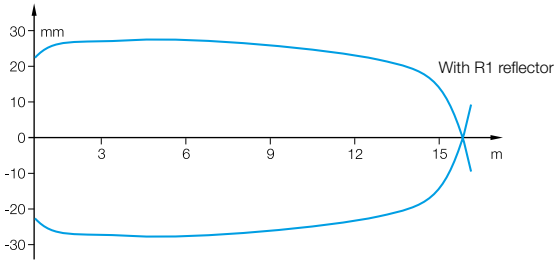

Detection range

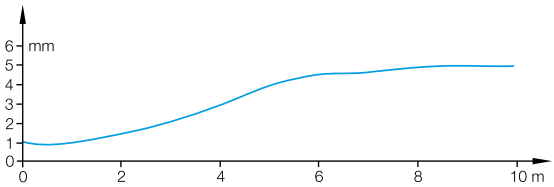

Resolution

Retroreflective sensor BOS 18MR-..-LR10-...

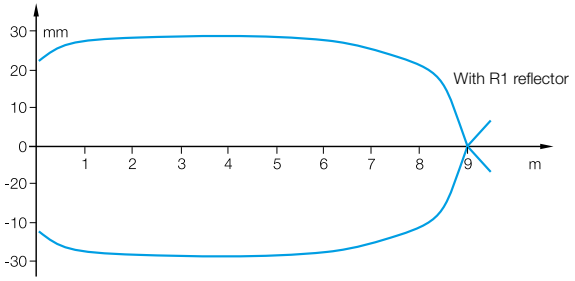

Detection range

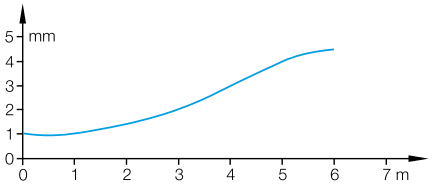

Resolution

Retroreflective sensor BOS 18E-...-1UB-...

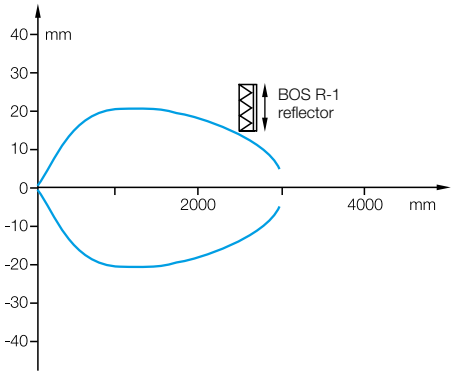

Range measured with side approach with reflector.

Retroreflective sensor BOS 18E-...-1WD-...

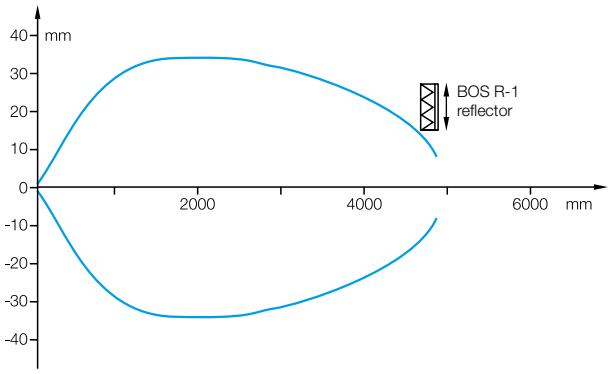

Range measured with side approach with reflector.

Retroreflective sensor BOS 18KF-..-1TB-...

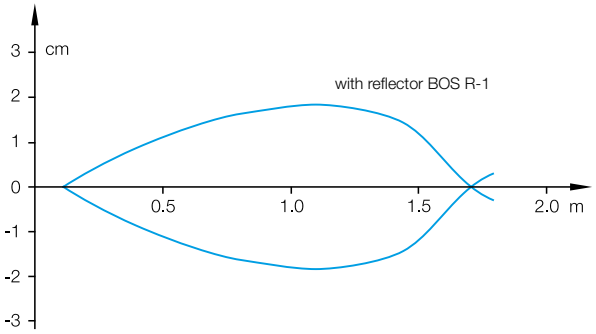

Detection range

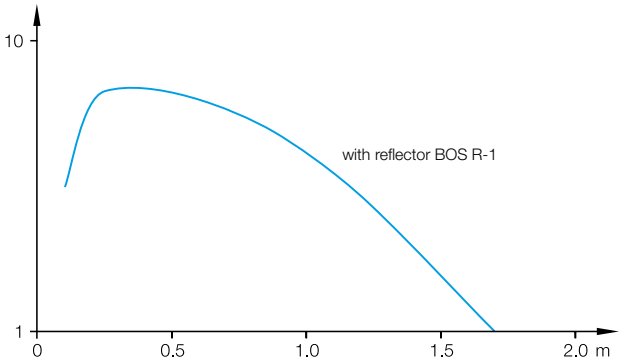

Function reserve

Retroreflective sensor BOS 18KF-..-1QD-...

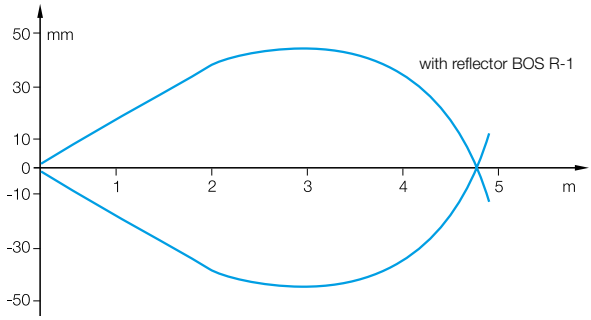

Detection range

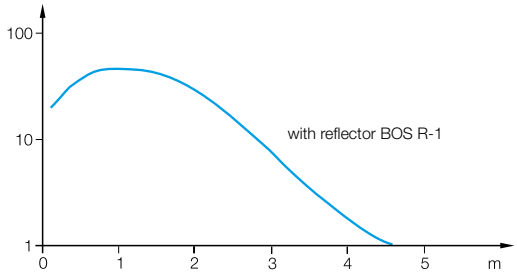

Function reserve

Retroreflective sensor BOS 18KF-..-1RE-...

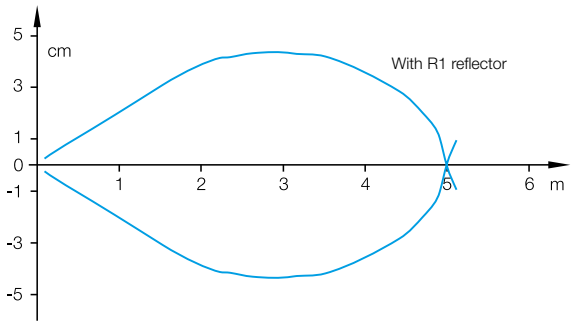

Detection range

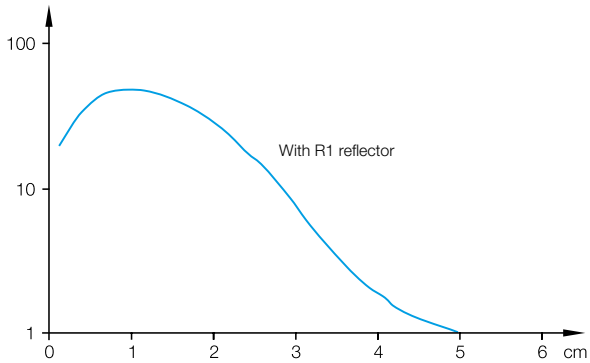

Function reserve

Retroreflective sensor BOS 18KF-..-1LQP-...

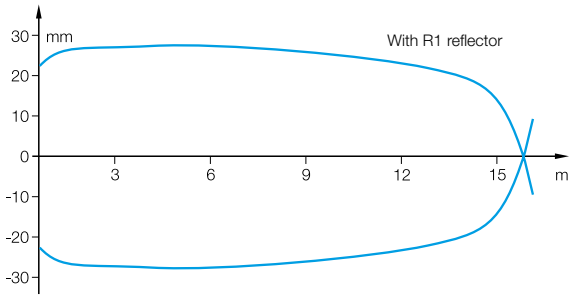

Detection range

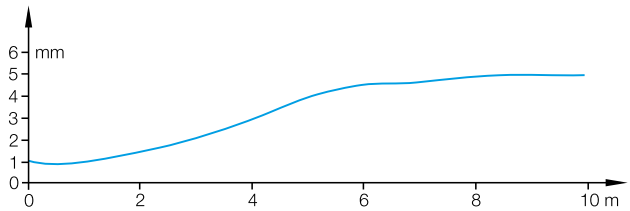

Resolution

Do you need more details? Our Product Finder at www.balluff.com provides you with product-specific information, including technical drawings, data sheets, user guides and more for each individual product. All items are available for download.

Retroreflective sensor BOS 18KW-..-1TB-...

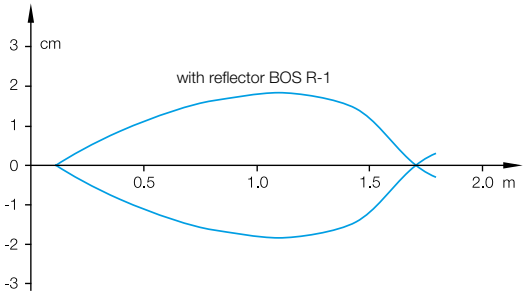

Detection range

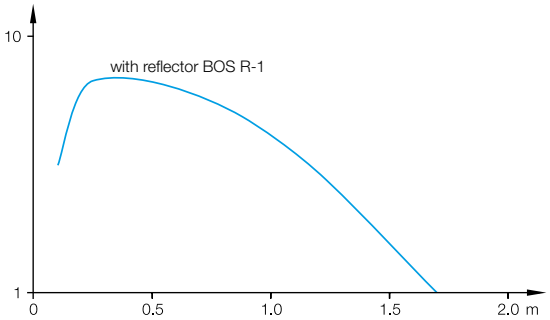

Function reserve

Retroreflective BOS 18KW-..-1LQH-...

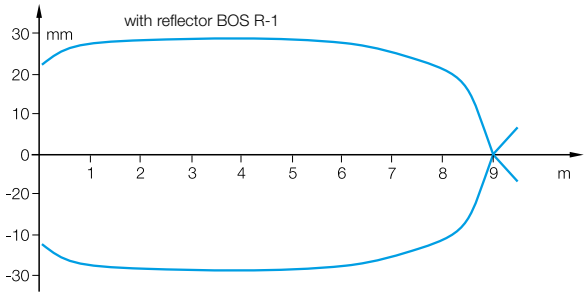

Detection range

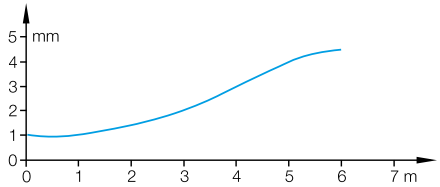

Resolution

Retroreflective sensor BOS 18KW-..-1QC-...

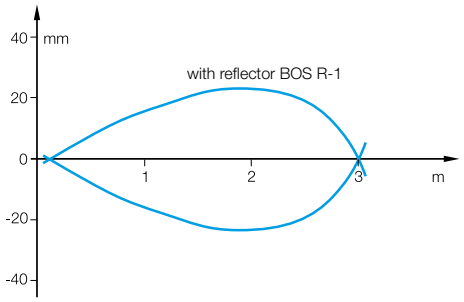

Detection range

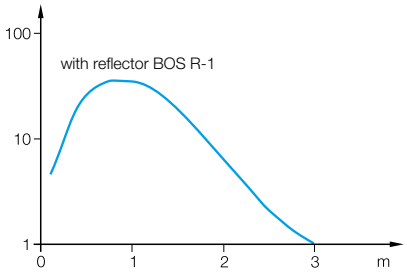

Function reserve

PNP normally open	**BOS01U3** BOS 08E-PS-LE20-S49	**BOS020F** BOS 08E-PS-KE20-S49		
PNP normally closed		**BOS020A** BOS 08E-PO-KE20-S49		
Emitter			**BOS01U8** BOS 08E-X-LS20-S49	
Series	08E	08E	08E	
Dimension	Ø 8 x 40 mm	Ø 8 x 40 mm	Ø 8 x 40 mm	
Interface	PNP normally open (NO)	PNP normally open (NO)	—	
Input function	—	—	—	
Principle of operation	Photoelectric sensor	Photoelectric sensor	Photoelectric sensor	
Principle of optical operation	Through-beam sensor (receiver)	Through-beam sensor (receiver)	Through-beam sensor (Emitter)	
Special optical feature	—	—	—	
Beam characteristic	—	—	Collimated	
Light type	Laser red light	LED, red light	Laser red light	
Light spot size	—	—	Ø 3.0 mm Light exit	
Range	0...3 m	0...2.2 m	0...3 m	
Connection	Connector, M8x1-Male, 3-pin	Connector, M8x1-Male, 3-pin	Connector, M8x1-Male, 3-pin	
Housing material	Stainless steel	Stainless steel	Stainless steel	
Material sensing surface	PMMA	PMMA	PMMA	
Operating voltage Ub	10...30 VDC	10...30 VDC	10...30 VDC	
Approval/Conformity	cULus, CE, EAC, WEEE	CE, cULus, EAC, WEEE	cULus, CE, EAC, WEEE	
Trademark	—	—	—	
Productview	Page 440	Page 440	Page 440	

			BOS01TY BOS 12M-PS-RE10-S4	
		BOS00WF BOS 12M-PA-LE10-S4		
BOS01Z5 BOS 08E-X-KS20-S49			**BOS00WH** BOS 12M-X-LS11-S4	**BOS00WJ** BOS 12M-X-LS12-S4
08E	12M	12M	12M	12M
Ø 8 x 40 mm	Ø 12 x 70 mm	Ø 12 x 60 mm	Ø 12 x 70 mm	Ø 12 x 70 mm
—	PNP NO PNP NC	PNP normally open (NO)	—	—
—	—	—	—	—
Photoelectric sensor	Photoelectric sensor	Photoelectric sensor	Photoelectric sensor	Photoelectric sensor
Through-beam sensor (Emitter)	Through-beam sensor (receiver)	Through-beam sensor (receiver)	Through-beam sensor (Emitter)	Through-beam sensor (Emitter)
—	—	—	—	—
Divergent	—	—	Focus, typical at 500 mm	Collimated
LED, red light	Laser red light	LED, red light	Laser red light	Laser red light
—	—	—	Ø 2.5 mm Light exit	Ø 2.5 mm Light exit
0...2.2 m	0...30 m	0...8 m	0...3 m	0...30 m
Connector, M8x1-Male, 3-pin	Connector, M12x1-Male, 4-pin	Connector, M12x1-Male, 4-pin	Connector, M12x1-Male, 4-pin	Connector, M12x1-Male, 4-pin
Stainless steel	Brass, nickel plated	Brass, nickel plated	Brass, nickel plated	Brass, nickel plated
PMMA	PMMA	PMMA	Glass	Glass
10...30 VDC	10...30 VDC	10...30 VDC	10...30 VDC	10...30 VDC
cULus, CE, EAC, WEEE	CE, cULus, EAC, WEEE	CE, cULus, EAC, WEEE	CE, cULus, EAC, WEEE	CE, cULus, EAC, WEEE
—	—	Global	—	—
Page 440	Page 440	Page 440	Page 440	Page 440

PNP normally open				
PNP normally open/normally closed				
PNP normally open/normally closed, IO-Link 1.1				
Emitter	**BOS00WL** BOS 12M-XT-LS11-S4	**BOS00WN** BOS 12M-XT-LS12-S4	**BOS01TW** BOS 12M-X-RS10-S4	
Series	12M	12M	12M	
Dimension	Ø 12 x 70 mm	Ø 12 x 70 mm	Ø 12 x 60 mm	
Interface	—	—	—	
Input function	Test (Emitter off)	Test (Emitter off)	—	
Principle of operation	Photoelectric sensor	Photoelectric sensor	Photoelectric sensor	
Principle of optical operation	Through-beam sensor (Emitter)	Through-beam sensor (Emitter)	Through-beam sensor (Emitter)	
Special optical feature	—	—	—	
Beam characteristic	Focus, typical at 500 mm	Collimated	—	
Light type	Laser red light	Laser red light	LED, red light	
Light spot size	Ø 2.5 mm Light exit	Ø 2.5 mm Light exit	Ø 280 mm at 8 m	
Range	0...3 m	0...30 m	0...8 m	
Connection	Connector, M12x1-Male, 4-pin	Connector, M12x1-Male, 4-pin	Connector, M12x1-Male, 4-pin	
Housing material	Brass, nickel plated	Brass, nickel plated	Brass, nickel plated	
Material sensing surface	Glass	Glass	PMMA	
Operating voltage Ub	10...30 VDC	10...30 VDC	10...30 VDC	
Approval/Conformity	CE, cULus, EAC, WEEE	CE, cULus, EAC, WEEE	CE, cULus, EAC, WEEE	
Trademark	—	—	Global	
Productview	Page 440	Page 440	Page 440	

BOS01NJ BOS 18M-PA-LE20-S4				
		BOS01J7 BOS 18M-PUV-RE30-S4		
	BOS01UC BOS 18M-PI-RE30-S4			
			BOS01NH BOS 18M-XT-LS20-S4	**BOS01CY** BOS 18M-X-RS30-S4
18M	18M	18M	18M	18M
Ø 18 x 75 mm	Ø 18 x 75 mm	Ø 18 x 75 mm	Ø 18 x 75 mm	Ø 18 x 75 mm
PNP NO PNP NC	PNP NO/NC IO-Link 1.1	PNP normally open/normally closed (NO/NC)	—	—
—	—	—	Test (Emitter off)	—
Photoelectric sensor	Photoelectric sensor	Photoelectric sensor	Photoelectric sensor	Photoelectric sensor
Through-beam sensor (receiver)	Through-beam sensor (receiver)	Through-beam sensor (receiver)	Through-beam sensor (Emitter)	Through-beam sensor (Emitter)
—	—	—	—	—
—	—	—	Collimated	—
Red light	LED, red light	LED, red light	Laser red light	LED, red light
—	—	—	Ø 40 mm at 60 m	—
0...60 m	0...20 m	0...20 m	0...60 m	0...20 m
Connector, M12x1-Male, 4-pin	Connector, M12x1-Male, 4-pin	Connector, M12x1-Male, 4-pin	Connector, M12x1-Male, 4-pin	Connector, M12x1-Male, 4-pin
Brass, nickel plated	Brass, nickel plated	Brass, nickel plated	Brass, nickel plated	Brass, nickel plated
Glass	Glass	Glass	Glass	Glass
10...30 VDC	18...30 VDC	10...30 VDC	10...30 VDC	10...30 VDC
cULus, CE, EAC, WEEE	cULus, CE, EAC, WEEE	cULus, CE, EAC, WEEE	cULus, CE, EAC, WEEE	CE, cULus, EAC, WEEE
—	—	—	—	—
Page 440	Page 441	Page 441	Page 441	Page 441

Do you need more details? Our Product Finder at www.balluff.com provides you with product-specific information, including technical drawings, data sheets, user guides and more for each individual product. All items are available for download.

PNP normally open		**BOS01KM** BOS 18E-PA-RE20-S4	**BOS023W** BOS 18E-PA-RE30-S4	
PNP normally open/normally closed, IO-Link 1.1				
Emitter	**BOS01UF** BOS 18M-XI-RS30-S4			
Series	18M	18E	18E	
Dimension	Ø 18 x 75 mm	Ø 18 x 75 mm	Ø 18 x 75 mm	
Interface	IO-Link 1.1	PNP NO PNP NC	PNP NO PNP NC	
Input function	—	—	—	
Principle of operation	Photoelectric sensor	Photoelectric sensor	Photoelectric sensor	
Principle of optical operation	Through-beam sensor (Emitter)	Through-beam sensor (receiver)	Through-beam sensor (receiver)	
Special optical feature	—	—	—	
Beam characteristic	—	—	—	
Light type	LED, red light	LED, red light	LED, red light	
Light spot size	—	—	—	
Range	0...20 m	0...20 m	0...20 m	
Connection	Connector, M12x1-Male, 4-pin	Connector, M12x1-Male, 4-pin	Connector, M12x1-Male, 4-pin	
Housing material	Brass, nickel plated	Stainless steel (1.4404)	Stainless steel (1.4404)	
Material sensing surface	Glass	Glass	PMMA	
Operating voltage Ub	18...30 VDC	10...30 VDC	10...30 VDC	
Approval/Conformity	cULus, CE, EAC, WEEE	FDA compliant, Ecolab, CE, cULus, EAC, WEEE	CE, cULus, Ecolab, EAC, WEEE	
Trademark	—	—	—	
Productview	Page 441	Page 441	Page 441	

	BOS023H BOS 18E-PI-RE30-S4			
		BOS01KT BOS 18E-X-RS20-S4	**BOS023U** BOS 18E-X-RS30-S4	**BOS023J** BOS 18E-XI-RS30-S4
	18E	18E	18E	18E
	Ø 18 x 75 mm	Ø 18 x 75 mm	Ø 18 x 75 mm	Ø 18 x 75 mm
	PNP NO/NC IO-Link 1.1	—	—	IO-Link 1.1
	—	—	—	—
	Photoelectric sensor	Photoelectric sensor	Photoelectric sensor	Photoelectric sensor
	Through-beam sensor (receiver)	Through-beam sensor (Emitter)	Through-beam sensor (Emitter)	Through-beam sensor (Emitter)
	—	—	—	—
	—	Divergent	Divergent	—
	LED, red light	LED, red light	LED, red light	LED, red light
	—	—	—	—
	0...20 m	0...20 m	0...20 m	0...20 m
	Connector, M12x1-Male, 4-pin	Connector, M12x1-Male, 4-pin	Connector, M12x1-Male, 4-pin	Connector, M12x1-Male, 4-pin
	Stainless steel (1.4571)	Stainless steel (1.4404)	Stainless steel (1.4404)	Stainless steel (1.4571)
	Glass	Glass	PMMA	Glass
	18...30 VDC	10...30 VDC	10...30 VDC	18...30 VDC
	cULus, CE, EAC, WEEE, FDA compliant	FDA compliant, Ecolab, cULus, CE, EAC, WEEE	CE, cULus, Ecolab, EAC, WEEE	cULus, CE, EAC, WEEE
	—	—	—	—
	Page 441	Page 441	Page 441	Page 441

PNP normally open, PNP normally closed				
PNP normally open/normally closed	**BOS00CT** BLE 18KW-PA-1LT-S4-C	**BOS00CW** BLE 18KW-PA-1PP-S4-C		
Emitter			**BOS00EW** BLS 18KW-XX-1P-S4-L	
Series	18KW	18KW	18KW	
Dimension	Ø 18 x 93.5 mm	Ø 18 x 93.5 mm	Ø 18 x 14 mm	
Interface	PNP NO PNP NC	PNP NO PNP NC	—	
Input function	—	—	Test (Emitter off)	
Principle of operation	Photoelectric sensor	Photoelectric sensor	Photoelectric sensor	
Principle of optical operation	Through-beam sensor (receiver)	Through-beam sensor (receiver)	Through-beam sensor (Emitter)	
Special optical feature	—	—	—	
Beam characteristic	—	—	—	
Light type	Red light	Infrared	Infrared	
Light spot size	—	—	—	
Range	0...50 m	0...15 m	0...15 m	
Connection	Connector, M12x1-Male, 4-pin	Connector, M12x1-Male, 4-pin	Connector, M12x1-Male, 4-pin	
Housing material	PBT	PBT	PBT	
Material sensing surface	PMMA	PMMA	PMMA	
Operating voltage Ub	10...30 VDC	10...30 VDC	10...30 VDC	
Approval/Conformity	CE, cULus, EAC, WEEE	CE, cULus, EAC, WEEE	CE, cULus, EAC, WEEE	
Trademark	Global	Global	Global	
Productview	Page 441	Page 441	Page 441	

		BOS00CH BLE 18KF-PA-1LT-S4-C	**BOS00CK** BLE 18KF-PA-1PP-S4-C		
	BOS00ET BLS 18KW-XX-1LT-S4-L			**BOS00EP** BLS 18KF-XX-1P-S4-L	**BOS00EM** BLS 18KF-XX-1LT-S4-L
	18KW	18KF	18KF	18KF	18KF
	Ø 18 x 83.5 mm	Ø 18 x 81.5 mm	Ø 18 x 81.5 mm	Ø 18 x 71.5 mm	Ø 18 x 71.5 mm
	—	PNP NO PNP NC	PNP NO PNP NC	—	—
	Test (Emitter off)	—	—	Test (Emitter off)	Test (Emitter off)
	Photoelectric sensor	Photoelectric sensor	Photoelectric sensor	Photoelectric sensor	Photoelectric sensor
	Through-beam sensor (Emitter)	Through-beam sensor (receiver)	Through-beam sensor (receiver)	Through-beam sensor (Emitter)	Through-beam sensor (Emitter)
	—	—	—	—	—
	—	—	—	—	—
	Laser red light	Red light	Infrared	Infrared	Laser red light
	—	—	—	—	—
	0...50 m	0...60 m	0...20 m	0...20 m	0...60 m
	Connector, M12x1-Male, 4-pin	Connector, M12x1-Male, 4-pin	Connector, M12x1-Male, 4-pin	Connector, M12x1-Male, 4-pin	Connector, M12x1-Male, 4-pin
	PBT	PBT	PBT	PBT	PBT
	PMMA	PMMA	PMMA	PMMA	PMMA
	10...30 VDC	10...30 VDC	10...30 VDC	10...30 VDC	10...30 VDC
	CE, cULus, EAC, WEEE	CE, cULus, EAC, WEEE	CE, cULus, EAC, WEEE	CE, cULus, EAC, WEEE	CE, cULus, EAC, WEEE
	Global	Global	Global	Global	Global
	Page 441	Page 441	Page 442	Page 442	Page 442

PNP normally open	**BOS01Y4** BOS Q08M-PS-KE21-S49	**BOS01Y6** BOS Q08M-PS-KE21-00,2-S49		
PNP normally closed	**BOS01Y7** BOS Q08M-PO-KE21-S49			
Emitter			**BOS01YM** BOS Q08M-X-KS21-00,2-S49	
Series	Q08M	Q08M	Q08M	
Dimension	8 x 59 x 8 mm	8 x 44 x 8 mm	8 x 44 x 8 mm	
Interface	PNP normally open (NO)	PNP normally open (NO)	—	
Input function	—	—	—	
Principle of operation	Photoelectric sensor	Photoelectric sensor	Photoelectric sensor	
Principle of optical operation	Through-beam sensor (receiver)	Through-beam sensor (receiver)	Through-beam sensor (Emitter)	
Special optical feature	—	—	—	
Beam characteristic	—	—	Divergent	
Light type	Red light	Red light	LED, red light	
Light spot size	—	—	—	
Range	0...2.2 m	0...2.2 m	0...2.2 m	
Connection	Connector, M8x1-Male, 3-pin	Cable with connector, M8x1-Male, 3-pin, 0.20 m, PUR	Cable with connector, M8x1-Male, 3-pin, 0.20 m, PUR	
Housing material	Zinc, Die casting, nickel plated	Zinc, Die casting, nickel plated	Zinc, Die casting, nickel plated	
Material sensing surface	PMMA	PMMA	PMMA	
Operating voltage Ub	10...30 VDC	10...30 VDC	10...30 VDC	
Approval/Conformity	CE, cULus, EAC, WEEE	CE, cULus, EAC, WEEE	cULus, CE, EAC, WEEE	
Trademark	—	—	—	
	Page 442	Page 442	Page 442	

		BOS0214 BOS R020K-PS-RX11-00,2-S49	**BOS0211** BOS R020K-PS-RX11-02		
	BOS01YK BOS Q08M-X-KS21-S49				
	Q08M	R020K	R020K		
	8 x 59 x 8 mm	7.7 x 26.8 x 13.5 mm	7.7 x 26.8 x 13.5 mm		
	—	PNP normally open (NO)	PNP normally open (NO)		
	—	—	—		
	Photoelectric sensor	Photoelectric sensor	Photoelectric sensor		
	Through-beam sensor (Emitter)	Through-beam sensor	Through-beam sensor		
	—	—	—		
	Divergent	Divergent	Divergent		
	LED, red light	LED, red light	LED, red light		
	—	Ø 23 mm at 500 mm	Ø 23 mm at 500 mm		
	0...2.2 m	0...2 m	0...2 m		
	Connector, M8x1-Male, 3-pin	Cable with connector, M8x1-Male, 3-pin, 0.20 m, PVC	Cable, 2.00 m, PVC		
	Zinc, Die casting, nickel plated	PC PBT	PC PBT		
	PMMA	PMMA	PMMA		
	10...30 VDC	10...30 VDC	10...30 VDC		
	CE, cULus, EAC, WEEE	cULus, CE, WEEE, EAC	cULus, CE, WEEE, EAC		
	—	—	—		
	Page 442	Page 442	Page 442		

PNP normally open	**BOS021N** BOS R01E-PS-KE20-00,2-S49	**BOS021P** BOS R01E-PS-KE20-02		
PNP normally closed				
PNP normally open/normally closed				
Emitter			**BOS021R** BOS R01E-X-KS20-00,2-S49	
Series	R01E	R01E	R01E	
Dimension	20 x 32 x 9 mm	20 x 32 x 9 mm	20 x 32 x 9 mm	
Interface	PNP normally open (NO)	PNP normally open (NO)	—	
Input function	—	—	—	
Principle of operation	Photoelectric sensor	Photoelectric sensor	Photoelectric sensor	
Principle of optical operation	Through-beam sensor	Through-beam sensor	Through-beam sensor	
Special optical feature	—	—	—	
Beam characteristic	—	—	Divergent	
Light type	LED, red light	LED, red light	LED, red light	
Light spot size	—	—	Ø 3.0 mm Light exit	
Range	0...2.2 m	0...2.2 m	0...2.2 m	
Connection	Cable with connector, M8x1-Male, 3-pin, 0.20 m, PUR	Cable, 2.00 m, PUR	Cable with connector, M8x1-Male, 3-pin, 0.20 m, PUR	
Housing material	Stainless steel (1.4404)	Stainless steel (1.4404)	Stainless steel (1.4404)	
Material sensing surface	PA	PA	PA	
Operating voltage Ub	10...30 VDC	10...30 VDC	10...30 VDC	
Approval/Conformity	CE, cULus, Ecolab, EAC, WEEE	cULus, CE, Ecolab, EAC, WEEE	cULus, CE, Ecolab, EAC, WEEE	
Trademark	—	—	—	
Productview	Page 443	Page 443	Page 443	

		BOS0126 BOS 5K-PS-IX10-S75	**BOS0125** BOS 5K-PS-IX10-02		
		BOS011R BOS 5K-PO-IX10-S75			
				BOS01JP BOS 5K-PU-LX10-S75	
	BOS021T BOS R01E-X-KS20-02				
	R01E	5K	5K	5K	
	20 x 32 x 9 mm	10.8 x 43.5 x 19.5 mm	10.8 x 32.7 x 19.5 mm	10.8 x 43.5 x 19.5 mm	
	—	PNP normally open (NO)	PNP normally open (NO)	PNP normally open/normally closed (NO/NC)	
	—	—	—	—	
	Photoelectric sensor	Photoelectric sensor	Photoelectric sensor	Photoelectric sensor	
	Through-beam sensor	Through-beam sensor	Through-beam sensor	Through-beam sensor	
	—	—	—	—	
	Divergent	Divergent	Divergent	Divergent	
	LED, red light	Infrared	Infrared	Laser red light	
	Ø 3.0 mm Light exit	Ø 90 mm at 2 m	Ø 90 mm at 2 m	Ø 5 mm at 3 m	
	0...2.2 m	0...20 m	0...20 m	0...30 m	
	Cable, 2.00 m, PUR	Connector, M8x1-Male, 4-pin	Cable, 2.00 m, PVC	Connector, M8x1-Male, 4-pin	
	Stainless steel (1.4404)	PC PBT	PC PBT	PC PBT	
	PA	PMMA	PMMA	PMMA	
	10...30 VDC	10...30 VDC	10...30 VDC	10...30 VDC	
	cULus, CE, Ecolab, EAC, WEEE	cULus, CE, EAC, WEEE	cULus, CE, EAC, WEEE	CE, cULus, CDRH, EAC, WEEE	
	—	Global	Global	Global	
	Page 443	Page 443	Page 443	Page 443	

PNP normally open				
PNP normally open, PNP normally closed		**BOS01LW** BOS 6K-PU-LE10-S75		
PNP normally open/normally closed	**BOS01LU** BOS 6K-PU-LE10-S49			
Emitter			**BOS01M1** BOS 6K-XT-LS10-S49	
Series	6K	6K	6K	
Dimension	12 x 41.5 x 21.6 mm	12 x 41.5 x 21.6 mm	12 x 41 x 21.6 mm	
Interface	PNP normally open/normally closed (NO/NC)	PNP normally open/normally closed (NO/NC)	—	
Input function	—	Same function as button, Key disable on/off	—	
Principle of operation	Photoelectric sensor	Photoelectric sensor	Photoelectric sensor	
Principle of optical operation	Through-beam sensor (receiver)	Through-beam sensor (receiver)	Through-beam sensor (Emitter)	
Special optical feature	—	—	—	
Beam characteristic	—	—	Divergent	
Light type	Laser red light	Laser red light	Laser red light	
Light spot size	—	—	14 x 14 mm at 20 m	
Range	0...18 m	0...18 m	0...18 m	
Connection	Connector, M8x1-Male, 3-pin	Connector, M8x1-Male, 4-pin	Connector, M8x1-Male, 3-pin	
Housing material	ABS	ABS	ABS	
Material sensing surface	PMMA	PMMA	PMMA	
Operating voltage Ub	10...30 VDC	10...30 VDC	10...30 VDC	
Approval/Conformity	CE, cULus, EAC, WEEE	cULus, CE, EAC, WEEE	cULus, CE, EAC, WEEE	
Trademark	—	—	—	
Productview	Page 443	Page 443	Page 444	

	BOS00WT BOS 21M-PA-IE10-S4	**BOS00WW** BOS 21M-PA-LE10-S4		
BOS01M2 BOS 6K-XT-LS10-S75			**BOS00WZ** BOS 21M-XT-IS11-S4	**BOS00Y0** BOS 21M-XT-LS11-S4
6K	21M	21M	21M	21M
12 x 41 x 21.6 mm	15 x 50 x 42.5 mm	15 x 50 x 42.5 mm	15 x 50 x 42.5 mm	15 x 50 x 42.5 mm
—	PNP NO PNP NC	PNP NO PNP NC	—	—
—	—	—	Test (Emitter off)	Test (Emitter off)
Photoelectric sensor	Photoelectric sensor	Photoelectric sensor	Photoelectric sensor	Photoelectric sensor
Through-beam sensor (Emitter)	Through-beam sensor (receiver)	Through-beam sensor (receiver)	Through-beam sensor (Emitter)	Through-beam sensor (Emitter)
—	—	—	—	—
Divergent	—	—	—	—
Laser red light	Infrared	Laser red light	Infrared	Laser red light
14 x 14 mm at 20 m	—	—	—	—
0...18 m	0...20 m	0...60 m	0...20 m	0...60 m
Connector, M8x1-Male, 4-pin	Connector, M12x1-Male, 4-pin	Connector, M12x1-Male, 4-pin	Connector, M12x1-Male, 4-pin	Connector, M12x1-Male, 4-pin
ABS	Zinc, Die casting, Powder coated Aluminum	Zinc, Die casting, Powder coated Aluminum	Zinc, Die casting, Powder coated Aluminum	Zinc, Die casting, Powder coated Aluminum
PMMA	PMMA	PMMA	PMMA	PMMA
10...30 VDC	10...30 VDC	10...30 VDC	10...30 VDC	10...30 VDC
cULus, CE, EAC, WEEE	CE, cULus, EAC, WEEE	CE, cULus, EAC, WEEE	CE, cULus, EAC, WEEE	CE, cULus, EAC, WEEE
—	—	—	—	—
Page 444	Page 444	Page 444	Page 444	Page 444

PNP normally open, PNP normally closed			**BOS01FU** BOS 23K-PA-LE10-S4	
PNP normally open/normally closed			**BOS016L** BOS 23K-PU-LE10-S4	
PNP normally open/normally closed, IO-Link 1.1	**BOS027R** BOS 21M-PAI-RE30-S4	**BOS027P** BOS 21M-XI-RS31-S4		
Emitter				
Series	21M	21M	23K	
Dimension	15.4 x 51.1 x 42.7 mm	15.4 x 51.1 x 42.7 mm	23 x 51 x 52.4 mm	
Interface	IO-Link 1.1 Normally open (NO) Normally closed (NC)	IO-Link 1.1	PNP NO PNP NC	
Input function	—	Test (Emitter off)	Same function as button, Key disable on/off	
Principle of operation	Photoelectric sensor	Photoelectric sensor	Photoelectric sensor	
Principle of optical operation	Through-beam sensor (receiver)	Through-beam sensor (Emitter)	Through-beam sensor (receiver)	
Special optical feature	—	—	—	
Beam characteristic	—	—	—	
Light type	Red light	LED, red light	Laser red light	
Light spot size	—	—	—	
Range	0...20 m	0...20 m	0...30 m	
Connection	Connector, M12x1-Male, 4-pin	Connector, M12x1-Male, 4-pin	Connector, M12x1-Male, 4-pin	
Housing material	Zinc, Die casting, Powder coated Die-cast zinc	Zinc, Die casting, Powder coated Die-cast zinc	PC ABS	
Material sensing surface	PMMA	PMMA	PMMA	
Operating voltage Ub	10...30 VDC	10...30 VDC	10...30 VDC	
Approval/Conformity	CE, cULus, WEEE, EAC, Ecolab	CE, cULus, WEEE, EAC, Ecolab	Ecolab, CE, cULus, EAC, WEEE	
Trademark	—	—	—	
Productview	Page 444	Page 444	Page 444	

BOS01FP BOS 23K-PA-RE10-S4				**BOS01CK** BOS 50K-PA-RE10-S4
	BOS016F BOS 23K-PU-RE10-S4			
		BOS016K BOS 23K-XT-LS11-S4	**BOS016E** BOS 23K-XT-RS11-S4	
23K	23K	23K	23K	50K
23 x 51 x 52.4 mm	23 x 51 x 52.4 mm	23 x 51 x 52.4 mm	23 x 51 x 52.4 mm	28.5 x 80.5 x 62 mm
PNP NO PNP NC	PNP normally open/normally closed (NO/NC)	—	—	PNP NO PNP NC
—	Same function as button, Key disable on/off	Test (Emitter off)	Test (Emitter off)	—
Photoelectric sensor	Photoelectric sensor	Photoelectric sensor	Photoelectric sensor	Photoelectric sensor
Through-beam sensor (receiver)	Through-beam sensor (receiver)	Through-beam sensor (Emitter)	Through-beam sensor (Emitter)	Through-beam sensor (receiver)
—	—	—	—	—
—	—	Divergent	Divergent	—
LED, red light	LED, red light	Laser red light	LED, red light	LED, red light
—	—	30 x 30 mm at 25 m	600 x 600 mm at 20 m	—
0...25 m	0...25 m	0...30 m	0...25 m	0...60 m
Connector, M12x1-Male, 4-pin	Connector, M12x1-Male, 4-pin	Connector, M12x1-Male, 4-pin	Connector, M12x1-Male, 4-pin	Connector, M12x1-Male, 4-pin
PC ABS	PC ABS	PC ABS	PC ABS	PC ABS
PMMA	PMMA	PMMA	PMMA	Glass
10...30 VDC	10...30 VDC	10...30 VDC	10...30 VDC	10...30 VDC
Ecolab, CE, cULus, EAC, WEEE	CE, Ecolab, cULus, EAC, WEEE	CE, cULus, Ecolab, EAC, WEEE	CE, Ecolab, cULus, EAC, WEEE	CE, cULus, EAC, WEEE
—	—	—	—	—
Page 444	Page 444	Page 444	Page 444	Page 445

Relay normally open/normally closed		**BOS01K4** BOS 64K-AA-IE10-TG		
Emitter	**BOS01CN** BOS 50K-XT-RS10-S4		**BOS01K5** BOS 64K-AA-IS10-TG	
Series	50K	64K	64K	
Dimension	28.5 x 80.5 x 62 mm	25 x 69.7 x 100.4 mm	25 x 69.7 x 100.4 mm	
Interface	—	Relay normally open/normally closed (NO/NC)	—	
Input function	Test (Emitter off)	—	—	
Principle of operation	Photoelectric sensor	Photoelectric sensor	Photoelectric sensor	
Principle of optical operation	Through-beam sensor (Emitter)	Through-beam sensor (receiver)	Through-beam sensor (Emitter)	
Special optical feature	—	—	—	
Beam characteristic	Divergent	—	Divergent	
Light type	LED, red light	Infrared	Infrared	
Light spot size	200 x 200 mm at 10 m	—	—	
Range	0...60 m	0...50 m	0...50 m	
Connection	Connector, M12x1-Male, 4-pin	Screw terminals	Screw terminals	
Housing material	PC ABS	PBT, GF30	PBT, GF30	
Material sensing surface	Glass	PC	PC	
Operating voltage Ub	10...30 VDC	24...60 VDC/24...240 VAC	24...60 VDC/24...240 VAC	
Approval/Conformity	CE, cULus, EAC, WEEE	cULus, CE, EAC, WEEE	cULus, CE, EAC, WEEE	
Trademark	—	—	—	
Productview	Page 445	Page 445	Page 445	

Do you need more details? Our Product Finder at www.balluff.com provides you with product-specific information, including technical drawings, data sheets, user guides and more for each individual product. All items are available for download.

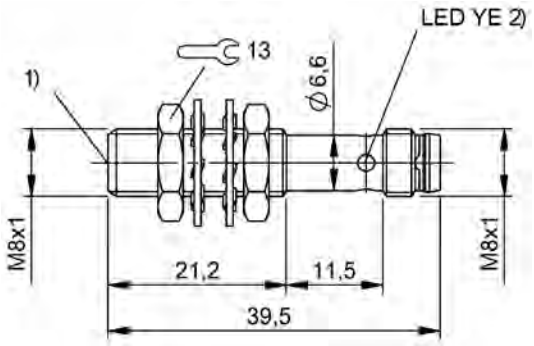

1) Optical axis, 2) Output function

BOS01U3

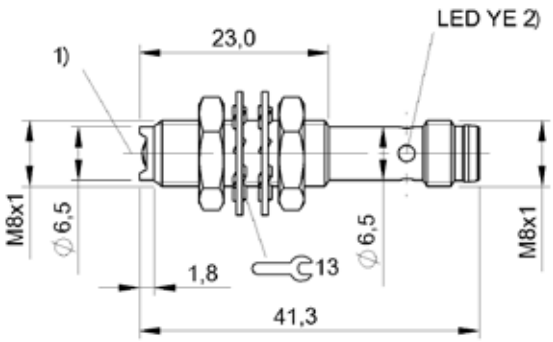

1) Optical axis, 2) Output function

BOS020A, BOS020F, BOS01Z5

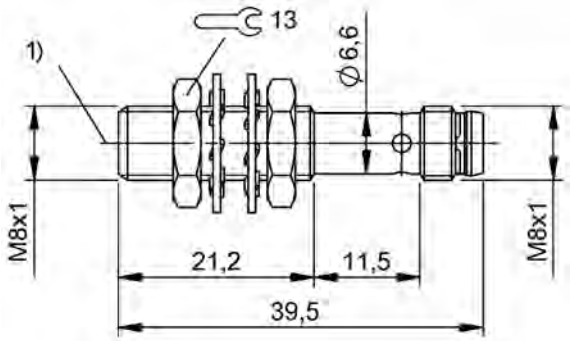

1) Optical axis

BOS01U8

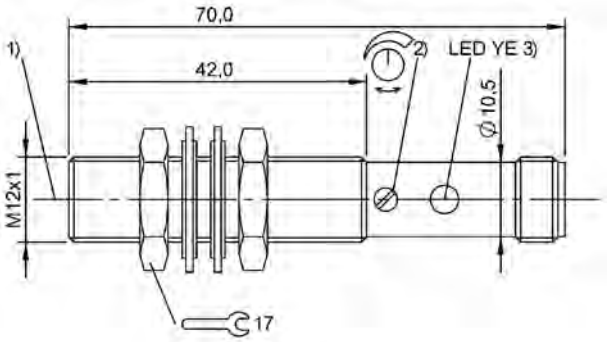

1) Optical axis, 2) Sn, 3) Output function

BOS00WF

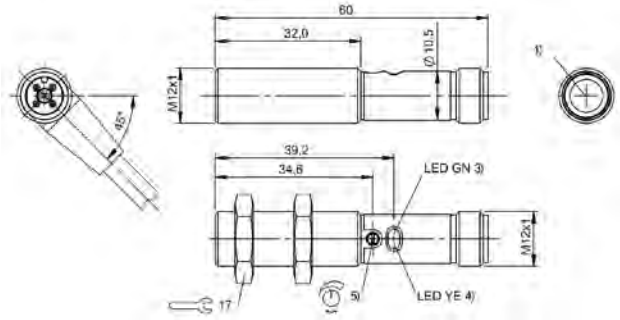

1) Optical axis receiver, 3) Operating voltage, 4) Light reception/limit area, 5) Sn

BOS01TY

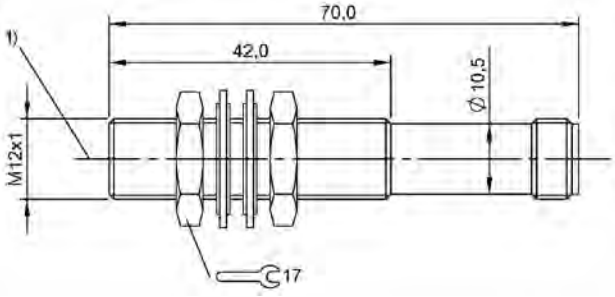

1) Optical axis

BOS00WH, BOS00WJ, BOS00WL, BOS00WN

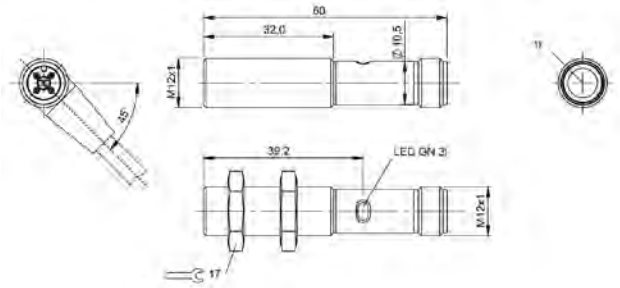

1) Optical axis emitter, 3) Operating voltage

BOS01TW

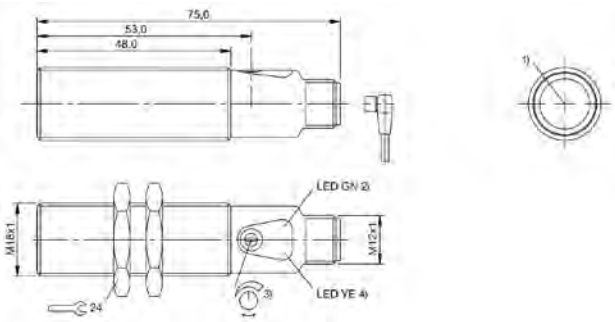

1) Optical axis, 2) Operating voltage/Error, 3) Sn, 4) Light reception/limit area

BOS01NJ

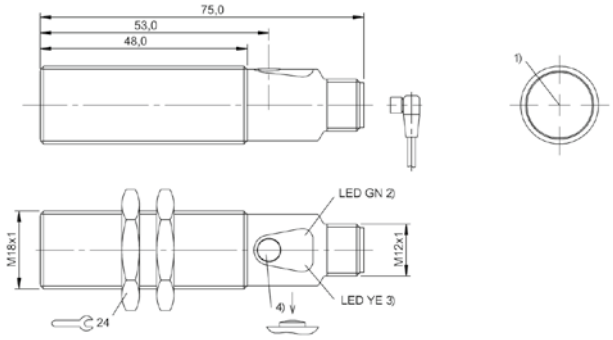

1) Optical axis, 2) Power/short-circuit, 3) Light reception/limit area, 4) Sn

BOS01UC, BOS01J7

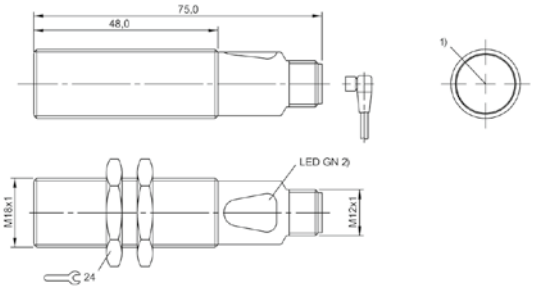

1) Optical axis, 2) Operating voltage

BOS01NH, BOS01CY, BOS01UF

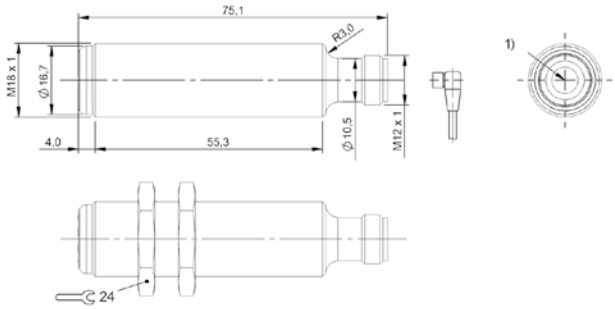

1) Optical axis receiver

BOS01KM, BOS023W, BOS023H

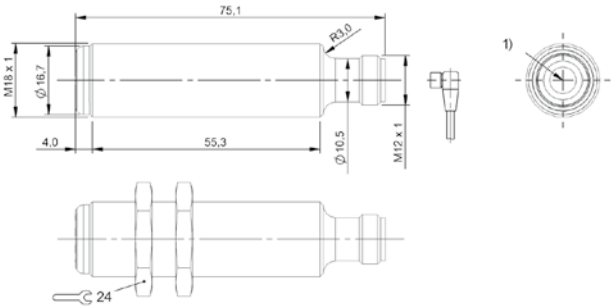

1) Optical axis emitter

BOS01KT, BOS023U, BOS023J

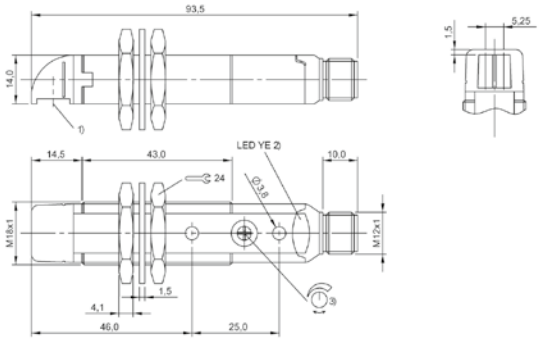

1) Output function, 1) Optical axis, 3) Sn

BOS00CT

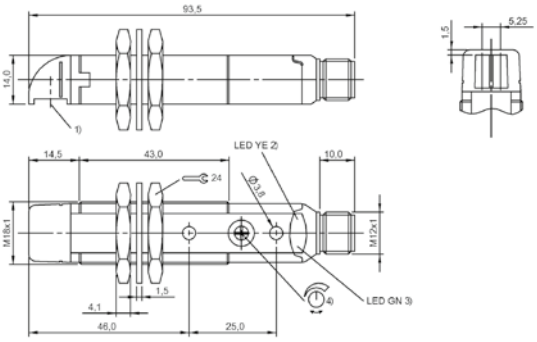

1) Optical axis, 2) Output function, 3) Stability, 4) Sn

BOS00CW

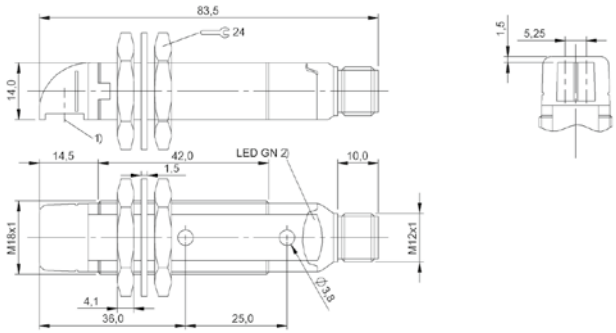

1) Optical axis, 2) Operating voltage

BOS00EW, BOS00ET

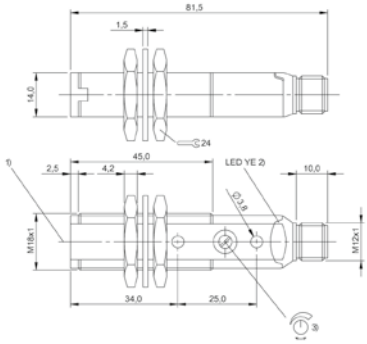

1) Optical axis, 2) Output function, 3) Sn

BOS00CH

Do you need more details? Our Product Finder at www.balluff.com provides you with product-specific information, including technical drawings, data sheets, user guides and more for each individual product. All items are available for download.

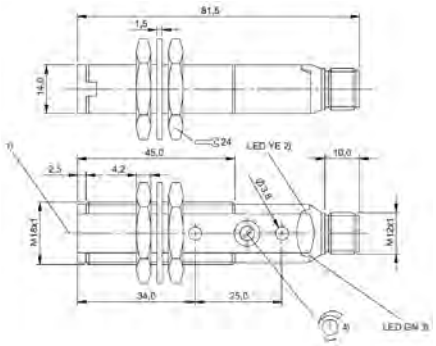

1) Optical axis, 2) Output function, 3) Stability, 4) Sn

BOS00CK

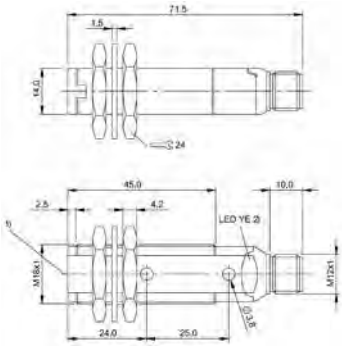

1) Optical axis, 2) Operating voltage

BOS00EP, BOS00EM

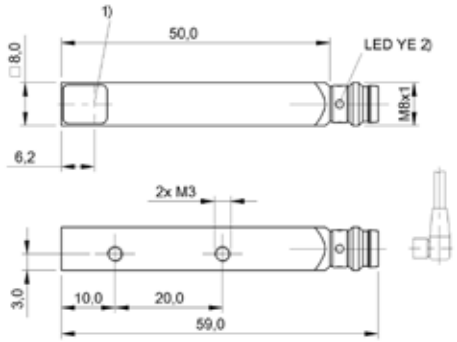

1) Optical axis receiver, 2) Output function

BOS01Y7, BOS01Y4

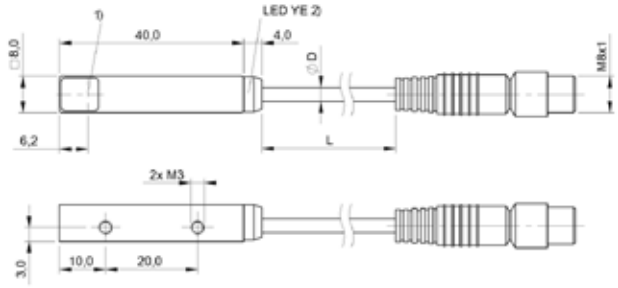

1) Optical axis receiver, 2) Output function

BOS01Y6

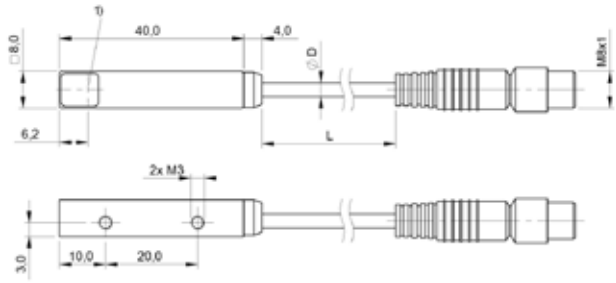

1) Optical axis emitter

BOS01YM

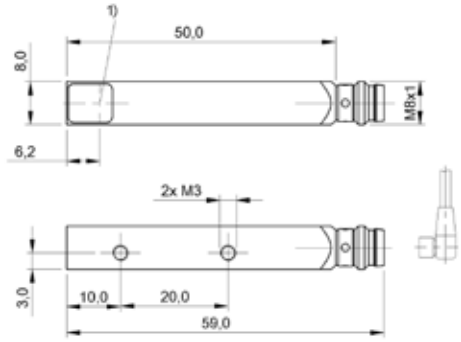

1) Optical axis emitter

BOS01YK

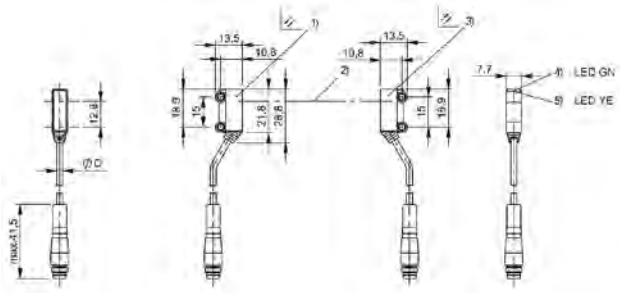

1) Emitter, 2) Optical axis, 3) Receiver, 4) Operating voltage, 5) Output function

BOS0214

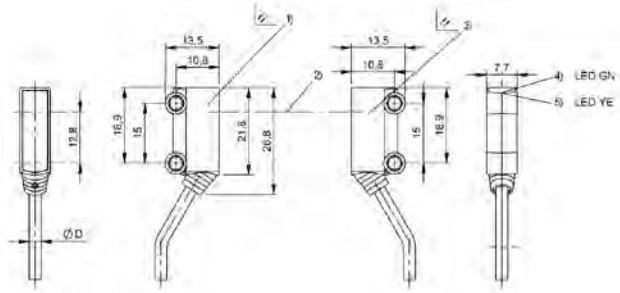

1) Emitter, 2) Optical axis, 3) Receiver, 4) Operating voltage, 5) Output function

BOS0211

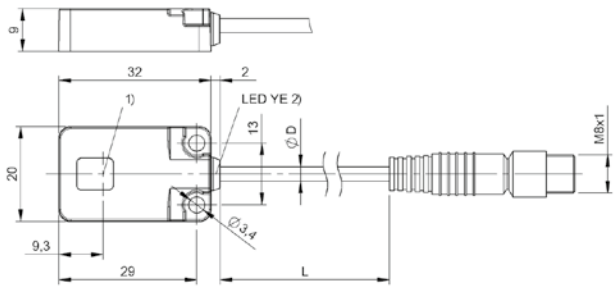

1) Optical axis receiver, 2) Output function

BOS021N

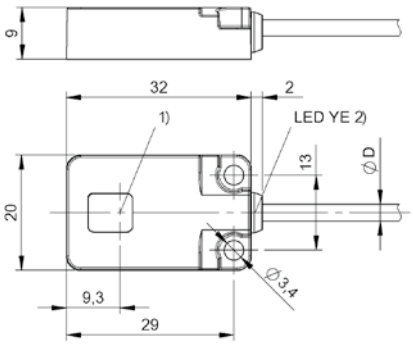

1) Optical axis receiver, 2) Output function

BOS021P

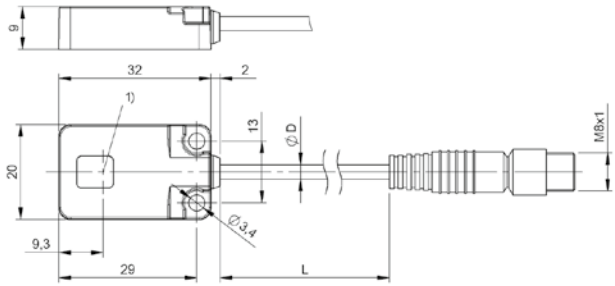

1) Optical axis emitter

BOS021R

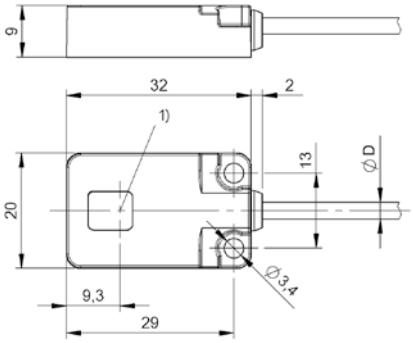

1) Optical axis emitter

BOS021T

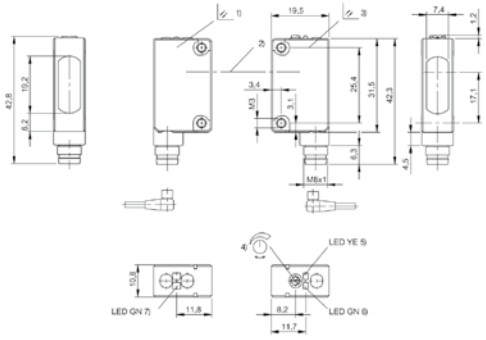

1) Emitter, 2) Optical axis, 3) Receiver, 4) Sensitivity, 5) Output function, 6) stability, 7) Operating voltage

BOS011R, BOS0126

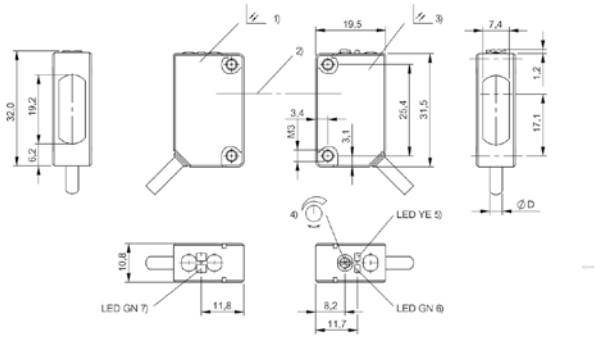

1) Emitter, 2) Optical axis, 3) Receiver, 4) Sensitivity, 5) Output function, 6) stability, 7) Operating voltage

BOS0125

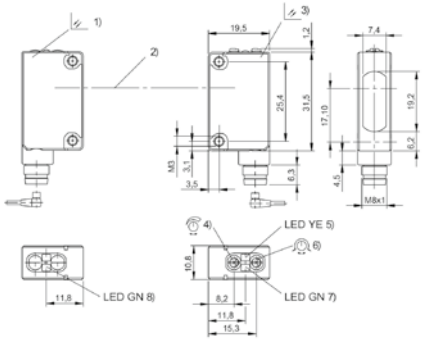

1) Emitter, 2) Optical axis, 3) Receiver, 4) Sensitivity, 5) Output function, 6) Light-on/dark-on, 7) stability, 8) Operating voltage

BOS01JP

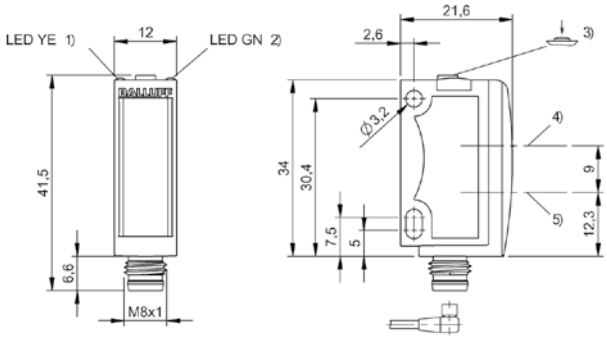

1) Output function, 2) Operating voltage, 3) Sensitivity, light/dark, 4) Optical axis

BOS01LU, BOS01LW

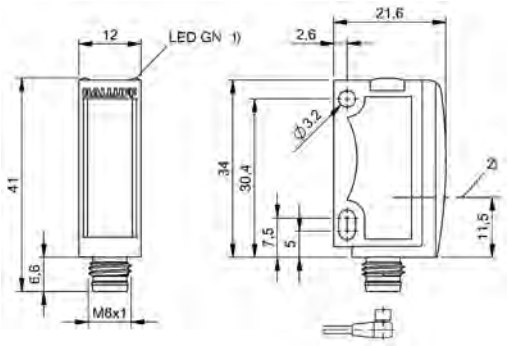

1) Operating voltage, 2) Optical axis

BOS01M1, BOS01M2

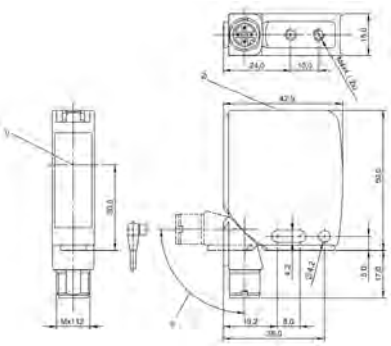

1) Optical axis, 2) Display and control panel, 3) rotatable 270°

BOS00WT, BOS00WW

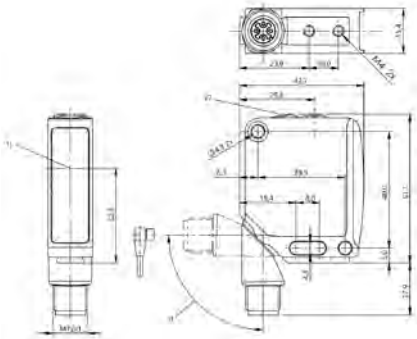

1) Optical axis receiver, 2) Display and control panel, 3) 240° rotatable

BOS027R

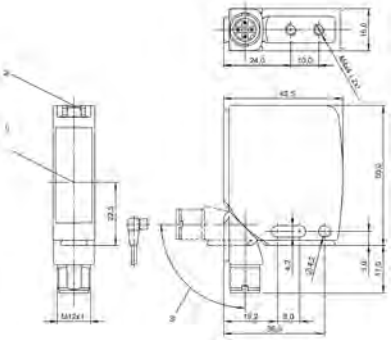

1) Optical axis, 2) Operating voltage, 3) rotatable 270°

BOS00WZ, BOS00Y0

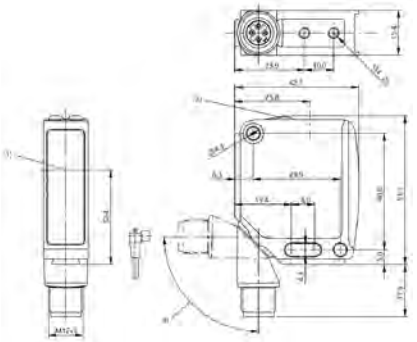

1) Optical axis emitter, 2) Display and control panel, 3) 240° rotatable

BOS027P

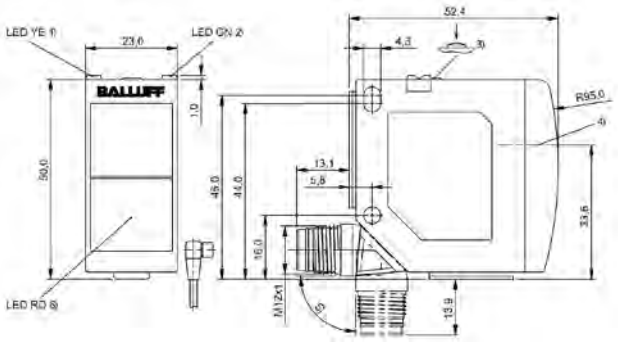

1) Output function/Error, 2) Power/setting mode, 3) Sn, light/dark, 4) Optical axis, 5) rotatable 270°, 6) Alignment good/limit area

BOS01FU, BOS016L, BOS016F

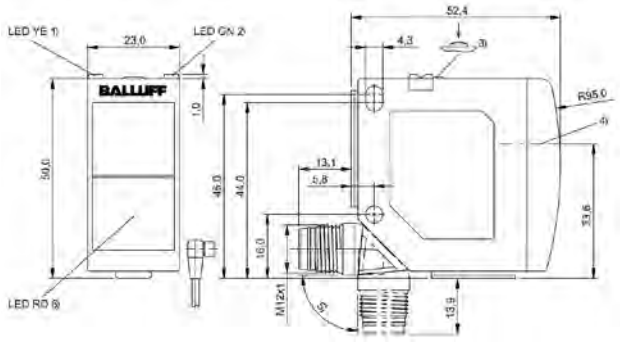

1) Output function/Error, 2) Operating voltage, 3) Sn, light/dark, 4) Optical axis, 5) rotatable 270°, 6) Alignment good/limit area

BOS01FP

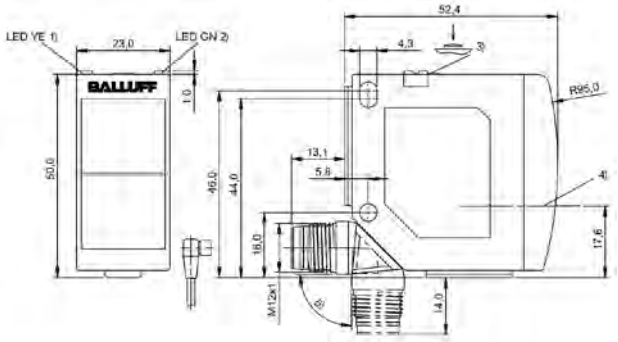

1) Alignment mode active, 2) Power/alignment mode active, 3) Alignment mode on/off, 4) Optical axis, 5) rotatable 270°

BOS016K, BOS016E

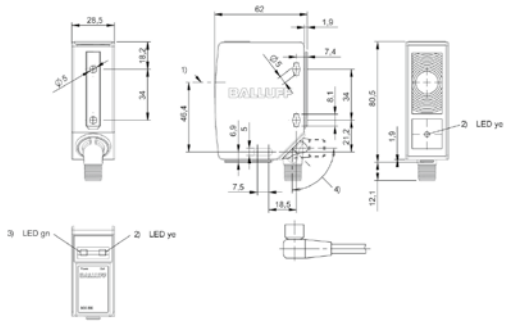

1) Optical axis receiver, 2) Light reception, 3) Operating voltage, 4) rotatable 270°

BOS01CK

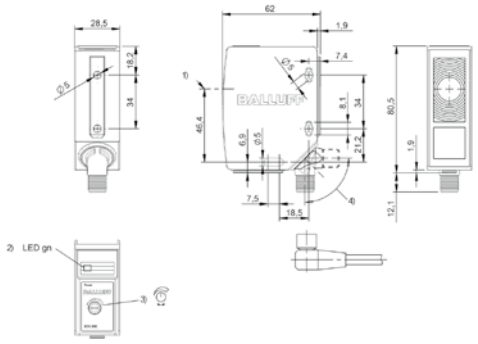

1) Optical axis emitter, 2) Operating voltage, 3) Sn, 4) rotatable 270°

BOS01CN

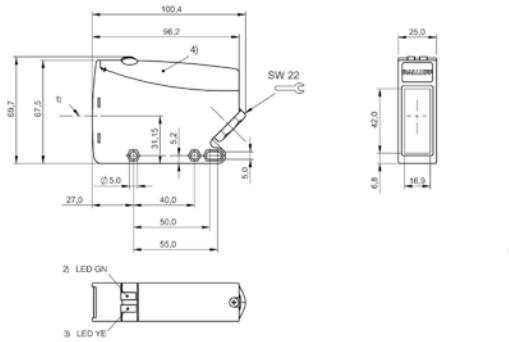

1) Optical axis, 2) Stability, 3) Output function, 4) Removable cover

BOS01K4

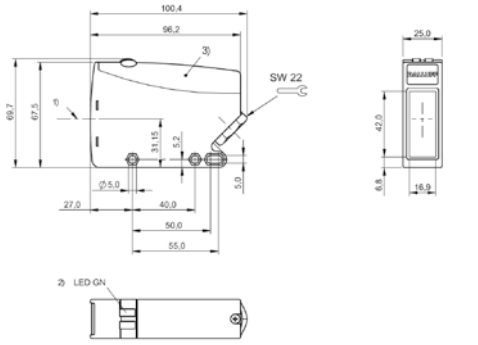

1) Optical axis, 2) Operating voltage, 3) Removable cover

BOS01K5

Through-beam sensor BOS 5K-_ _-IX10-_ _

Receiving characteristics

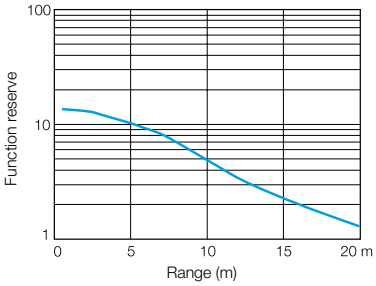

Characteristic response curve

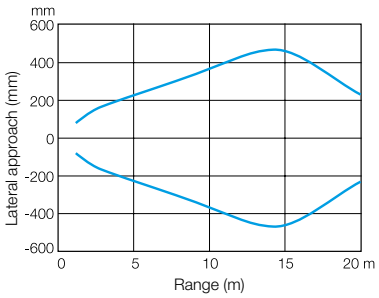

Angular Offset

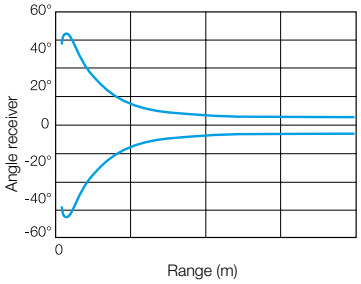

Through-beam sensor BLE/BLS 12M-...

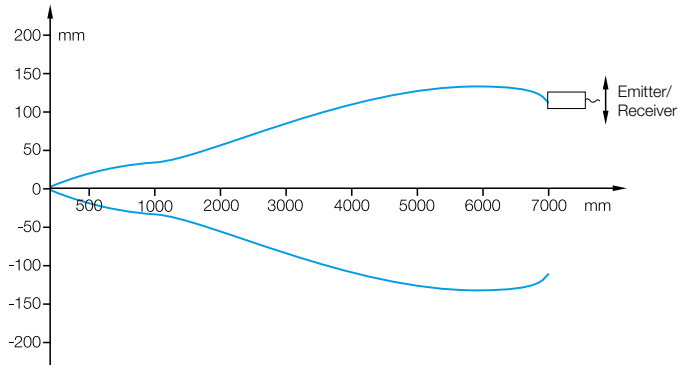

The maximum possible offset between the emitter and receiver is measured for the through-beam sensor.

Through-beam sensor small parts detection BOS 12M-XT-LS11-..

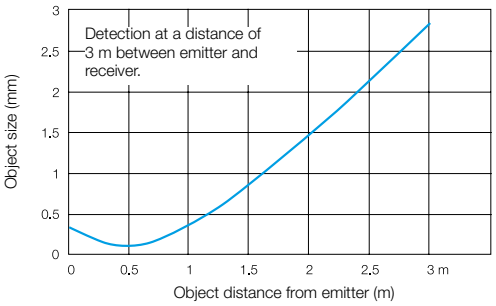

Through-beam sensor small parts detection BOS 12M-XT-LS12-..

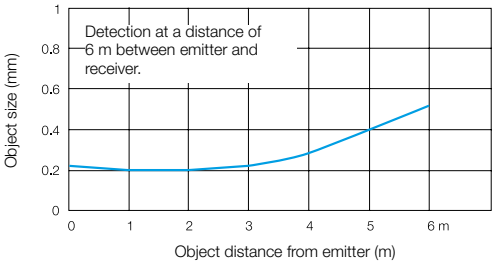

Through-beam sensor small parts detection BOS 12M-XT-LS12-..

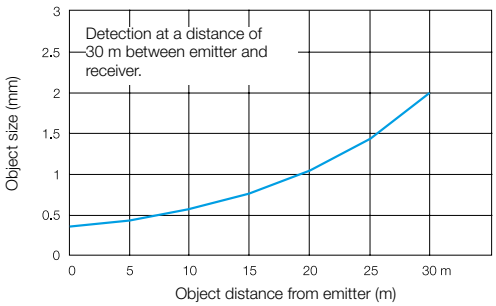

Accuracy diagram for BOS 18M laser through-beam sensor
Smallest detectable part size as a function of range.

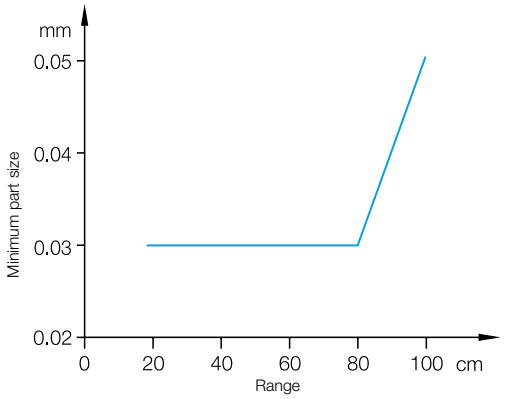

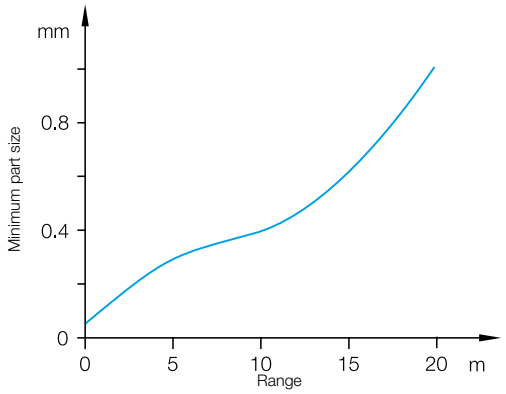

Light spot perpendicular to transport direction of the object.

Through-beam sensor BOS 18M...RE/RS20
Response curve

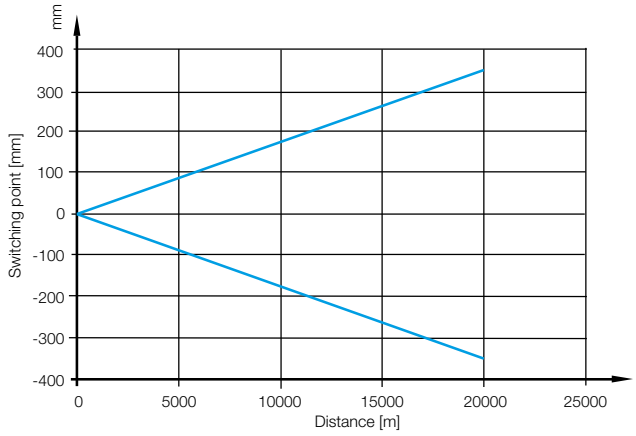

Through-beam sensor BOS 18M...RE/RS20
Function reserve

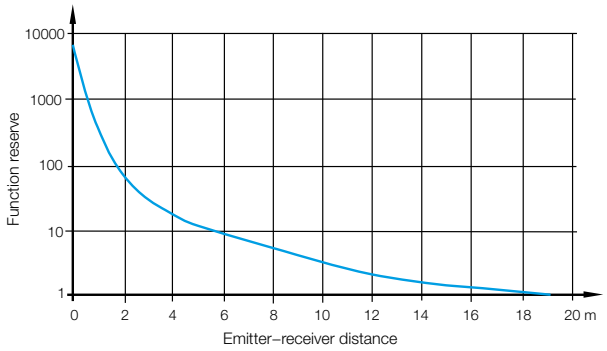

Through-beam sensor BOS 18M...RE/RS23
response curve

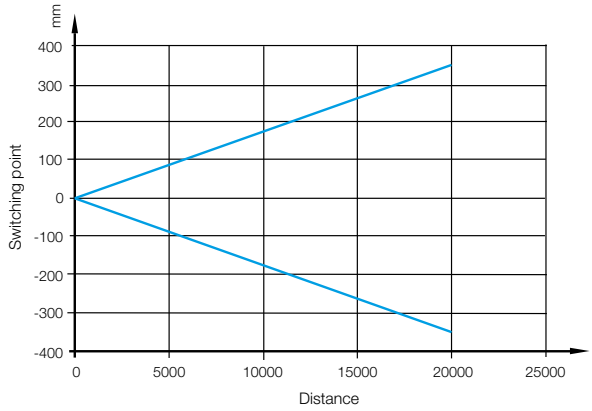

Through-beam sensor BOS 18M...RE/RS23
Function reserve

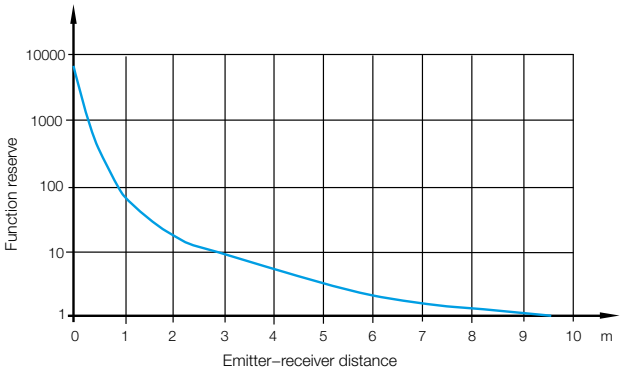

Do you need more details? Our Product Finder at www.balluff.com provides you with product-specific information, including technical drawings, data sheets, user guides and more for each individual product. All items are available for download.

Through-beam sensor BOS 18M-..-LE/LS10-...

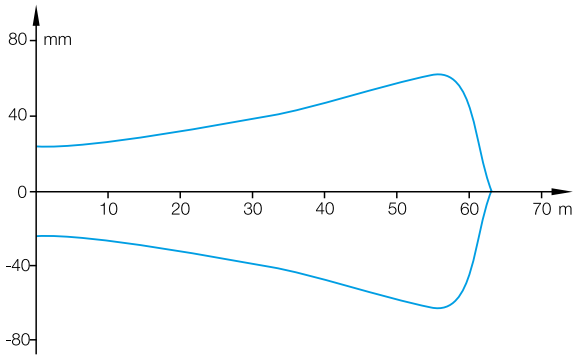

Detection range

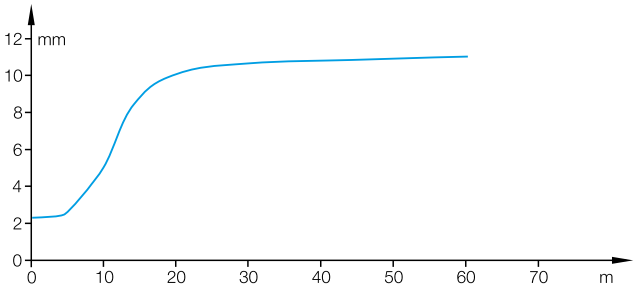

Resolution

Through-beam sensor BOS 18MR-..-LE/LS10-...

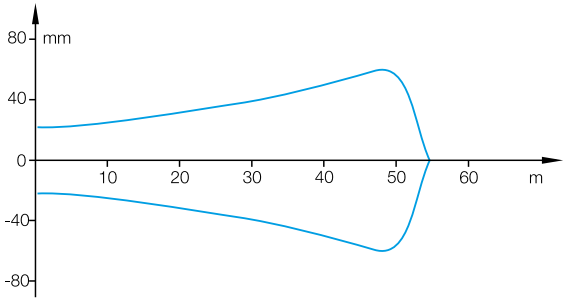

Detection range

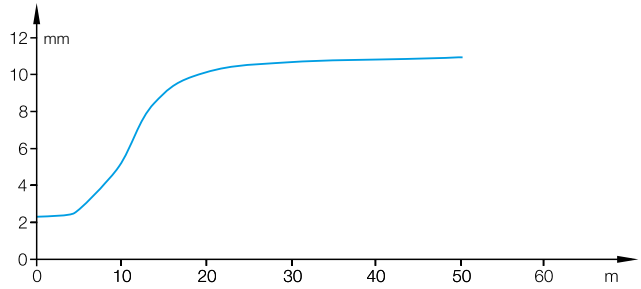

Resolution

Through-beam BLE/BLS 18E-...

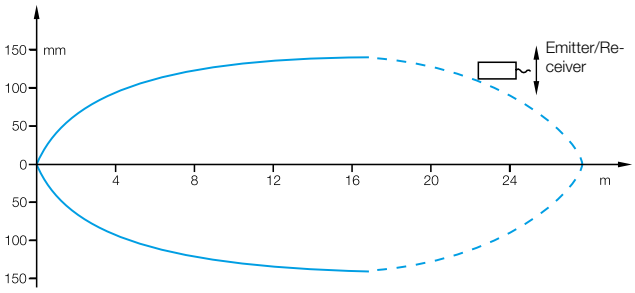

For a through-beam sensor, the maximum possible offset between the emitter and receiver is measured.

Through-beam sensor BLE/BLS 18KF-..-1LT-...

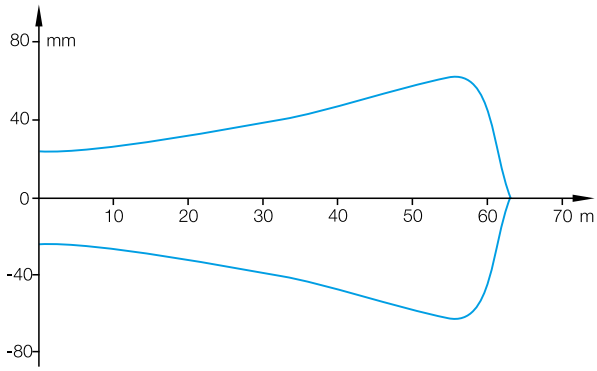

Detection range

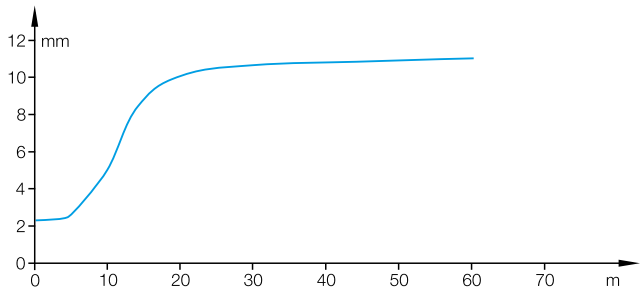

Resolution

Through-beam sensor BLE/BLS 18KW-..-1LT-...

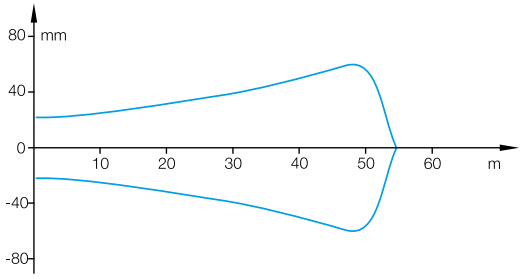

Detection range

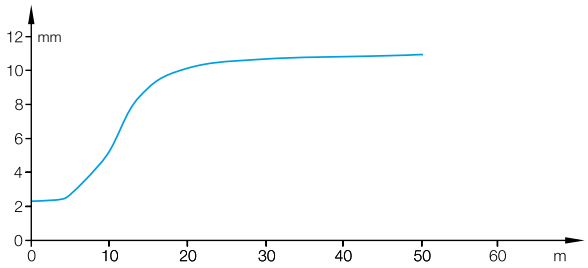

Resolution

Through-beam BLE/BLS 18KW-..-1PP/1P-...

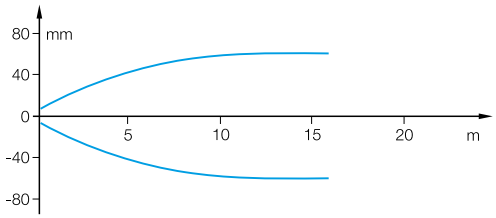

Detection range

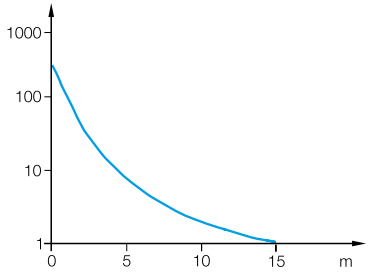

Function reserve

PNP normally open/normally closed			BGL0021 BGL 5A-007-S49	
PNP normally open/normally closed, NPN normally open/normally closed	BGL002L BGL 21-IR	BGL002M BGL 21-RG		
Series	21	21	A	
Dimension	20 x 26 x 90 mm	20 x 26 x 90 mm	10 x 25 x 54 mm	
Fork opening	2 mm	2 mm	5 mm	
Principle of operation	Fork sensor	Fork sensor	Fork sensor	
Principle of optical operation	Through-beam sensor	Through-beam sensor	Through-beam sensor	
Special optical feature	—	—	—	
Beam characteristic	Divergent	Divergent	Divergent	
Light type	Infrared	green light/red light	Infrared	
Light spot size	0.5 x 4 mm Light exit	0.5 x 4 mm Light exit	Ø 2.0 mm Light exit	
Connection	Connector, M8x1 connector, 4-pin	Connector, M8x1 connector, 4-pin	Connector, M8x1 connector, 3-pin	
Housing material	Aluminum	Aluminum	Zinc, die-cast	
Material sensing surface	Glass	Glass	Glass	
Operating voltage Ub	10...30 VDC	10...30 VDC	10...30 VDC	
Approval/Conformity	CE	CE	CE, cULus, EAC	
Trademark	—	—	—	
Productview	Page 462	Page 462	Page 462	

	BGL0005 BGL 10A-007-S49	BGL000Y BGL 20A-007-S49	BGL001F BGL 30A-007-S49	BGL003J BGL 30A-011-S49	BGL001T BGL 50A-007-S49
	A	A	A	A	A
	10 x 30 x 54 mm	10 x 40 x 58 mm	10 x 50 x 68 mm	10 x 50 x 68 mm	10 x 70 x 88 mm
	10 mm	20 mm	30 mm	30 mm	50 mm
	Fork sensor	Fork sensor	Fork sensor	Fork sensor	Fork sensor
	Through-beam sensor	Through-beam sensor	Through-beam sensor	Through-beam sensor	Through-beam sensor
	—	—	—	Water detection	—
	Divergent	Divergent	Divergent	Divergent	Divergent
	Infrared	Infrared	Infrared	Infrared	Infrared
	Ø 2.0 mm Light exit	Ø 2.0 mm Light exit	Ø 2.5 mm Light exit	Ø 2.5 mm Light exit	Ø 2.5 mm Light exit
	Connector, M8x1 connector, 3-pin	Connector, M8x1 connector, 3-pin	Connector, M8x1 connector, 3-pin	Connector, M8x1 connector, 3-pin	Connector, M8x1 connector, 3-pin
	Zinc, die-cast	Zinc, die-cast	Zinc, die-cast	Zinc, die-cast	Zinc, die-cast
	Glass	Glass	Glass	Glass	Glass
	10...30 VDC	10...30 VDC	10...30 VDC	10...30 VDC	10...30 VDC
	CE, cULus, EAC	CE, cULus, EAC	CE, cULus, EAC	CE, EAC	CE, cULus, EAC
	—	—	—	—	—
	Page 463	Page 463	Page 464	Page 464	Page 464

PNP normally open/normally closed	**BGL0029** BGL 80A-007-S49	**BGL003L** BGL 80A-011-S49	**BGL000F** BGL 120A-007-S49	
Series	A	A	A	
Dimension	10 x 100 x 88 mm	10 x 100 x 88 mm	10 x 140 x 93 mm	
Fork opening	80 mm	80 mm	120 mm	
Principle of operation	Fork sensor	Fork sensor	Fork sensor	
Principle of optical operation	Through-beam sensor	Through-beam sensor	Through-beam sensor	
Special optical feature	—	Water detection	—	
Beam characteristic	Divergent	Divergent	Divergent	
Light type	Infrared	Infrared	Infrared	
Light spot size	Ø 2.5 mm Light exit	Ø 2.5 mm Light exit	Ø 2.5 mm Light exit	
Connection	Connector, M8x1 connector, 3-pin	Connector, M8x1 connector, 3-pin	Connector, M8x1 connector, 3-pin	
Housing material	Zinc, die-cast	Zinc, die-cast	Zinc, die-cast	
Material sensing surface	Glass	Glass	Glass	
Operating voltage Ub	10...30 VDC	10...30 VDC	10...30 VDC	
Approval/Conformity	CE, cULus, EAC	CE, EAC	CE, cULus, EAC	
Trademark	—	—	—	
Productview	Page 465	Page 465	Page 465	

	BGL000N BGL 180A-007-S49	BGL0014 BGL 220A-007-S49	BGL0019 BGL 30A-003-S49	BGL001M BGL 50A-003-S49	BGL0025 BGL 80A-003-S49
	A	A	A	A	A
	10 x 200 x 153 mm	10 x 240 x 153 mm	10 x 50 x 68 mm	10 x 70 x 88 mm	10 x 100 x 88 mm
	180 mm	220 mm	30 mm	50 mm	80 mm
	Fork sensor	Fork sensor	Fork sensor	Fork sensor	Fork sensor
	Through-beam sensor	Through-beam sensor	Through-beam sensor	Through-beam sensor	Through-beam sensor
	–	–	–	–	–
	Divergent	Divergent	Collimated	Collimated	Collimated
	Infrared	Infrared	Laser red light	Laser red light	Laser red light
	Ø 2.5 mm Light exit	Ø 2.5 mm Light exit	Ø 0.3 mm Light exit	Ø 0.3 mm Light exit	Ø 0.3 mm Light exit
	Connector, M8x1 connector, 3-pin	Connector, M8x1 connector, 3-pin	Connector, M8x1 connector, 3-pin	Connector, M8x1 connector, 3-pin	Connector, M8x1 connector, 3-pin
	Zinc, die-cast	Zinc, die-cast	Zinc, die-cast	Zinc, die-cast	Zinc, die-cast
	Glass	Glass	Glass	Glass	Glass
	10...30 VDC	10...30 VDC	10...30 VDC	10...30 VDC	10...30 VDC
	CE, cULus, EAC	CE, cULus, EAC	CE, cULus, EAC	CE, cULus, EAC	CE, cULus, EAC
	–	–	–	–	–
	Page 466	Page 466	Page 467	Page 467	Page 468

Do you need more details? Our Product Finder at www.balluff.com provides you with product-specific information, including technical drawings, data sheets, user guides and more for each individual product. All items are available for download.

PNP normally open/normally closed	**BGL0009** BGL 120A-003-S49	**BGL001Z** BGL 5A-005-S49	**BGL0003** BGL 10A-005-S49	
Series	A	A	A	
Dimension	10 x 140 x 93 mm	10 x 25 x 54 mm	10 x 30 x 54 mm	
Fork opening	120 mm	5 mm	10 mm	
Principle of operation	Fork sensor	Fork sensor	Fork sensor	
Principle of optical operation	Through-beam sensor	Through-beam sensor	Through-beam sensor	
Special optical feature	—	—	—	
Beam characteristic	Collimated	Divergent	Divergent	
Light type	Laser red light	Red light	Red light	
Light spot size	Ø 0.3 mm Light exit	Ø 1.0 mm Light exit	Ø 1.0 mm Light exit	
Connection	Connector, M8x1 connec-tor, 3-pin	Connector, M8x1 connec-tor, 3-pin	Connector, M8x1 connec-tor, 3-pin	
Housing material	Zinc, die-cast	Zinc, die-cast	Zinc, die-cast	
Material sensing surface	Glass	Glass	Glass	
Operating voltage Ub	10...30 VDC	10...30 VDC	10...30 VDC	
Approval/Conformity	CE, cULus, EAC	cULus, CE, EAC	cULus, CE, EAC	
Trademark	—	—	—	
Productview	Page 468	Page 469	Page 469	

	BGL000U BGL 20A-005-S49	BGL001C BGL 30A-005-S49	BGL001P BGL 50A-005-S49	BGL0027 BGL 80A-005-S49	BGL000C BGL 120A-005-S49
	A	A	A	A	A
	10 x 40 x 58 mm	10 x 50 x 68 mm	10 x 70 x 88 mm	10 x 100 x 88 mm	10 x 140 x 93 mm
	20 mm	30 mm	50 mm	80 mm	120 mm
	Fork sensor	Fork sensor	Fork sensor	Fork sensor	Fork sensor
	Through-beam sensor	Through-beam sensor	Through-beam sensor	Through-beam sensor	Through-beam sensor
	–	–	–	–	–
	Divergent	Divergent	Divergent	Divergent	Divergent
	Red light	Red light	Red light	Red light	Red light
	Ø 1.0 mm Light exit	Ø 1.0 mm Light exit	Ø 1.5 mm Light exit	Ø 2.0 mm Light exit	Ø 2.5 mm Light exit
	Connector, M8x1 connector, 3-pin	Connector, M8x1 connector, 3-pin	Connector, M8x1 connector, 3-pin	Connector, M8x1 connector, 3-pin	Connector, M8x1 connector, 3-pin
	Zinc, die-cast	Zinc, die-cast	Zinc, die-cast	Zinc, die-cast	Zinc, die-cast
	Glass	Glass	Glass	Glass	Glass
	10...30 VDC	10...30 VDC	10...30 VDC	10...30 VDC	10...30 VDC
	cULus, CE, EAC	cULus, CE, EAC	cULus, CE, EAC	cULus, CE, EAC	cULus, CE, EAC
	–	–	–	–	–
	Page 470	Page 467	Page 467	Page 468	Page 468

PNP normally open/normally closed	**BGL000L** BGL 180A-005-S49	**BGL0012** BGL 220A-005-S49	**BGL001W** BGL 5A-001-S49	
Series	A	A	A	
Dimension	10 x 200 x 153 mm	10 x 240 x 153 mm	10 x 25 x 54 mm	
Fork opening	180 mm	220 mm	5 mm	
Principle of operation	Fork sensor	Fork sensor	Fork sensor	
Principle of optical operation	Through-beam sensor	Through-beam sensor	Through-beam sensor	
Special optical feature	—	—	—	
Beam characteristic	Divergent	Divergent	Divergent	
Light type	Red light	Red light	LED, red light	
Light spot size	Ø 2.5 mm Light exit	Ø 2.5 mm Light exit	Ø 1.0 mm Light exit	
Connection	Connector, M8x1 connec-tor, 3-pin	Connector, M8x1 connec-tor, 3-pin	Connector, M8x1 connec-tor, 3-pin	
Housing material	Zinc, die-cast	Zinc, die-cast	Zinc, die-cast	
Material sensing surface	Glass	Glass	Glass	
Operating voltage Ub	10...30 VDC	10...30 VDC	10...30 VDC	
Approval/Conformity	cULus, CE, EAC	cULus, CE, EAC	CE, cULus, EAC	
Trademark	—	—	Global	
Productview	Page 470	Page 471	Page 469	

	BGL0001 BGL 10A-001-S49	BGL000R BGL 20A-001-S49	BGL0016 BGL 30A-001-S49	BGL001J BGL 50A-001-S49	BGL0023 BGL 80A-001-S49
	A	A	A	A	A
	10 x 30 x 54 mm	10 x 40 x 58 mm	10 x 50 x 68 mm	10 x 70 x 88 mm	10 x 100 x 88 mm
	10 mm	20 mm	30 mm	50 mm	80 mm
	Fork sensor	Fork sensor	Fork sensor	Fork sensor	Fork sensor
	Through-beam sensor	Through-beam sensor	Through-beam sensor	Through-beam sensor	Through-beam sensor
	–	–	–	–	–
	Divergent	Divergent	Divergent	Divergent	Divergent
	LED, red light	LED, red light	LED, red light	LED, red light	LED, red light
	Ø 1.2 mm Light exit	Ø 1.0 mm Light exit	Ø 1.2 mm Light exit	Ø 1.5 mm Light exit	Ø 2.0 mm Light exit
	Connector, M8x1 connector, 3-pin	Connector, M8x1 connector, 3-pin	Connector, M8x1 connector, 3-pin	Connector, M8x1 connector, 3-pin	Connector, M8x1 connector, 3-pin
	Zinc, die-cast	Zinc, die-cast	Zinc, die-cast	Zinc, die-cast	Zinc, die-cast
	Glass	Glass	Glass	Glass	Glass
	10...30 VDC	10...30 VDC	10...30 VDC	10...30 VDC	10...30 VDC
	CE, cULus, EAC	CE, cULus, EAC	CE, cULus, EAC	CE, cULus, EAC	CE, cULus, EAC
	Global	Global	Global	Global	Global
	Page 469	Page 470	Page 467	Page 467	Page 468

IO-Link, normally open/normally closed				
PNP normally open/normally closed	**BGL0007** BGL 120A-001-S49	**BGL000J** BGL 180A-001-S49	**BGL0010** BGL 220A-001-S49	
PNP normally open/normally closed, analog, voltage 0...10 V				
PNP normally open/normally closed, analog, current 4...20 mA				
Series	A	A	A	
Dimension	10 x 140 x 93 mm	10 x 200 x 153 mm	10 x 25 x 54 mm	
Fork opening	120 mm	180 mm	220 mm	
Principle of operation	Fork sensor	Fork sensor	Fork sensor	
Principle of optical operation	Through-beam sensor	Through-beam sensor	Through-beam sensor	
Special optical feature	—	—	—	
Beam characteristic	Divergent	Divergent	Divergent	
Light type	LED, red light	LED, red light	LED, red light	
Light spot size	Ø 2.5 mm Light exit	Ø 2.5 mm Light exit	Ø 2.5 mm Light exit	
Connection	Connector, M8x1 connector, 3-pin	Connector, M8x1 connector, 3-pin	Connector, M8x1 connector, 3-pin	
Housing material	Zinc, die-cast	Zinc, die-cast	Zinc, die-cast	
Material sensing surface	Glass	Glass	Glass	
Operating voltage Ub	10...30 VDC	10...30 VDC	10...30 VDC	
Approval/Conformity	CE, cULus, EAC	CE, cULus, EAC	CE, cULus, EAC	
Trademark	Global	Global	Global	
Productview	Page 468	Page 470	Page 471	

BGL0035 BGL 30C-007-S4	**BGL003F** BGL 50C-007-S4			
			BGL0033 BGL 30C-005-S4	
		BGL0031 BGL 30C-003-S4		**BGL0039** BGL 50C-003-S4
C	C	C	C	C
18 x 80 x 93.5 mm	18 x 100 x 93.5 mm	18 x 80 x 93.5 mm	18 x 80 x 93.5 mm	18 x 100 x 93.5 mm
30 mm	50 mm	30 mm	30 mm	50 mm
Fork sensor	Fork sensor	Fork sensor	Fork sensor	Fork sensor
Through-beam sensor	Through-beam sensor	Through-beam sensor	Through-beam sensor	Through-beam sensor
Light array	Light array	Light array	Light array	Light array
Divergent	Divergent	Divergent	Divergent	Divergent
LED, red light	LED, red light	LED, red light	LED, red light	LED, red light
3 x 28 mm Light exit	3 x 28 mm Light exit	3 x 28 mm Light exit	3 x 28 mm Light exit	3 x 28 mm Light exit
Connector, M12x1 connector, 4-pin	Connector, M12x1 connector, 4-pin	Connector, M12x1 connector, 4-pin	Connector, M12x1 connector, 4-pin	Connector, M12x1 connector, 4-pin
Aluminum	Aluminum	Aluminum	Aluminum	Aluminum
PMMA	PMMA	PMMA	PMMA	PMMA
18...30 VDC	18...30 VDC	18...30 VDC	18...30 VDC	18...30 VDC
CE	CE	CE	CE	CE
—	—	—	—	—
Page 471	Page 472	Page 472	Page 472	Page 473

2 × PNP normally open/normally closed		BGL002Z BGL 30C-001-S4	BGL0037 BGL 50C-001-S4	
PNP normally open/normally closed, analog, voltage 0...10 V	BGL003C BGL 50C-005-S4			
Series	C	C	C	
Dimension	18 x 100 x 93.5 mm	18 x 80 x 93.5 mm	18 x 100 x 93.5 mm	
Fork opening	50 mm	30 mm	50 mm	
Principle of operation	Fork sensor	Fork sensor	Fork sensor	
Principle of optical operation	Through-beam sensor	Through-beam sensor	Through-beam sensor	
Special optical feature	Light array	Light array	Light array	
Beam characteristic	Divergent	Divergent	Divergent	
Light type	LED, red light	LED, red light	LED, red light	
Light spot size	3 x 28 mm Light exit	3 x 28 mm Light exit	3 x 28 mm Light exit	
Connection	Connector, M12x1 connector, 4-pin	Connector, M12x1 connector, 4-pin	Connector, M12x1 connector, 4-pin	
Housing material	Aluminum	Aluminum	Aluminum	
Material sensing surface	PMMA	PMMA	PMMA	
Operating voltage Ub	18...30 VDC	18...30 VDC	18...30 VDC	
Approval/Conformity	CE	CE	CE	
Trademark	—	—	—	
Productview	Page 473	Page 473	Page 474	

	BGL004M BGL 50F-007-00,2-S4	BGL004P BGL 80F-007-00,2-S4	BGL004L BGL 50F-001-00,2-S4	BGL004N BGL 80F-001-00,2-S4	
	F	F	F	F	
	12 x 85 x 86 mm	12 x 115 x 86 mm	12 x 85 x 86 mm	12 x 115 x 86 mm	
	50 mm	80 mm	50 mm	80 mm	
	Fork sensor	Fork sensor	Fork sensor	Fork sensor	
	Fork sensor	Fork sensor	Fork sensor	Fork sensor	
	—	—	—	—	
	Divergent	Divergent	Divergent	Divergent	
	Infrared	Infrared	LED, red light	LED, red light	
	Ø 2.0 mm Light exit	Ø 2.5 mm Light exit	Ø 1.25 mm Light exit	Ø 1.75 mm Light exit	
	Cable with connector, M12x1 connector, 4-pin, 0.25 m, PUR	Cable with connector, M12x1 connector, 4-pin, 0.25 m, PUR	Cable with connector, M12x1 connector, 4-pin, 0.25 m, PUR	Cable with connector, M12x1 connector, 4-pin, 0.25 m, PUR	
	Stainless steel (1.4404)	Stainless steel (1.4404)	Stainless steel (1.4404)	Stainless steel (1.4404)	
	PMMA	PMMA	PMMA	PMMA	
	10...30 VDC	10...30 VDC	10...30 VDC	10...30 VDC	
	CE, Ecolab	CE, Ecolab	Ecolab, CE	Ecolab, CE	
	—	—	—	—	
	Page 474	Page 475	Page 474	Page 475	

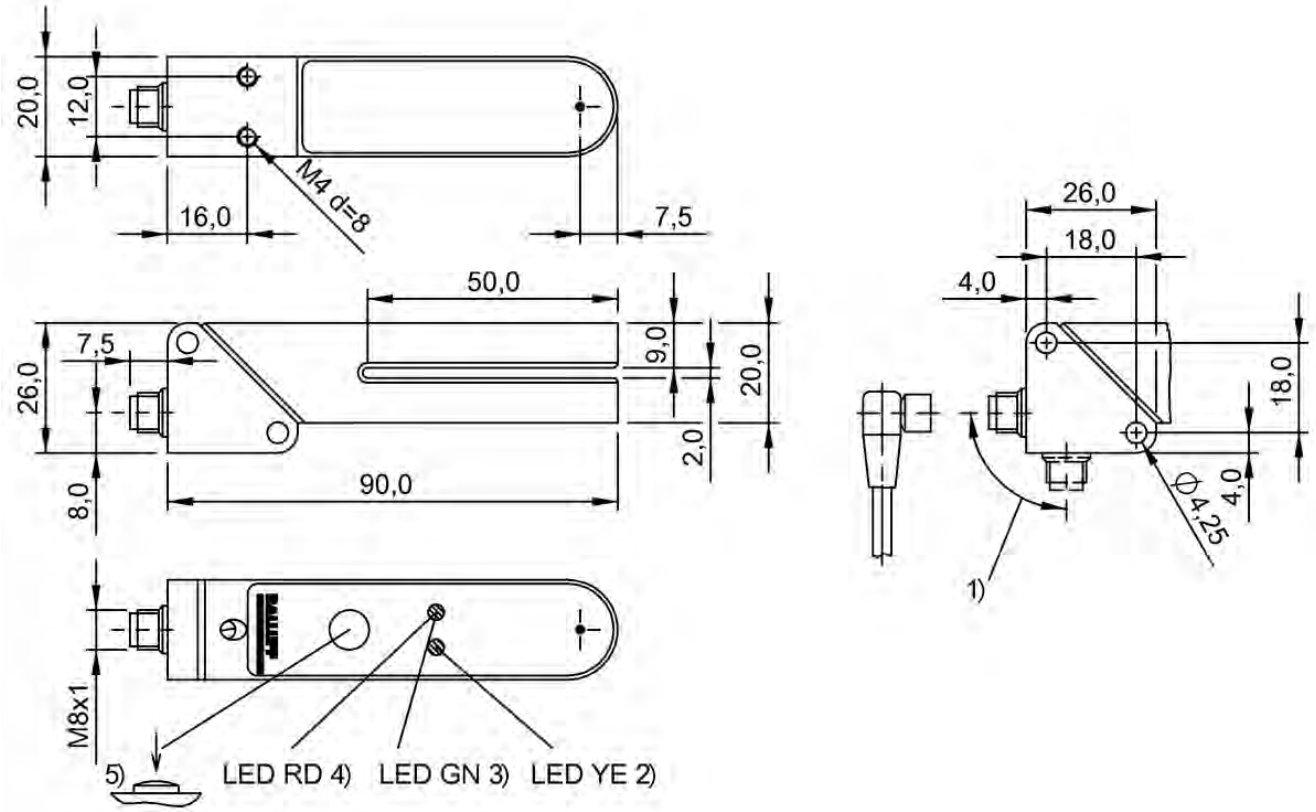

1) rotatable 180°, 2) Output function, 3) stability/error, 4) Fail/short circuit/error, 5) Sensitivity, light/dark

BGL002L, BGL002M

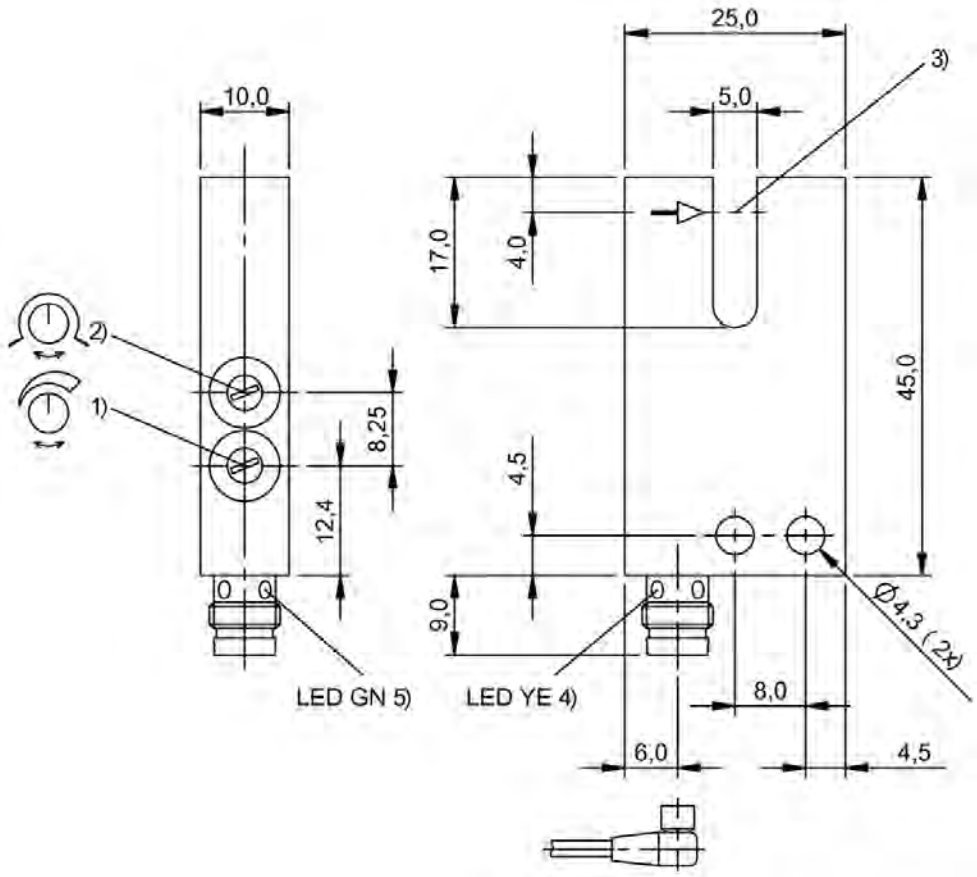

1) Sensitivity, 2) Light-on/dark-on, 3) Optical axis, 4) Output function, 5) Operating voltage

BGL0021

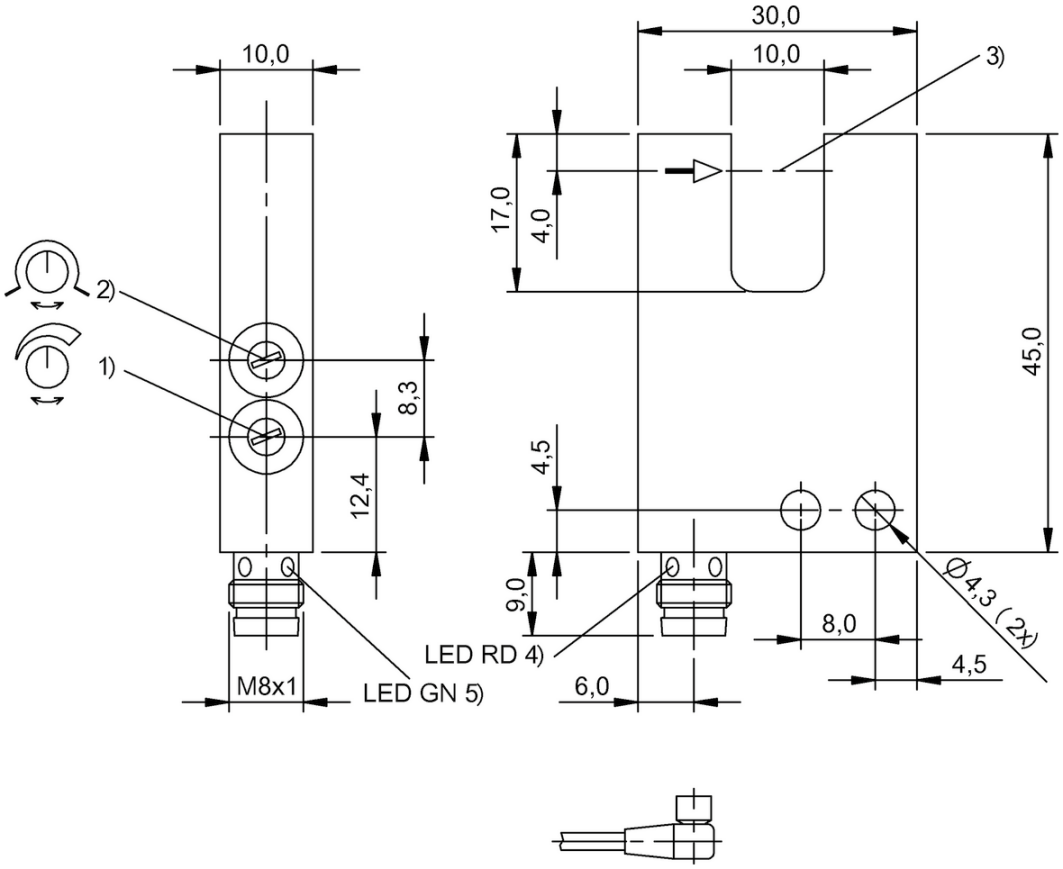

1) Sensitivity, 2) Light-on/dark-on, 3) Optical axis, 4) Output function, 5) Operating voltage

BGL0005

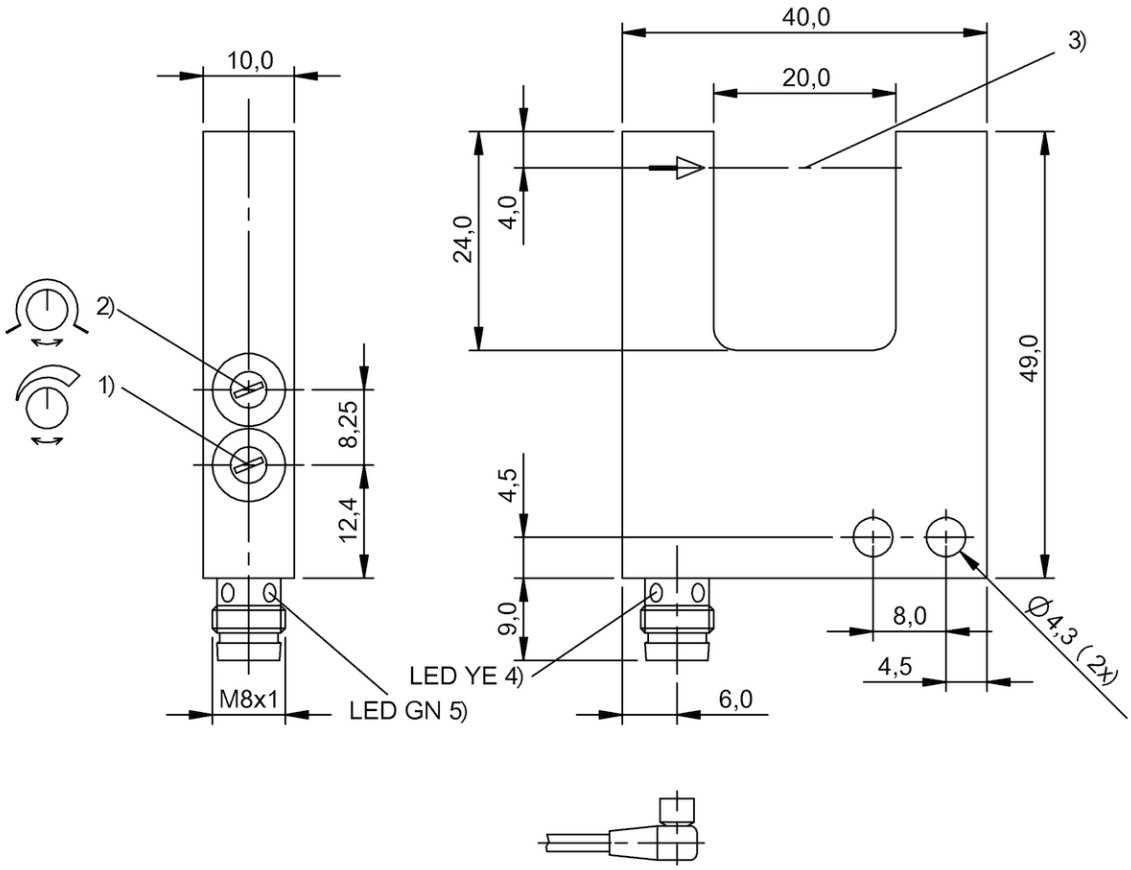

1) Sensitivity, 2) Light-on/dark-on, 3) Optical axis, 4) Output function, 5) Operating voltage

BGL000Y

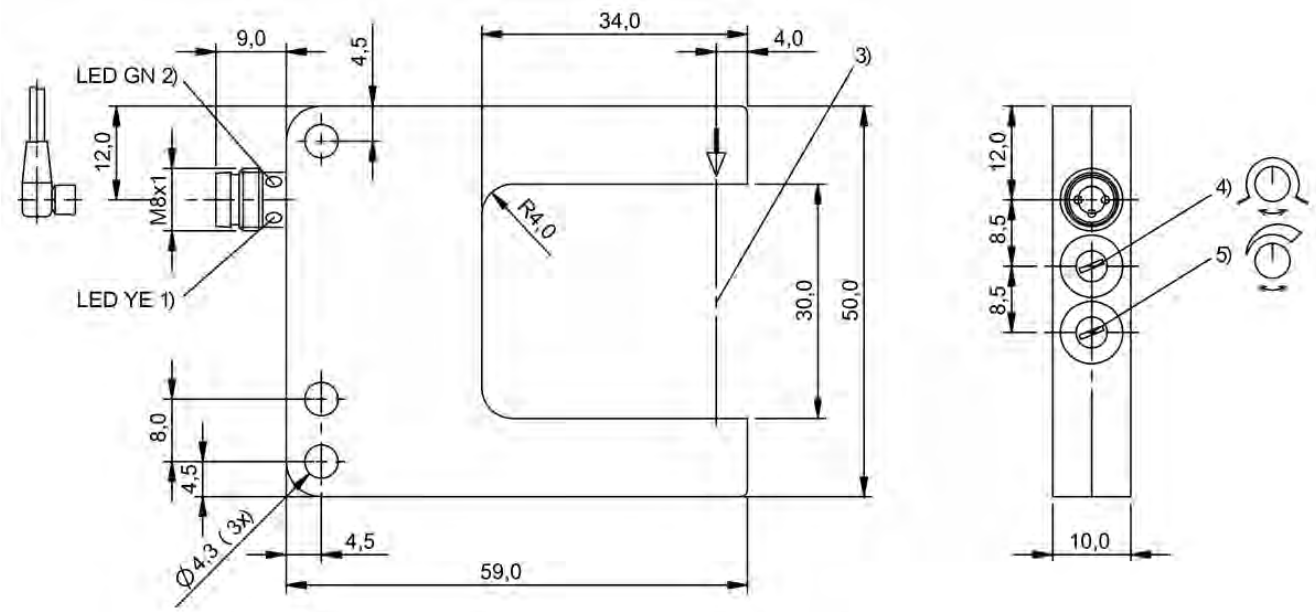

1) Output function, 2) Operating voltage, 3) Optical axis, 4) Light-on/dark-on, 5) Sensitivity

BGL001F, BGL003J

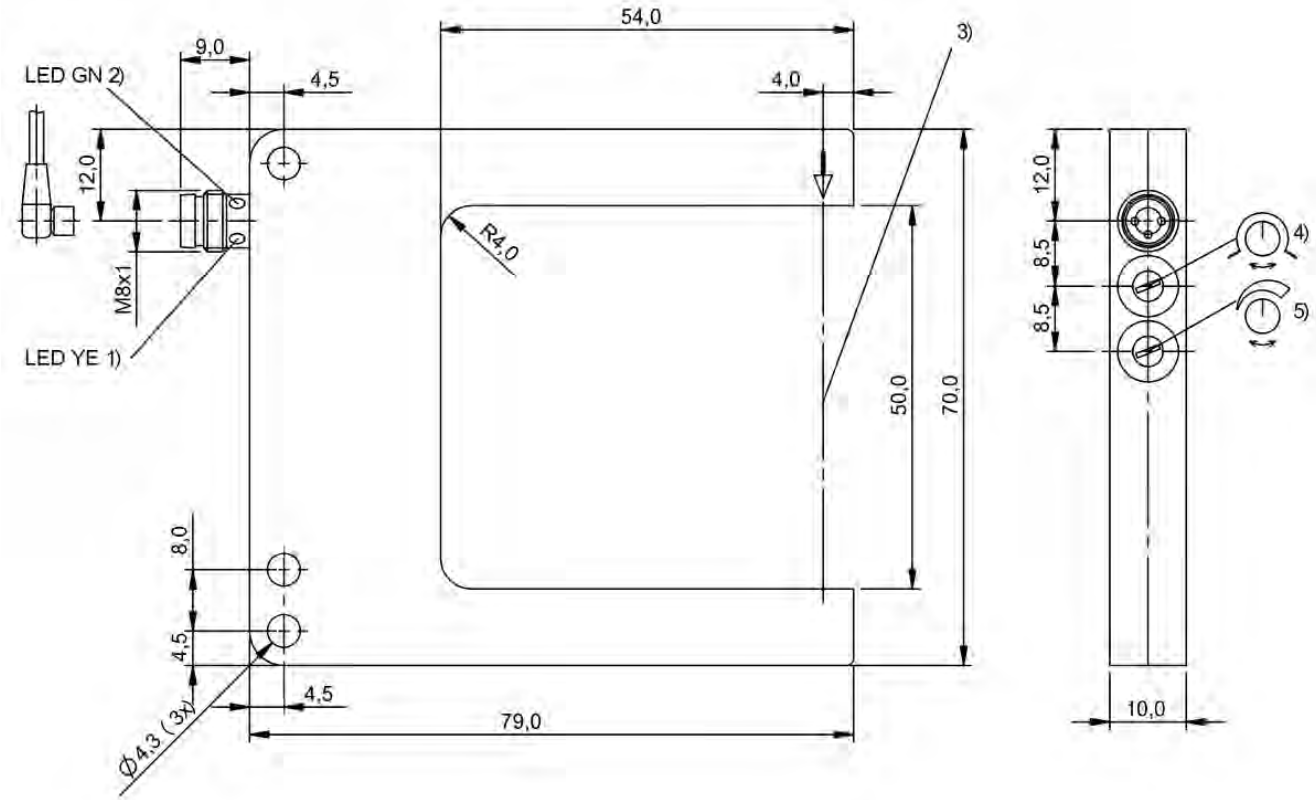

1) Output function, 2) Operating voltage, 3) Optical axis, 4) Light-on/dark-on, 5) Sensitivity

BGL001T

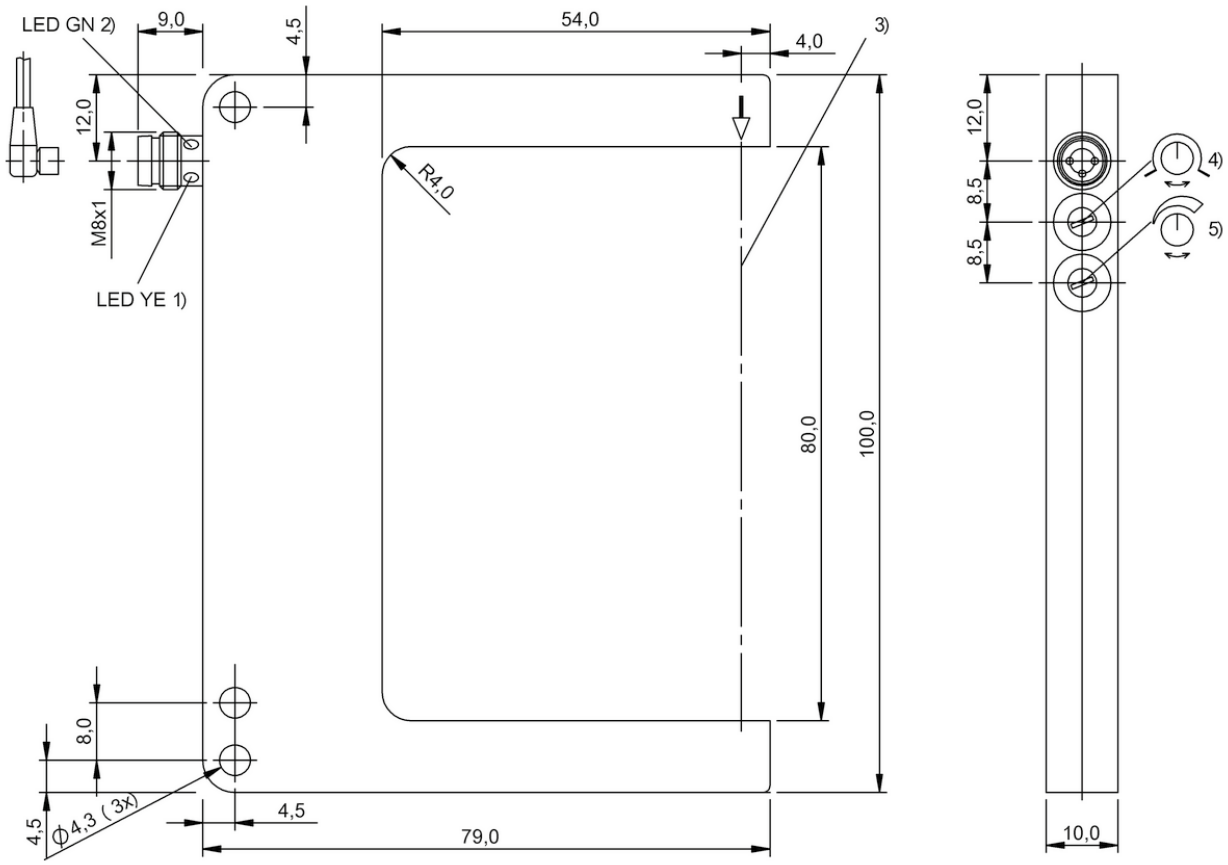

1) Output function, 2) Operating voltage, 3) Optical axis, 4) Light-on/dark-on, 5) Sensitivity

BGL0029, BGL003L

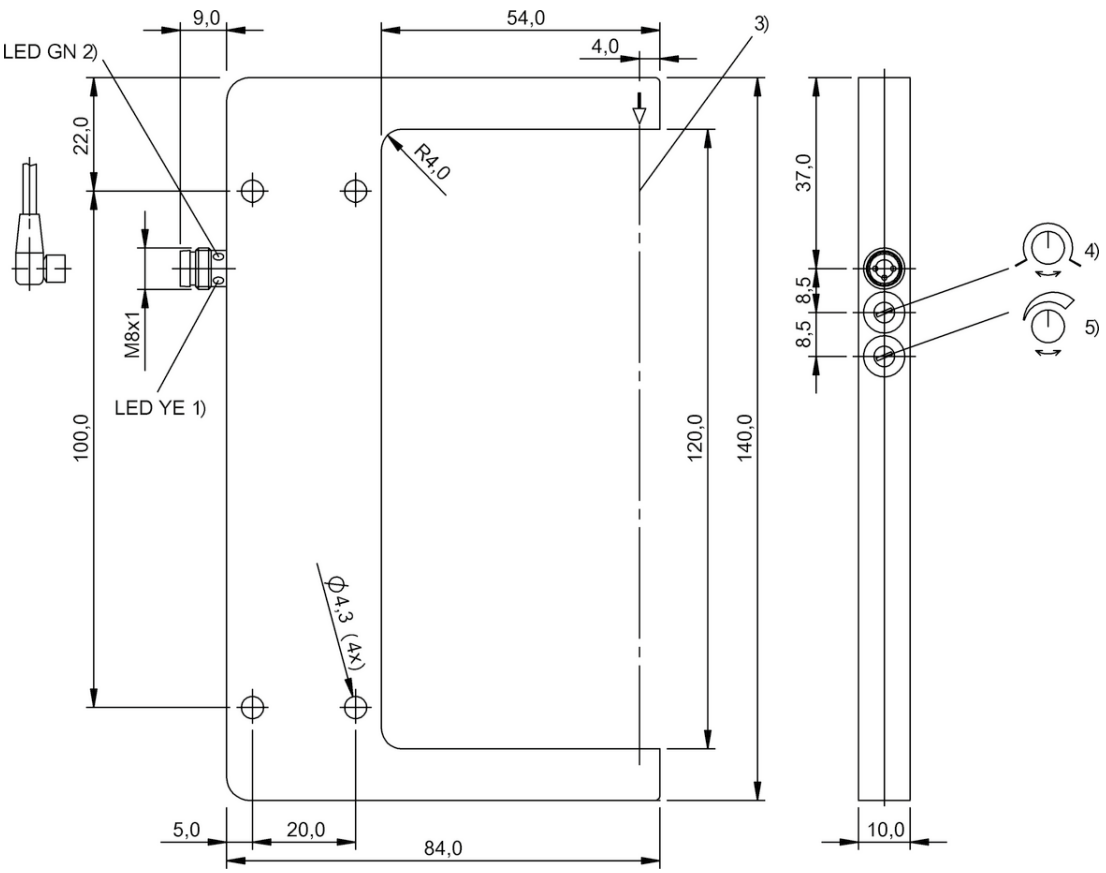

1) Output function, 2) Operating voltage, 3) Optical axis, 4) Light-on/dark-on, 5) Sensitivity

BGL000F

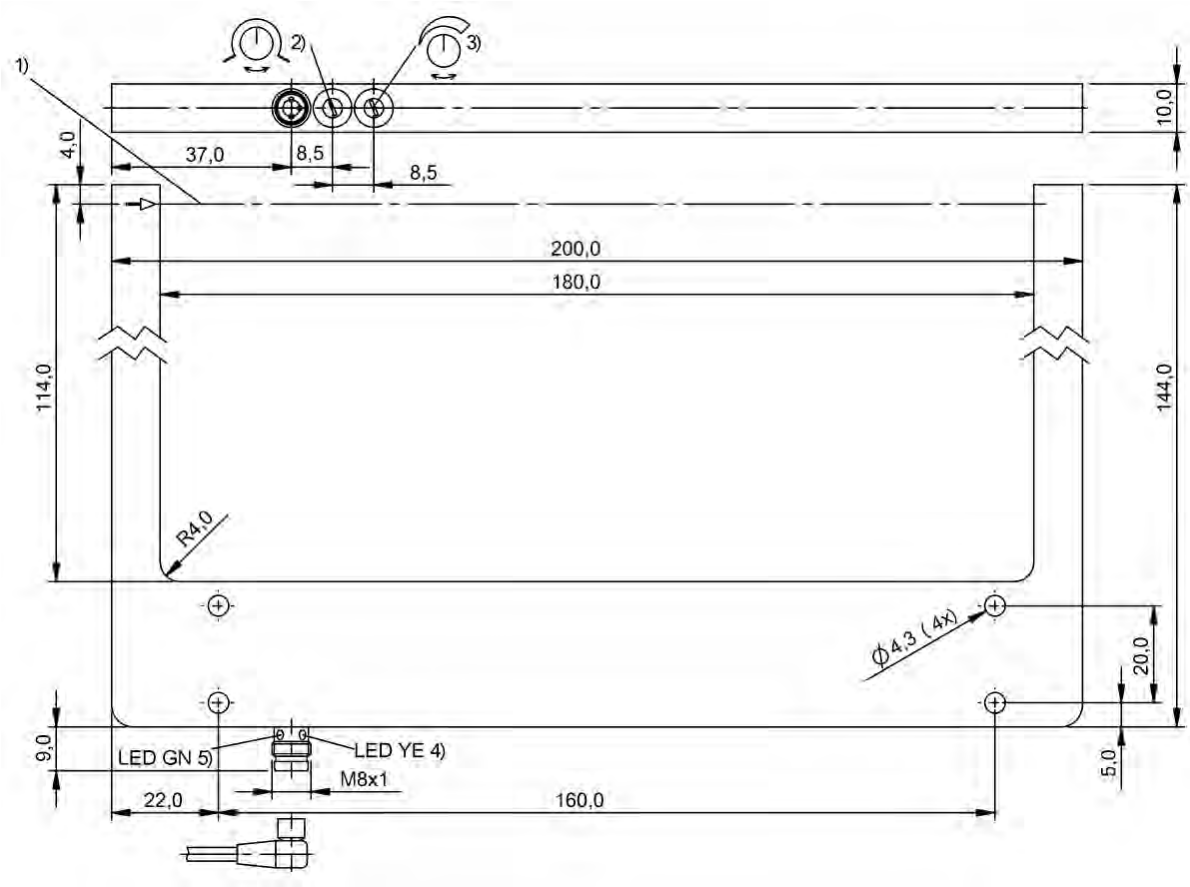

1) Optical axis, 2) Sensitivity, 3) Light-on/dark-on, 4) Output function, 5) Operating voltage

BGL000N

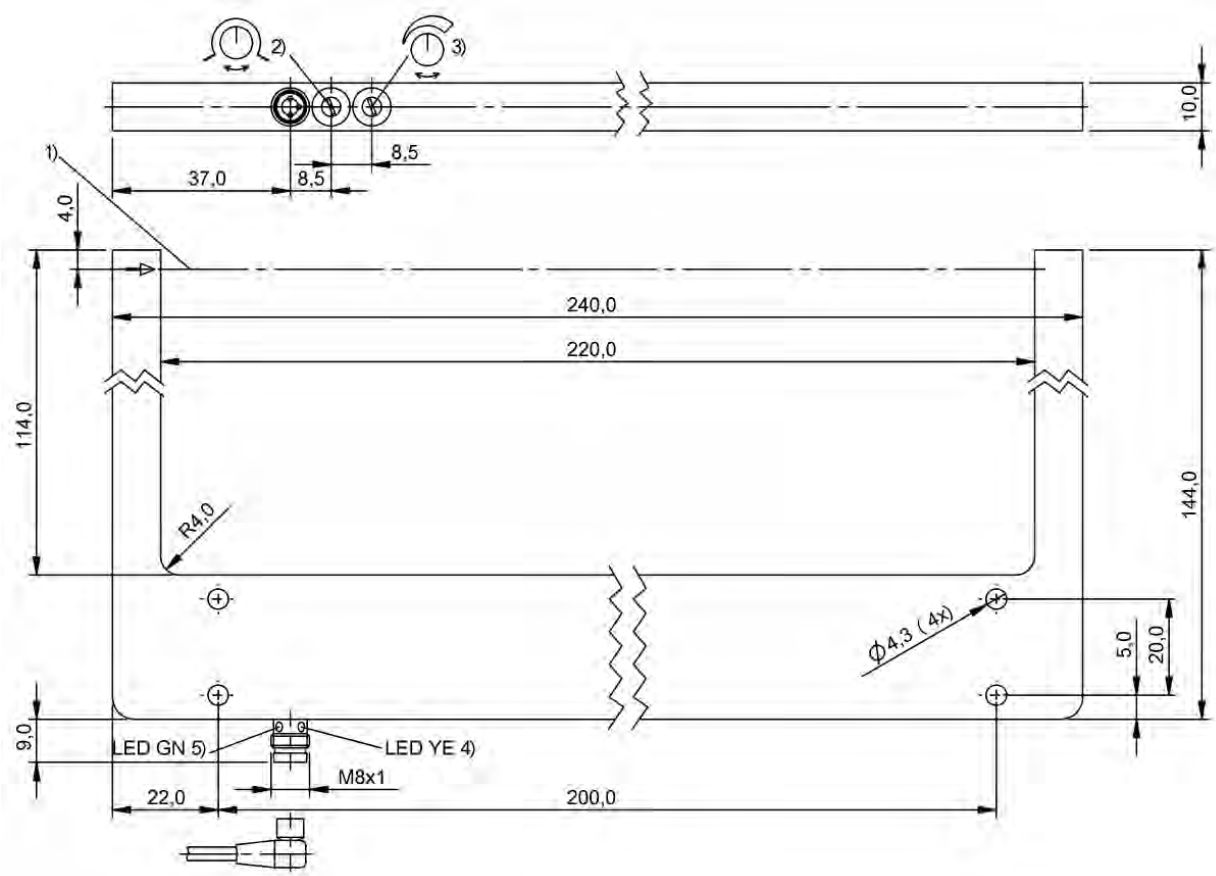

1) Optical axis, 2) Sensitivity, 3) Light-on/dark-on, 4) Output function, 5) Operating voltage

BGL0014

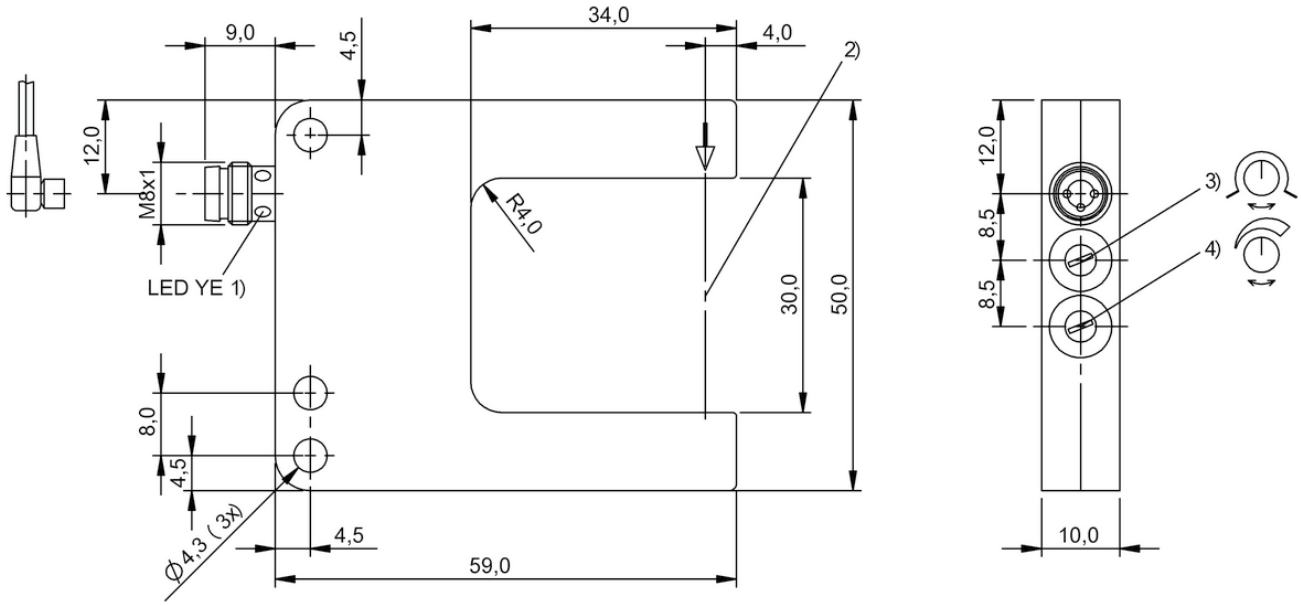

1) Output function, 2) Optical axis, 3) Light-on/dark-on, 4) Sensitivity

BGL0019, BGL001C, BGL0016

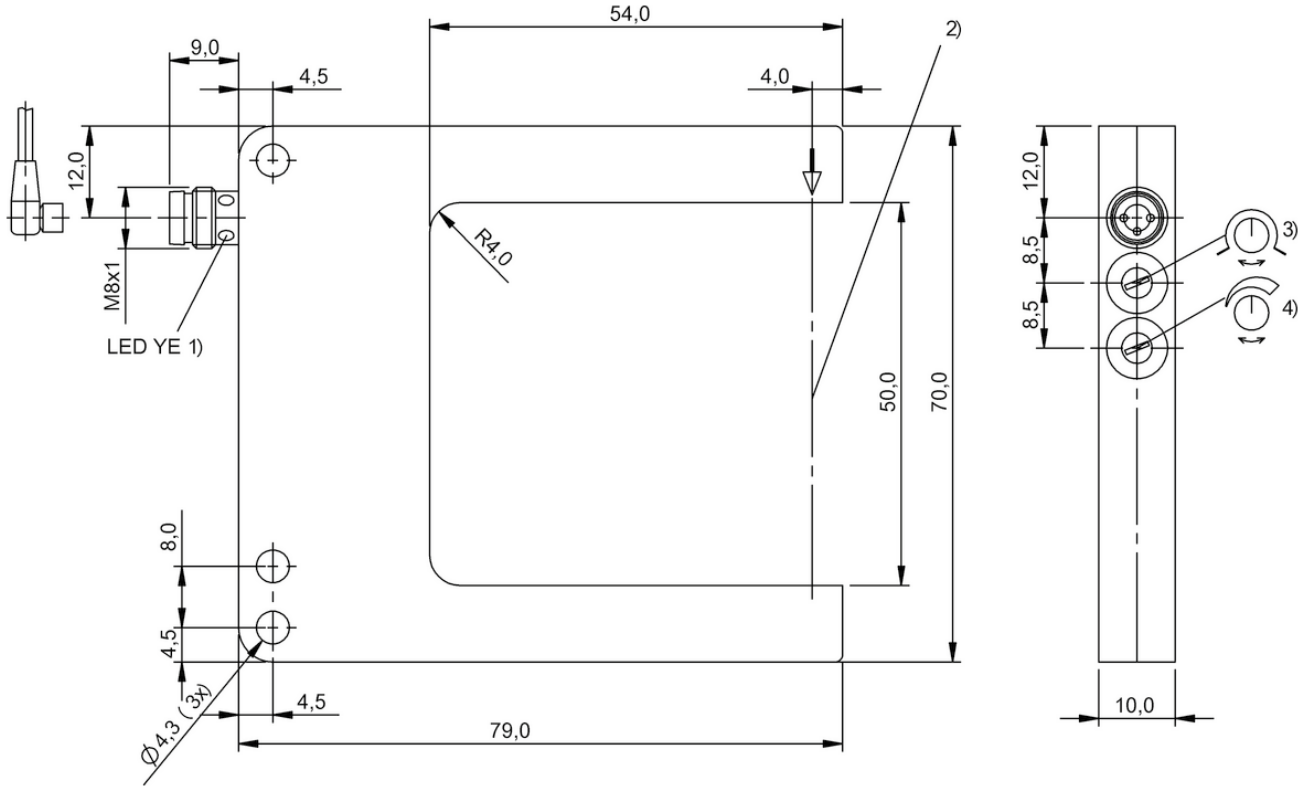

1) Output function, 2) Optical axis, 3) Light-on/dark-on, 4) Sensitivity

BGL001M, BGL001P, BGL001J

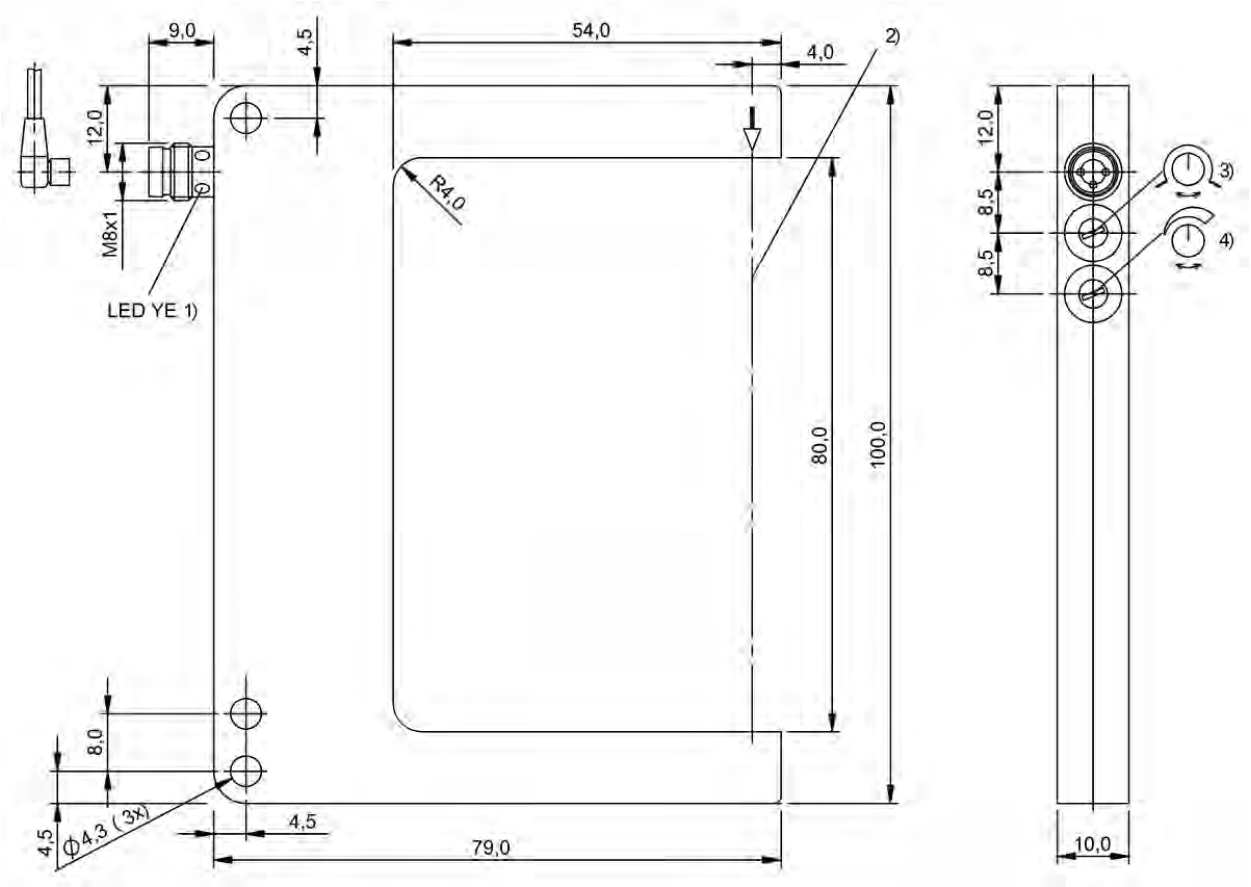

1) Output function, 2) Optical axis, 3) Light-on/dark-on, 4) Sensitivity

BGL0025, BGL0027, BGL0023

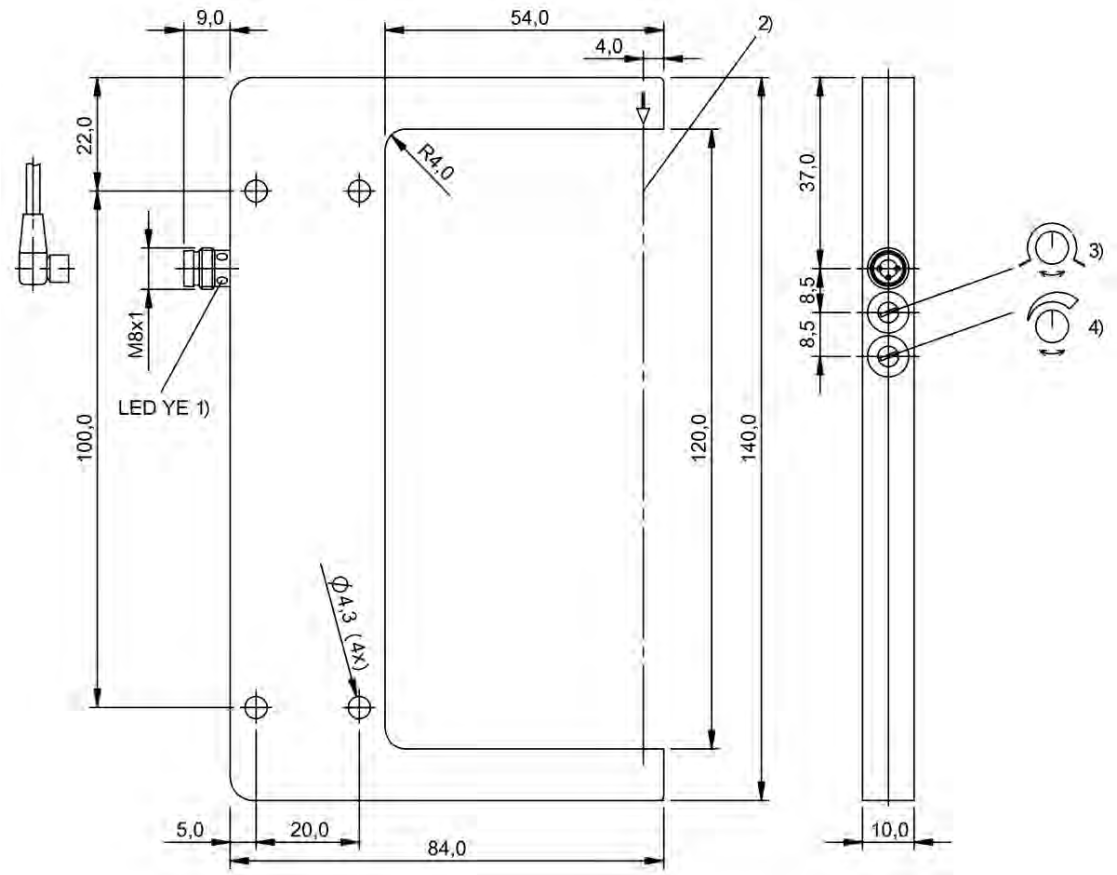

1) Output function, 2) Optical axis, 3) Light-on/dark-on, 4) Sensitivity

BGL0009, BGL000C, BGL0007

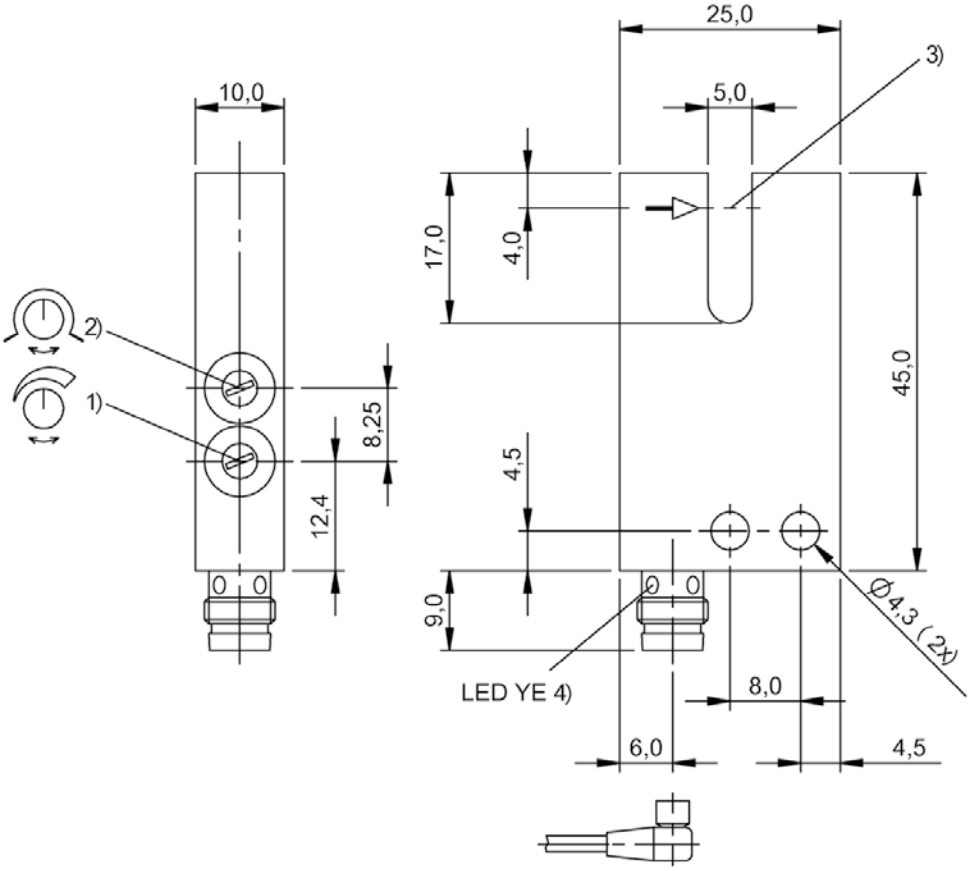

1) Sensitivity, 2) Light-on/dark-on, 3) Optical axis, 4) Output function

BGL001Z, BGL001W

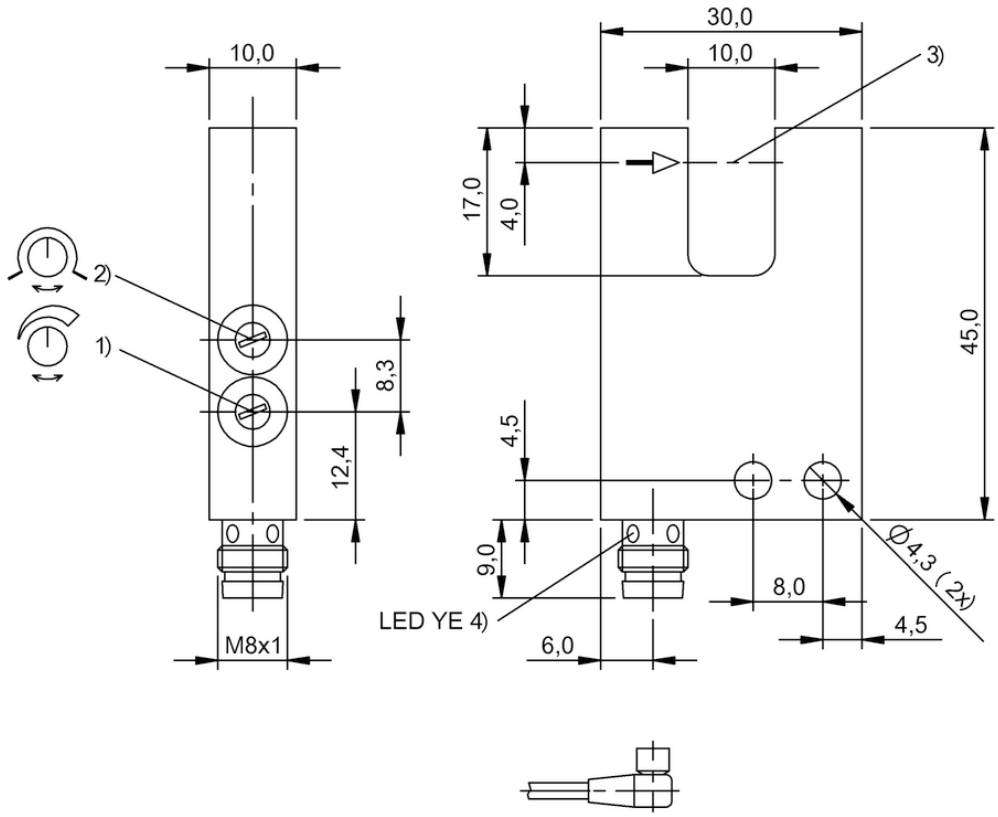

1) Sensitivity, 2) Light-on/dark-on, 3) Optical axis, 4) Output function

BGL0003, BGL0001

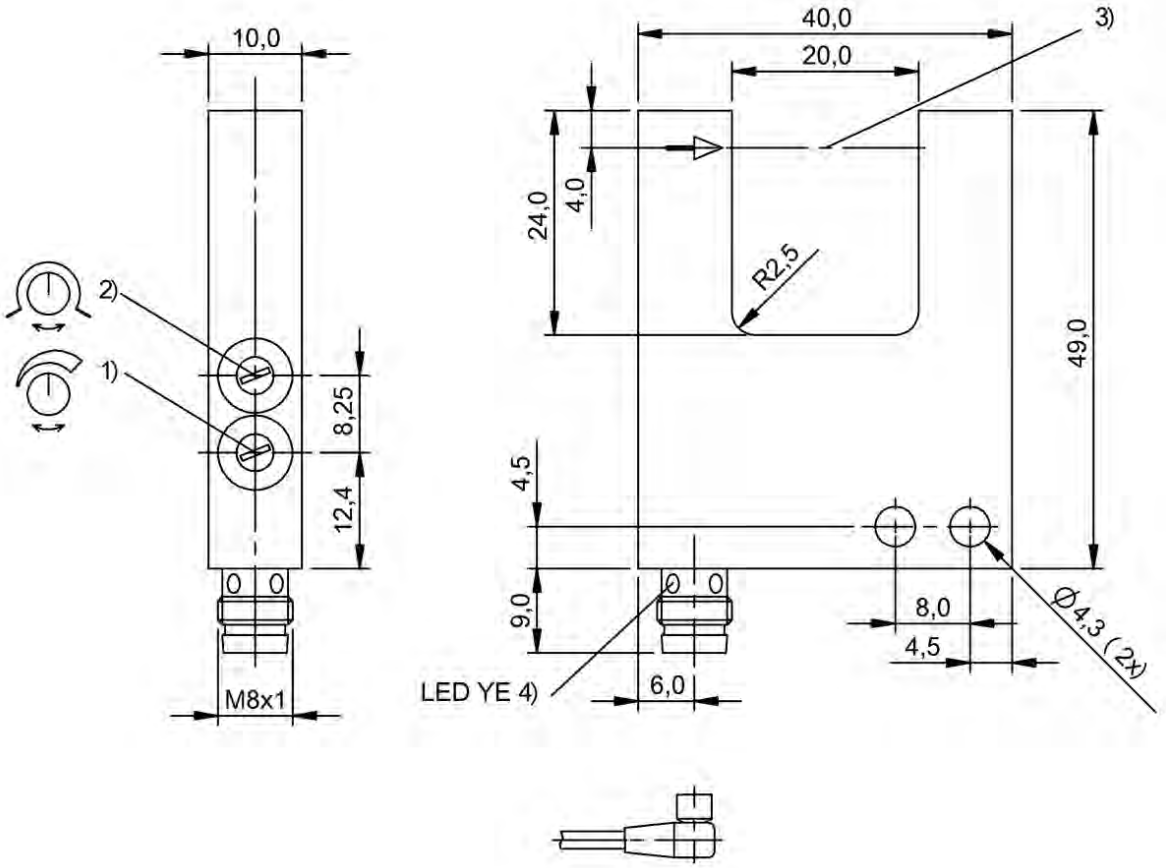

1) Sensitivity, 2) Light-on/dark-on, 3) Optical axis, 4) Output function

BGL000U, BGL000R

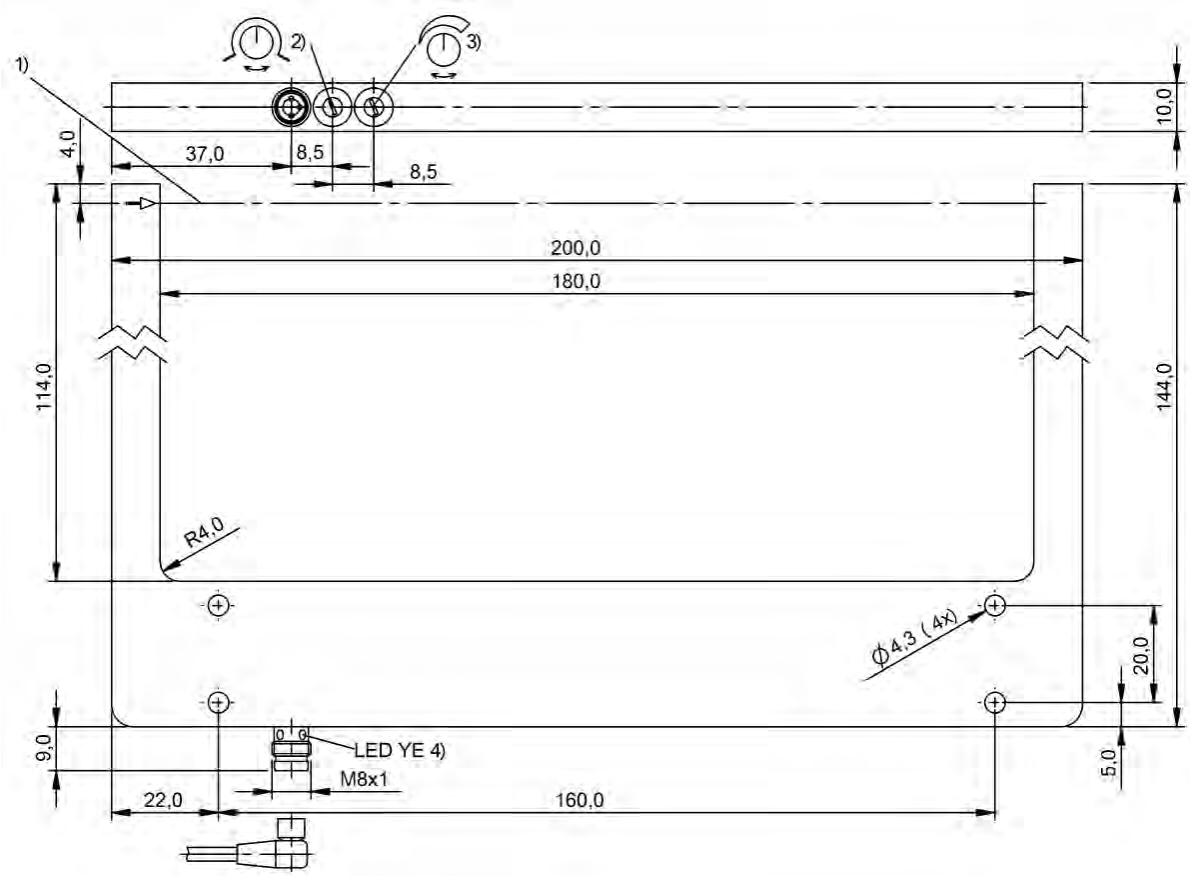

1) Optical axis, 2) Sensitivity, 3) Light-on/dark-on, 4) Output function

BGL000L, BGL000J

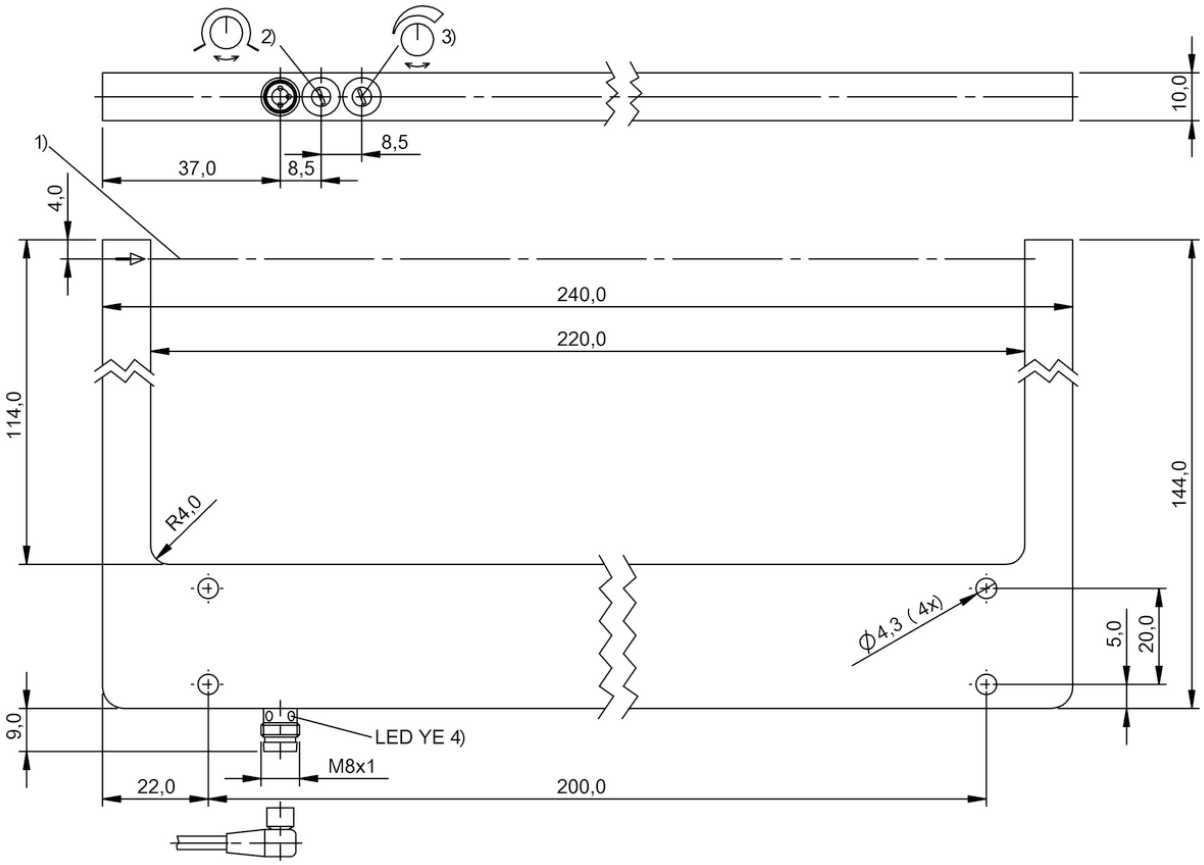

1) Optical axis, 2) Sensitivity, 3) Light-on/dark-on, 4) Output function

BGL0012, BGL0010

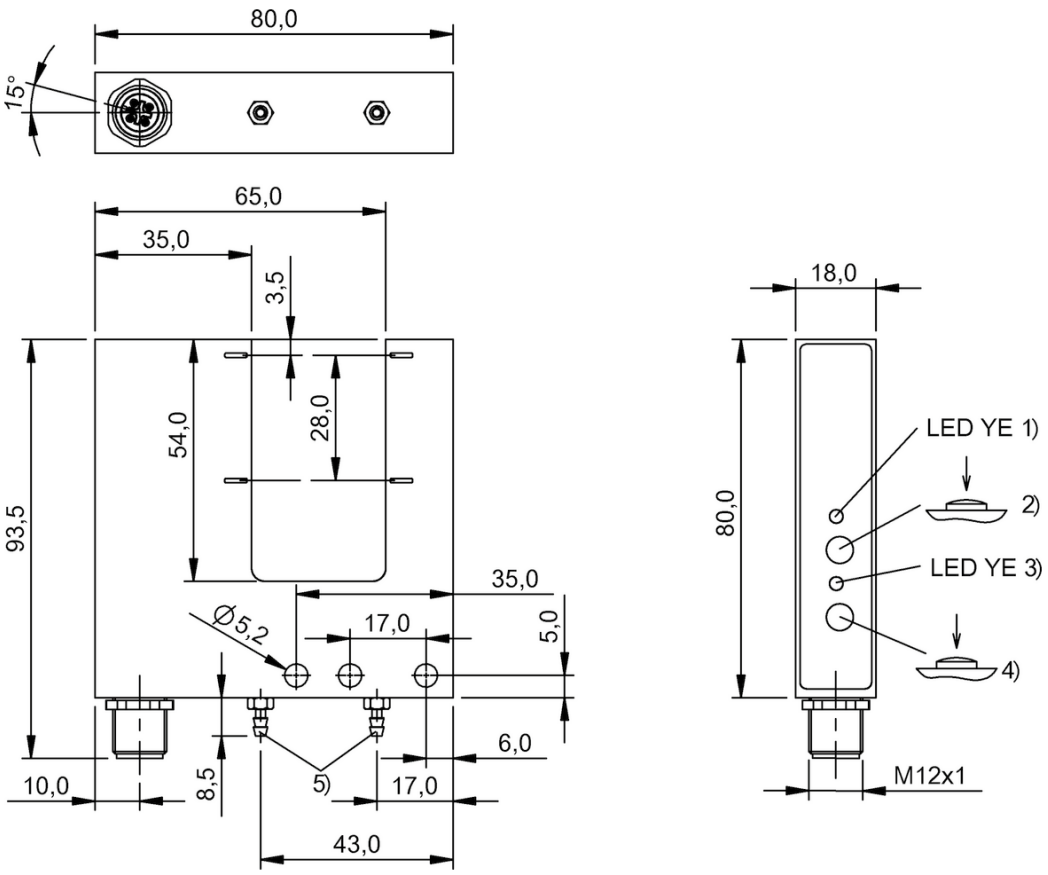

1) SP1 active / error, 2) SP1: recvr., light/dark, 3) SP2 active / error, 4) SP2: recvr., light/dark, 5) Pneumatics connection PK-3

BGL0035

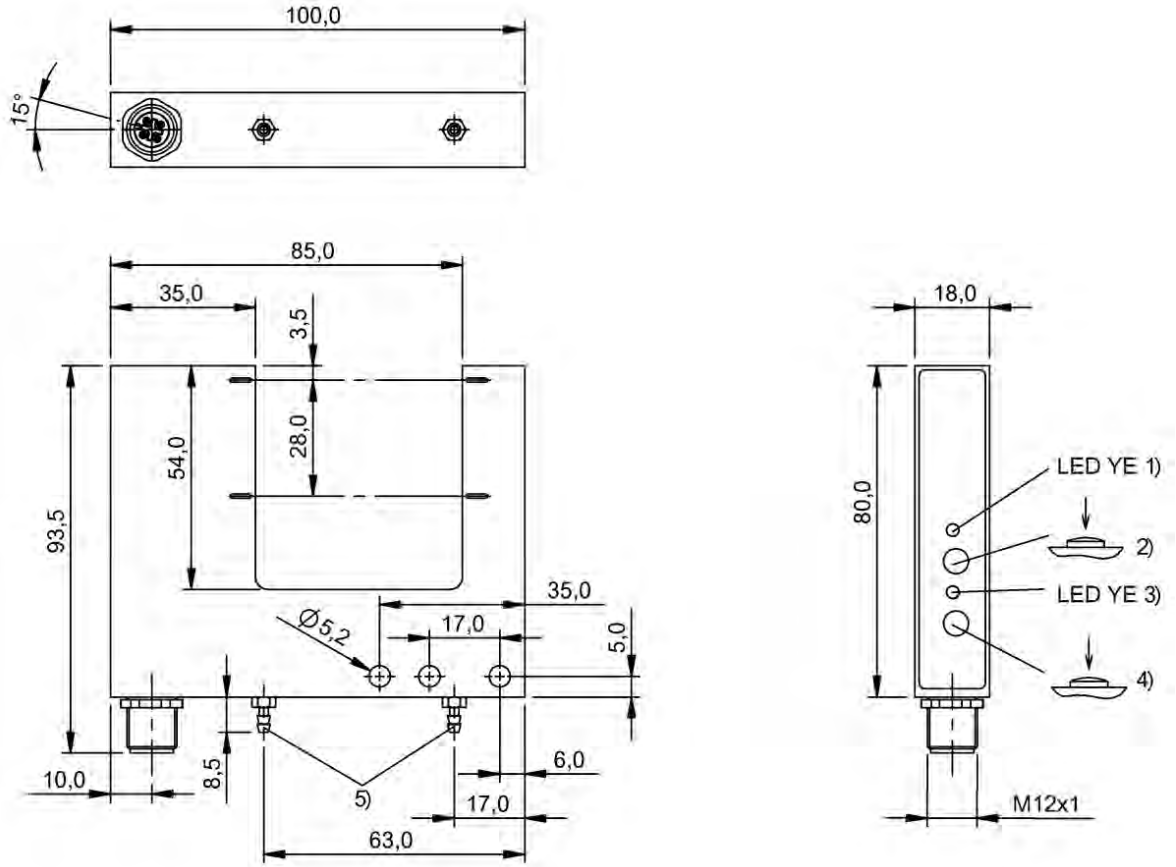

1) SP1 active / error, 2) SP1: recvr., light/dark, 3) SP2 active / error, 4) SP2: recvr., light/dark, 5) Pneumatics connection PK-3

BGL003F

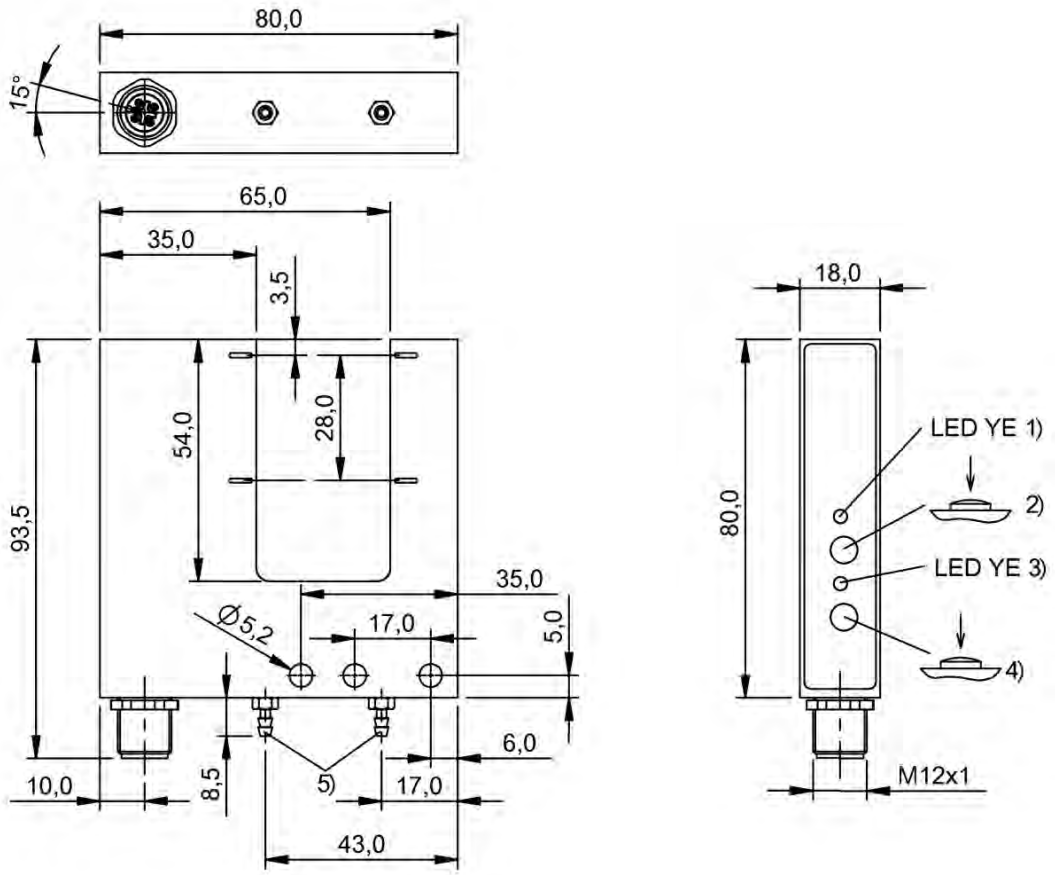

1) Output function/Error, 2) Output mode, recvr., L/D, 3) Error, 4) Output curve rising/falling, 5) Pneumatics connection PK-3

BGL0031, BGL0033

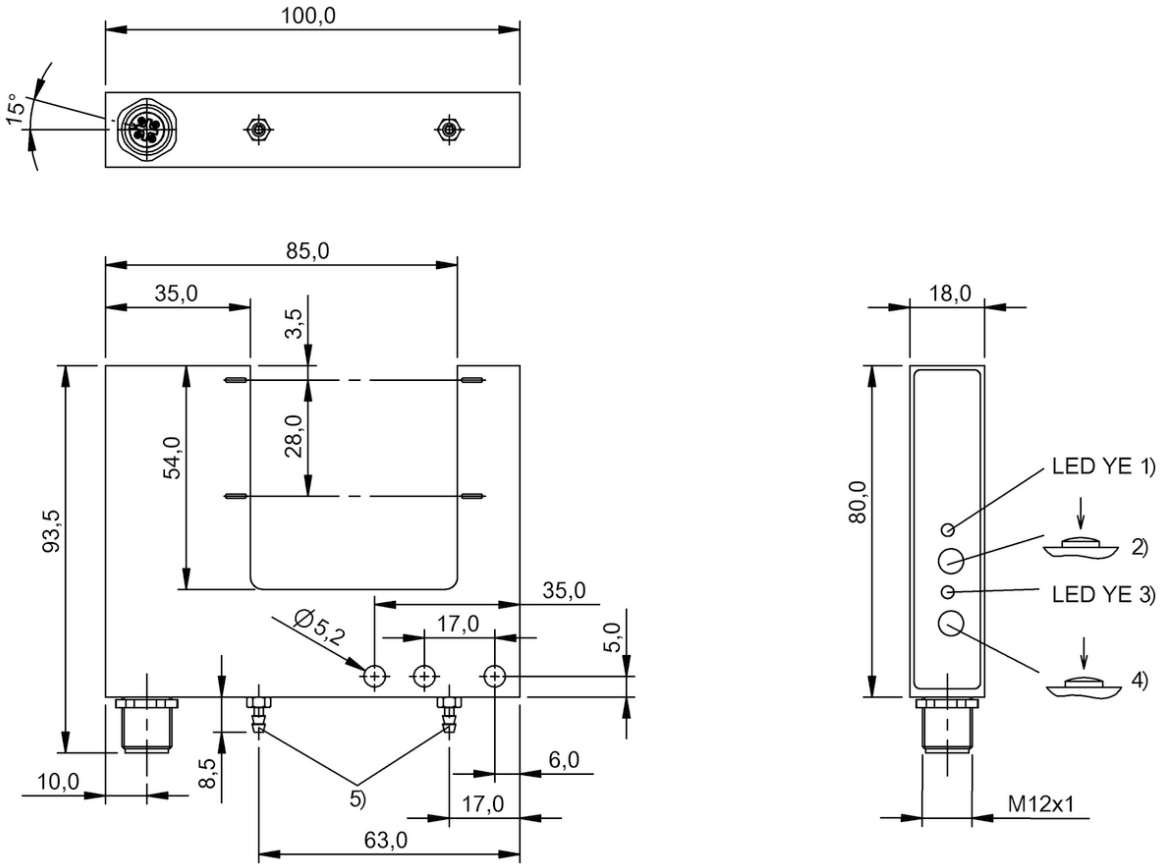

1) Output function/Error, 2) Output mode, recvr., L/D, 3) Error, 4) Output curve rising/falling, 5) Pneumatics connection PK-3

BGL0039, BGL003C

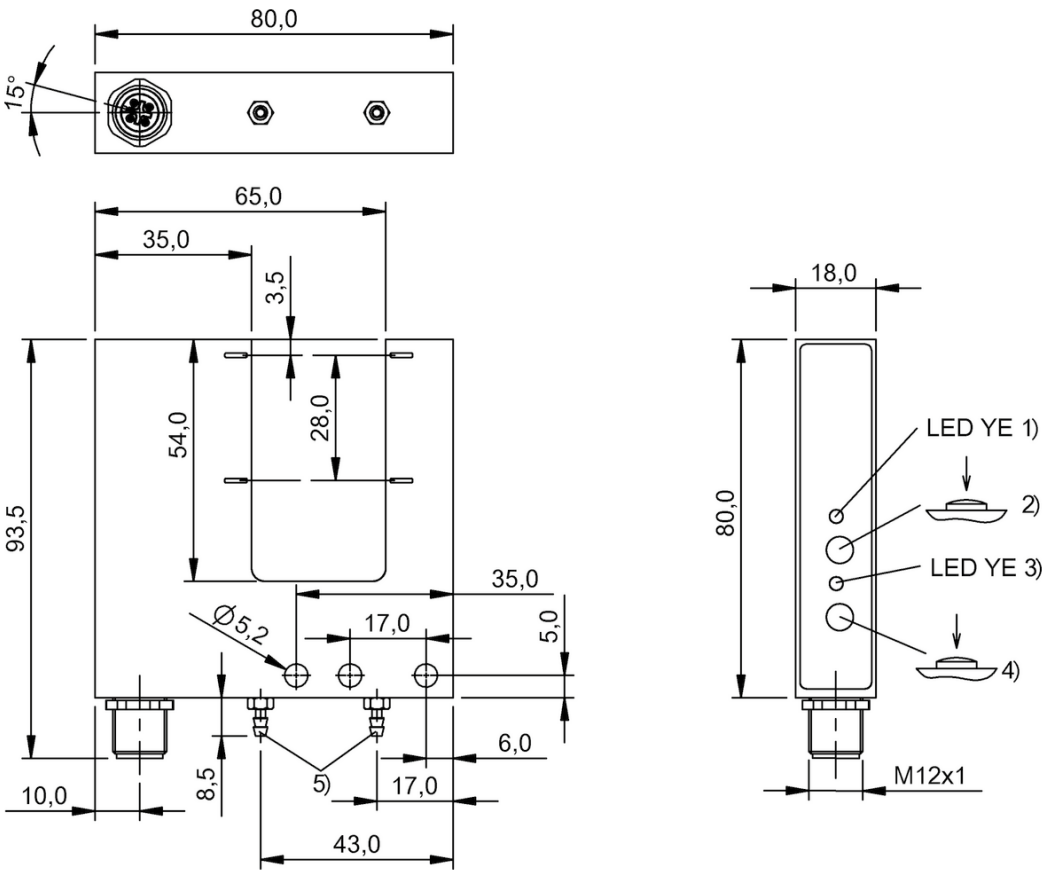

1) Q1 active / error, 2) Q1: recvr., light/dark, 3) Q2 active / error, 4) Q2: recvr., light/dark, 5) Pneumatics connection PK-3

BGL002Z

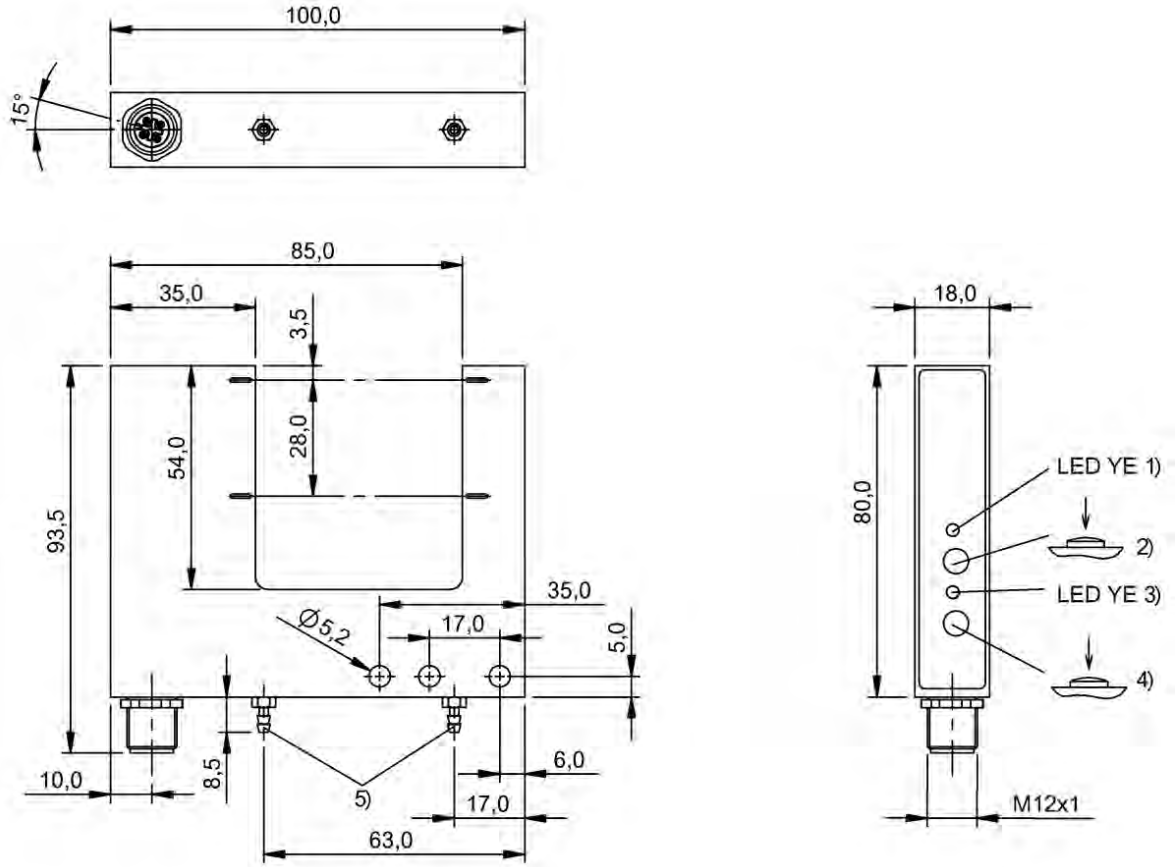

1) Q1 active / error, 2) Q1: recvr., light/dark, 3) Q2 active / error, 4) Q2: recvr., light/dark, 5) Pneumatics connection PK-3

BGL0037

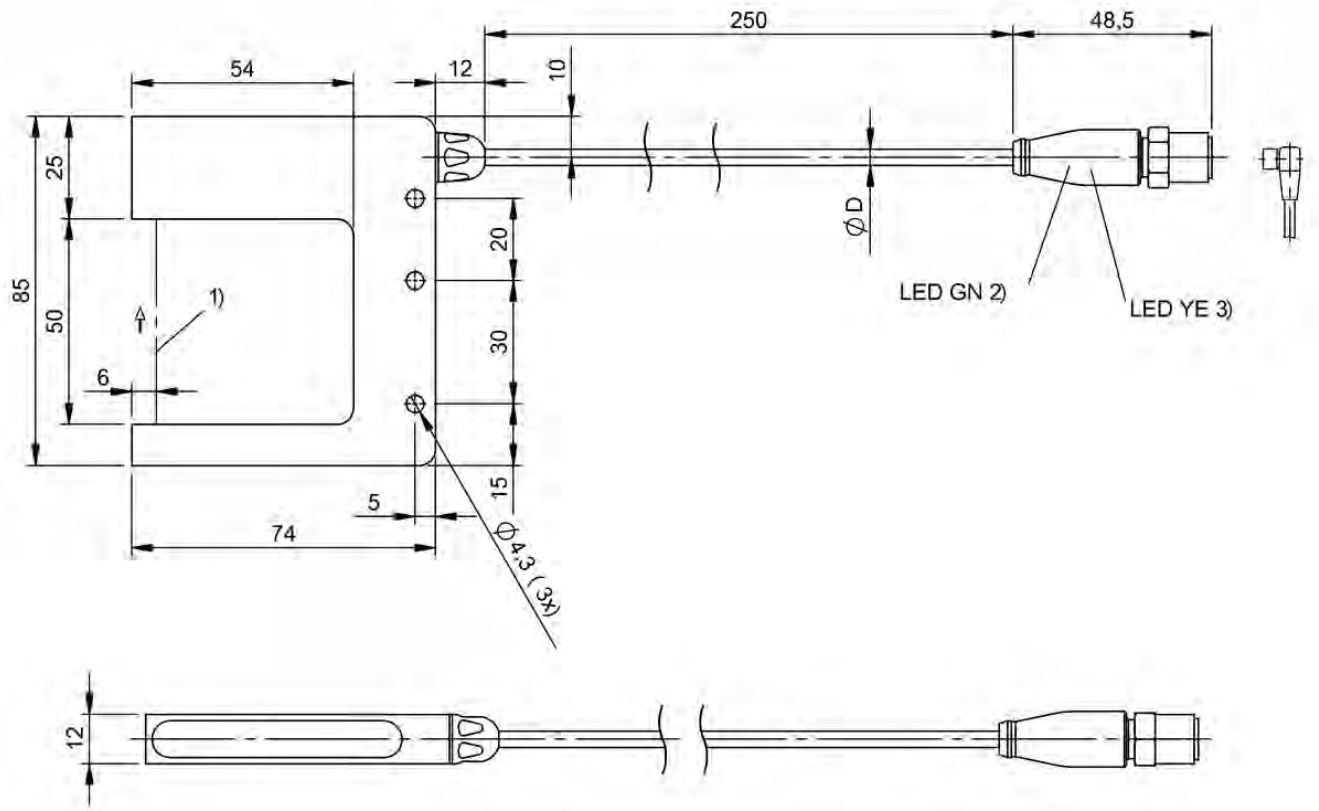

1) Optical axis, 2) Operating voltage, 3) Output function normally open

BGL004M, BGL004L

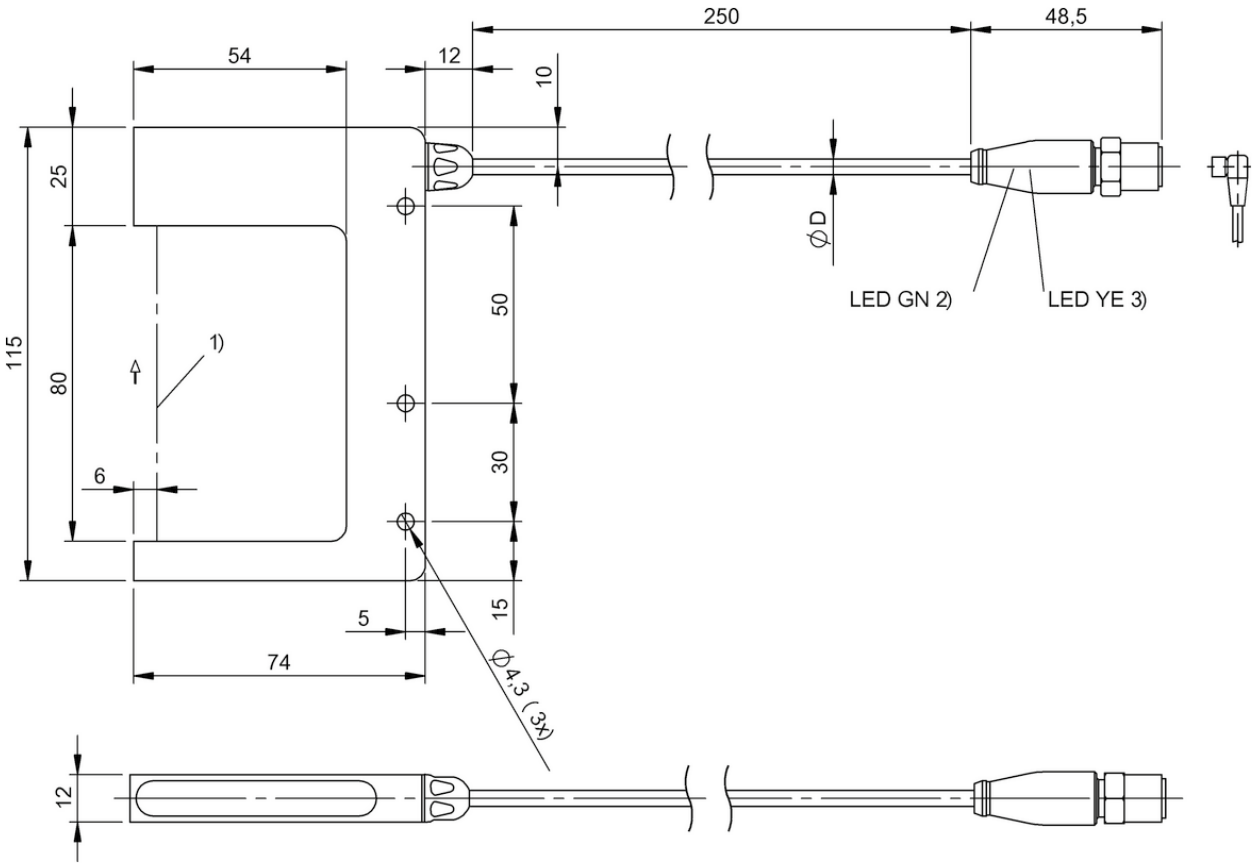

1) Optical axis, 2) Operating voltage, 3) Output function normally open

BGL004P, BGL004N

PNP normally open/normally closed	**BWL0009** BWL 4040D-I011-S49	**BWL000L** BWL 5454D-I011-S49	**BWL000Y** BWL 6868D-I011-S49
Series	D	D	D
Dimension	10 x 75 x 84 mm	10 x 90 x 99 mm	10 x 105 x 114 mm
Principle of operation	Angle sensor	Angle sensor	Angle sensor
Principle of optical operation	Through-beam sensor	Through-beam sensor	Through-beam sensor
Beam characteristic	Divergent	Divergent	Divergent
Light type	Infrared	Infrared	Infrared
Light spot size	Ø 2.5 mm Light exit	Ø 2.5 mm Light exit	Ø 2.5 mm Light exit
Connection	Connector, M8x1 connector, 3-pin	Connector, M8x1 connector, 3-pin	Connector, M8x1 connector, 3-pin
Housing material	Zinc, die-cast	Zinc, die-cast	Zinc, die-cast
Material sensing surface	Glass	Glass	Glass
Operating voltage Ub	10...30 VDC	10...30 VDC	10...30 VDC
Approval/Conformity	CE, cULus	CE, cULus	CE, cULus
Trademark	—	—	—
Productview	Page 482	Page 482	Page 483

	BWL0015 BWL 9090D-I011-S49	BWL0001 BWL 110110D-I011-S49	BWL000C BWL 4040D-L011-S49	BWL000N BWL 5454D-L011-S49	BWL0010 BWL 6868D-L011-S49
	D	D	D	D	D
	12 x 125 x 134 mm	12 x 150 x 159 mm	10 x 75 x 84 mm	10 x 90 x 99 mm	10 x 105 x 114 mm
	Angle sensor	Angle sensor	Angle sensor	Angle sensor	Angle sensor
	Through-beam sensor	Through-beam sensor	Through-beam sensor	Through-beam sensor	Through-beam sensor
	Divergent	Divergent	Collimated	Collimated	Collimated
	Infrared	Infrared	Laser red light	Laser red light	Laser red light
	Ø 2.5 mm Light exit	Ø 2.5 mm Light exit	Ø 0.2 mm Light exit	Ø 0.2 mm Light exit	Ø 0.2 mm Light exit
	Connector, M8x1 connector, 3-pin	Connector, M8x1 connector, 3-pin	Connector, M8x1 connector, 3-pin	Connector, M8x1 connector, 3-pin	Connector, M8x1 connector, 3-pin
	Zinc, die-cast	Zinc, die-cast	Zinc, die-cast	Zinc, die-cast	Zinc, die-cast
	Glass	Glass	Glass	Glass	Glass
	10...30 VDC	10...30 VDC	10...30 VDC	10...30 VDC	10...30 VDC
	CE, cULus	CE, cULus	CE, cULus, EAC	CE, cULus, EAC	CE, cULus, EAC
	–	–	–	–	–
	Page 483	Page 484	Page 484	Page 485	Page 485

PNP normally open/normally closed	**BWL0017** BWL 9090D-L011-S49	**BWL0003** BWL 110110D-L011-S49	**BWL000J** BWL 4040D-R013-S49	
Series	D	D	D	
Dimension	12 x 125 x 134 mm	12 x 150 x 159 mm	10 x 75 x 84 mm	
Principle of operation	Angle sensor	Angle sensor	Angle sensor	
Principle of optical operation	Through-beam sensor	Through-beam sensor	Through-beam sensor	
Beam characteristic	Collimated	Collimated	Divergent	
Light type	Laser red light	Laser red light	Red light	
Light spot size	Ø 0.2 mm Light exit	Ø 0.2 mm Light exit	Ø 1.7 mm Light exit	
Connection	Connector, M8x1 connector, 3-pin	Connector, M8x1 connector, 3-pin	Connector, M8x1 connector, 3-pin	
Housing material	Zinc, die-cast	Zinc, die-cast	Zinc, die-cast	
Material sensing surface	Glass	Glass	Glass	
Operating voltage Ub	10...30 VDC	10...30 VDC	10...30 VDC	
Approval/Conformity	CE, cULus, EAC	CE, cULus, EAC	CE, cULus	
Trademark	—	—	—	
Productview	Page 486	Page 486	Page 484	

	BWL000U BWL 5454D-R013-S49	BWL001N BWL 6868D-R013-S49	BWL001C BWL 9090D-R013-S49	BWL0007 BWL 110110D-R013-S49	BWL000F BWL 4040D-R011-S49
	D	D	D	D	D
	10 x 90 x 99 mm	10 x 105 x 114 mm	12 x 125 x 134 mm	12 x 150 x 159 mm	10 x 75 x 84 mm
	Angle sensor	Angle sensor	Angle sensor	Angle sensor	Angle sensor
	Through-beam sensor	Through-beam sensor	Through-beam sensor	Through-beam sensor	Through-beam sensor
	Divergent	Divergent	Divergent	Divergent	Divergent
	Red light	Red light	Red light	Red light	LED, red light
	Ø 2.0 mm Light exit	Ø 2.5 mm Light exit	Ø 2.5 mm Light exit	Ø 2.5 mm Light exit	Ø 1.7 mm Light exit
	Connector, M8x1 connector, 3-pin	Connector, M8x1 connector, 3-pin	Connector, M8x1 connector, 3-pin	Connector, M8x1 connector, 3-pin	Connector, M8x1 connector, 3-pin
	Zinc, die-cast	Zinc, die-cast	Zinc, die-cast	Zinc, die-cast	Zinc, die-cast
	Glass	Glass	Glass	Glass	Glass
	10...30 VDC	10...30 VDC	10...30 VDC	10...30 VDC	10...30 VDC
	CE, cULus	CE, cULus	CE, cULus	CE, cULus	CE, cULus, EAC
	—	—	—	—	Global
	Page 485	Page 485	Page 486	Page 486	Page 484

PNP normally open/normally closed	**BWL000R** BWL 5454D-R011-S49	**BWL0012** BWL 6868D-R011-S49	**BWL0019** BWL 9090D-R011-S49	
Series	D	D	D	
Dimension	10 x 90 x 99 mm	10 x 105 x 114 mm	12 x 125 x 134 mm	
Principle of operation	Angle sensor	Angle sensor	Angle sensor	
Principle of optical operation	Through-beam sensor	Through-beam sensor	Through-beam sensor	
Beam characteristic	Divergent	Divergent	Divergent	
Light type	LED, red light	LED, red light	LED, red light	
Light spot size	Ø 2.0 mm Light exit	Ø 2.5 mm Light exit	Ø 2.5 mm Light exit	
Connection	Connector, M8x1 connector, 3-pin	Connector, M8x1 connector, 3-pin	Connector, M8x1 connector, 3-pin	
Housing material	Zinc, die-cast	Zinc, die-cast	Zinc, die-cast	
Material sensing surface	Glass	Glass	Glass	
Operating voltage Ub	10...30 VDC	10...30 VDC	10...30 VDC	
Approval/Conformity	CE, cULus, EAC	CE, cULus, EAC	CE, cULus, EAC	
Trademark	Global	Global	Global	
Productview	Page 485	Page 485	Page 486	

	BWL0005 BWL 110110D-R011-S49				
	D				
	12 x 150 x 159 mm				
	Angle sensor				
	Through-beam sensor				
	Divergent				
	LED, red light				
	Ø 2.5 mm Light exit				
	Connector, M8x1 connector, 3-pin				
	Zinc, die-cast				
	Glass				
	10...30 VDC				
	CE, cULus, EAC				
	Global				
	Page 486				

Do you need more details? Our Product Finder at www.balluff.com provides you with product-specific information, including technical drawings, data sheets, user guides and more for each individual product. All items are available for download.

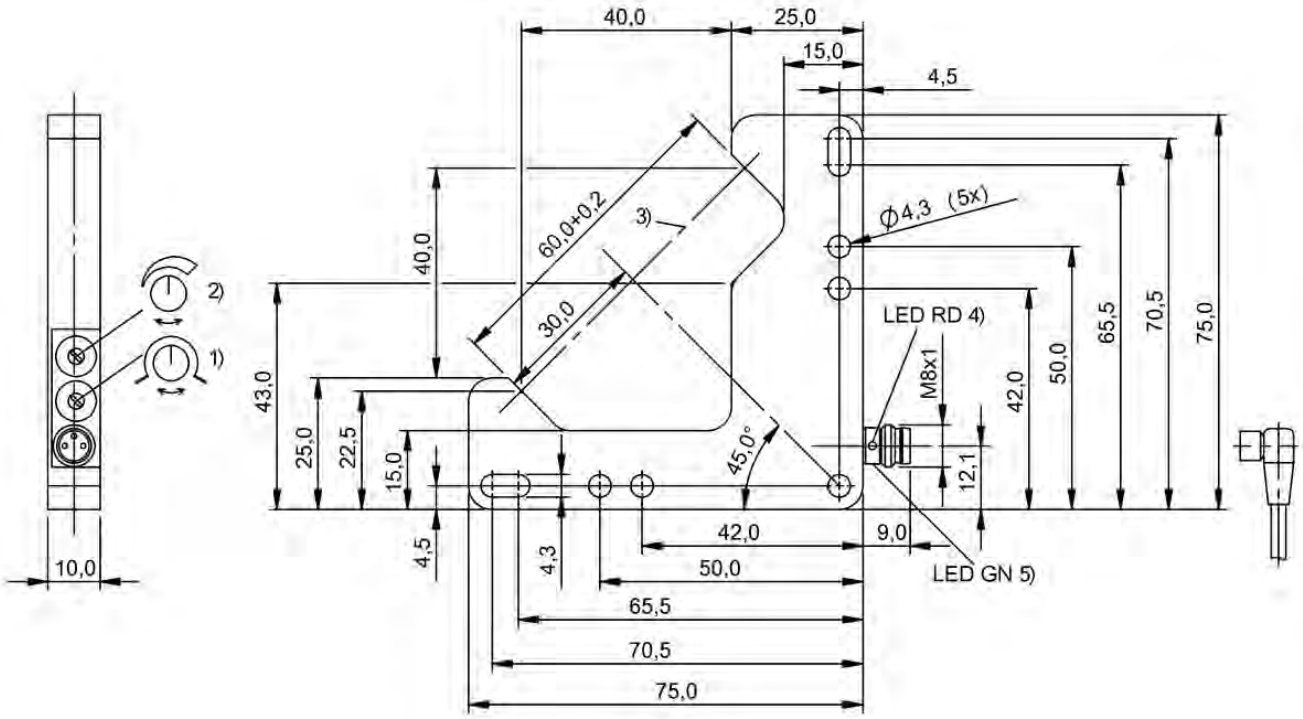

1) Light-on/dark-on, 2) Sensitivity, 3) Optical axis, 4) Output function, 5) Operating voltage

BWL0009

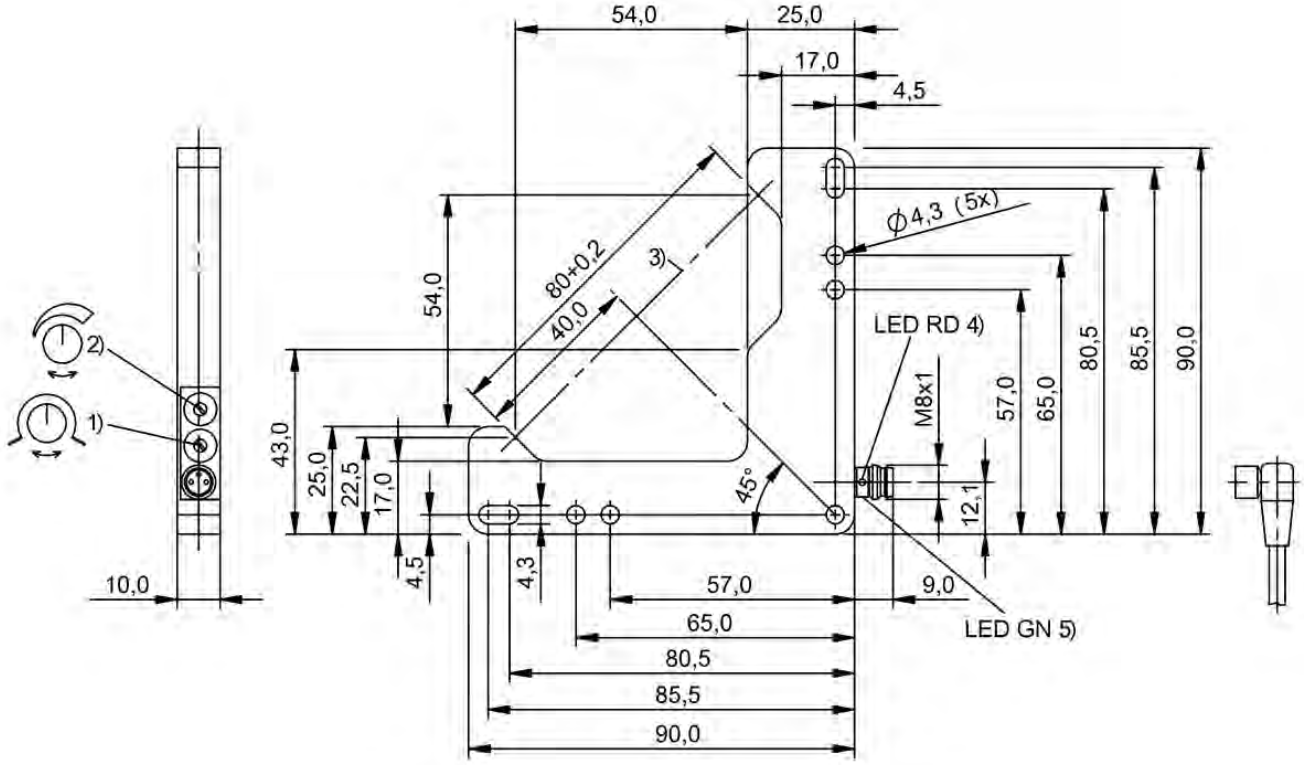

1) Light-on/dark-on, 2) Sensitivity, 3) Optical axis, 4) Output function, 5) Operating voltage

BWL000L

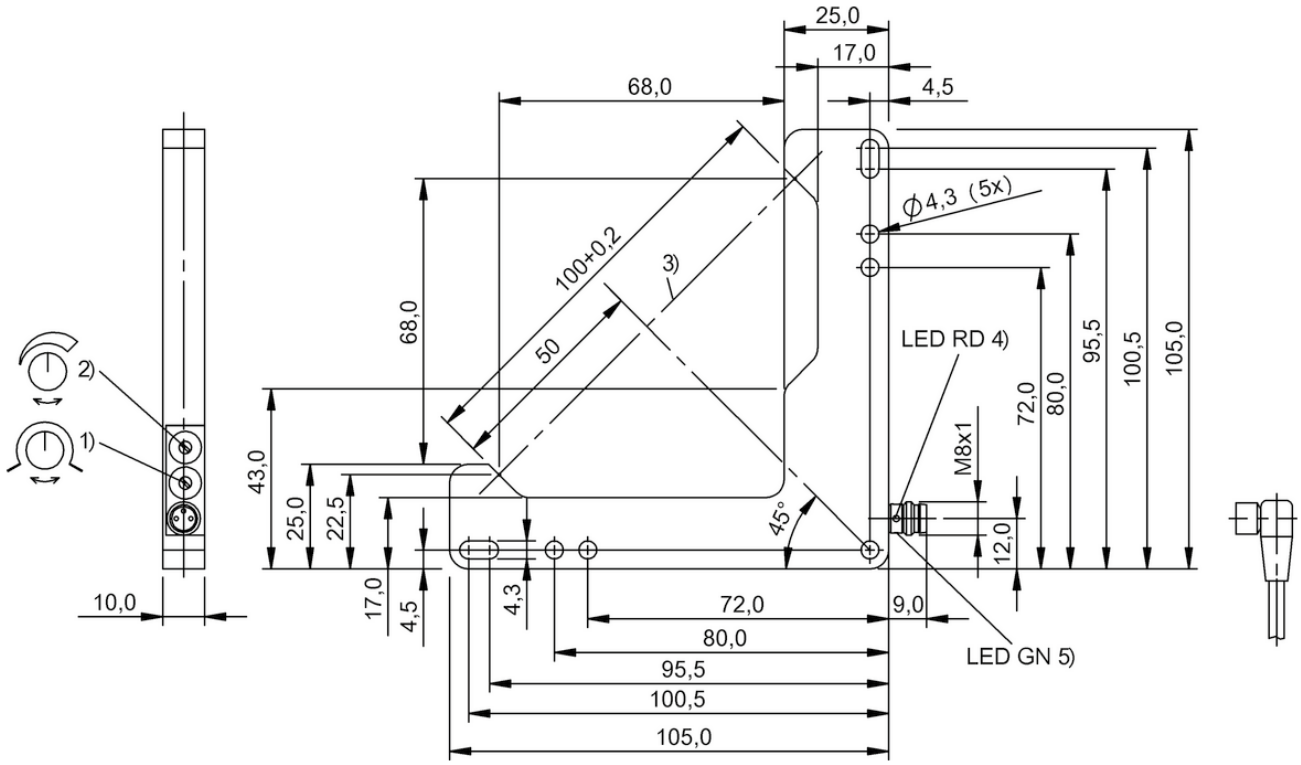

1) Light-on/dark-on, 2) Sensitivity, 3) Optical axis, 4) Output function, 5) Operating voltage

BWL000Y

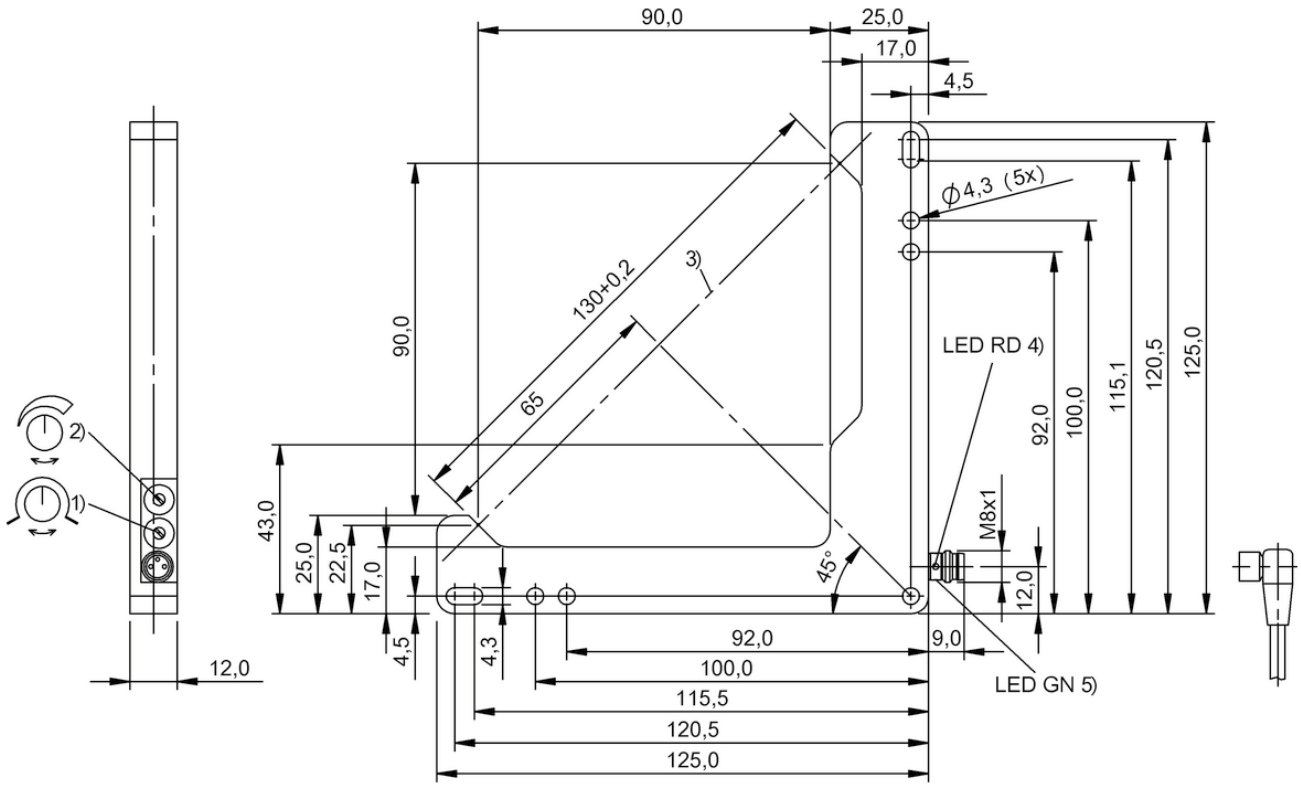

1) Light-on/dark-on, 2) Sensitivity, 3) Optical axis, 4) Output function, 5) Operating voltage

BWL0015

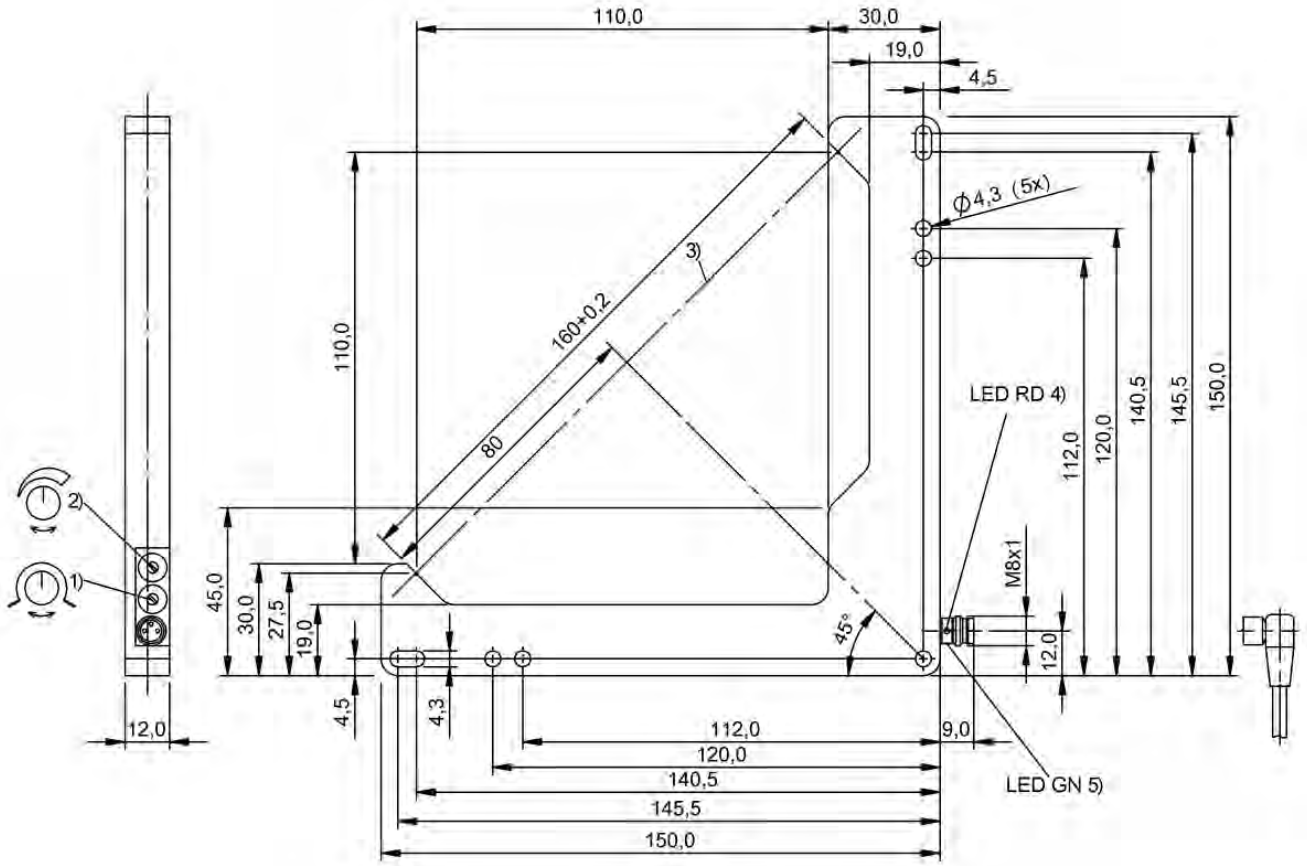

1) Light-on/dark-on, 2) Sensitivity, 3) Optical axis, 4) Output function, 5) Operating voltage

BWL0001

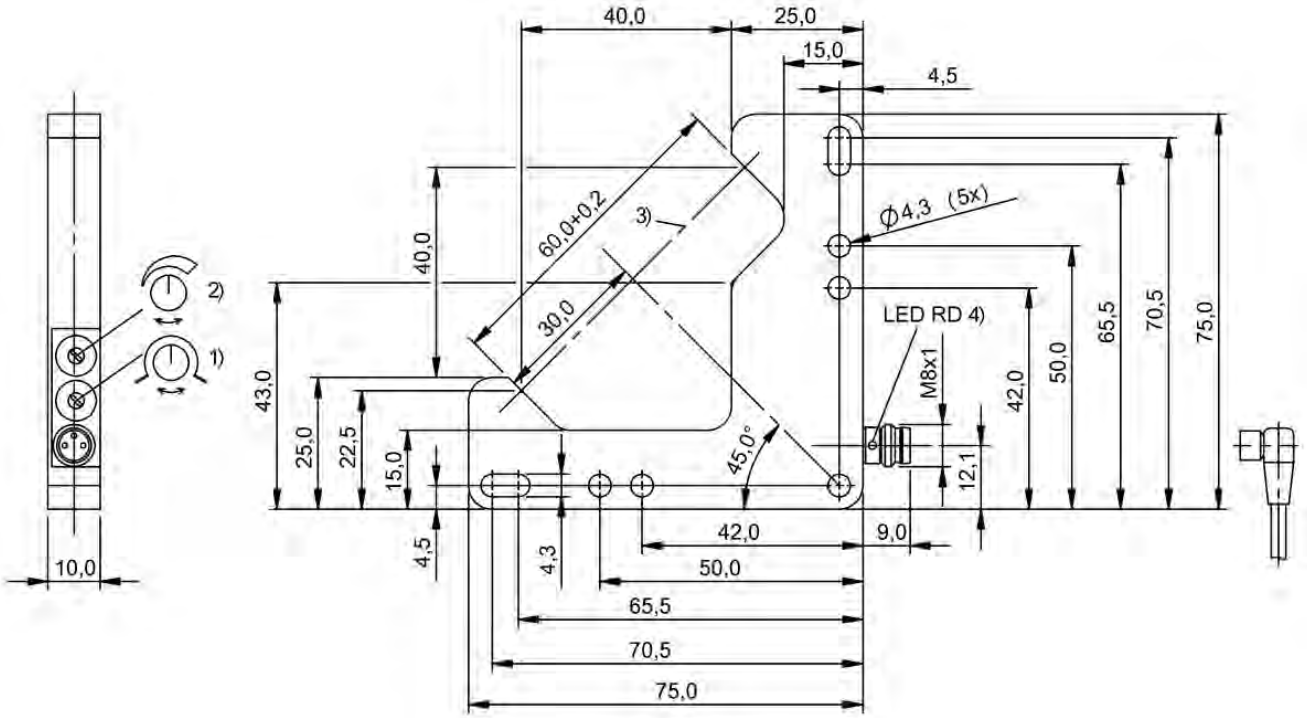

1) Light-on/dark-on, 2) Sensitivity, 3) Optical axis, 4) Output function

BWL000C, BWL000J, BWL000F

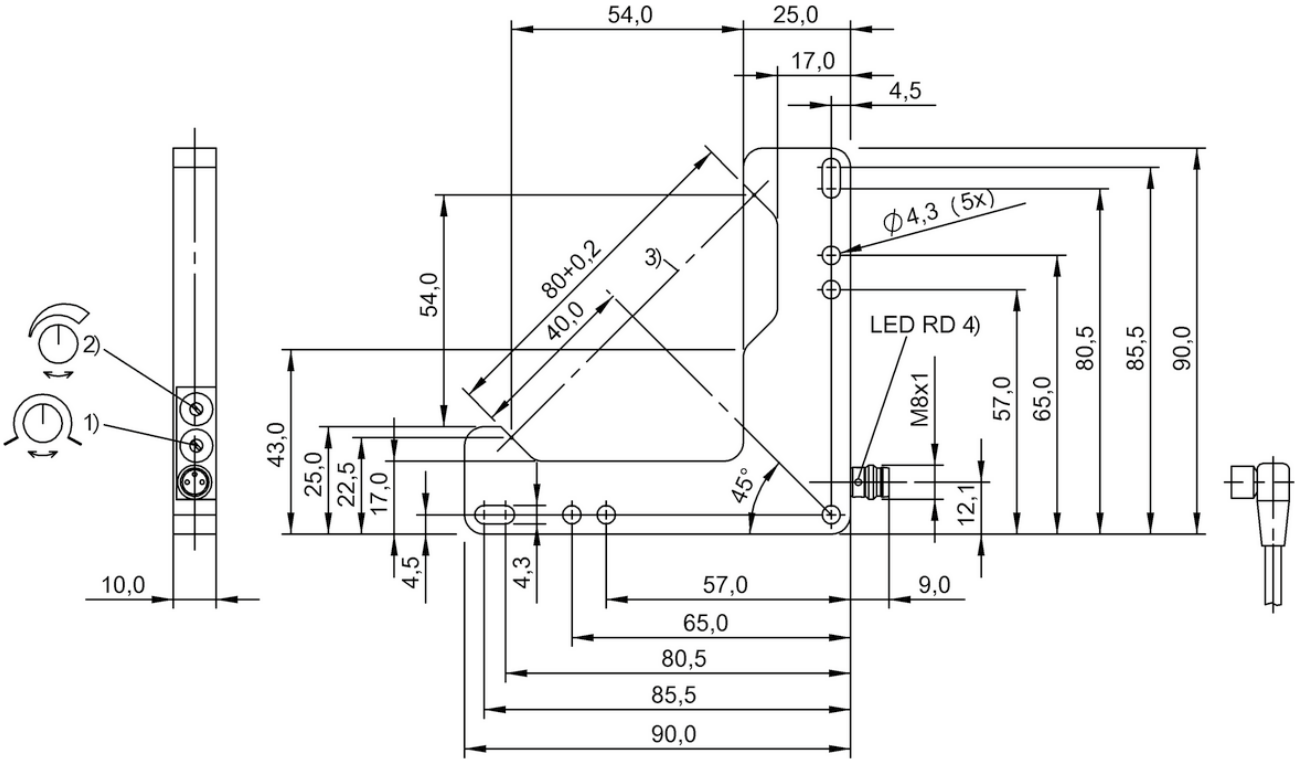

1) Light-on/dark-on, 2) Sensitivity, 3) Optical axis, 4) Output function

BWL000N, BWL000U, BWL000R

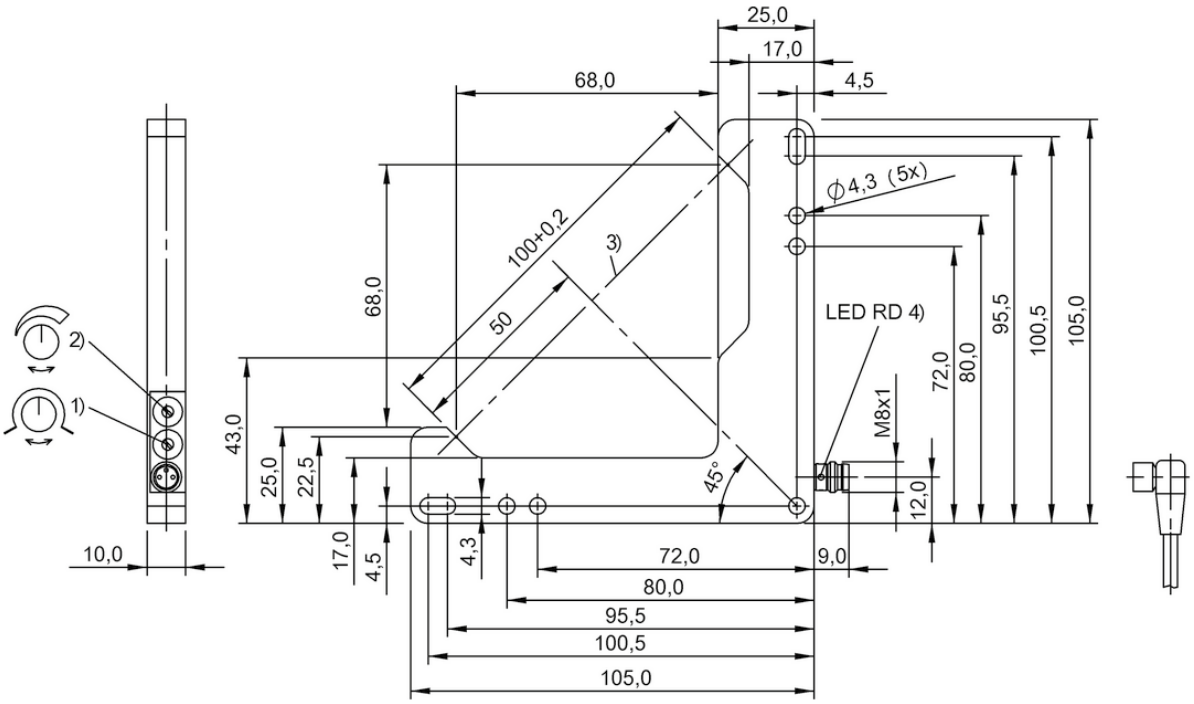

1) Light-on/dark-on, 2) Sensitivity, 3) Optical axis, 4) Output function

BWL0010, BWL001N, BWL0012

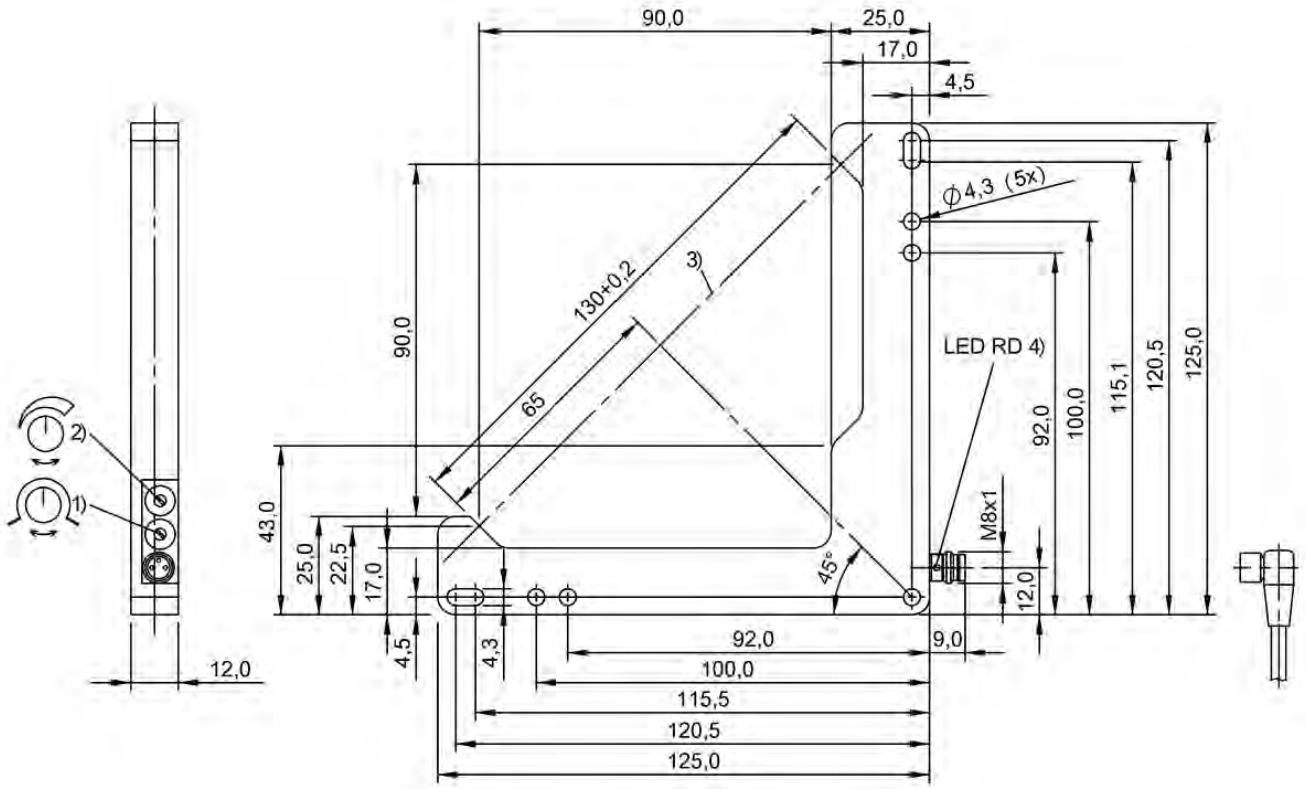

1) Light-on/dark-on, 2) Sensitivity, 3) Optical axis, 4) Output function

BWL0017, BWL001C, BWL0019

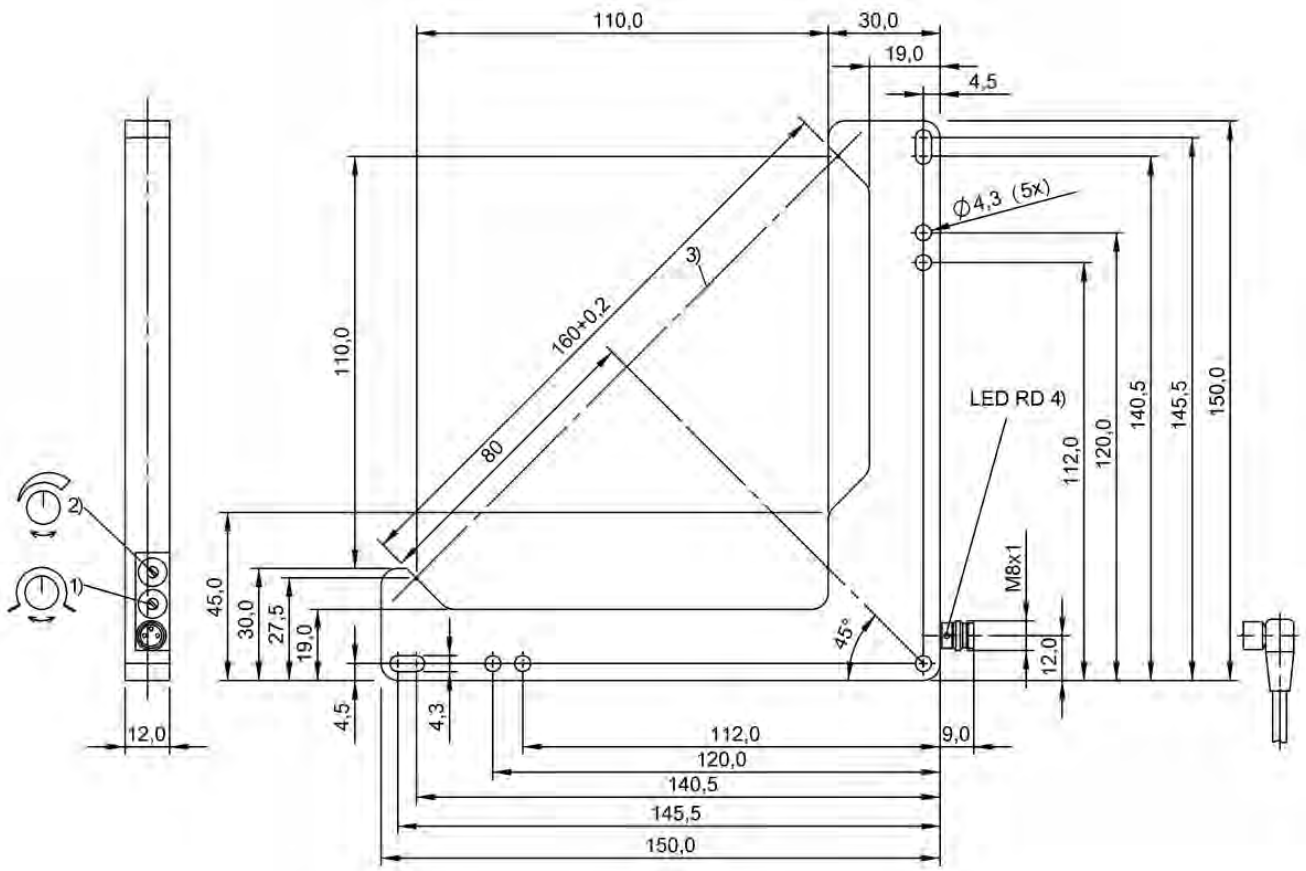

1) Light-on/dark-on, 2) Sensitivity, 3) Optical axis, 4) Output function

BWL0003, BWL0007, BWL0005

PNP dynamic normally open	**BOW001A** BOW A-0408-PS-C-S49	**BOW001J** BOW A-0808-PS-C-S49	**BOW0012** BOW A-1208-PS-C-S49	
NPN dynamic normally open				
PNP statisch normally open/normally closed, NPN statisch normally open/normally closed				
Series	A	A	A	
Dimension	18 x 90 x 140 mm	18 x 130 x 140 mm	18 x 170 x 140 mm	
Active window (PL x AL)	40 × 80 mm	80 × 80 mm	120 × 80 mm	
Principle of operation	Optical window sensor	Optical window sensor	Optical window sensor	
Principle of optical operation	Through-beam sensor	Through-beam sensor	Through-beam sensor	
Beam characteristic	Divergent	Divergent	Divergent	
Light type	Infrared	Infrared	Infrared	
Connection	Connector, M8x1 connector, 3-pin	Connector, M8x1 connector, 3-pin	Connector, M8x1 connector, 3-pin	
Housing material	Aluminum	Aluminum	Aluminum	
Material sensing surface	PMMA	PMMA	PMMA	
Operating voltage Ub	10...30 VDC	10...30 VDC	10...30 VDC	
Approval/Conformity	CE	CE	CE	
Productview	Page 492	Page 492	Page 493	

		BOW002H BOW A-1216-PS-C-S49		**BOW002J** BOW A-1616-PS-C-S49	
	BOW0029 BOW A-1216-NS-C-S49		**BOW002A** BOW A-1616-NS-C-S49		
					BOW002U BOW B-0404-DU-C-S75
	A	A	A	A	B
	18 x 170 x 220 mm	18 x 170 x 220 mm	18 x 210 x 220 mm	18 x 210 x 220 mm	15 x 90 x 104 mm
	120 × 160 mm	120 × 160 mm	160 × 160 mm	160 × 160 mm	40 × 40 mm
	Optical window sensor	Optical window sensor	Optical window sensor	Optical window sensor	Optical window sensor
	Through-beam sensor	Through-beam sensor	Through-beam sensor	Through-beam sensor	Through-beam sensor
	Divergent	Divergent	Divergent	Divergent	Divergent
	Infrared	Infrared	Infrared	Infrared	Infrared
	Connector, M8x1 connector, 3-pin	Connector, M8x1 connector, 3-pin	Connector, M8x1 connector, 3-pin	Connector, M8x1 connector, 3-pin	Connector, M8x1 connector, 4-pin
	Aluminum	Aluminum	Aluminum	Aluminum	Aluminum
	PMMA	PMMA	PMMA	PMMA	PMMA
	10...30 VDC	10...30 VDC	10...30 VDC	10...30 VDC	15...30 VDC
	CE	CE	CE	CE	CE, EAC
	Page 493	Page 493	Page 494	Page 494	Page 494

Do you need more details? Our Product Finder at www.balluff.com provides you with product-specific information, including technical drawings, data sheets, user guides and more for each individual product. All items are available for download.

PNP statisch normally open/normally closed, NPN statisch normally open/normally closed	**BOW002Y** BOW B-0808-DU-C-S75	**BOW0031** BOW B-1212-DU-C-S75	**BOW0034** BOW B-1616-DU-C-S75	
Series	B	B	B	
Dimension	15 x 130 x 134 mm	15 x 170 x 174 mm	15 x 210 x 214 mm	
Active window (PL x AL)	80 × 80 mm	120 × 120 mm	160 × 160 mm	
Principle of operation	Optical window sensor	Optical window sensor	Optical window sensor	
Principle of optical operation	Through-beam sensor	Through-beam sensor	Through-beam sensor	
Beam characteristic	Divergent	Divergent	Divergent	
Light type	Infrared	Infrared	Infrared	
Connection	Connector, M8x1 connector, 4-pin	Connector, M8x1 connector, 4-pin	Connector, M8x1 connector, 4-pin	
Housing material	Aluminum	Aluminum	Aluminum	
Material sensing surface	PMMA	PMMA	PMMA	
Operating voltage Ub	15...30 VDC	15...30 VDC	15...30 VDC	
Approval/Conformity	CE, EAC	CE, EAC	CE, EAC	
Productview	Page 495	Page 495	Page 496	

	BOW0037 BOW B-2020-DU-C-S75				
	B				
	15 x 250 x 244 mm				
	200 × 200 mm				
	Optical window sensor				
	Through-beam sensor				
	Divergent				
	Infrared				
	Connector, M8x1 connector, 4-pin				
	Aluminum				
	PMMA				
	15...30 VDC				
	CE, EAC				
	Page 496				

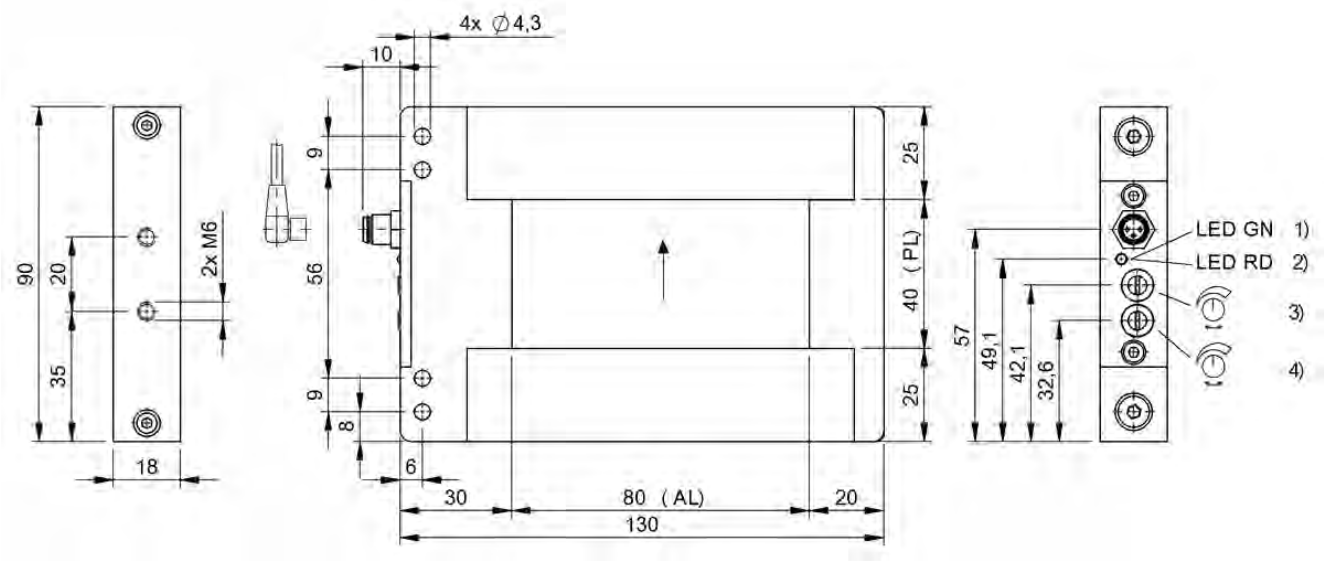

1) Power, 2) Output function, 3) Delay time, 4) Sensitivity

BOW001A

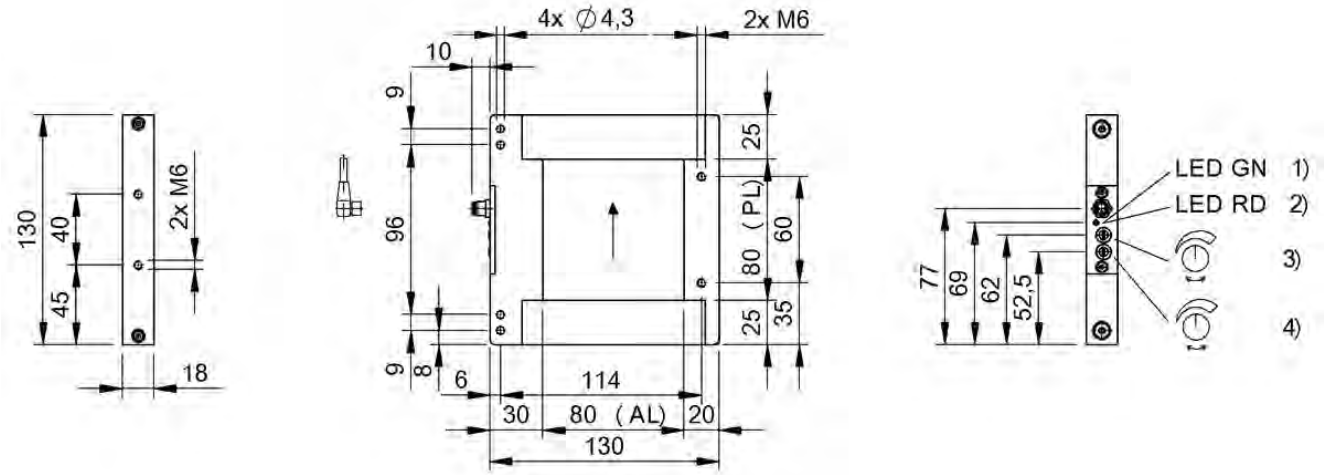

1) Power, 2) Output function, 3) Delay time, 4) Sensitivity

BOW001J

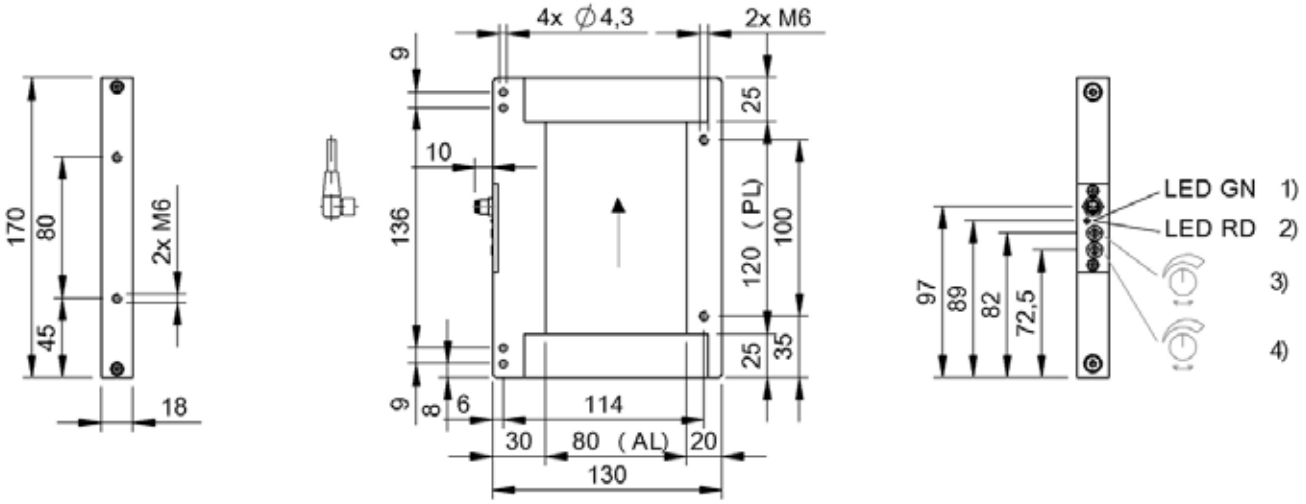

1) Power, 2) Output function, 3) Delay time, 4) Sensitivity

BOW0012

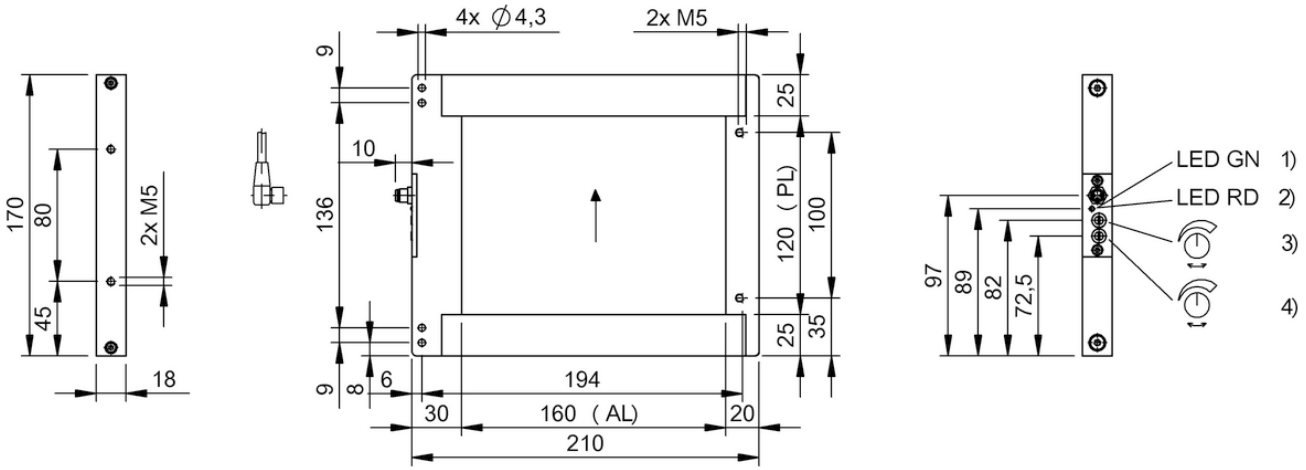

1) Power, 2) Output function, 3) Delay time, 4) Sensitivity

BOW0029, BOW002H

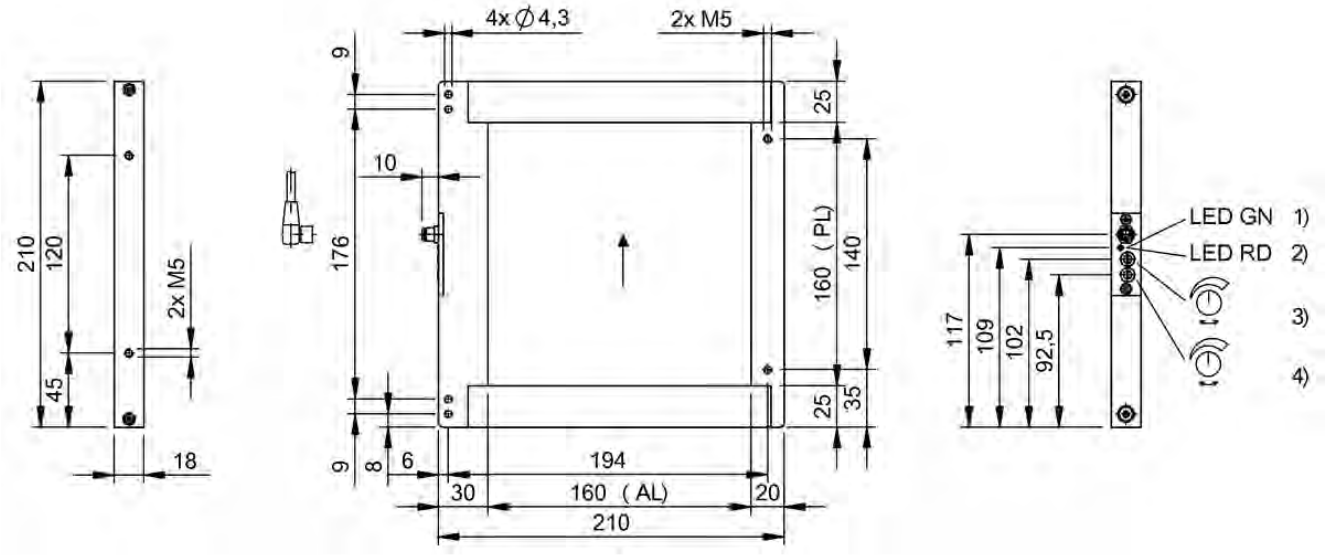

1) Power, 2) Output function, 3) Delay time, 4) Sensitivity

BOW002A, BOW002J

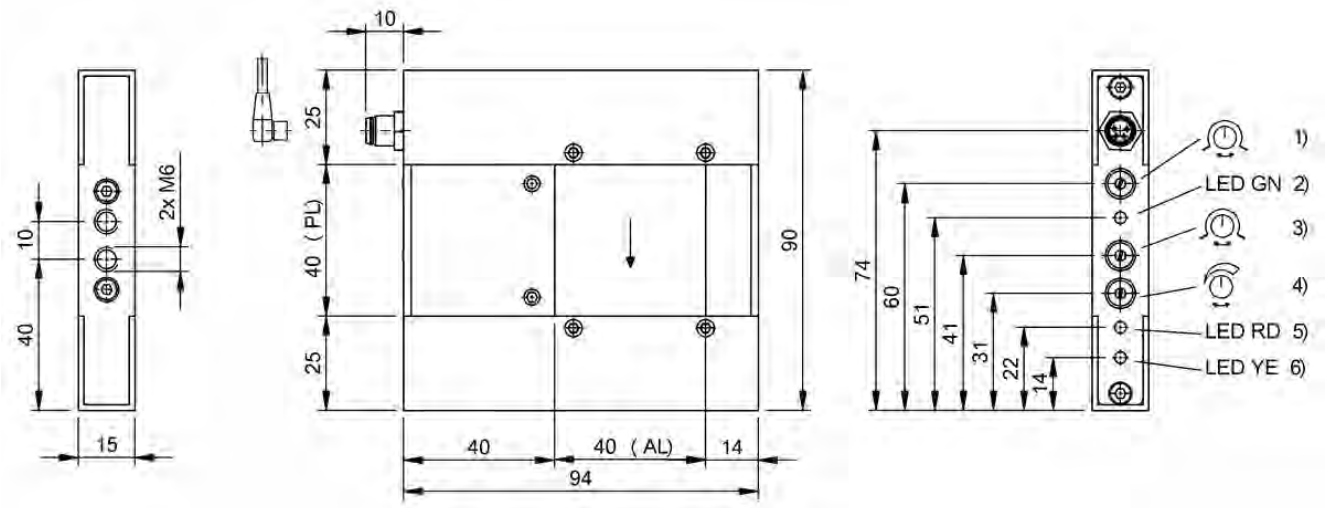

1) Pulse extender, 2) LED Power indicator, 3) Switching function, 4) Object resolution, 5) LED warning indicator, 6) LED function indicator, 7) Optical axis

BOW002U

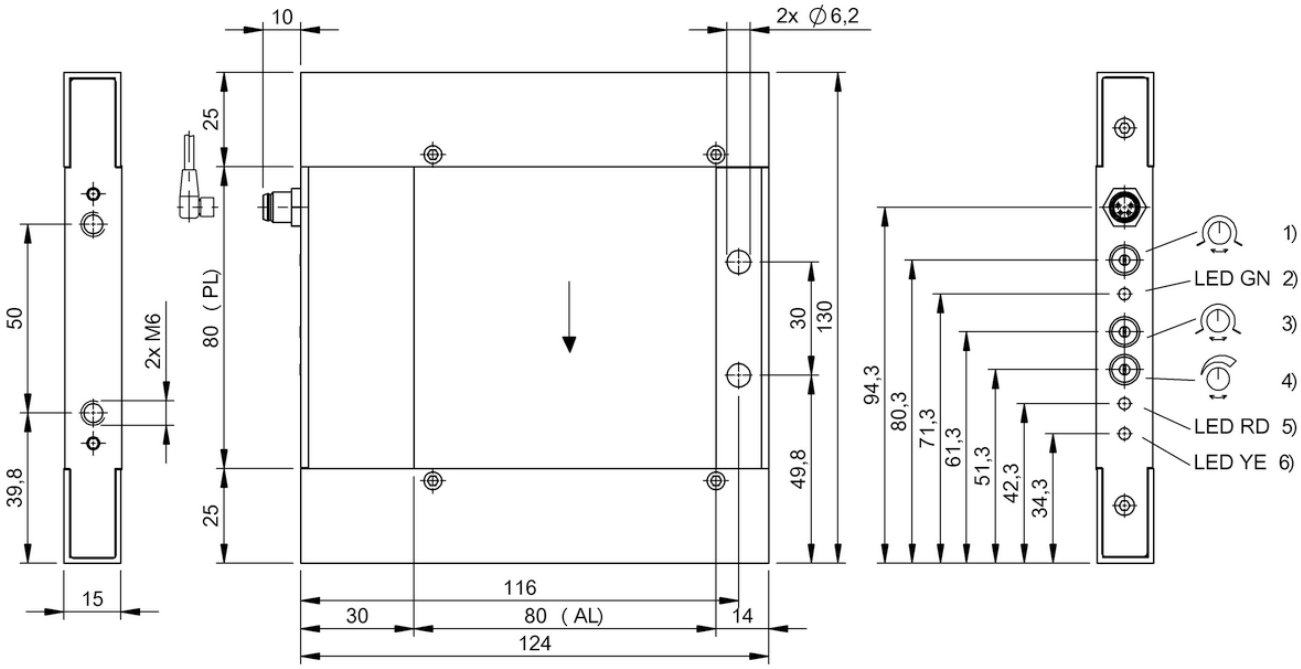

1) Pulse extender, 2) LED Power indicator, 3) Switching function, 4) Object resolution, 5) LED warning indicator, 6) LED function indicator, 7) Optical axis

BOW002Y

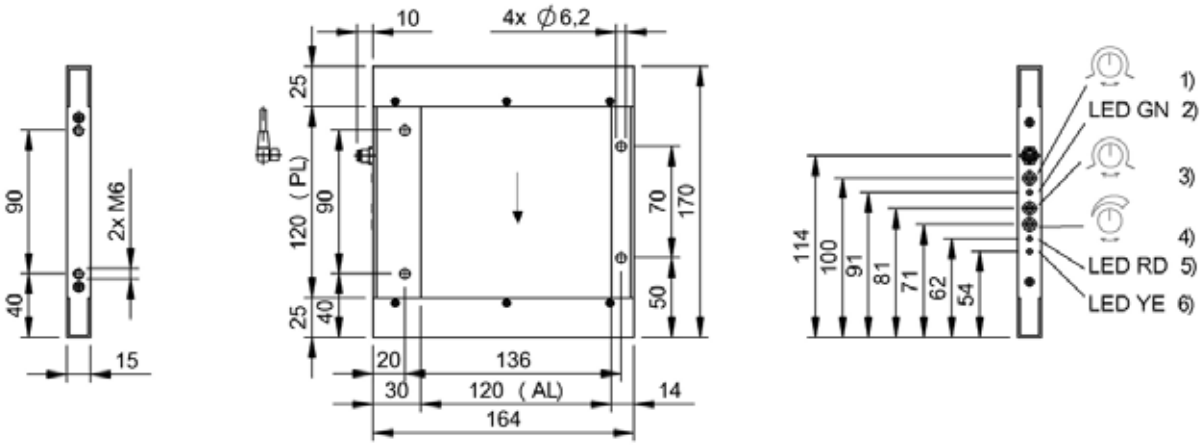

1) Pulse extender, 2) LED Power indicator, 3) Switching function, 4) Object resolution, 5) LED warning indicator, 6) LED function indicator, 7) Optical axis

BOW0031

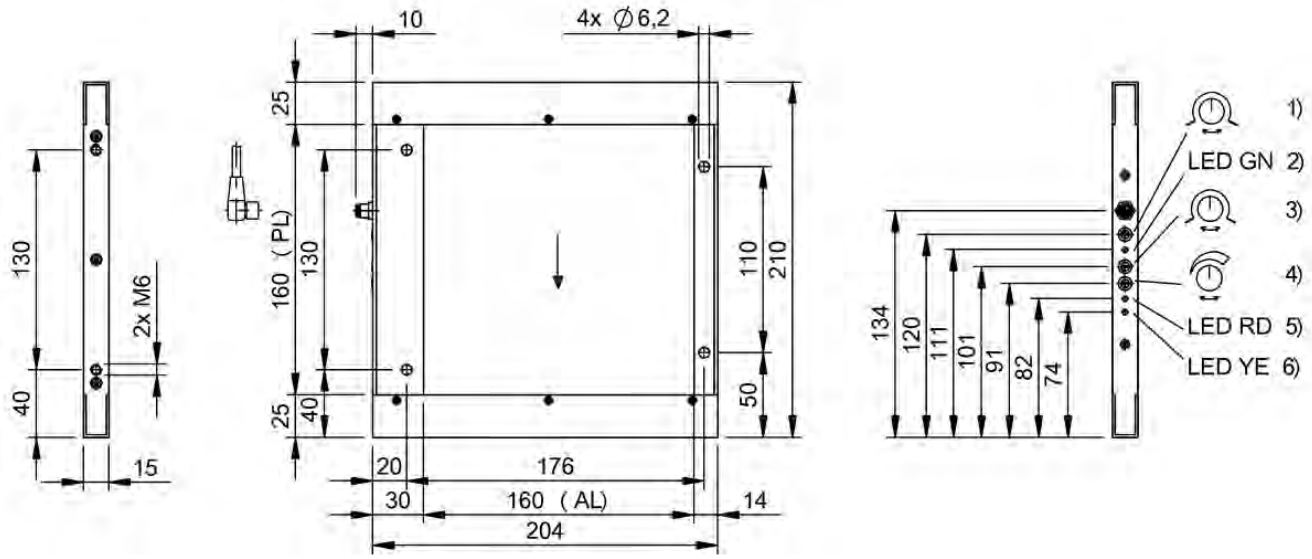

1) Pulse extender, 2) LED Power indicator, 3) Switching function, 4) Object resolution, 5) LED warning indicator, 6) LED function indicator, 7) Optical axis

BOW0034

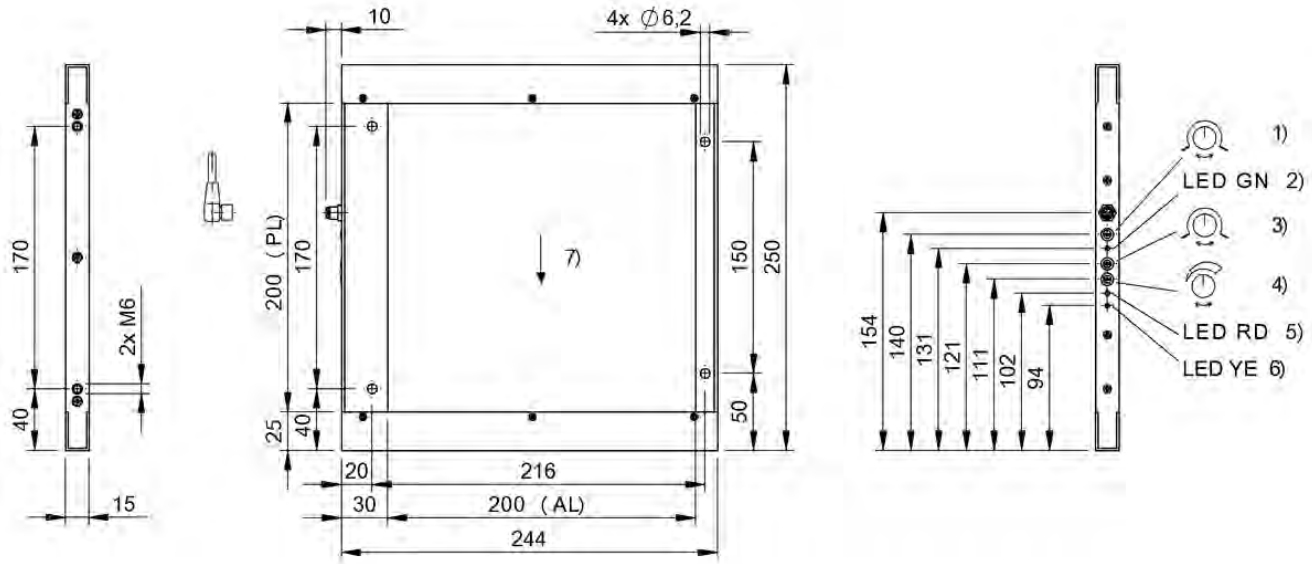

1) Pulse extender, 2) LED Power indicator, 3) Switching function, 4) Object resolution, 5) LED warning indicator, 6) LED function indicator, 7) Optical axis

BOW0037

	BLG0001 BLG 1-010-210-050-PV01-SX	
Series	1-010	
Dimension	22 x 150.1 x 43.2 mm	
Active length AL 1	100 mm	
Interface	Analog, voltage 0…10 V PNP Normally open (NO)	
Principle of operation	Light grid	
Principle of optical operation	Through-beam sensor	
Special optical feature	—	
Beam characteristic	Divergent	
Light type	Infrared	
Range	0...2.1 m	
Smallest part typ.	5.0 at t 0.5 x Sn, R 0 = 2.1 m	
Connection	Connector, M12x1 connector	
Housing material	Aluminum	
Material sensing surface	PMMA	
Operating voltage Ub	20...28 VDC	
Approval/Conformity	CE	
Productview	Page 500	

	BLG0002 BLG 1-010-210-070-PV01-SX	BLG0003 BLG 1-015-210-050-PV01-SX	BLG0005 BLG 1-030-210-070-PV01-SX
	1-010	1-015	1-030
	22 x 150.1 x 43.2 mm	22 x 200.1 x 43.2 mm	22 x 350.1 x 43.2 mm
	100 mm	150 mm	300 mm
	Analog, voltage 0…10 V PNP Normally open (NO)	Analog, voltage 0…10 V PNP Normally open (NO)	Analog, voltage 0…10 V PNP Normally open (NO)
	Light grid	Light grid	Light grid
	Through-beam sensor	Through-beam sensor	Through-beam sensor
	—	—	—
	Divergent	Divergent	Divergent
	Infrared	Infrared	Infrared
	0...2.1 m	0...2.1 m	0...2.1 m
	7.0 at t 0.5 x Sn, R0 = 2.1 m	5.0 at t 0.5 x Sn, R 0 = 2.1 m	7.0 at t 0.5 x Sn, R0 = 2.1 m
	Connector, M12x1 connector	Connector, M12x1 connector	Connector, M12x1 connector
	Aluminum	Aluminum	Aluminum
	PMMA	PMMA	PMMA
	20...28 VDC	20...28 VDC	20...28 VDC
	CE	CE	CE
	Page 500	Page 500	Page 501

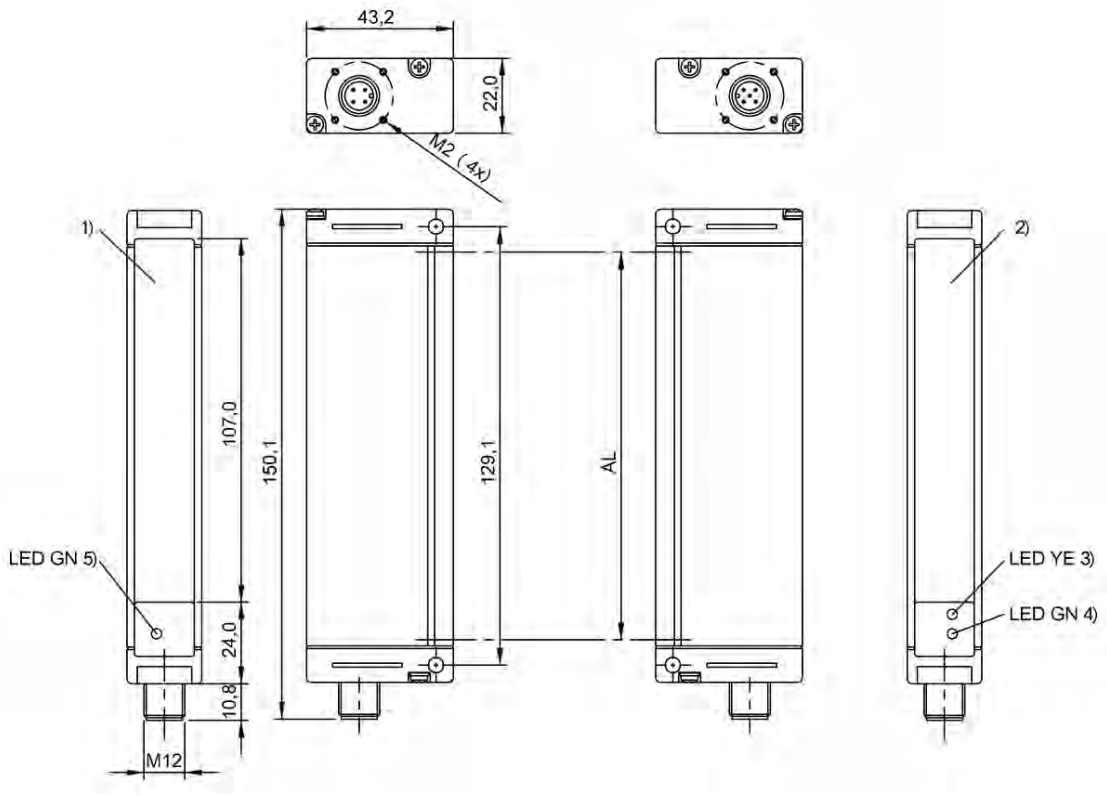

1) Sensing surface, 2) Sensing surface, 3) Output function, 4) stability/error, 5) Operating voltage

BLG0001, BLG0002

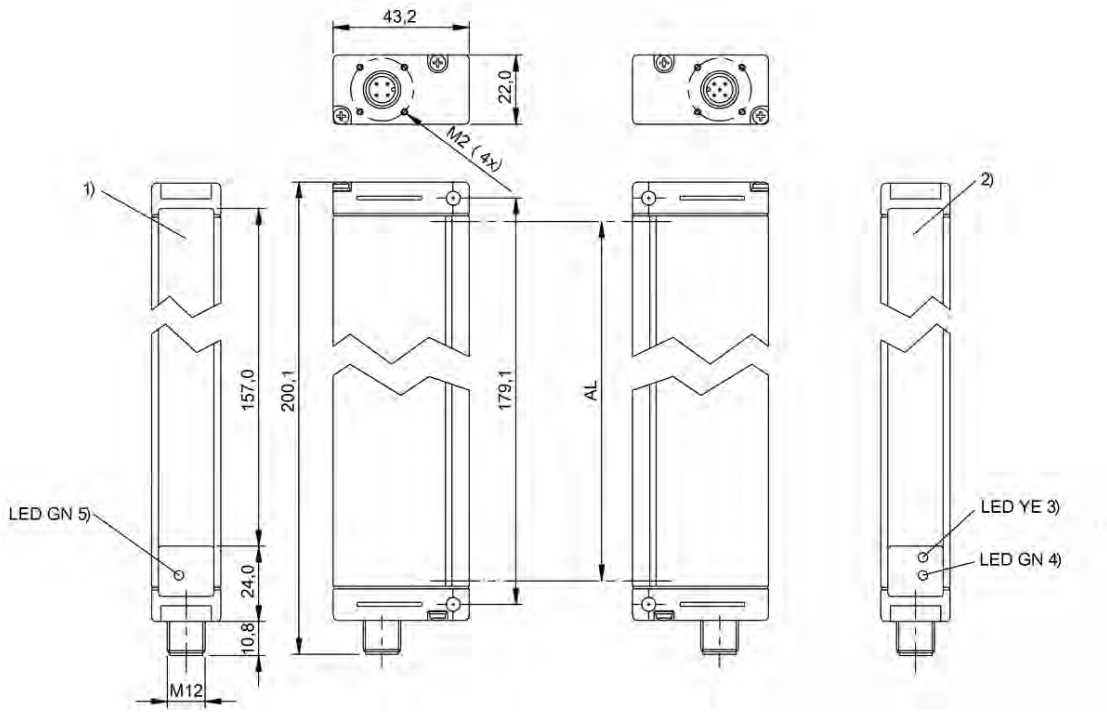

1) Sensing surface, 2) Sensing surface, 3) Output function, 4) stability/error, 5) Operating voltage

BLG0003

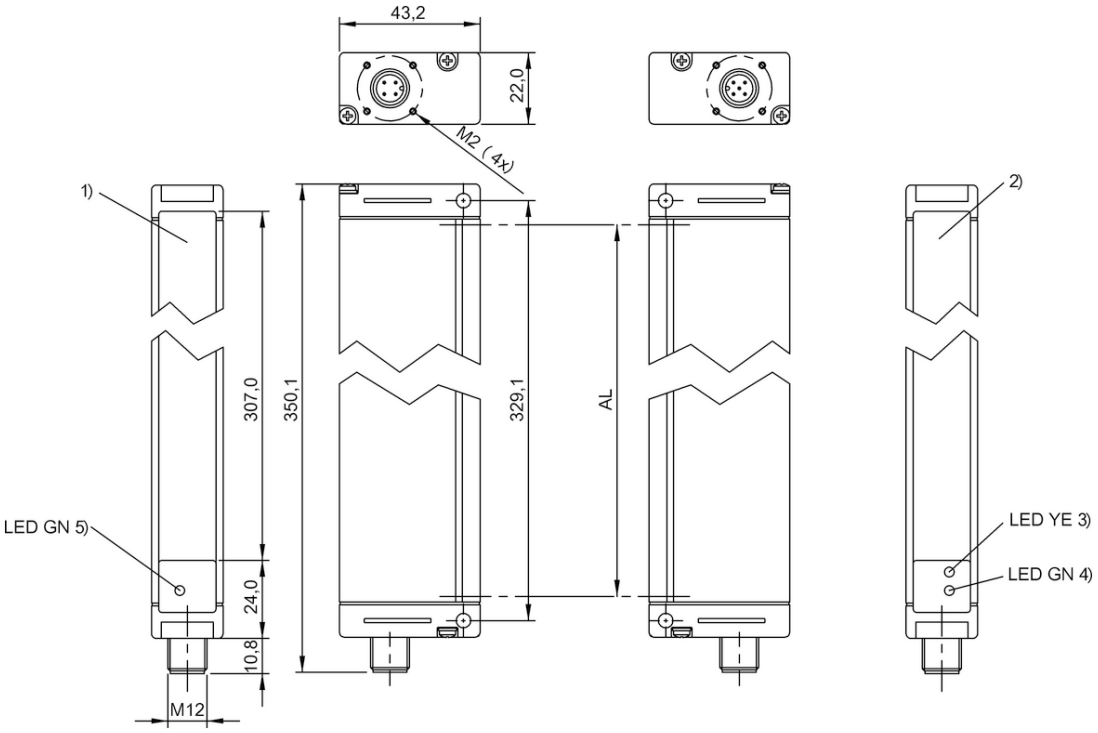

1) Sensing surface, 2) Sensing surface, 3) Output function, 4) stability/error, 5) Operating voltage

BLG0005

Do you need more details? Our Product Finder at www.balluff.com provides you with product-specific information, including technical drawings, data sheets, user guides and more for each individual product. All items are available for download.

	BLA0001 BLA 50A-001-S115	
Series	A	
Dimension	100 x 26 x 93 mm	
Interface	2x Analog, voltage/analog, current 0…10 V/4…20 mA 3x PNP Normally open (NO)	
Principle of operation	Light array	
Special optical feature	CCD technology	
Beam characteristic	Collimated light strip, width 54 mm	
Light type	Laser red light	
Range	0...2 m	
Connection 1	M12x1-Male, 4-pole, A-coded	
Connection 2	M12x1-Female, 4-pole, A-coded	
Connection 3	M12x1-Male, 8-pole, A-coded	
Housing material	Aluminum	
Operating voltage Ub	15...30 VDC	
Approval/Conformity	CE	
Productview	Page 504	

	BLA0003 BLA 50A-002-S4	
	A	
	100 x 27 x 93 mm	
	IO-Link 1.1	
	Light array	
	CCD technology	
	Collimated light strip, width 54 mm	
	Laser red light	
	0...2 m	
	M12x1-Male, 4-pole	
	M12x1-Female, 4-pole	
	M12x1-Male, 4-pole	
	Aluminum	
	18...30 VDC	
	CE	
	Page 504	

Do you need more details? Our Product Finder at www.balluff.com provides you with product-specific information, including technical drawings, data sheets, user guides and more for each individual product. All items are available for download.

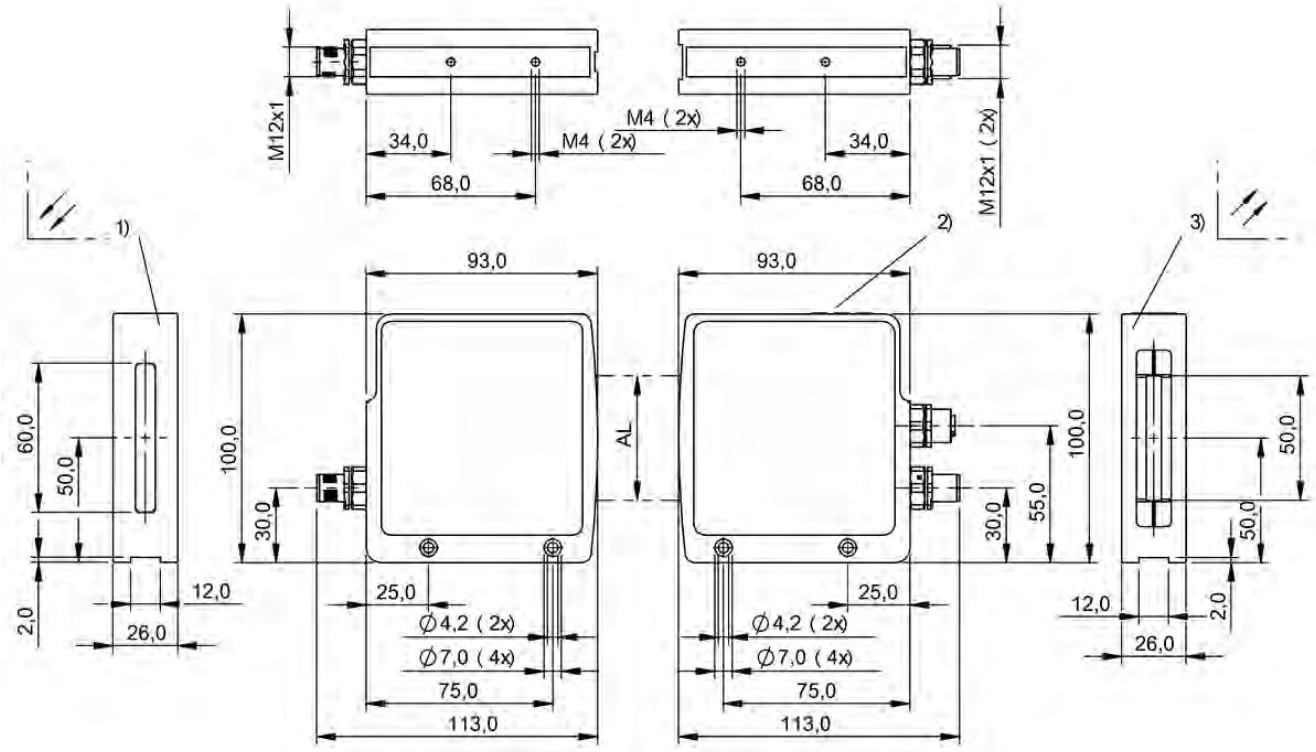

1) Emitter, 2) Display and control panel, 3) Receiver

BLA0001, BLA0003

	BFS0001 BFS 26K-PS-L01-S115	
Series	26K	
Dimension	17 x 50 x 50 mm	
Interface	3x PNP normally open (NO)	
Input function	Emitter on/off, Key disable on/off, Teach color (switchpoint)	
Principle of operation	Color sensor	
Principle of optical operation	Diffuse sensor, fixed focus	
Beam characteristic	Focused	
Light type	White light	
Light spot size	Ø 4 mm at 22 mm	
Range	12...32 mm	
Connection	Connector, M12x1 connector, 8-pin	
Housing material	ABS	
Material sensing surface	PMMA	
Operating voltage Ub	12...28 VDC	
Approval/Conformity	CE, cULus, EAC	
Productview	Page 508	

	BFS000M BFS 33M-GSI-F01-S75	BFS000L BFS 33M-GSS-F01-PU-02	
	33M	33M	
	21 x 58.3 x 58 mm	21 x 58.3 x 74 mm	
	IO-Link 1.1 2x NO/NC	3x PNP/NPN normally open/normally closed (NO/NC)	
	—	—	
	Color sensor	Color sensor	
	Diffuse sensor	—	
	—	—	
	White light	White light	
	—	—	
	—	—	
	Connector, M8x1 connector, 4-pin	Cable, 2.00 m, PUR	
	Aluminum	Aluminum	
	—	—	
	21.6...26.4 VDC	21.6...26.4 VDC	
	CE	CE	
	Page 508	Page 509	

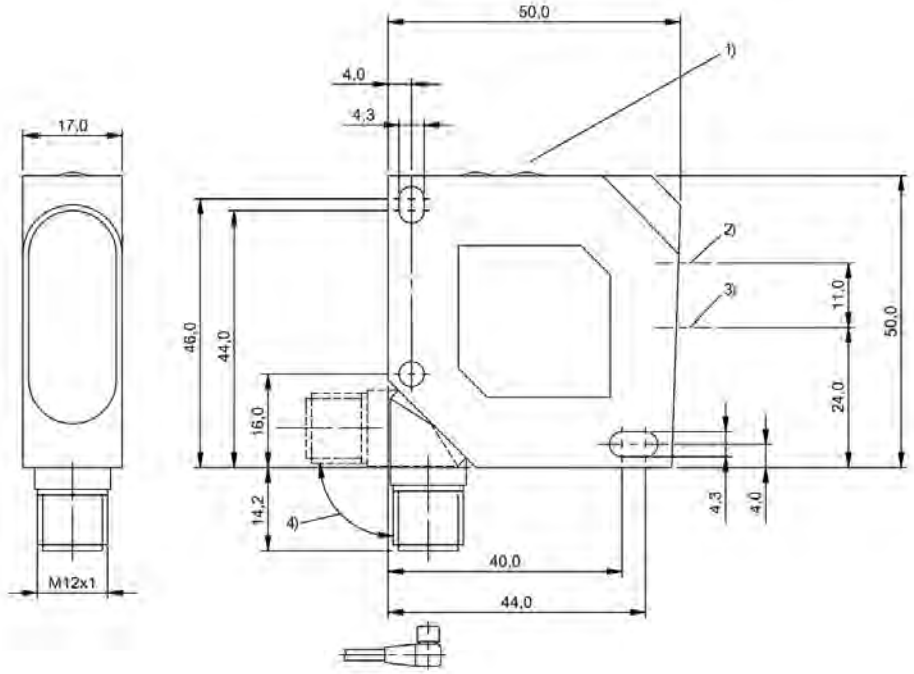

1) Display and control panel, 2) Optical axis emitter, 3) Optical axis receiver, 4) rotatable 270°

BFS0001

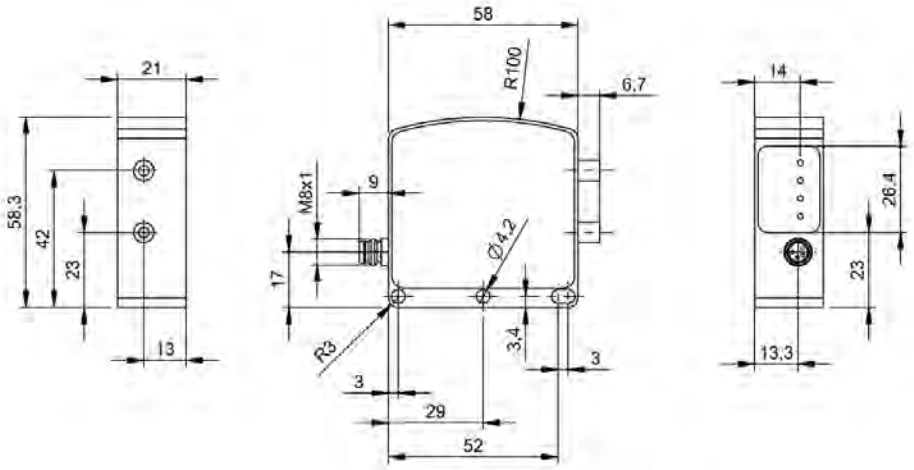

BFS000M

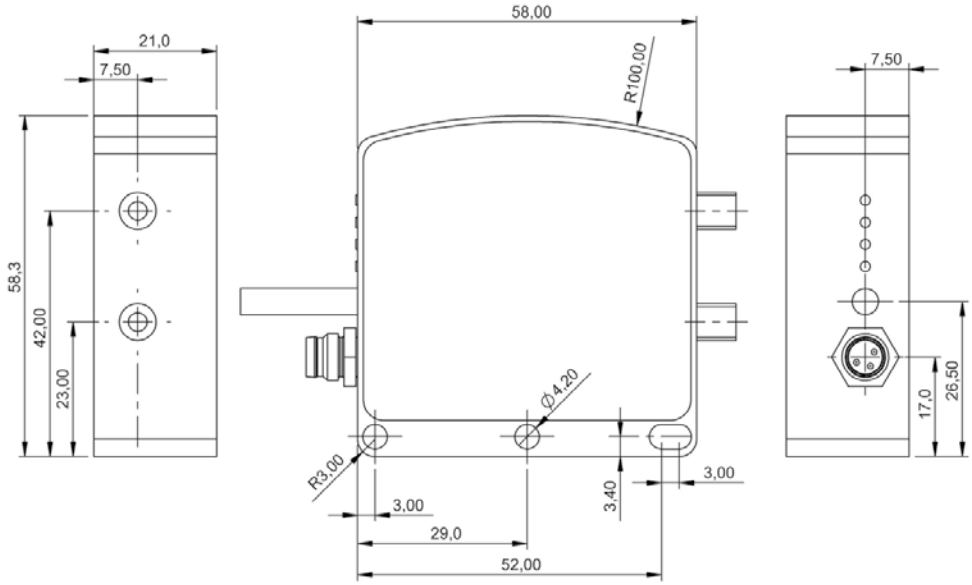
58,00
21,0
7,50
R100,00
7,50
58,3
42,00
23,00
Ø4,20
17,0
26,50
R3,00
3,00
3,40
3,00
29,0
52,00

BFS000L

PNP normally open, PNP normally closed	**BKT000H** BKT 18KF-001-P-S4			
PNP normally open/normally closed		**BKT0010** BKT 6K-002-P-S75	**BKT000Y** BKT 21M-002-P-S4	
PNP/NPN normally open/normally closed, analog, voltage 1...5.5 V				
PNP/NPN normally open/normally closed				
Series	18KF	6K	21M	
Dimension	Ø 18 x 81.5 mm	12 x 41.5 x 21.6 mm	12 x 50 x 42.5 mm	
Input function	—	Key disable on/off, Same function as button	Key disable on/off, Teach Contrast (switching point)	
Principle of operation	Contrast sensor	Contrast sensor	Contrast sensor	
Principle of optical operation	Diffuse sensor, Focused	Diffuse sensor, Focused	Diffuse sensor, Focused	
Special optical feature	—	—	Coaxial Optics	
Beam characteristic	Focused	Focused	Focused	
Light type	White light	Laser red light	White light	
Light spot size	Ø 4.5 mm at 10 mm	0.7 x 0.7 mm at 250 mm	Ø 3.5 mm at 19 mm	
Range	8...12 mm	1...250 mm	17...21 mm	
Connection	Connector, M12x1 connector, 4-pin	Connector, M8x1 connector, 4-pin	Connector, M12x1 connector, 4-pin	
Housing material	PBT	ABS	Zinc, die-cast Aluminum	
Material sensing surface	PMMA	PMMA	Glass	
Operating voltage Ub	10...30 VDC	10...30 VDC	10...30 VDC	
Approval/Conformity	CE, cULus	cULus, CE, EAC	cULus, CE, EAC	
Productview	Page 512	Page 512	Page 513	

	BKT0003 BKT 67M-003-U-S92			**BKT0001** BKT 67M-001-U-S92
		BKT0005 BKT 67M-005-U-S92	**BKT0006** BKT 67M-006-U-S92	
	67M	67M	67M	67M
	32 x 64 x 82 mm	32 x 64 x 82 mm	32 x 64 x 82 mm	32 x 64 x 82 mm
	Same function as SET button	Same function as SET button	Same function as SET button	Time function on/off
	Contrast sensor	Contrast sensor	Contrast sensor	Contrast sensor
	Diffuse sensor, Focused	Diffuse sensor, Focused	Diffuse sensor, Focused	Diffuse sensor, Focused
	—	—	—	—
	Focused	Focused	Focused	Focused
	blue light/green light/ red light	blue light/green light/ red light	blue light/green light/ red light	blue light/green light/ red light
	1.5 x 5 mm at 9 mm	1.5 x 5 mm at 9 mm	5 x 1.5 mm at 9 mm	1.5 x 5 mm at 9 mm
	6...12 mm	6...12 mm	6...12 mm	6...12 mm
	Connector, M12x1 connector	Connector, M12x1 connector	Connector, M12x1 connector	Connector, M12x1 connector
	Aluminum, die-cast	Aluminum, die-cast	Aluminum, die-cast	Aluminum, die-cast
	Glass	Glass	Glass	PMMA
	10...30 VDC	10...30 VDC	10...30 VDC	10...30 VDC
	CE, cULus	CE, cULus	CE, cULus	CE, cULus
	Page 513	Page 514	Page 514	Page 514

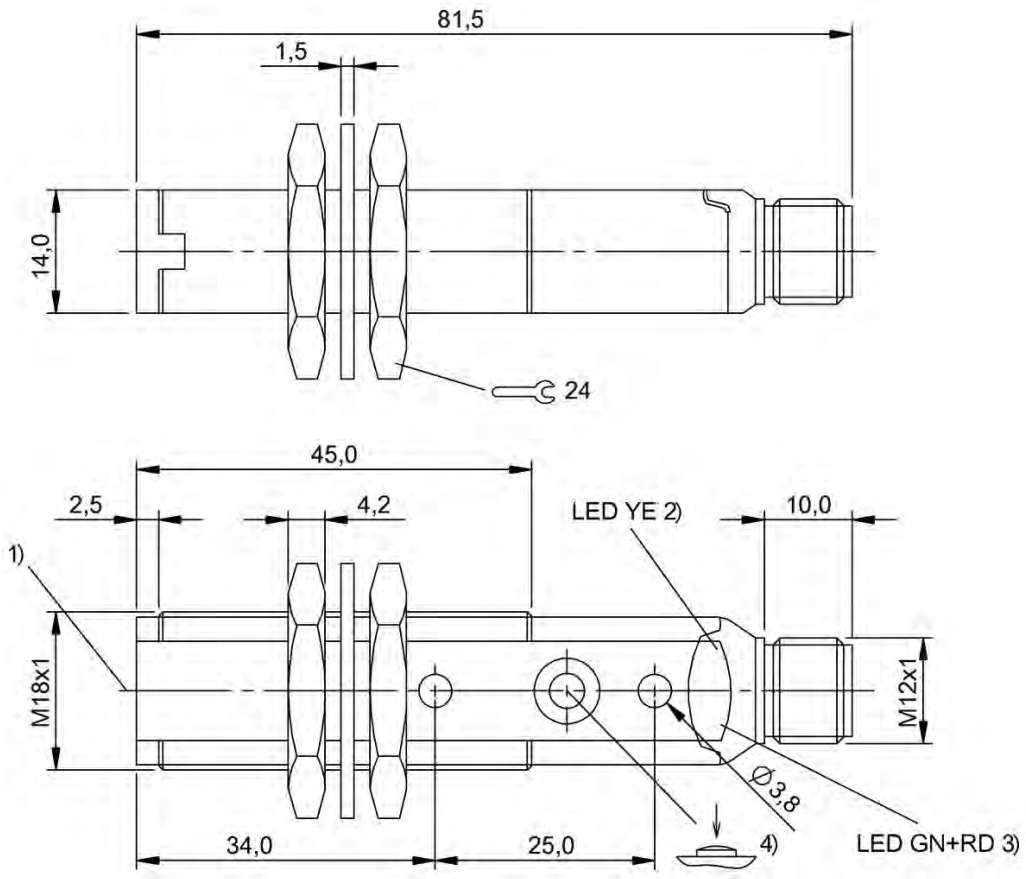

1) Optical axis, 2) Output function, 3) stability/error, 4) Sn

BKT000H

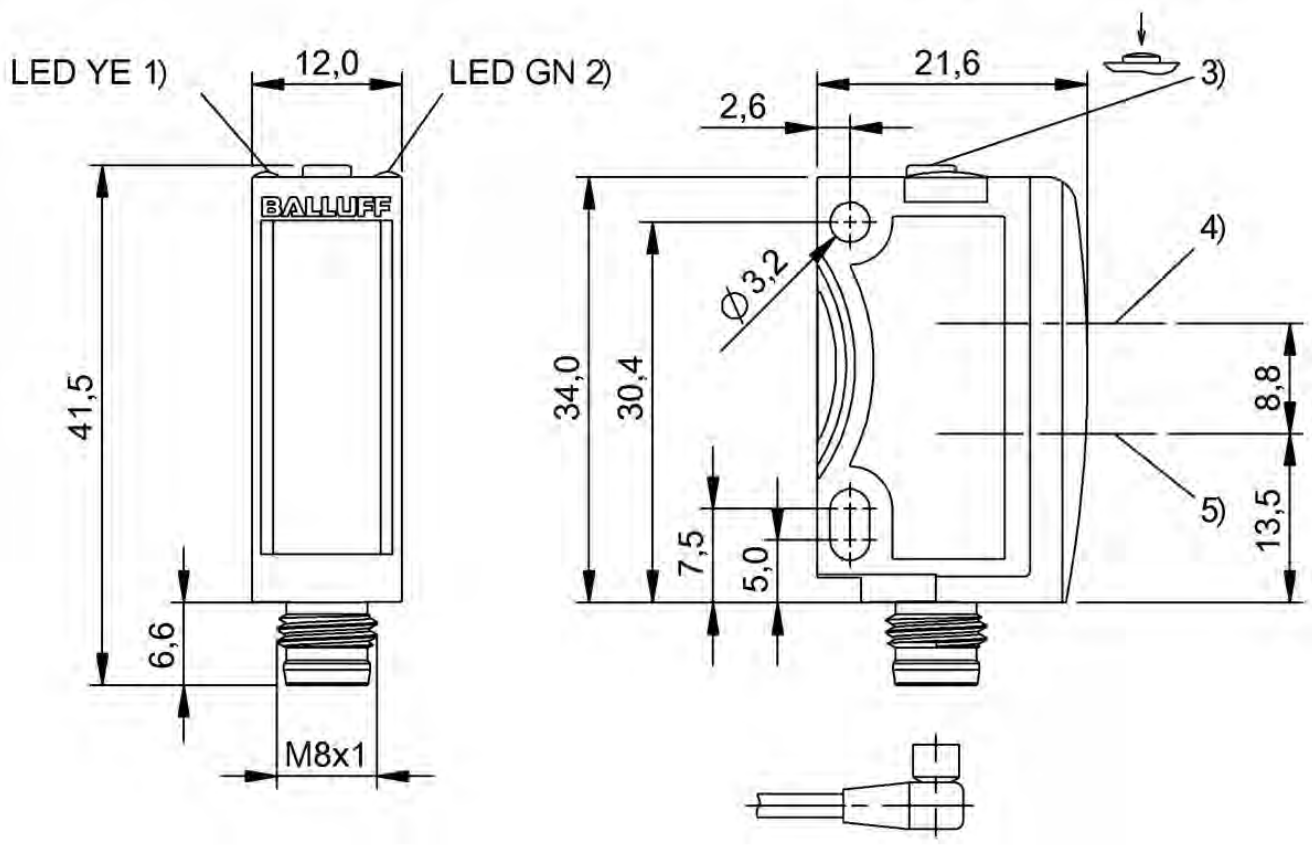

1) Output function, 2) Operating voltage, 3) Sensitivity, light/dark, 4) Optical axis receiver, 5) Optical axis emitter

BKT0010

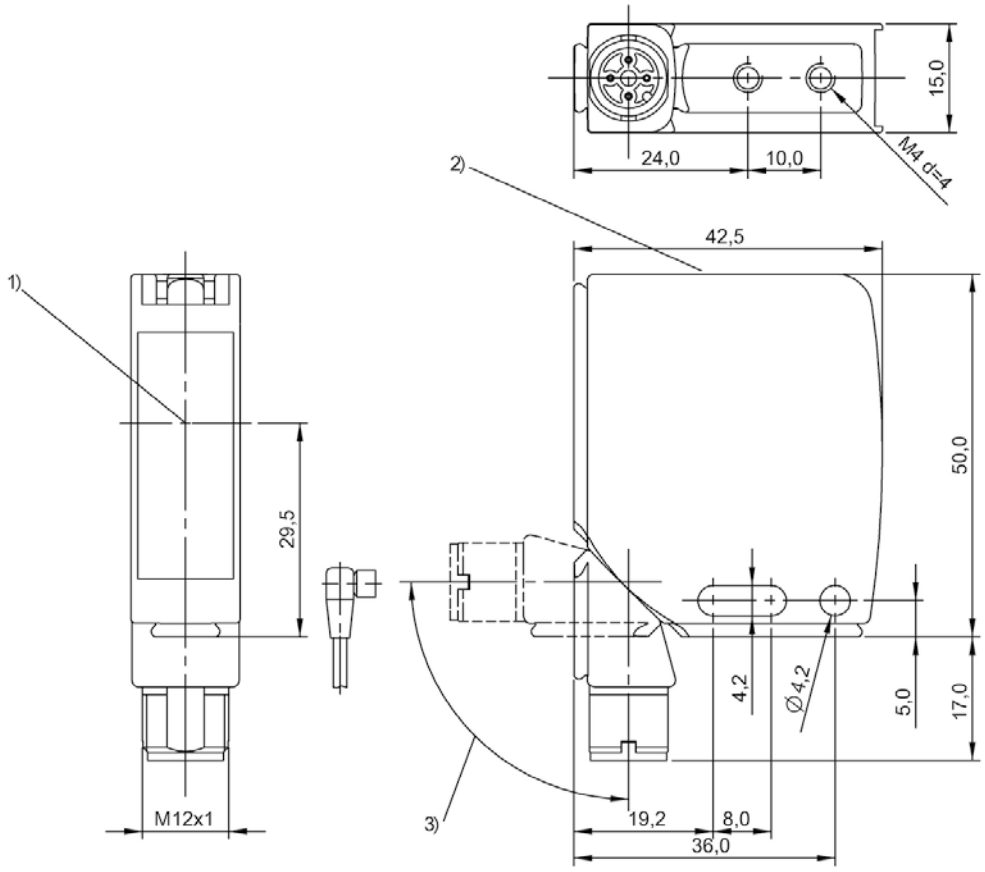

1) Optical axis, 2) Display and control panel, 3) rotatable 270°

BKT000Y

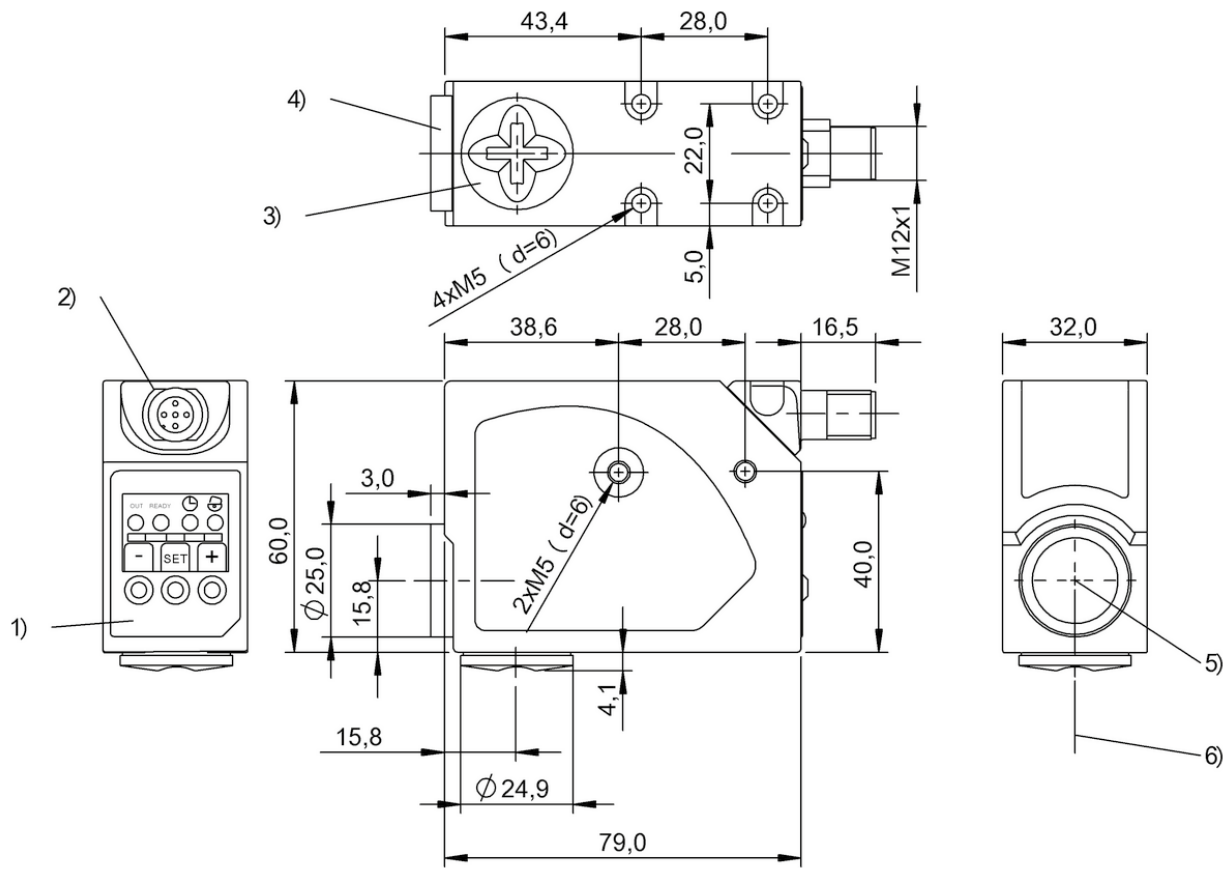

1) Display and control panel, 2) rotatable 270°, 3) Cover cap, removable, 4) standard lens, removable, 5) Light exit standard, 6) Light exit optional

BKT0003

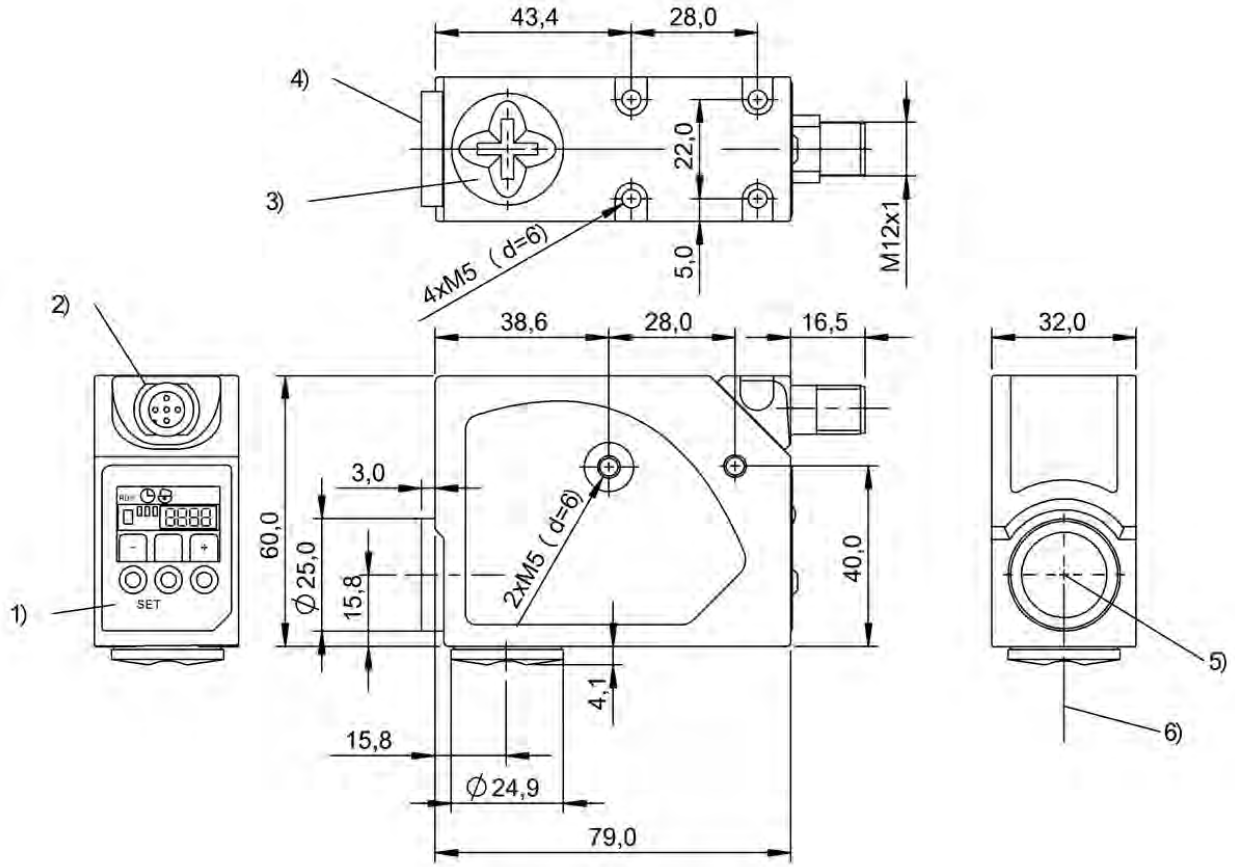

1) Display and control panel, 2) rotatable 270°, 3) Cover cap, removable, 4) standard lens, removable, 5) Light exit standard, 6) Light exit optional

BKT0005, BKT0006

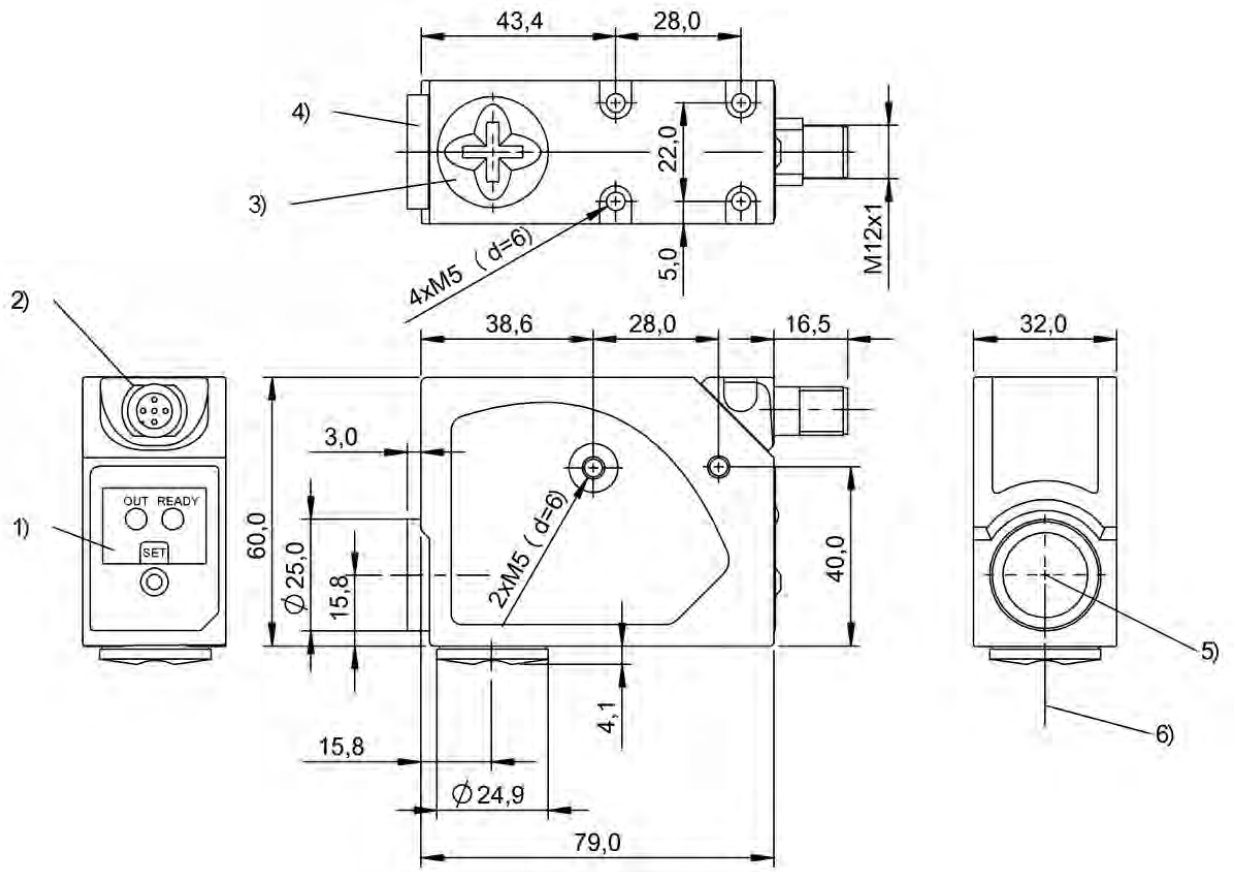

1) Display and control panel, 2) rotatable 270°, 3) Cover cap, removable, 4) standard lens, removable, 5) Light exit standard, 6) Light exit optional

BKT0001

PNP normally open/normally closed	**BLT0009** BLT 21M-001-P-S4
Series	21M
Dimension	12 x 50 x 42.5 mm
Input function	Key disable on/off, Teach Contrast (switching point)
Principle of operation	Luminescence sensor
Principle of optical operation	Diffuse sensor, Focused
Special optical feature	Coaxial Optics
Beam characteristic	Focused
Light type	Ultraviolet light
Light spot size	Ø 1.5 mm at 10 mm
Range	0...40 mm
Connection	Connector, M12x1 connector, 4-pin
Housing material	Zinc, die-cast Aluminum
Material sensing surface	Glass
Operating voltage Ub	10...30 VDC
Approval/Conformity	cULus, CE

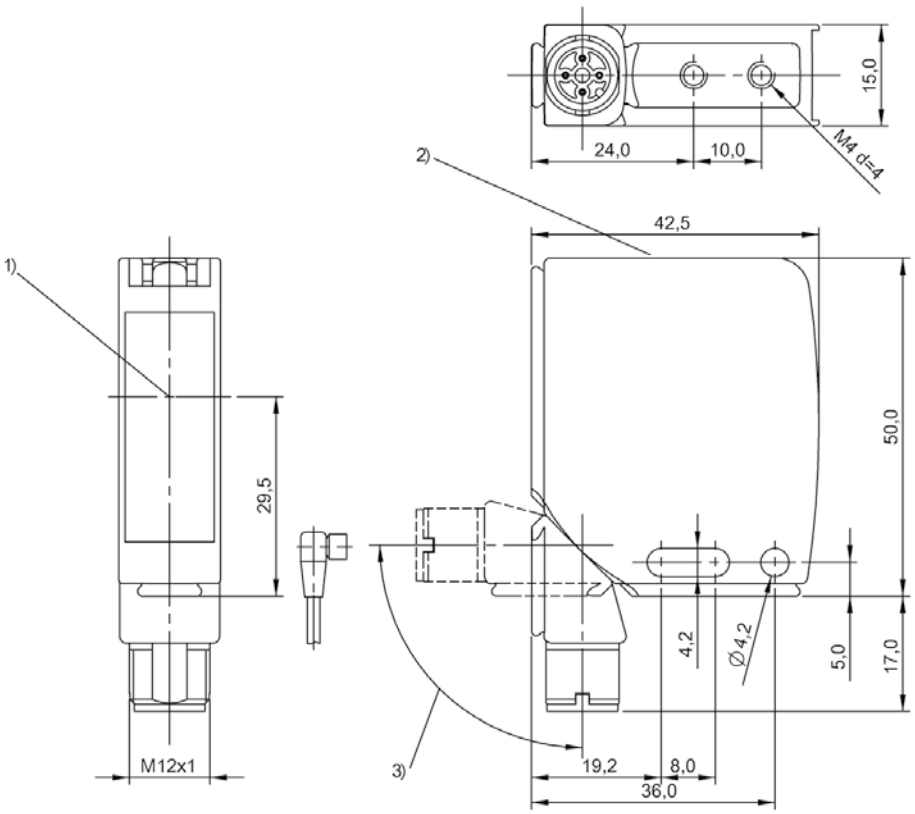

1) Optical axis, 2) Display and control panel, 3) rotatable 270°

BLT0009

2 × PNP normally open/normally closed			
PNP normally open/normally closed		**BFB0006** BFB 75K-002-P-S75	
PNP normally open/normally closed, analog, voltage 0...10 V	**BFB0008** BFB 75K-003-P-02		
Series	75K	75K	
Dimension	10.4 x 35.4 x 79.3 mm	10.4 x 35.4 x 84 mm	
Principle of operation	Fiber optic device	Fiber optic device	
Input function	Teach Sn, Key disable on/off	Teach Sn, Key disable on/off	
Setting	Rated switching distance (Sn), 2 values, Duration of single pulse, Mode normal/fine/fast/far, LCD read direction, Time function, Factory setting (Reset), display on/off, Delay time, Key disable on/off, Light-on/dark-on, Sensitivity (Sn)	LCD read direction, Time function, Factory setting (Reset), Mode normal/fine/fast/far, Duration of single pulse, Rated switching distance (Sn), 2 values, display on/off, Delay time, Key disable on/off, Light-on/dark-on, Sensitivity (Sn)	
Operating voltage Ub	—	10...30 VDC	
Light type	LED, red light	LED, red light	
Connection	Cable, 2.00 m, PVC	Connector, M8x1 connector, 4-pin	
Housing material	ABS	ABS	
Switching frequency	8000 Hz /1000 Hz/125 Hz	8000 Hz /1000 Hz/125 Hz	
Approval/Conformity	cULus, CE	cULus, CE	
Productview	Page 522	Page 522	

			BFB000C BFB M18M-011-P-S4	**BFB000E** BFB M18M-012-P-S4
	BFB0003 BFB 75K-001-P-02	**BFB0004** BFB 75K-001-P-S75		
	75K	75K	18M	18M
	10.4 x 35.4 x 79.3 mm	10.4 x 35.4 x 84 mm	Ø 18 x 75 mm	Ø 18 x 75 mm
	Fiber optic device	Fiber optic device	Photoelectric sensor	Photoelectric sensor
	Key disable on/off, Same function as button	Same function as button, Key disable on/off	—	—
	Factory setting (Reset), Light-on/dark-on, Sensitivity (Sn)	Light-on/dark-on, Factory setting (Reset), Sensitivity (Sn)	Sensitivity (Sn)	Sensitivity (Sn)
	10...30 VDC	10...30 VDC	10...30 VDC	10...30 VDC
	LED, red light	LED, red light	LED infrared	LED infrared
	Cable, 2.00 m, PVC	Connector, M8x1 connector, 4-pin	Connector-plug, 4-pin	Connector-plug, 4-pin
	ABS	ABS	Brass	Brass
	1500 Hz	1500 Hz	1000 Hz	3000 Hz
	cULus, CE, EAC	CE, cULus, EAC	CE, EAC, cULus, DC, Code 81U2	CE, EAC, cULus, DC, Code 81U2
	Page 522	Page 522	Page 522	Page 522

2 × PNP normally open/normally closed	**BFB0009** BFB M18M-001-P-S4	**BFB000A** BFB M18M-002-P-S4	
PNP normally open, PNP normally closed			
Series	18M	18M	
Dimension	Ø 18 x 75 mm	Ø 18 x 75 mm	
Principle of operation	Photoelectric sensor	Photoelectric sensor	
Input function	—	—	
Setting	Sensitivity (Sn)	Sensitivity (Sn)	
Operating voltage Ub	10...30 VDC	10...30 VDC	
Light type	LED, red light	LED, red light	
Connection	Connector-plug, 4-pin	Connector-plug, 4-pin	
Housing material	Brass	Brass	
Switching frequency	1000 Hz	3000 Hz	
Approval/Conformity	CE, EAC, cULus, DC, Code 81U2	CE, EAC, cULus, DC, Code 81U2	
Productview	Page 526	Page 526	

	BOS00JJ BOS 18KF-PA-1FR-S4-C			
	18KF			
	Ø 18 x 87 mm			
	Fiber optic device			
	—			
	Sensitivity (Sn)			
	10...30 VDC			
	LED, red light			
	Connector, M12x1 connector, 4-pin			
	PBT			
	1000 Hz			
	CE, cULus			
	Page 526			

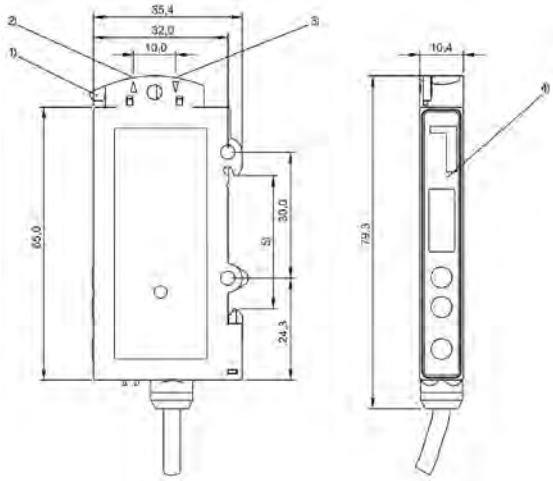

1) Fiber clamp, 2) Receiver, 3) Emitter, 4) Display and control panel, 5) For DIN rail 35mm

BFB0008

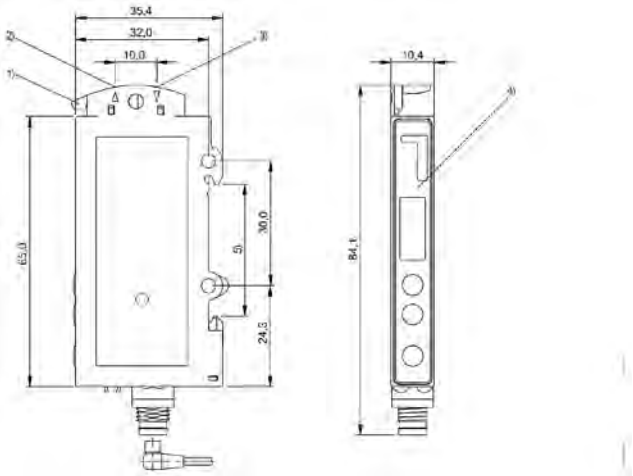

1) Fiber clamp, 2) Receiver, 3) Emitter, 4) Display and control panel, 5) For DIN rail 35mm

BFB0006

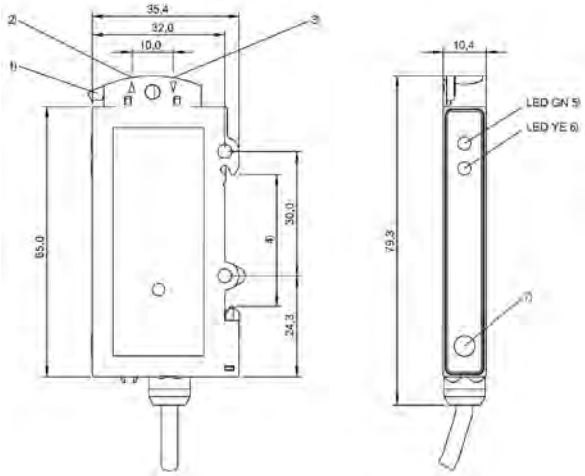

1) Fiber clamp, 2) Emitter, 3) Receiver, 4) For DIN rail 35mm, 5) stability, 6) Output function, 7) Sn

BFB0003

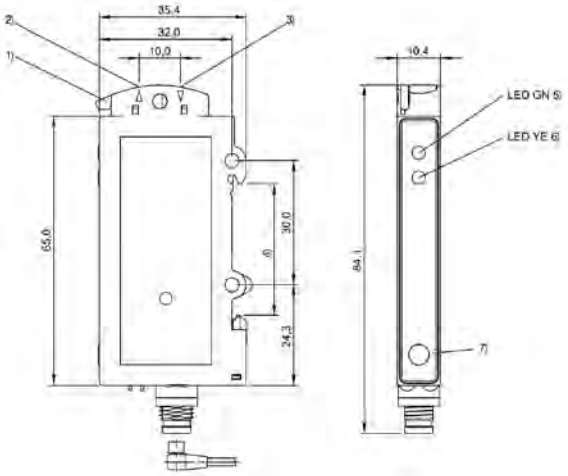

1) Fiber clamp, 2) Emitter, 3) Receiver, 4) For DIN rail 35mm, 5) stability, 6) Output function, 7) Sn

BFB0004

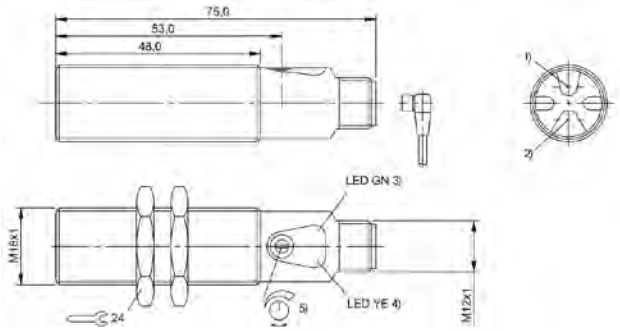

1) Optical axis receiver, 2) Optical axis emitter, 3) Operating voltage, 4) Light reception/limit area,

BFB000C, BFB000E, BFB0009, BFB000A

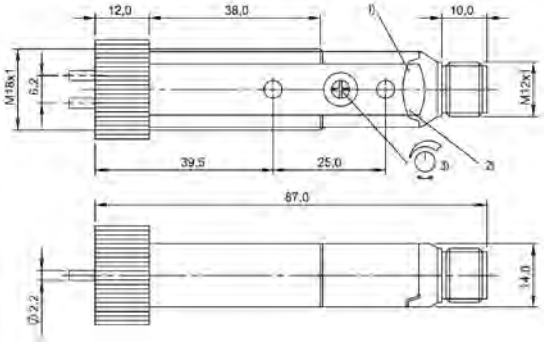

1) Output function, 2) Stability, 3) Sn

BOS00JJ

	BF0000F BFO 18A-LAA-MZG-20-0,5	BF0000H BFO 18A-LAA-MZG-20-1	BF0000J BFO 18A-LAA-MZG-20-1,5
Version	M5, standard	M5, standard	M5, standard
Photoelectric sensing principle	—	—	—
Use	for fiber optic base units BFB	for fiber optic base units BFB	for fiber optic base units BFB
Reference base unit	BFB M18M-011-P-S4	BFB M18M-011-P-S4	BFB M18M-011-P-S4
Fiber type material	Glass	Glass	Glass
Cable length L	0.5 m	1 m	1.5 m
Material jacket	Stainless steel	Stainless steel	Stainless steel
Range	200 mm	200 mm	200 mm
Ambient temperature	-20...250 °C	-20...250 °C	-20...250 °C
Material	—	—	—
Active surface, fibers	Bundle Ø 1.0 mm	Bundle Ø 1.0 mm	Bundle Ø 1.0 mm
Active surface, fiber arrangement	Homogeneous bundle	Homogeneous bundle	Homogeneous bundle
IP rating	IP50	IP50	IP50
Productview	Page 552	Page 552	Page 552

	BFO000M BFO 18A-LAA-UZG-20-0,5	BFO000N BFO 18A-LAA-UZG-20-1	BFO001Z BFO 18A-LGG-MZG-10-0,5	BFO0020 BFO 18A-LGG-MZG-10-1	BFO0023 BFO 18A-LGG-SMG-10-0,5
	M5, standard	M5, standard	Ø 2, standard	Ø 2, standard	Ø 2, standard
	—	—	—	—	—
	for fiber optic base units BFB	for fiber optic base units BFB	for fiber optic base units BFB	for fiber optic base units BFB	for fiber optic base units BFB
	BFB M18M-011-P-S4	BFB M18M-011-P-S4	BFB M18M-011-P-S4	BFB M18M-011-P-S4	BFB M18M-011-P-S4
	Glass	Glass	Glass	Glass	Glass
	0.5 m	1 m	0.5 m	1 m	0.5 m
	PUR	PUR	Stainless steel	Stainless steel	Silicone, on stainless steel
	200 mm	200 mm	100 mm	100 mm	100 mm
	-20...85 °C	-20...85 °C	-20...250 °C	-20...250 °C	-40...150 °C
	—	—	—	—	—
	Bundle Ø 1.0 mm	Bundle Ø 1.0 mm	Bundle Ø 1.4 mm	Bundle Ø 1.4 mm	Bundle Ø 1.4 mm
	Homogeneous bundle	Homogeneous bundle	Homogeneous bundle	Homogeneous bundle	Homogeneous bundle
	IP67	IP67	IP50	IP50	IP67
	Page 552	Page 552	Page 553	Page 553	Page 553

	BF00024 BFO 18A-LGG-SMG-10-1	BF0000U BFO 18A-LCC-SMG-20-0,5	BF0000W BFO 18A-LCC-SMG-20-1
Version	Ø 2, standard	Ø 6, standard	Ø 6, standard
Photoelectric sensing principle	—	—	—
Use	for fiber optic base units BFB	for fiber optic base units BFB	for fiber optic base units BFB
Reference base unit	BFB M18M-011-P-S4	BFB M18M-011-P-S4	BFB M18M-011-P-S4
Fiber type material	Glass	Glass	Glass
Cable length L	1 m	0.5 m	1 m
Material jacket	Silicone, on stainless steel	Silicone, on stainless steel	Silicone, on stainless steel
Range	100 mm	200 mm	200 mm
Ambient temperature	-40...150 °C	-40...150 °C	-40...150 °C
Material	—	—	—
Active surface, fibers	Bundle Ø 1.4 mm	Bundle Ø 1.0 mm	Bundle Ø 1.0 mm
Active surface, fiber arrangement	Homogeneous bundle	Homogeneous bundle	Homogeneous bundle
IP rating	IP67	IP67	IP67
Productview	Page 553	Page 554	Page 554

	BFO000Z BFO 18A-LCC-UZG-20-1	BFO003Y BFO 18V-LCC-MZG-23-0,5	BFO003Z BFO 18V-LCC-MZG-23-0,75	BFO0042 BFO 18V-LCC-SMG-23-0,5	BFO001P BFO 18A-LFF-MZG-10-0,5
	Ø 6, standard	Ø 6, standard	Ø 6, standard	Ø 6, standard	Ø 2, 90° optics
	–	–	–	–	–
	for fiber optic base units BFB	for fiber optic base units BFB	for fiber optic base units BFB	for fiber optic base units BFB	for fiber optic base units BFB
	BFB M18M-011-P-S4	BFB M18M-011-P-S4	BFB M18M-011-P-S4	BFB M18M-011-P-S4	BFB M18M-011-P-S4
	Glass	Glass	Glass	Glass	Glass
	1 m	0.5 m	0.75 m	0.5 m	0.5 m
	PUR	Stainless steel	Stainless steel	Silicone, on stainless steel	Stainless steel
	200 mm	200 mm	200 mm	200 mm	100 mm
	-20...85 °C	-20...250 °C	-20...250 °C	-40...150 °C	-20...250 °C
	–	–	–	–	–
	Bundle Ø 1.0 mm	Bundle Ø 2.1 mm	Bundle Ø 2.1 mm	Bundle Ø 2.1 mm	Bundle Ø 1.4 mm
	Homogeneous bundle	Homogeneous bundle	Homogeneous bundle	Homogeneous bundle	Homogeneous bundle
	IP67	IP50	IP50	IP67	IP50
	Page 554	Page 555	Page 555	Page 555	Page 556

	BF0001R BFO 18A-LFF-MZG-10-1	BF0001U BFO 18A-LFF-SMG-10-0,5	BF0001W BFO 18A-LFF-SMG-10-1
Version	Ø 2, 90° optics	Ø 2, 90° optics	Ø 2, 90° optics
Photoelectric sensing principle	—	—	—
Use	for fiber optic base units BFB	for fiber optic base units BFB	for fiber optic base units BFB
Reference base unit	BFB M18M-011-P-S4	BFB M18M-011-P-S4	BFB M18M-011-P-S4
Fiber type material	Glass	Glass	Glass
Cable length L	1 m	0.5 m	1 m
Material jacket	Stainless steel	Silicone, on stainless steel	Silicone, on stainless steel
Range	100 mm	100 mm	100 mm
Ambient temperature	-20...250 °C	-40...150 °C	-40...150 °C
Material	—	—	—
Active surface, fibers	Bundle Ø 1.4 mm	Bundle Ø 1.4 mm	Bundle Ø 1.4 mm
Active surface, fiber arrangement	Homogeneous bundle	Homogeneous bundle	Homogeneous bundle
IP rating	IP50	IP67	IP67
Productview	Page 556	Page 556	Page 556

BFO0013 BFO 18A-LEE-MZG-20-0,5	**BFO0014** BFO 18A-LEE-MZG-20-1	**BFO0019** BFO 18A-LEE-SMG-20-0,5	**BFO001A** BFO 18A-LEE-SMG-20-1	**BFO001F** BFO 18A-LEE-UZG-20-0,5
Ø 6, 90° optics	Ø 6, 90° optics	Ø 6, 90° optics	Ø 6, 90° optics	Ø 6, 90° optics
–	–	–	–	–
for fiber optic base units BFB	for fiber optic base units BFB	for fiber optic base units BFB	for fiber optic base units BFB	for fiber optic base units BFB
BFB M18M-011-P-S4	BFB M18M-011-P-S4	BFB M18M-011-P-S4	BFB M18M-011-P-S4	BFB M18M-011-P-S4
Glass	Glass	Glass	Glass	Glass
0.5 m	1 m	0.5 m	1 m	0.5 m
Stainless steel	Stainless steel	Silicone, on stainless steel	Silicone, on stainless steel	PUR
200 mm	200 mm	200 mm	200 mm	200 mm
-20...250 °C	-20...250 °C	-40...150 °C	-40...150 °C	-20...85 °C
–	–	–	–	–
Bundle Ø 1.0 mm	Bundle Ø 1.0 mm	Bundle Ø 1.0 mm	Bundle Ø 1.0 mm	Bundle Ø 1.0 mm
Homogeneous bundle	Homogeneous bundle	Homogeneous bundle	Homogeneous bundle	Homogeneous bundle
IP50	IP50	IP67	IP67	IP67
Page 557	Page 557	Page 557	Page 557	Page 558

	BF0001H BFO 18A-LEE-UZG-20-1	BF00047 BFO 18V-LDD-MZG-23-0,75	BF00049 BFO 18V-LDD-MZG-23-2,0
Version	Ø 6, 90° optics	Ø 6, 90° optics	Ø 6, 90° optics
Photoelectric sensing principle	—	—	—
Use	for fiber optic base units BFB	for fiber optic base units BFB	for fiber optic base units BFB
Reference base unit	BFB M18M-011-P-S4	BFB M18M-011-P-S4	BFB M18M-011-P-S4
Fiber type material	Glass	Glass	Glass
Cable length L	1 m	0.75 m	2 m
Material jacket	PUR	Stainless steel	Stainless steel
Range	200 mm	200 mm	200 mm
Ambient temperature	-20...85 °C	-20...250 °C	-20...250 °C
Material	—	—	—
Active surface, fibers	Bundle Ø 1.0 mm	Bundle Ø 2.1 mm	Bundle Ø 2.1 mm
Active surface, fiber arrangement	Homogeneous bundle	Homogeneous bundle	Homogeneous bundle
IP rating	IP67	IP50	IP50
Productview	Page 558	Page 558	Page 558

	BFO004A BFO 18V-LDD-MZG-23-3	BFO004C BFO 18V-LDD-SMG-23-0,5	BFO004F BFO 18V-LDD-SMG-23-1	BFO0026 BFO 18A-XAA-MZG-30-0,5	BFO0027 BFO 18A-XAA-MZG-30-1
	Ø 6, 90° optics	Ø 6, 90° optics	Ø 6, 90° optics	M5, standard	M5, standard
	–	–	–	–	–
	for fiber optic base units BFB	for fiber optic base units BFB	for fiber optic base units BFB	for fiber optic base units BFB	for fiber optic base units BFB
	BFB M18M-011-P-S4	BFB M18M-011-P-S4	BFB M18M-011-P-S4	BFB M18M-011-P-S4	BFB M18M-011-P-S4
	Glass	Glass	Glass	Glass	Glass
	3 m	0.5 m	1 m	0.5 m	1 m
	Stainless steel	Silicone, on stainless steel	Silicone, on stainless steel	Stainless steel	Stainless steel
	200 mm	200 mm	200 mm	20 mm	20 mm
	-20...250 °C	-40...150 °C	-40...150 °C	-20...250 °C	-20...250 °C
	–	–	–	–	–
	Bundle Ø 2.1 mm	Bundle Ø 2.1 mm	Bundle Ø 2.1 mm	Bundle Ø 3.0 mm	Bundle Ø 3.0 mm
	Homogeneous bundle	Homogeneous bundle	Homogeneous bundle	Segmented bundle	Segmented bundle
	IP50	IP67	IP67	IP50	IP50
	Page 558	Page 559	Page 559	Page 559	Page 559

	BF000H3 BFO 18A-XAA-MZG-30-5	BF0002F BFO 18A-XAA-SMG-30-0,5	BF0002H BFO 18A-XAA-SMG-30-1	
Version	M5, standard	M5, standard	M5, standard	
Photoelectric sensing principle	—	—	—	
Use	for fiber optic base units BFB	for fiber optic base units BFB	for fiber optic base units BFB	
Reference base unit	BFB M18M-011-P-S4	BFB M18M-011-P-S4	BFB M18M-011-P-S4	
Fiber type material	Glass	Glass	Glass	
Cable length L	5 m	0.5 m	1 m	
Material jacket	Stainless steel	Silicone, on stainless steel	Silicone, on stainless steel	
Range	20 mm	20 mm	20 mm	
Ambient temperature	-20...250 °C	-40...150 °C	-40...150 °C	
Material	—	—	—	
Active surface, fibers	Bundle Ø 3.0 mm	Bundle Ø 3.0 mm	Bundle Ø 3.0 mm	
Active surface, fiber arrangement	Segmented bundle	Segmented bundle	Segmented bundle	
IP rating	IP50	IP67	IP67	
Productview	Page 559	Page 560	Page 560	

	BFO002M BFO 18A-XAA-UZG-30-0,5	BFO002N BFO 18A-XAA-UZG-30-1	BFO00H8 BFO NU1-XB-05K-MZG-11-01	BFO003R BFO 18A-XAG-MZG-15-0,5	BFO003T BFO 18A-XAG-MZG-15-1
	M5, standard	M5, standard	M4, standard	Ø 2, standard	Ø 2, standard
	—	—	—	—	—
	for fiber optic base units BFB	for fiber optic base units BFB	for photoelectric color sensors BFS	for fiber optic base units BFB	for fiber optic base units BFB
	BFB M18M-011-P-S4	BFB M18M-011-P-S4	BFS 33M-GSS-..	BFB M18M-011-P-S4	BFB M18M-011-P-S4
	Glass	Glass	Glass	Glass	Glass
	0.5 m	1 m	1 m	0.5 m	1 m
	PUR	PUR	PE	Stainless steel	Stainless steel
	20 mm	20 mm	60 mm	10 mm	10 mm
	-20...85 °C	-20...85 °C	-20...170 °C	-20...250 °C	-20...250 °C
	—	—	Stainless steel (1.4305)	—	—
	Bundle Ø 3.0 mm	Bundle Ø 3.0 mm	Ø 1.0 mm	Bundle Ø 1.7 mm	Bundle Ø 1.7 mm
	Segmented bundle	Segmented bundle	Ring around individual fiber	Segmented bundle	Segmented bundle
	IP67	IP67	IP50	IP50	IP50
	Page 560	Page 560	Page 561	Page 561	Page 561

	BF0002U BFO 18A-XAC-SMG-30-0,5	BF0002W BFO 18A-XAC-SMG-30-1	BF0004M BFO 18V-XAC-MZG-30-0,5
Version	Ø 6, standard	Ø 6, standard	Ø 6, standard
Photoelectric sensing principle	—	—	—
Use	for fiber optic base units BFB	for fiber optic base units BFB	for fiber optic base units BFB
Reference base unit	BFB M18M-011-P-S4	BFB M18M-011-P-S4	BFB M18M-011-P-S4
Fiber type material	Glass	Glass	Glass
Cable length L	0.5 m	1 m	0.5 m
Material jacket	Silicone, on stainless steel	Silicone, on stainless steel	Stainless steel
Range	20 mm	20 mm	20 mm
Ambient temperature	-40...150 °C	-40...150 °C	-20...250 °C
Material	—	—	—
Active surface, fibers	Bundle Ø 3.0 mm	Bundle Ø 3.0 mm	Bundle Ø 3.0 mm
Active surface, fiber arrangement	Segmented bundle	Segmented bundle	Segmented bundle
IP rating	IP67	IP67	IP50
Productview	Page 562	Page 562	Page 562

	BFO004P BFO 18V-XAC-SMG-30-0,5	BFO004R BFO 18V-XAC-SMG-30-1	BFO003H BFO 18A-XAF-MZG-15-0,5	BFO003J BFO 18A-XAF-MZG-15-1	BFO003M BFO 18A-XAF-SMG-15-0,5
	Ø 6, standard	Ø 6, standard	Ø 2, 90° optics	Ø 2, 90° optics	Ø 2, 90° optics
	–	–	–	–	–
	for fiber optic base units BFB	for fiber optic base units BFB	for fiber optic base units BFB	for fiber optic base units BFB	for fiber optic base units BFB
	BFB M18M-011-P-S4	BFB M18M-011-P-S4	BFB M18M-011-P-S4	BFB M18M-011-P-S4	BFB M18M-011-P-S4
	Glass	Glass	Glass	Glass	Glass
	0.5 m	1 m	0.5 m	1 m	0.5 m
	Silicone, on stainless steel	Silicone, on stainless steel	Stainless steel	Stainless steel	Silicone, on stainless steel
	20 mm	20 mm	10 mm	10 mm	10 mm
	-40...150 °C	-40...150 °C	-20...250 °C	-20...250 °C	-40...150 °C
	–	–	–	–	–
	Bundle Ø 3.0 mm	Bundle Ø 3.0 mm	Bundle Ø 1.4 mm	Bundle Ø 1.4 mm	Bundle Ø 1.4 mm
	Segmented bundle	Segmented bundle	Segmented bundle	Segmented bundle	Segmented bundle
	IP67	IP67	IP50	IP50	IP67
	Page 563	Page 563	Page 563	Page 563	Page 564

	BF0003N BFO 18A-XAF-SMG-15-1	BF00031 BFO 18A-XAE-MZG-30-0,5	BF00032 BFO 18A-XAE-MZG-30-1
Version	Ø 2, 90° optics	Ø 6, 90° optics	Ø 6, 90° optics
Photoelectric sensing principle	—	—	—
Use	for fiber optic base units BFB	for fiber optic base units BFB	for fiber optic base units BFB
Reference base unit	BFB M18M-011-P-S4	BFB M18M-011-P-S4	BFB M18M-011-P-S4
Fiber type material	Glass	Glass	Glass
Cable length L	1 m	0.5 m	1 m
Material jacket	Silicone, on stainless steel	Stainless steel	Stainless steel
Range	10 mm	20 mm	20 mm
Ambient temperature	-40...150 °C	-20...250 °C	-20...250 °C
Material	—	—	—
Active surface, fibers	Bundle Ø 1.4 mm	Bundle Ø 3.0 mm	Bundle Ø 3.0 mm
Active surface, fiber arrangement	Segmented bundle	Segmented bundle	Segmented bundle
IP rating	IP67	IP50	IP50
Productview	Page 564	Page 564	Page 564

	BFO0037 BFO 18A-XAE-SMG-30-0,5	BFO0038 BFO 18A-XAE-SMG-30-1	BFO003C BFO 18A-XAE-UZG-30-0,5	BFO003E BFO 18A-XAE-UZG-30-1	BFO004U BFO 18V-XAD-MZG-30-0,5
	Ø 6, 90° optics	Ø 6, 90° optics	Ø 6, 90° optics	Ø 6, 90° optics	Ø 6, 90° optics
	–	–	–	–	–
	for fiber optic base units BFB	for fiber optic base units BFB	for fiber optic base units BFB	for fiber optic base units BFB	for fiber optic base units BFB
	BFB M18M-011-P-S4	BFB M18M-011-P-S4	BFB M18M-011-P-S4	BFB M18M-011-P-S4	BFB M18M-011-P-S4
	Glass	Glass	Glass	Glass	Glass
	0.5 m	1 m	0.5 m	1 m	0.5 m
	Silicone, on stainless steel	Silicone, on stainless steel	PUR	PUR	Stainless steel
	20 mm	20 mm	20 mm	20 mm	20 mm
	-40...150 °C	-40...150 °C	-20...85 °C	-20...85 °C	-20...70 °C
	–	–	–	–	–
	Bundle Ø 3.0 mm	Bundle Ø 3.0 mm	Bundle Ø 3.0 mm	Bundle Ø 3.0 mm	Bundle Ø 3.0 mm
	Segmented bundle	Segmented bundle	Segmented bundle	Segmented bundle	Segmented bundle
	IP67	IP67	IP67	IP67	IP50
	Page 565	Page 565	Page 565	Page 565	Page 566

	BF0004Y BFO 18V-XAD-SMG-30-0,5	BF0004Z BFO 18V-XAD-SMG-30-1	BF0005Y BFO D22-LD-EAK-10-20
Version	Ø 6, 90° optics	Ø 6, 90° optics	4.4x2.2 Duplex cable
Photoelectric sensing principle	—	—	—
Use	for fiber optic base units BFB	for fiber optic base units BFB	for fiber optic base units BFB
Reference base unit	BFB M18M-011-P-S4	BFB M18M-011-P-S4	BFB 75K-001-..
Fiber type material	Glass	Glass	PMMA
Cable length L	0.5 m	1 m	20 m
Material jacket	Silicone, on stainless steel	Silicone, on stainless steel	PE
Range	20 mm	20 mm	120 mm for L = 2 m
Ambient temperature	-40...150 °C	-40...150 °C	-40...85 °C
Material	—	—	—
Active surface, fibers	Bundle Ø 3.0 mm	Bundle Ø 3.0 mm	Ø 1.0 mm (2x)
Active surface, fiber arrangement	Segmented bundle	Segmented bundle	Adjacent to one another
IP rating	IP67	IP67	IP65
Productview	Page 566	Page 566	Page 567

	BFO0000C BFO N22-LA-FB-EAK-05-01	BFO0005R BFO D22-LA-RB-EAK-10-02	BFO0005M BFO D22-LA-KB-EAK-10-02	BFO0005U BFO D22-LAP-KB-EAK-15-02	BFO0005T BFO D22-LAH-KB-EAK-10-02
	M2, standard	M3, standard	M4, standard	M4, standard	M4, standard, flexible cable
	—	—	—	—	—
	for fiber optic base units BFB	for fiber optic base units BFB	for fiber optic base units BFB	for fiber optic base units BFB	for fiber optic base units BFB
	BFB 75K-001-..	BFB 75K-001-..	BFB 75K-001-..	BFB 75K-001-..	BFB 75K-001-..
	PMMA	PMMA	PMMA	PMMA	PMMA
	1 m	2 m	2 m	2 m	2 m
	PE	PE	PE	PE	PE
	140 mm	500 mm	500 mm	800 mm	400 mm
	-40...60 °C	-55...70 °C	-40...70 °C	-55...70 °C	-40...70 °C
	—	—	—	—	—
	Ø 0.5 mm	Ø 1.0 mm	Ø 1.0 mm	Ø 1.5 mm	Ø 1.0 mm
	Single fiber	Single fiber	Single fiber	Single fiber	Single fiber
	IP65	IP65	IP65	IP65	IP65
	Page 567	Page 568	Page 568	Page 569	Page 569

	BFO005W BFO D22-LAT-KB-EAK-10-02	BFO005N BFO D22-LA-NB-EAK-10-02	BFO0051 BFO D10-LA-CB-EAK-05-02	
Version	M4, standard, high temp.	M4, bendable tip	Ø 2, standard	
Photoelectric sensing principle	—	—	—	
Use	for fiber optic base units BFB	for fiber optic base units BFB	for fiber optic base units BFB	
Reference base unit	BFB 75K-001-..	BFB 75K-001-..	BFB 75K-001-..	
Fiber type material	PC	PMMA	PMMA	
Cable length L	2 m	2 m	2 m	
Material jacket	PE, cross-linked	PE	PE	
Range	600 mm	500 mm	130 mm	
Ambient temperature	-55...115 °C	-55...70 °C	-55...70 °C	
Material	—	—	—	
Active surface, fibers	Ø 1.0 mm	Ø 1.0 mm	Ø 0.5 mm	
Active surface, fiber arrangement	Single fiber	Single fiber	Single fiber	
IP rating	IP65	IP65	IP65	
Productview	Page 570	Page 570	Page 571	

	BF000AY BFO D22-LAT-YB-EAK-10-0,5	BF0005P BFO D22-LA-QB-PAK-05-02	BF000H6 BFO D22-LAH-JD-EAK-10-02	BF00056 BFO D13-LA-QB-EAK-05-02	BF000AW BFO D22-LAH-BK-EAK-10-02
	Ø 3, 90° optics, high temperature	Ø 3, thin point, 90° optics	Ø 3, thin point, 90° optics	Ø 3, thin point, 90° optics	M4, 90° conn., flex. cable
	—	—	—	—	—
	for fiber optic base units BFB	for fiber optic base units BFB	for fiber optic base units BFB	for fiber optic base units BFB	for fiber optic base units BFB
	BFB 75K-001-..	BFB 75K-001-..	BFB 75K-001-..	BFB 75K-001-..	BFB 75K-001-..
	PC	PMMA	PMMA	PMMA	PMMA
	0.5 m	2 m	2 m	2 m	2 m
	PE, cross-linked	PVC	PE	PE	PE
	600 mm	120 mm	300 mm	110 mm	250 mm
	-55...115 °C	-40...70 °C	-40...70 °C	-30...70 °C	-40...70 °C
	—	—	Brass nickel plated	—	—
	Ø 1.0 mm	Ø 1.0 mm	Ø 1.0 mm	Ø 0.5 mm	Ø 1.0 mm
	Single fiber	Single fiber	Single fiber	Single fiber	Single fiber
	IP65	IP65	IP65	IP65	IP65
	Page 571	Page 572	Page 572	Page 573	Page 573

	BFO00C8 BFO D25 LA-HD-EAK-465-02	**BFO00C6** BFO D10-LAH-CK-EAK-05-02	**BFO00C7** BFO D10-LAH-DK-EAK-05-02	
Version	0.25x46.5, 90°-light grid	0.5 mm, 90°	0.5 mm, 90°	
Photoelectric sensing principle	—	—	—	
Use	for fiber optic base units BFB	for fiber optic base units BFB	for fiber optic base units BFB	
Reference base unit	BFB 75K-001-..	BFB 75K-001-..	BFB 75K-001-..	
Fiber type material	PMMA	PMMA	PMMA	
Cable length L	2 m	2 m	2 m	
Material jacket	PE	PE	PE	
Range	550 mm	55 mm	50 mm	
Ambient temperature	-55...70 °C	-40...70 °C	-40...70 °C	
Material	—	—	—	
Active surface, fibers	Ø 0.25 mm (32x)	Ø 0.5 mm	Ø 0.5 mm	
Active surface, fiber arrangement	Row	Single fiber	Single fiber	
IP rating	IP65	IP65	IP65	
Productview	Page 574	Page 574	Page 575	

	BF000AP BFO D22-LA-GD-EAK-52-02	BF00067 BFO D25-LA-CD-EAK-110-02	BF000C5 BFO D25-LA-ED-EAK-250-0,5	BF00068 BFO D25-LA-ED-EAK-250-02	BF0005K BFO D22-LA-BD-EAK-52-02
	5x10, light grid	6x19, light grid	0.25x24.8, 90°-light grid	5.5x38, 90°-light grid	5x15, 90° light grid
	—	—	—	—	—
	for fiber optic base units BFB	for fiber optic base units BFB	for fiber optic base units BFB	for fiber optic base units BFB	for fiber optic base units BFB
	BFB 75K-001-..	BFB 75K-001-..	BFB 75K-001-..	BFB 75K-001-..	BFB 75K-001-..
	PMMA	PMMA	PMMA	PMMA	PMMA
	2 m	2 m	0.5 m	2 m	2 m
	PE	PE	PE	PE	PE
	500 mm	600 mm	550 mm	550 mm	400 mm
	-55...70 °C	-55...70 °C	-55...70 °C	-55...70 °C	-55...70 °C
	—	—	—	—	—
	Ø 0.25 mm (16x)	Ø 0.25 mm (32x)	Ø 0.25 mm (32x)	Ø 0.25 mm (32x)	Ø 0.25 mm (16x)
	Row	Row	Row	Row	Row
	IP65	IP65	IP65	IP65	IP65
	Page 575	Page 576	Page 576	Page 577	Page 577

	BF00059 BFO D13-LG-10-EAK-30-02	BF00058 BFO D13-LG-05-EAK-30-02	BF0005E BFO D13-XB-RB-EAK-10-02
Version	Fork, coaxial optics	Fork, coaxial optics	M3, coaxial optics
Photoelectric sensing principle	—	—	—
Use	for fiber optic base units BFB	for fiber optic base units BFB	for fiber optic base units BFB
Reference base unit	BFB 75K-001-..	BFB 75K-001-..	BFB 75K-001-..
Fiber type material	PMMA	PMMA	PMMA
Cable length L	2 m	2 m	2 m
Material jacket	PE	PE	PE
Range	10 mm	5 mm	60 mm
Ambient temperature	-55...70 °C	-55...70 °C	-55...70 °C
Material	—	—	—
Active surface, fibers	Ø 0.25 mm (2x)	Ø 0.25 mm (2x)	Ø 0.5 mm, Ø 0.25 mm (10x)
Active surface, fiber arrangement	opposing	opposing	Ring around individual fiber
IP rating	IP65	IP65	IP65
Productview	Page 578	Page 578	Page 579

	BF00054 BFO D10-XA-RB-EAK-10-02	BF000C3 BFO D10-XA-VB-EAK-10-02	BF00052 BFO D10-XA-GB-EAK-10-02	BF0005C BFO D13-XB-KB-EAK-10-02	BF00006 BFO D22-XB-UB-EAK-15-02
	M3, standard	M3, standard	M3, bendable tip	M4, coaxial optics	M4, coaxial optics
	—	—	—	—	—
	for fiber optic base units BFB	for fiber optic base units BFB	for fiber optic base units BFB	for fiber optic base units BFB	for fiber optic base units BFB
	BFB 75K-001-..	BFB 75K-001-..	BFB 75K-001-..	BFB 75K-001-..	BFB 75K-001-..
	PMMA	PMMA	PMMA	PMMA	PMMA
	2 m	2 m	2 m	2 m	2 m
	PE	PE	PE	PE	PE
	50 mm	50 mm	50 mm	60 mm	130 mm
	-55...70 °C	-55...70 °C	-55...70 °C	-55...70 °C	-40...60 °C
	—	—	—	—	—
	Ø 0.5 mm (2x)	Ø 0.5 mm (2x)	Ø 0.5 mm (2x)	Ø 0.5 mm, Ø 0.25 mm (10x)	Ø 0.25 mm (16x), Ø 1.0 mm
	Adjacent to one another	Adjacent to one another	Adjacent to one another	Ring around individual fiber	Ring around individual fiber
	IP65	IP65	IP65	IP65	IP65
	Page 579	Page 580	Page 580	Page 581	Page 581

	BF000C9 BFO D22-XB-UB-EAK-15-SA1-02	BF00055 BFO D10-XAH-KB-EAK-10-02	BF00005 BFO D22-XA-UB-EAK-20-02	
Version	M4, coaxial optics	M4, standard	M4, standard	
Photoelectric sensing principle	—	—	—	
Use	for fiber optic base units BFB	for fiber optic base units BFB	for fiber optic base units BFB	
Reference base unit	BFS 33M-GSS-..	BFB 75K-001-..	BFB 75K-001-..	
Fiber type material	PMMA	PMMA	PMMA	
Cable length L	2 m	2 m	2 m	
Material jacket	PE	PE	PE	
Range	130 mm	50 mm	150 mm	
Ambient temperature	-40...60 °C	-40...70 °C	-55...70 °C	
Material	—	—	—	
Active surface, fibers	Ø 0.25 mm (16x), Ø 1.0 mm	Ø 0.5 mm (2x)	Ø 1.0 mm (2x)	
Active surface, fiber arrangement	Ring around individual fiber	Adjacent to one another	Adjacent to one another	
IP rating	IP65	IP65	IP65	
Productview	Page 582	Page 582	Page 583	

	BF00053 BFO D10-XA-HB-EAK-10-02	BF00066 BFO D22-XB-LB-EAK-15-02	BF000H4 BFO D22-XB-LB-EAK-15-SA1-0,5	BF000FP BFO D22-XB-LB-EAK-15-SA1-01	BF000C4 BFO D22-XB-LB-EAK-15-SA1-02
	M4, bendable tip	M6, coaxial optics	M6, coaxial optics	M6, coaxial optics	M6, coaxial optics
	—	—	—	—	—
	for fiber optic base units BFB	for fiber optic base units BFB	for fiber optic base units BFB	for fiber optic base units BFB	for fiber optic base units BFB
	BFB 75K-001-..	BFB 75K-001-..	BFS 33M-GSS-..	BFS 33M-GSS-..	BFS 33M-GSS-..
	PMMA	PMMA	PMMA	PMMA	PMMA
	2 m	2 m	0.5 m	1 m	2 m
	PE	PE	PE	PE	PE
	50 mm	120 mm	80 mm	80 mm	80 mm
	-55...70 °C	-55...70 °C	-55...70 °C	-55...70 °C	-55...70 °C
	—	—	Stainless steel (1.4305)	—	—
	Ø 0.5 mm (2x)	Ø 1.0 mm, Ø 0.25 mm (16x)	Ø 1.0 mm, Ø 0.25 mm (16x)	Ø 0.25 mm (16x), Ø 1.0 mm	Ø 1.0 mm, Ø 0.25 mm (16x)
	Adjacent to one another	Ring around individual fiber	Ring around individual fiber	Ring around individual fiber	Ring around individual fiber
	IP65	IP65	IP65	IP65	IP65
	Page 583	Page 584	Page 584	Page 584	Page 584

	BF000FN BFO D22-XB-LB-EAK-15-SA1-05	BF00007 BFO D22-XBF-LB-EAK-15-02	BF000H5 BFO D22-XA-08B-EAK-26-02
Version	M6, coaxial optics	M6, coax. optics, flex. cable	M6, standard
Photoelectric sensing principle	—	—	—
Use	for fiber optic base units BFB	for fiber optic base units BFB	for fiber optic base units BFB
Reference base unit	BFS 33M-GSS-..	BFB 75K-001-..	BFB 75K-001-..
Fiber type material	PMMA	PMMA	PMMA
Cable length L	5 m	2 m	2 m
Material jacket	PE	PE	PE
Range	80 mm	110 mm	180 mm
Ambient temperature	-55...70 °C	-40...60 °C	-55...70 °C
Material	—	—	Brass nickel plated
Active surface, fibers	Ø 0.25 mm (16x), Ø 1.0 mm	Ø 1.0 mm, Ø 0.25 mm (16x)	Ø 1.0 mm (2x)
Active surface, fiber arrangement	Ring around individual fiber	Ring around individual fiber	Adjacent to one another
IP rating	IP65	IP65	IP65
Productview	Page 584	Page 585	Page 585

	BFO0064 BFO D22-XAP-LB-EAK-30-02	BFO0003 BFO D22-XA-DB-EAK-20-01	BFO0063 BFO D22-XAH-LB-EAK-20-02	BFO0065 BFO D22-XAT-LB-EAK-20-02	BFO0004 BFO D22-XA-SB-EAK-20-02
	M6, standard	M6, standard	M6, standard, flexible cable	M6, standard, high temp.	M6, thin tip, standard
	—	—	—	—	—
	for fiber optic base units BFB	for fiber optic base units BFB	for fiber optic base units BFB	for fiber optic base units BFB	for fiber optic base units BFB
	BFB 75K-001-..	BFB 75K-001-..	BFB 75K-001-..	BFB 75K-001-..	BFB 75K-001-..
	PMMA	PMMA	PMMA	PC	PMMA
	2 m	1 m	2 m	2 m	2 m
	PE	PE	PE	PE, cross-linked	PE
	180 mm	140 mm	120 mm	130 mm	150 mm
	-55...70 °C	-40...60 °C	-40...70 °C	-55...115 °C	-55...70 °C
	—	—	—	—	—
	Ø 1.5 mm (2x)	Ø 1.0 mm (2x)	Ø 1.0 mm (2x)	Ø 1.0 mm (2x)	Ø 1.0 mm (2x)
	Adjacent to one another	Adjacent to one another	Adjacent to one another	Adjacent to one another	Adjacent to one another
	IP65	IP65	IP65	IP65	IP65
	Page 586	Page 586	Page 587	Page 587	Page 588

	BF000AT BFO D13-XB-AB-EAK-10-01	BF0005A BFO D13-XA-JB-EAK-20-02	BF00062 BFO D22-XA-MB-PAK-10-02	
Version	Ø 2.5, coax optics	Ø 3, Standard	Ø 3, thin point, 90° optics	
Photoelectric sensing principle	—	—	—	
Use	for fiber optic base units BFB	for fiber optic base units BFB	for fiber optic base units BFB	
Reference base unit	BFB 75K-001-..	BFB 75K-001-..	BFB 75K-001-..	
Fiber type material	PMMA	PMMA	PMMA	
Cable length L	1 m	2 m	2 m	
Material jacket	PE	PE	PVC	
Range	60 mm	130 mm	35 mm	
Ambient temperature	-55...70 °C	-55...70 °C	-40...70 °C	
Material	—	—	—	
Active surface, fibers	Ø 0.5 mm, Ø 0.25 mm (9x)	Ø 0.5 mm (2x)	Ø 0.5 mm (2x)	
Active surface, fiber arrangement	Ring around individual fiber	Adjacent to one another	Adjacent to one another	
IP rating	IP65	IP65	IP65	
Productview	Page 588	Page 589	Page 589	

	BF0005Z BF0 D22-XA-CD-EAK-110-02	BF000AR BF0 D13-XV-AK-EAK-50-02	BF00060 BF0 D22-XA-ED-EAK-250-02		
	6x19, light grid	13x19.7, 90° optics	5.5x38, 90°-light grid		
	—	—	—		
	for fiber optic base units BFB	for fiber optic base units BFB	for fiber optic base units BFB		
	BFB 75K-001-..	BFB 75K-001-..	BFB 75K-001-..		
	PMMA	PMMA	PMMA		
	2 m	2 m	2 m		
	PE	PE	PE		
	100 mm	6 mm	90 mm		
	-55...70 °C	-55...70 °C	-55...70 °C		
	—	—	—		
	Ø 0.25 mm (32x)	Ø 0.5 mm (2x)	Ø 0.25 mm (32x)		
	Row	Distance	Row		
	IP65	IP65	IP65		
	Page 590	Page 590	Page 591		

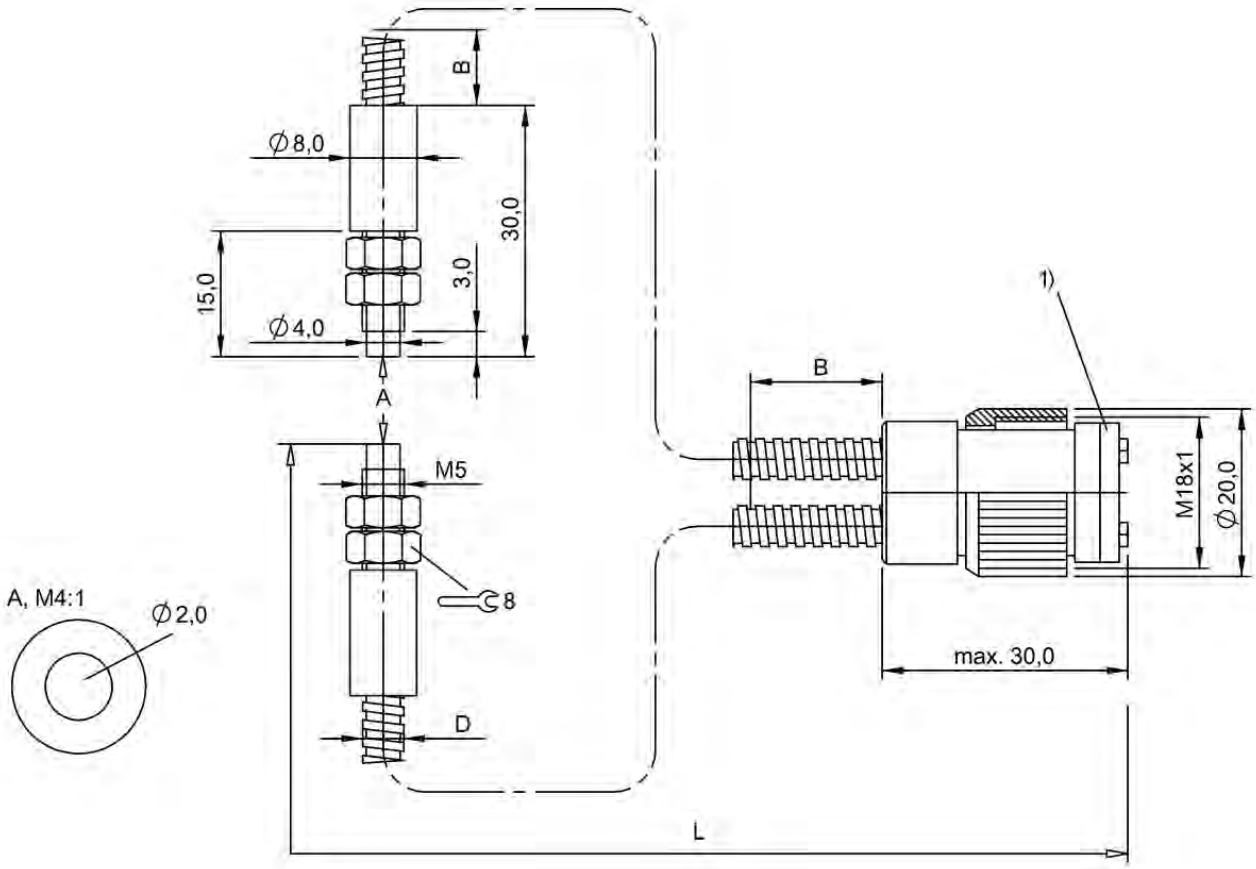

1) Disc removable

BFO000F, BFO000H, BFO000J

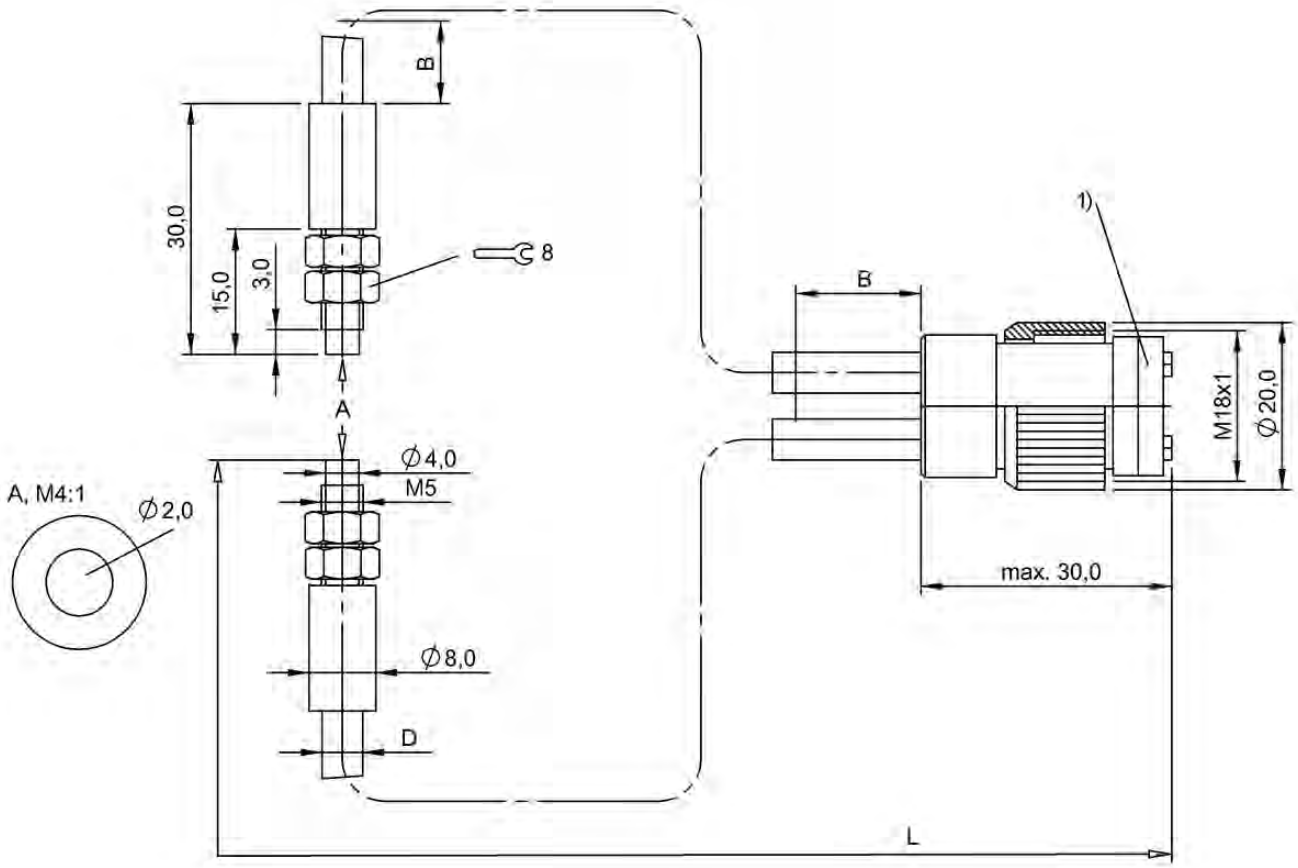

1) Disc removable

BFO000M, BFO000N

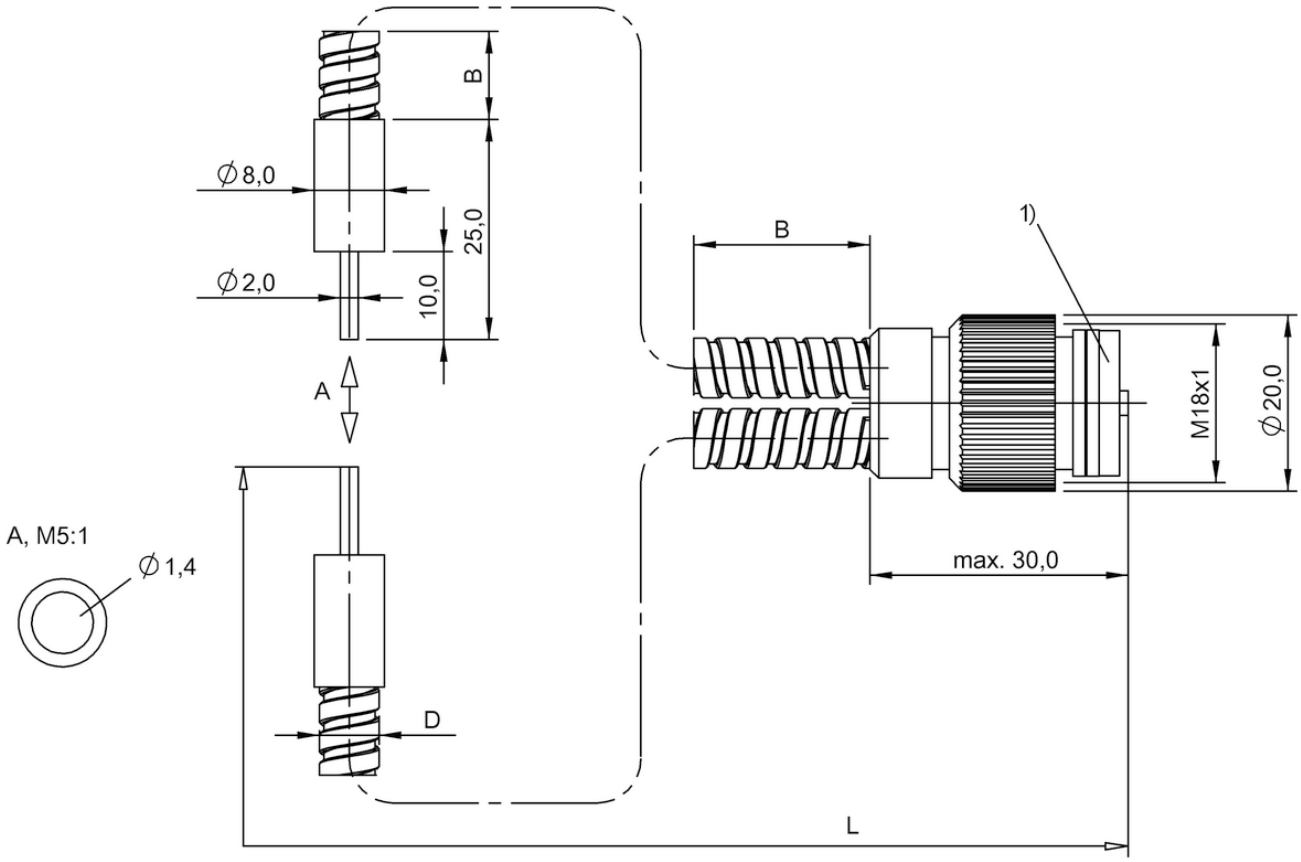

1) Disc removable

BFO001Z, BFO0020

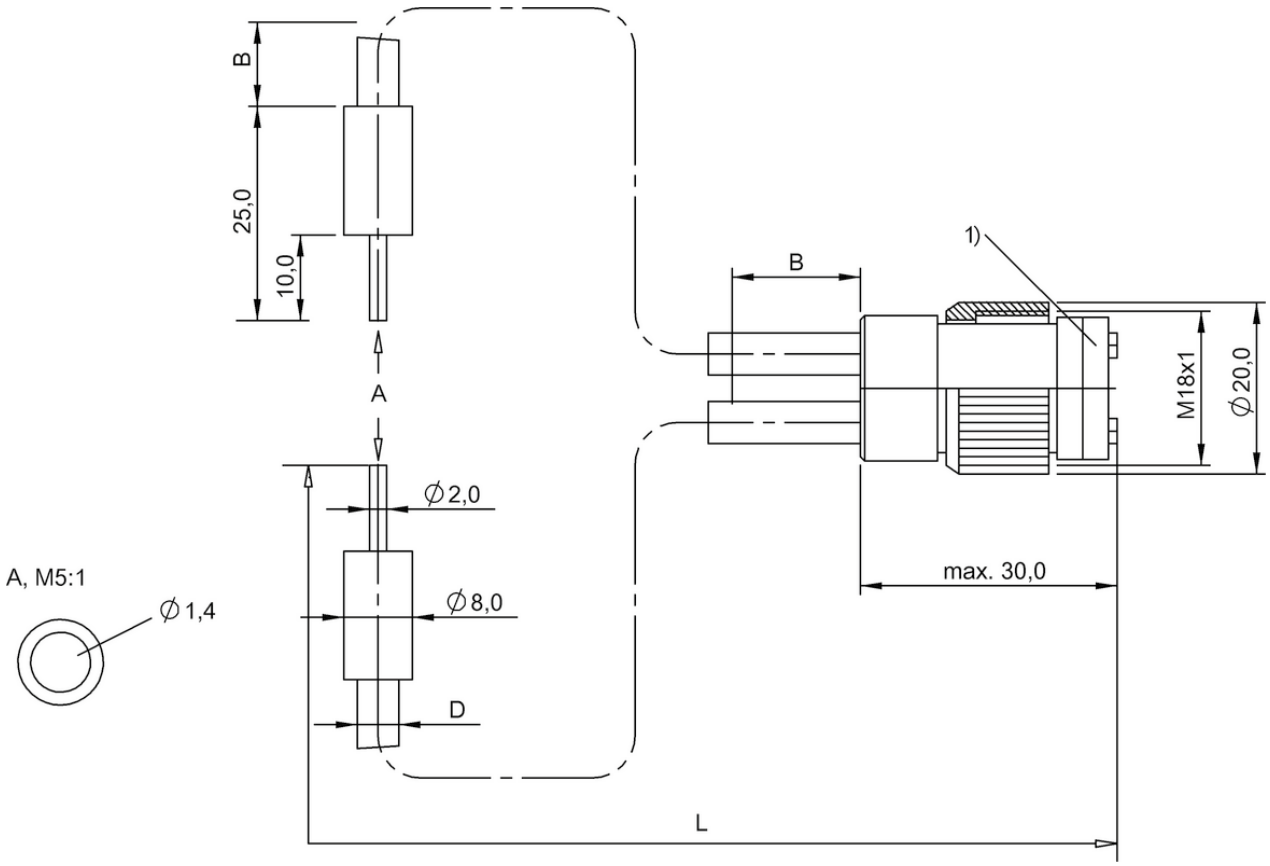

1) Disc removable

BFO0023, BFO0024

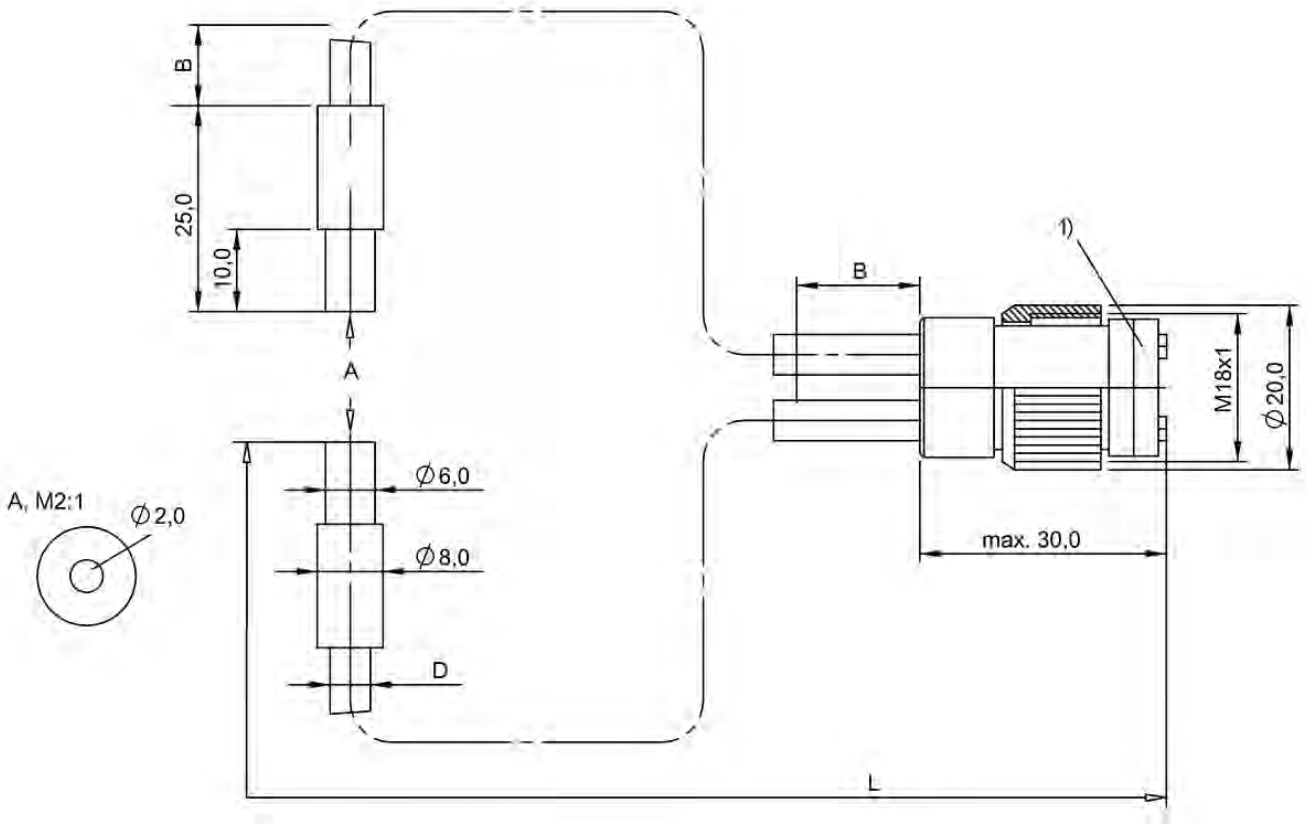

1) Disc removable

BFO000U, BFO000W

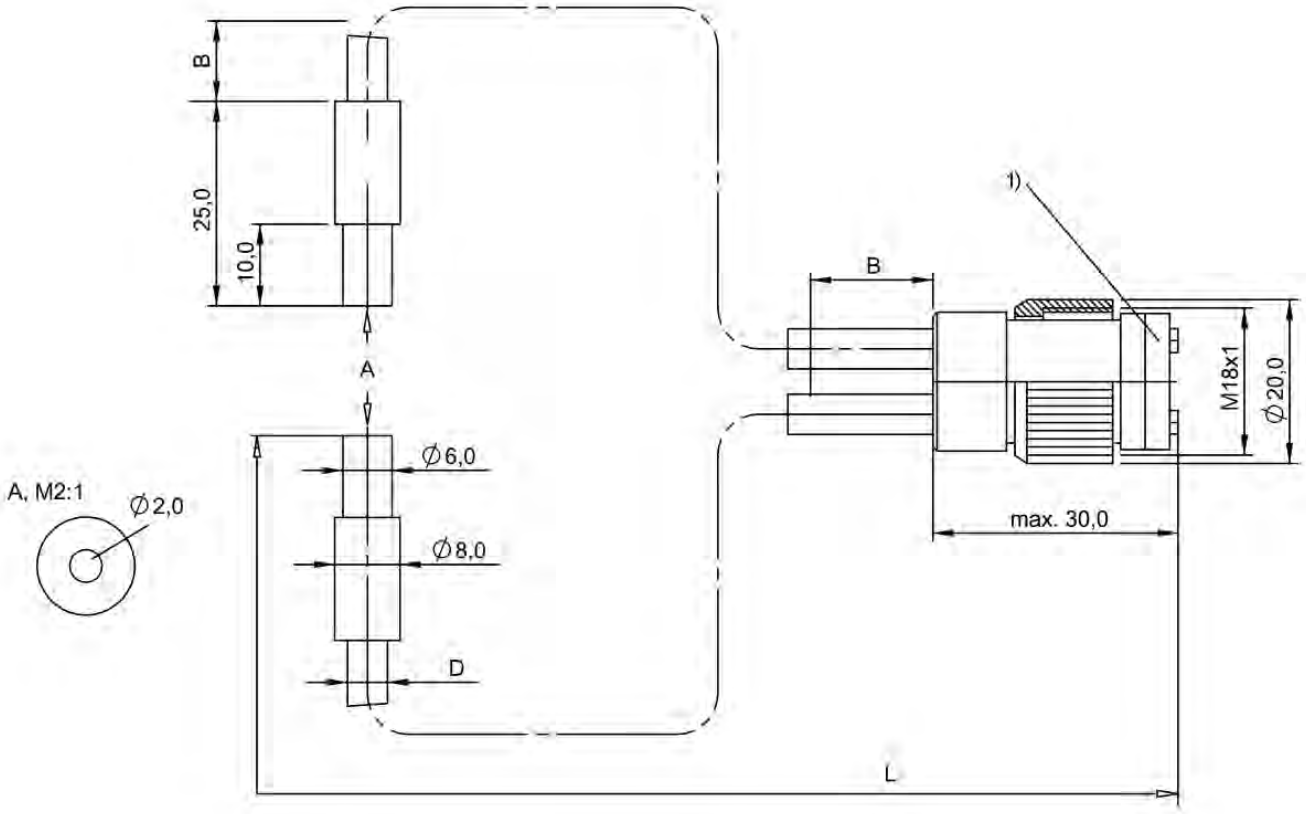

1) Disc removable

BFO000Z

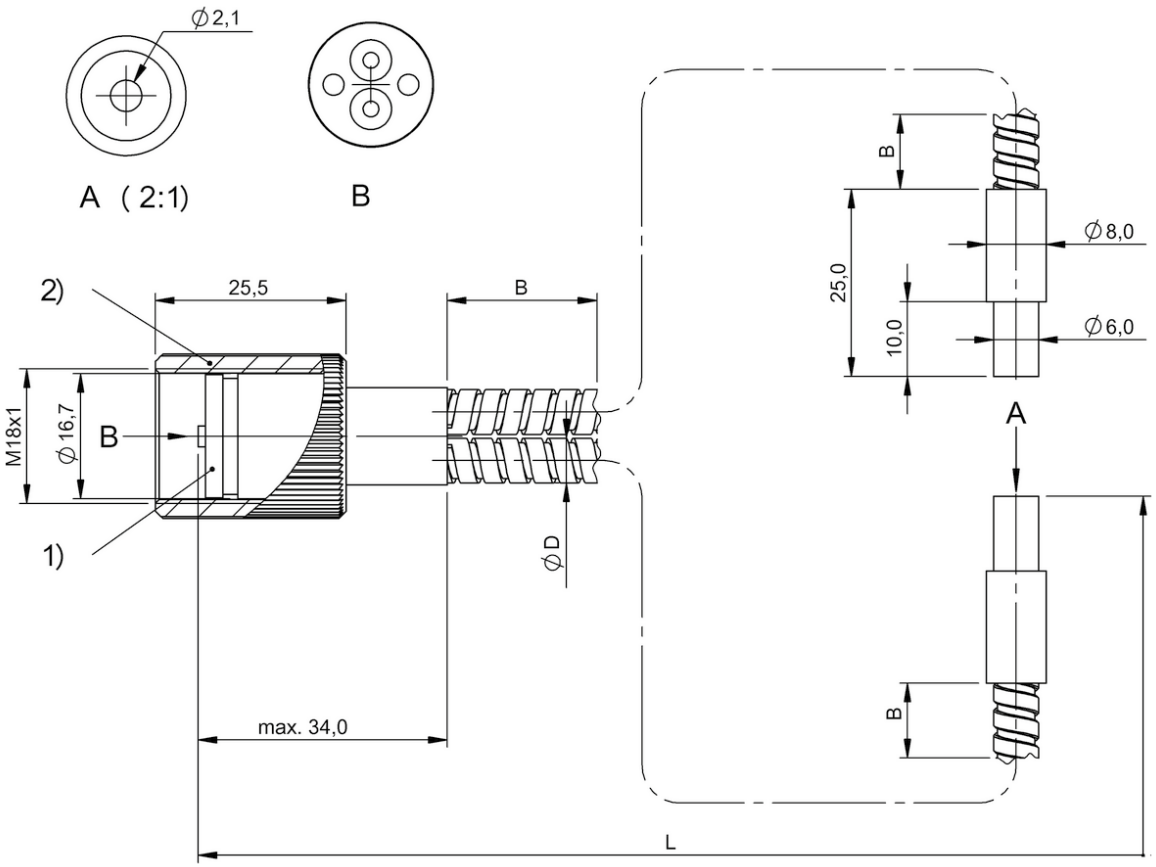

1) Disc removable, 2) cap nut

BFO003Y, BFO003Z

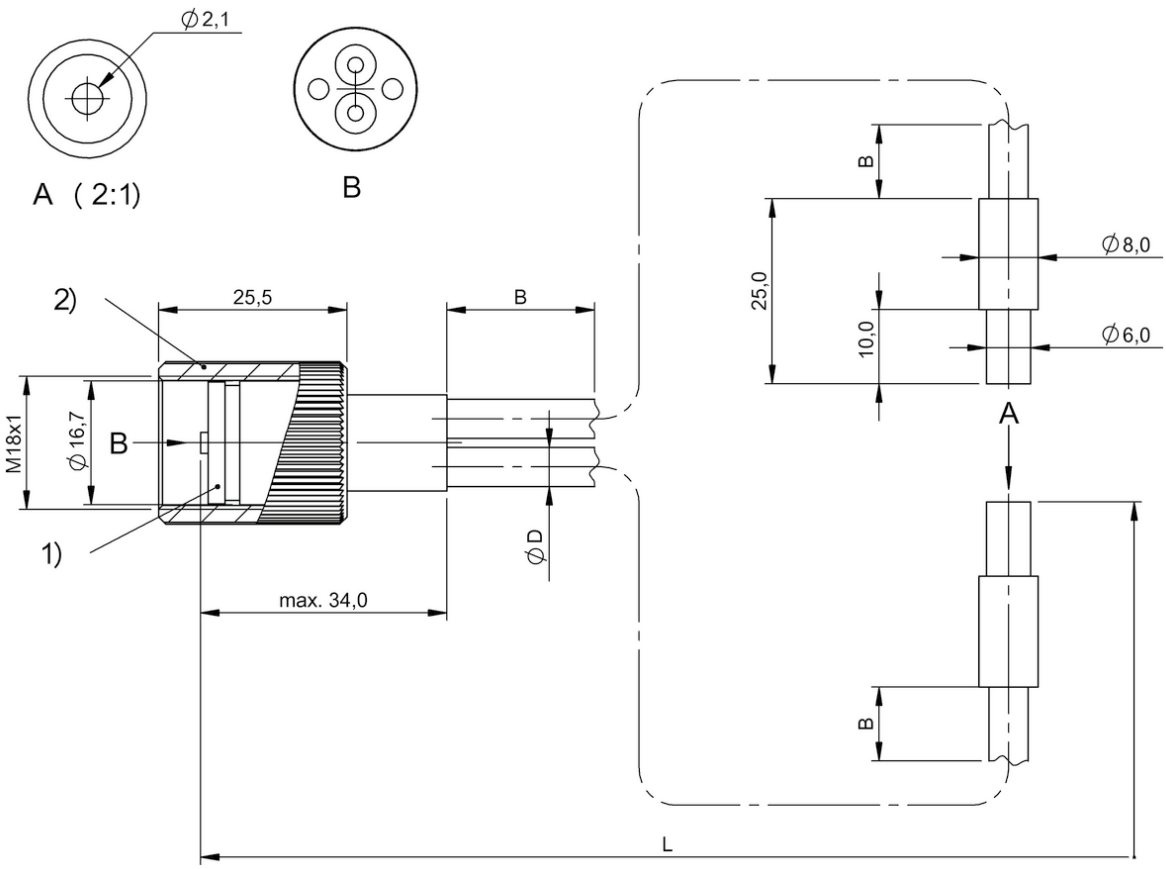

1) Disc removable, 2) cap nut

BFO0042

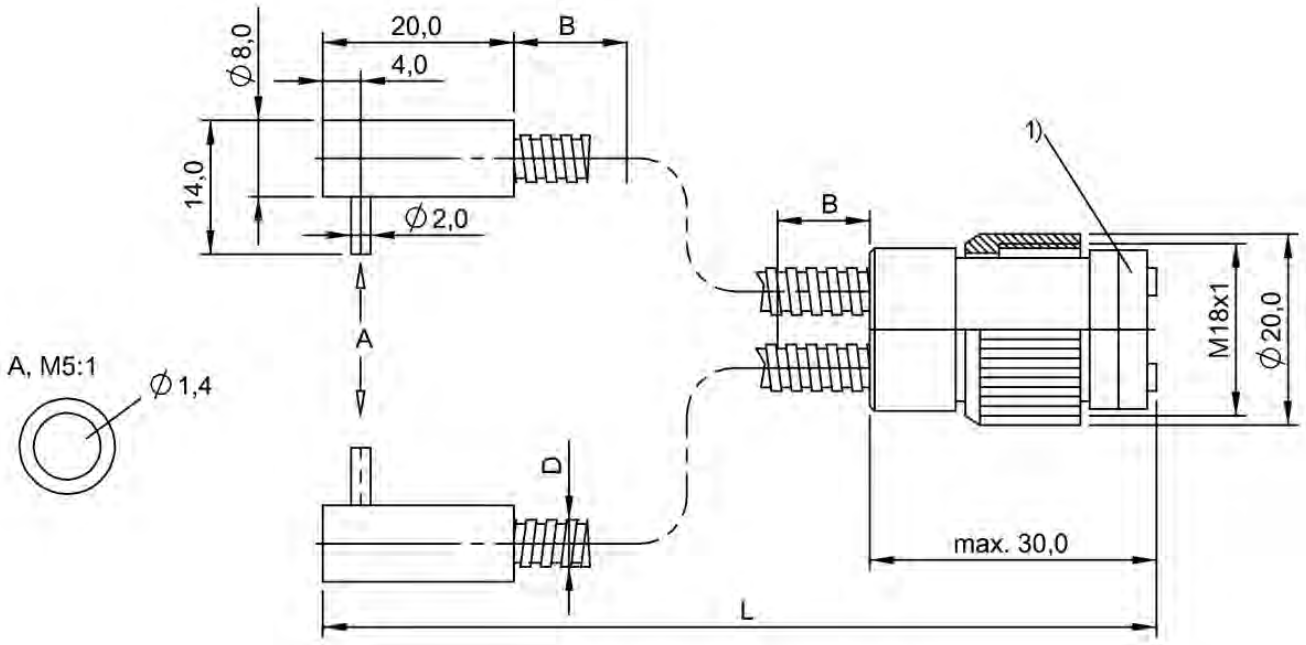

1) Disc removable

BF0001P, BF0001R

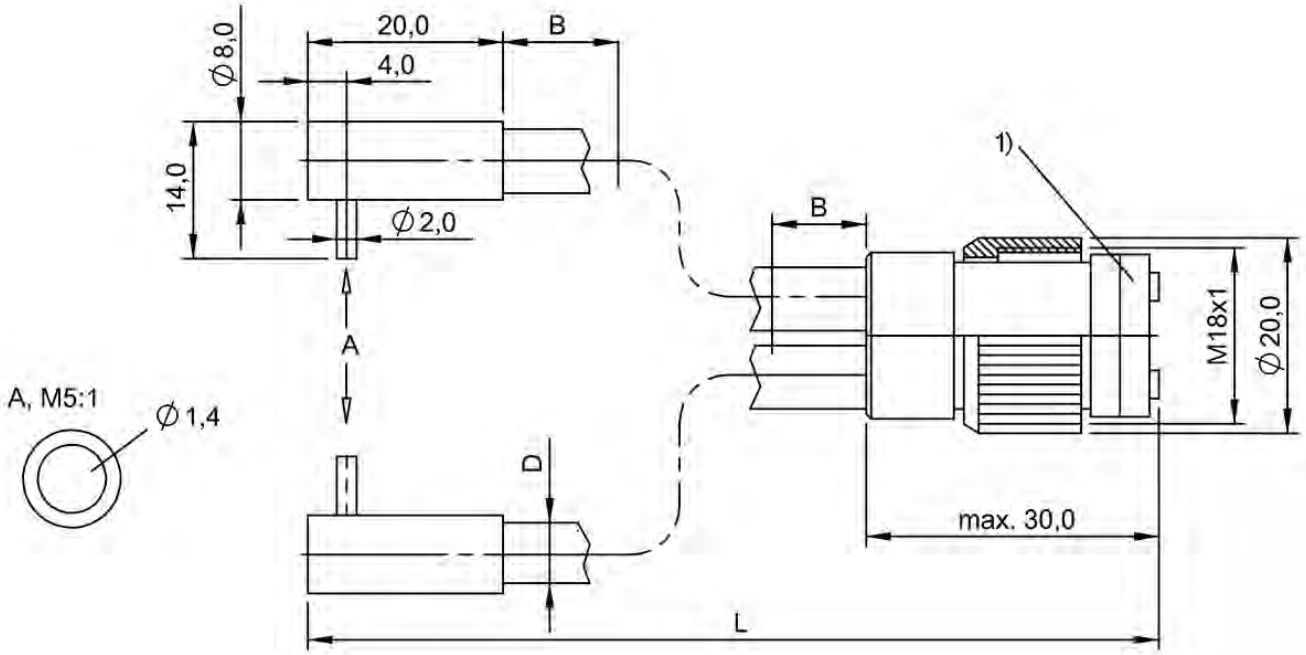

1) Disc removable

BF0001U, BF0001W

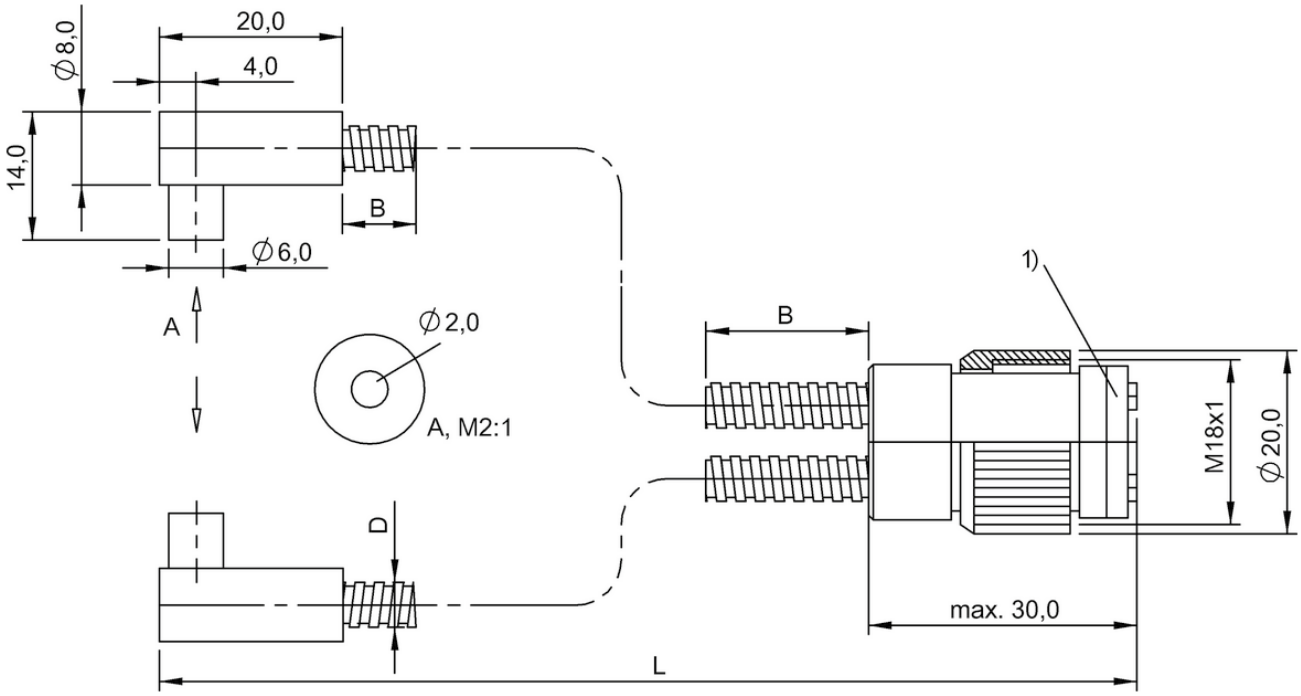

1) Disc removable

BFO0013, BFO0014

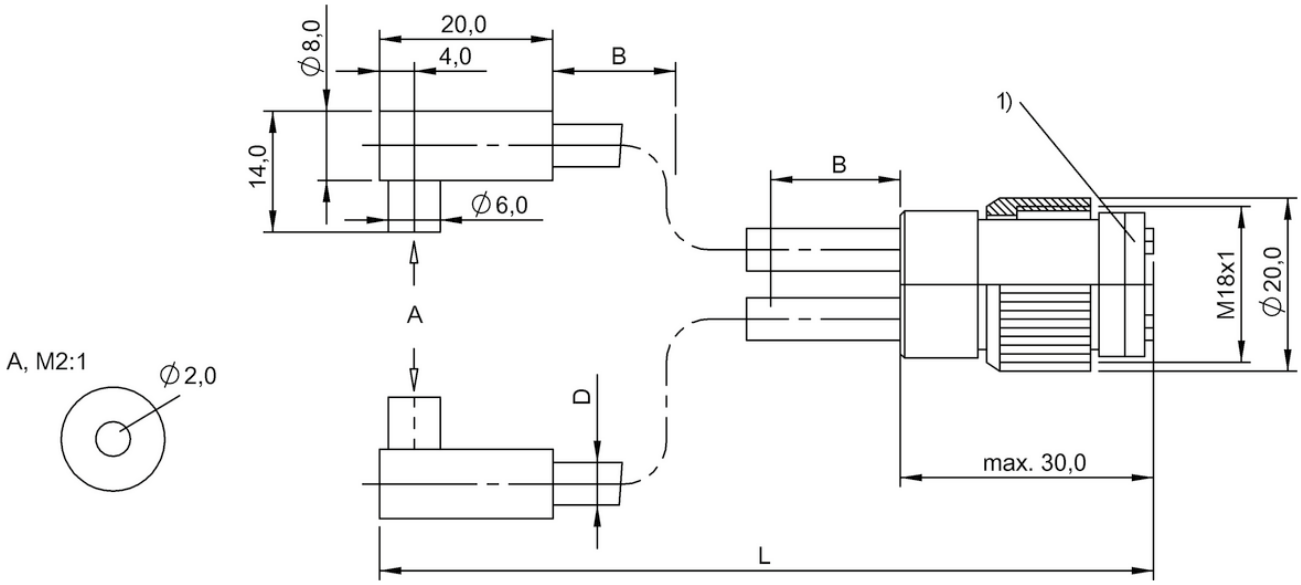

1) Disc removable

BFO0019, BFO001A

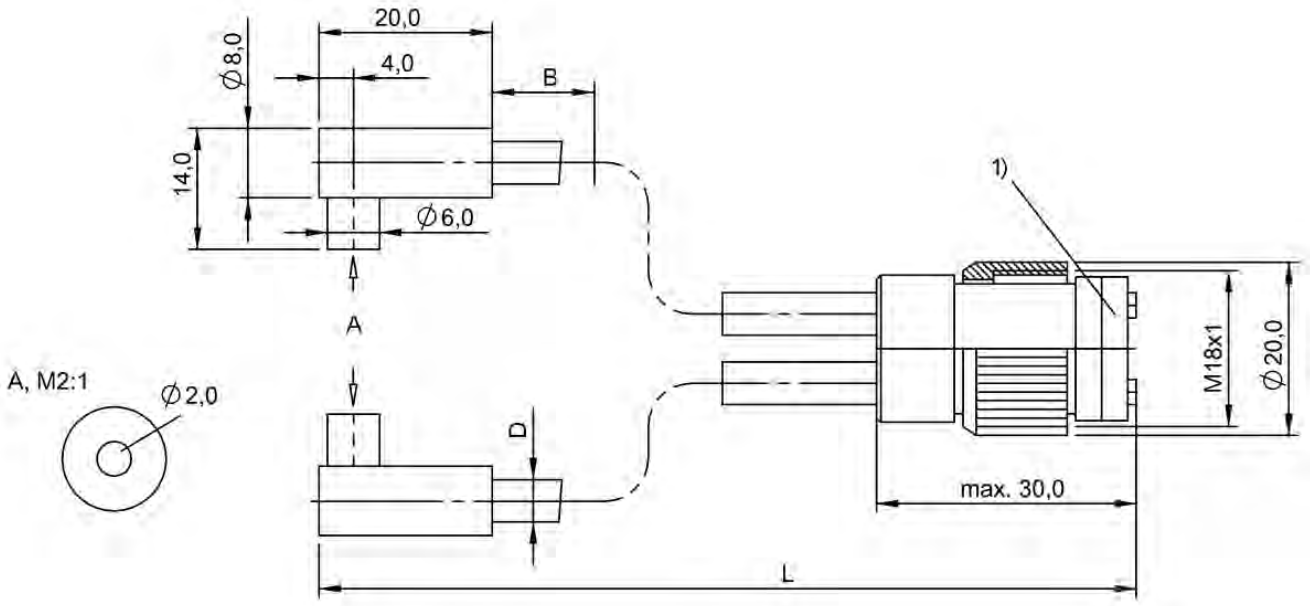

1) Disc removable

BF0001F, BF0001H

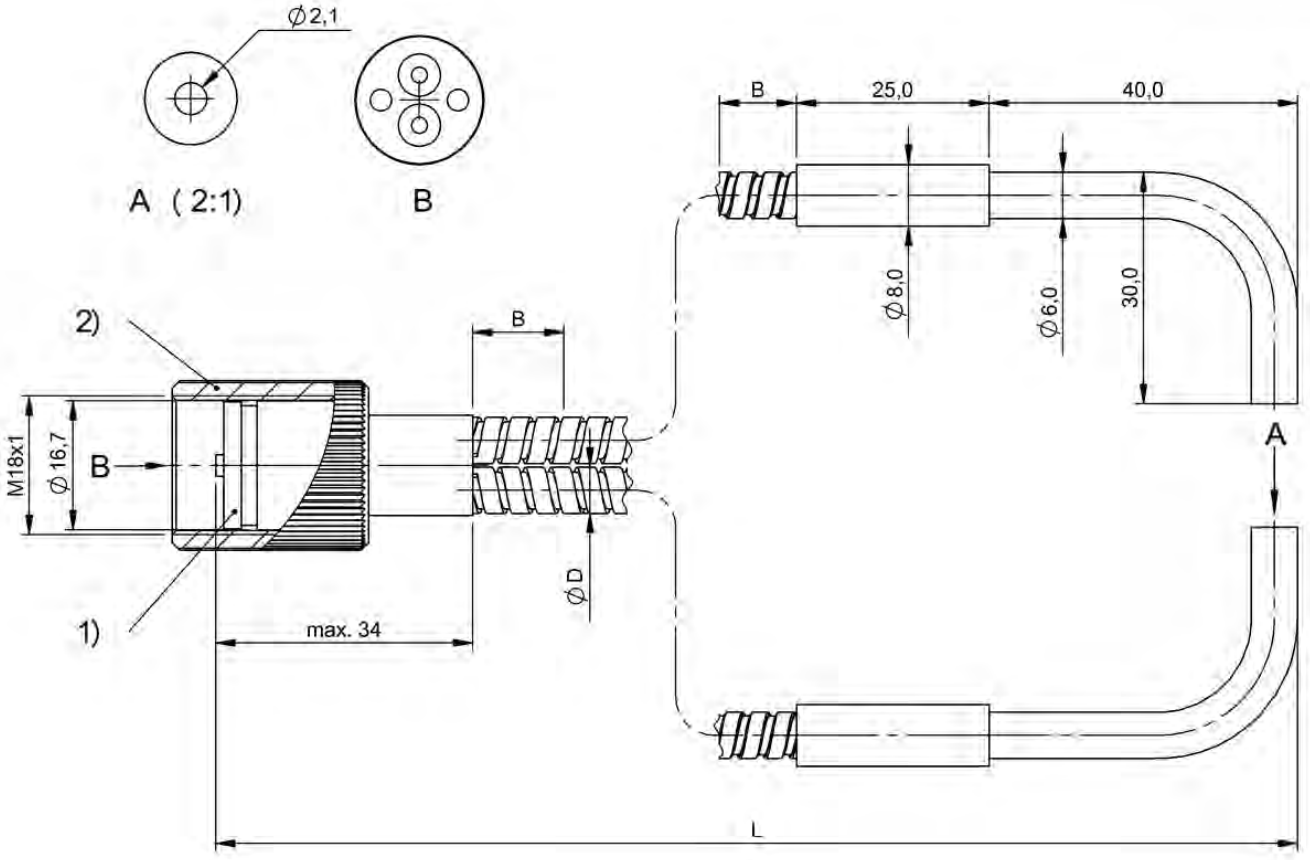

1) Disc removable, 2) cap nut

BF00047, BF00049, BF0004A

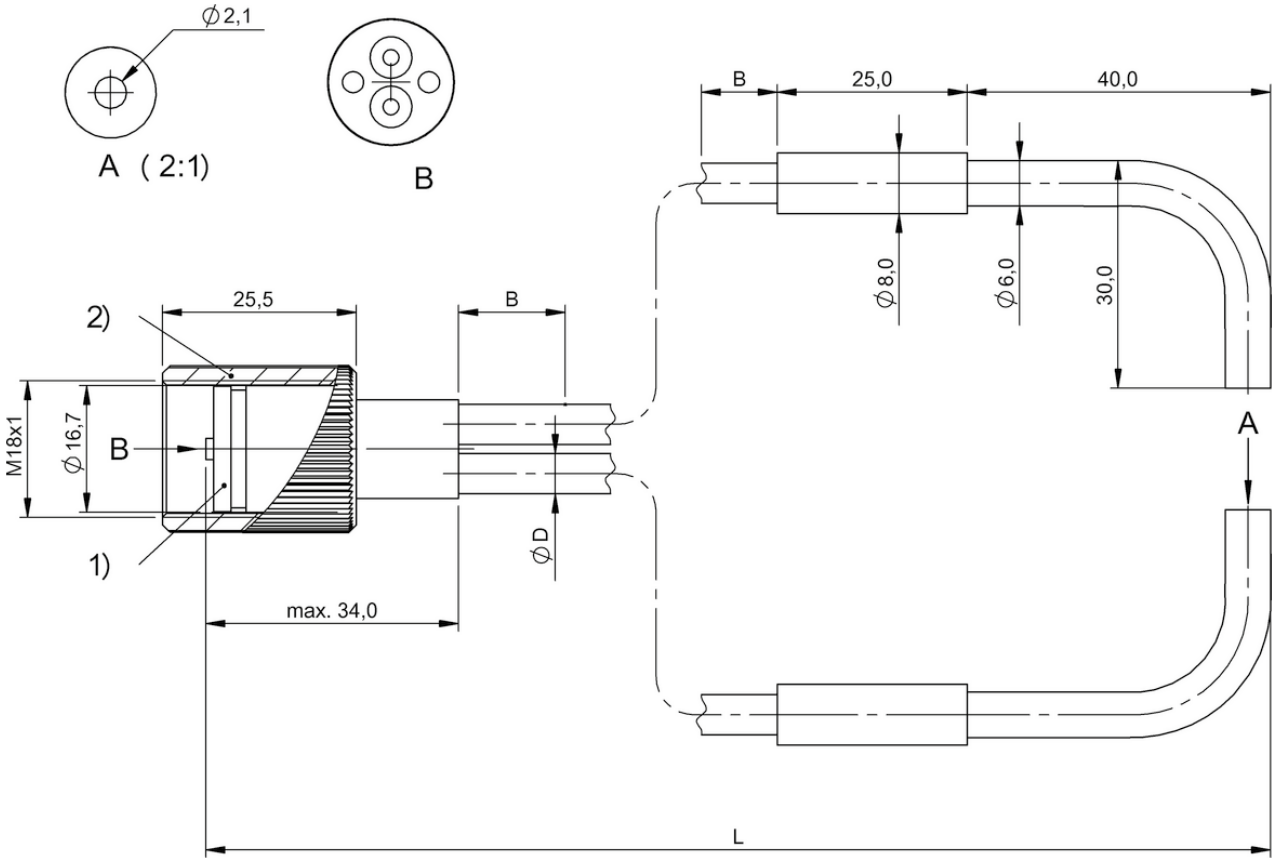

1) Disc removable, 2) cap nut

BFO004C, BFO004F

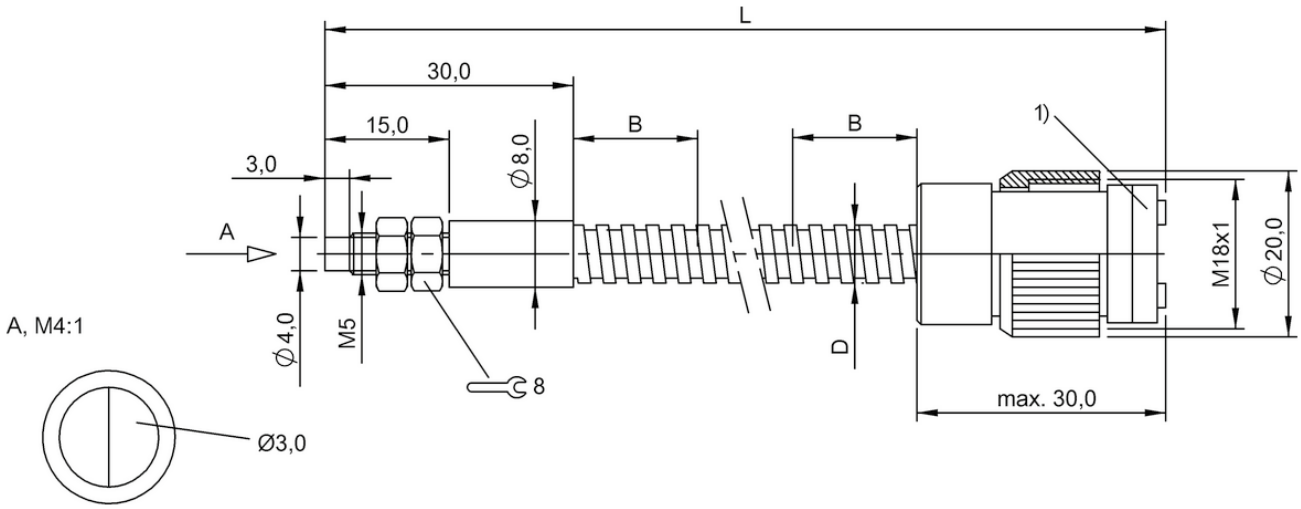

1) Disc removable

BFO0026, BFO0027, BFO00H3

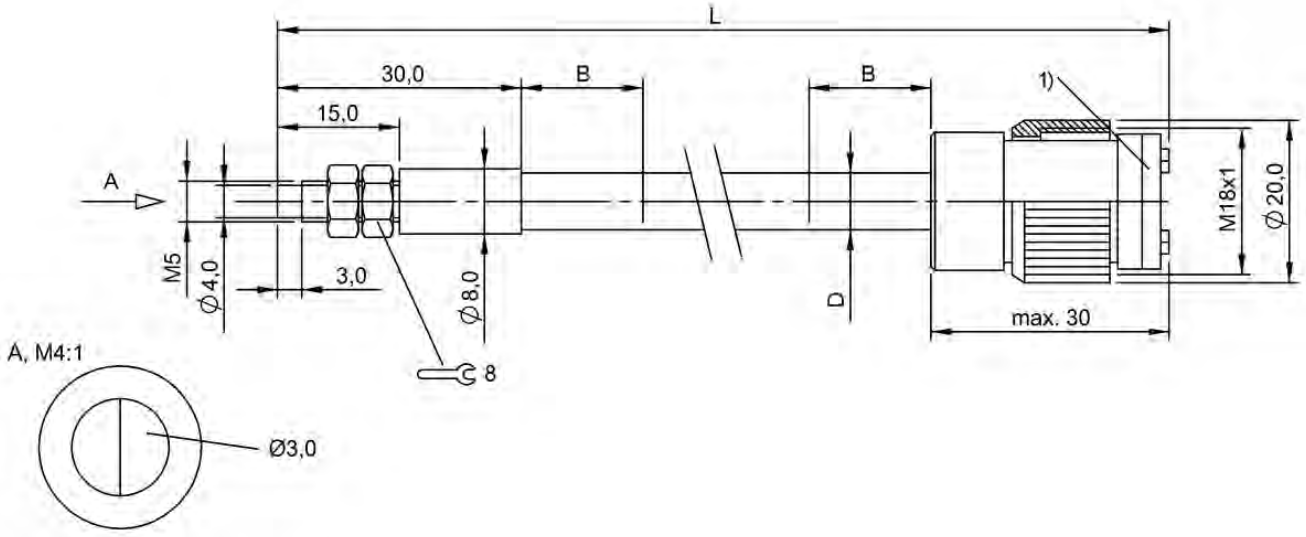

1) Disc removable

BFO002F, BFO002H

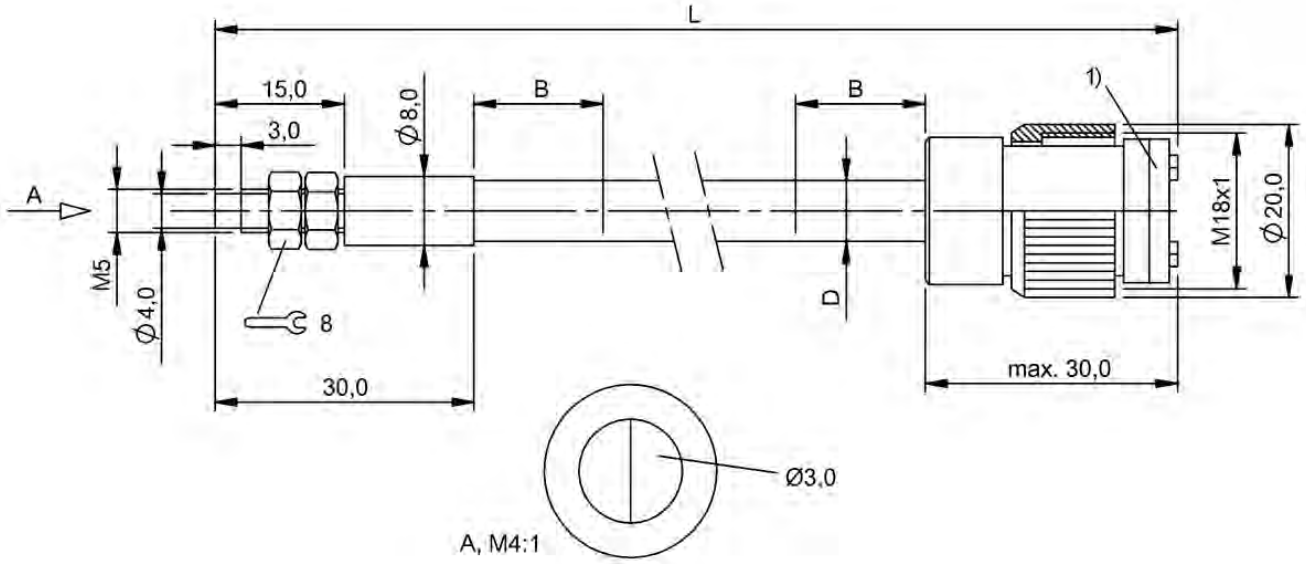

1) Disc removable

BFO002M, BFO002N

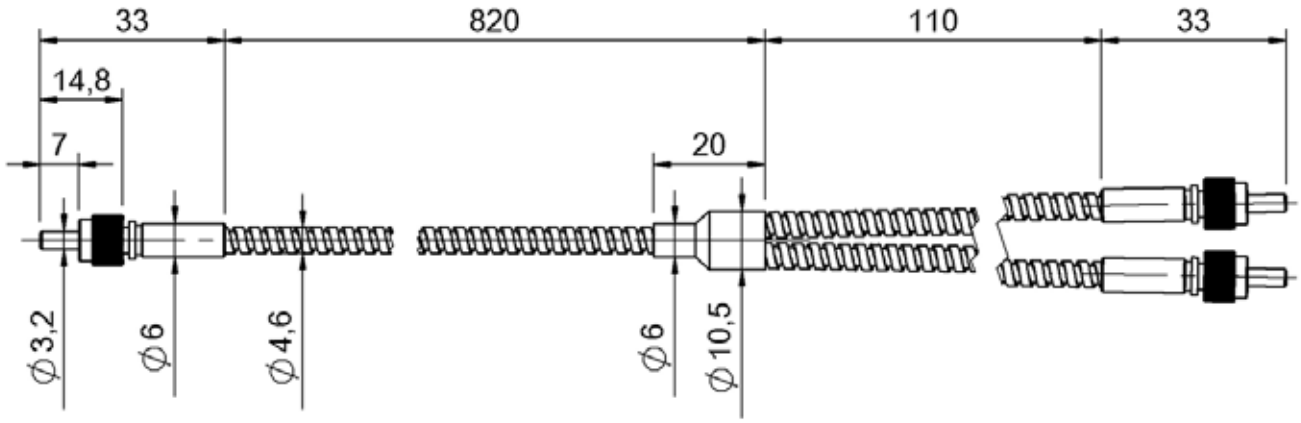

BFO00H8

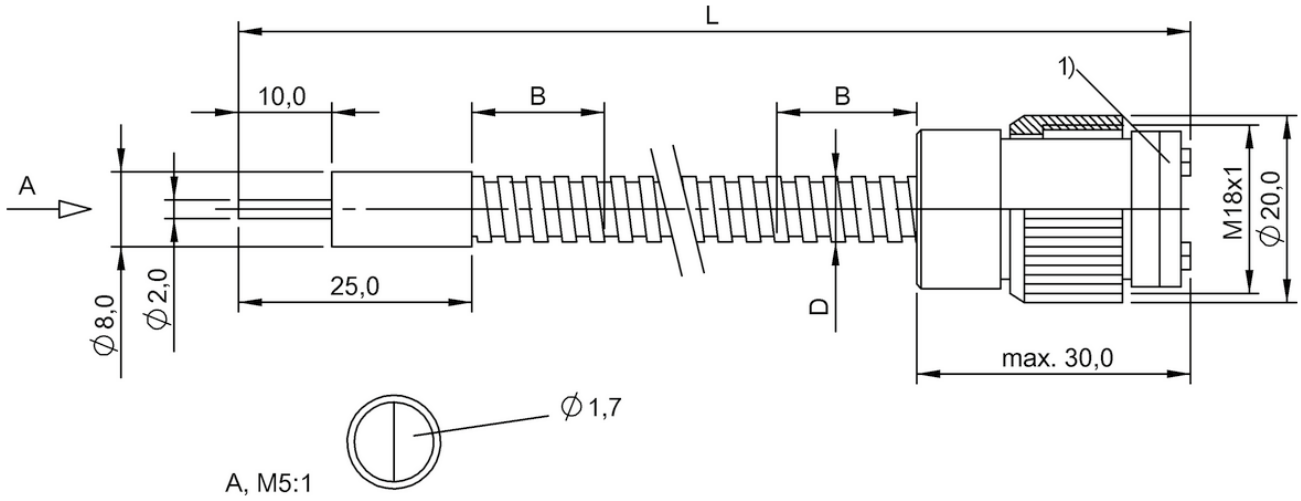

1) Disc removable

BFO003R, BFO003T

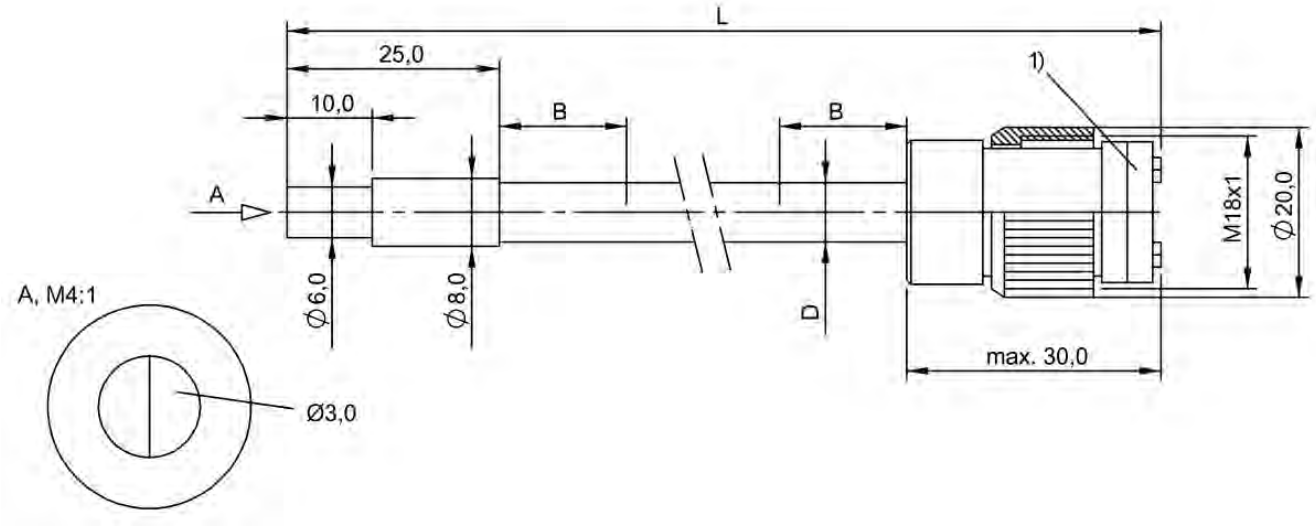

1) Disc removable

BFO002U, BFO002W

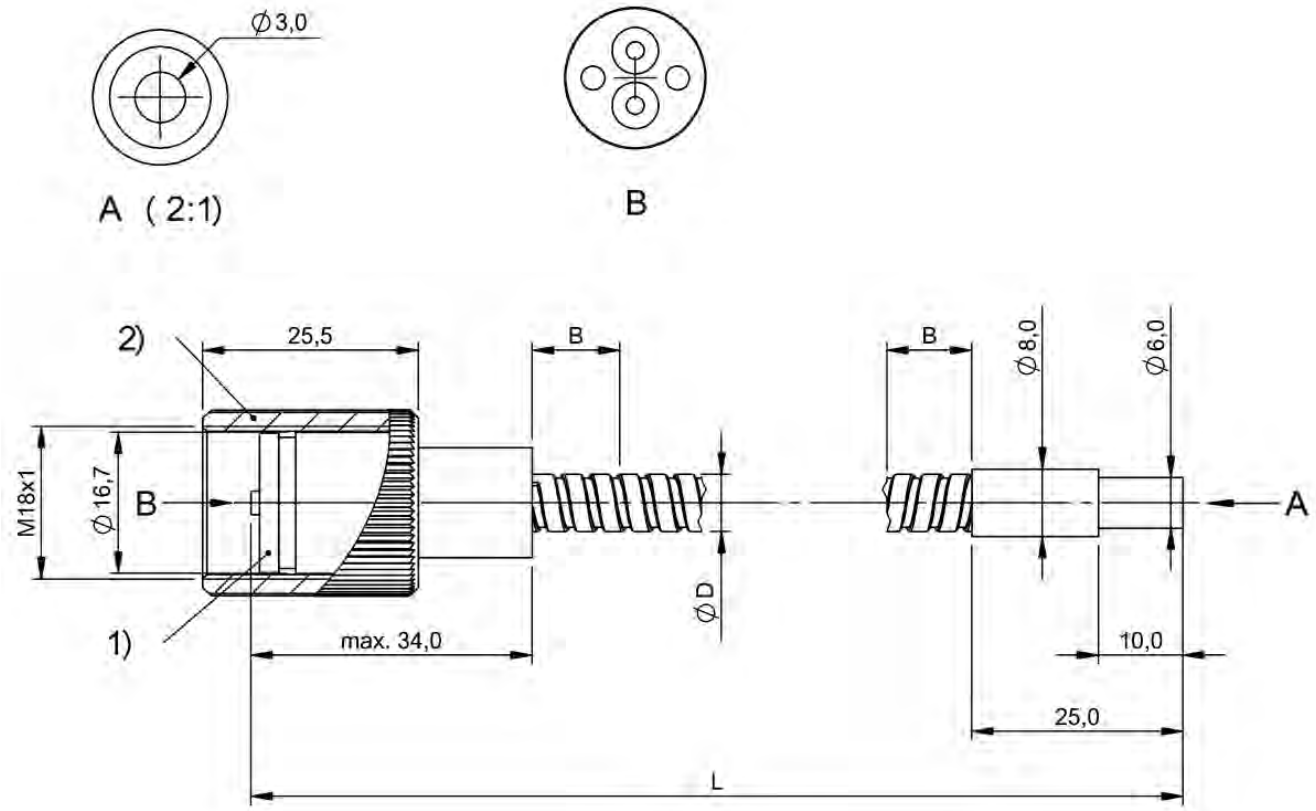

1) Disc removable, 2) cap nut

BFO004M

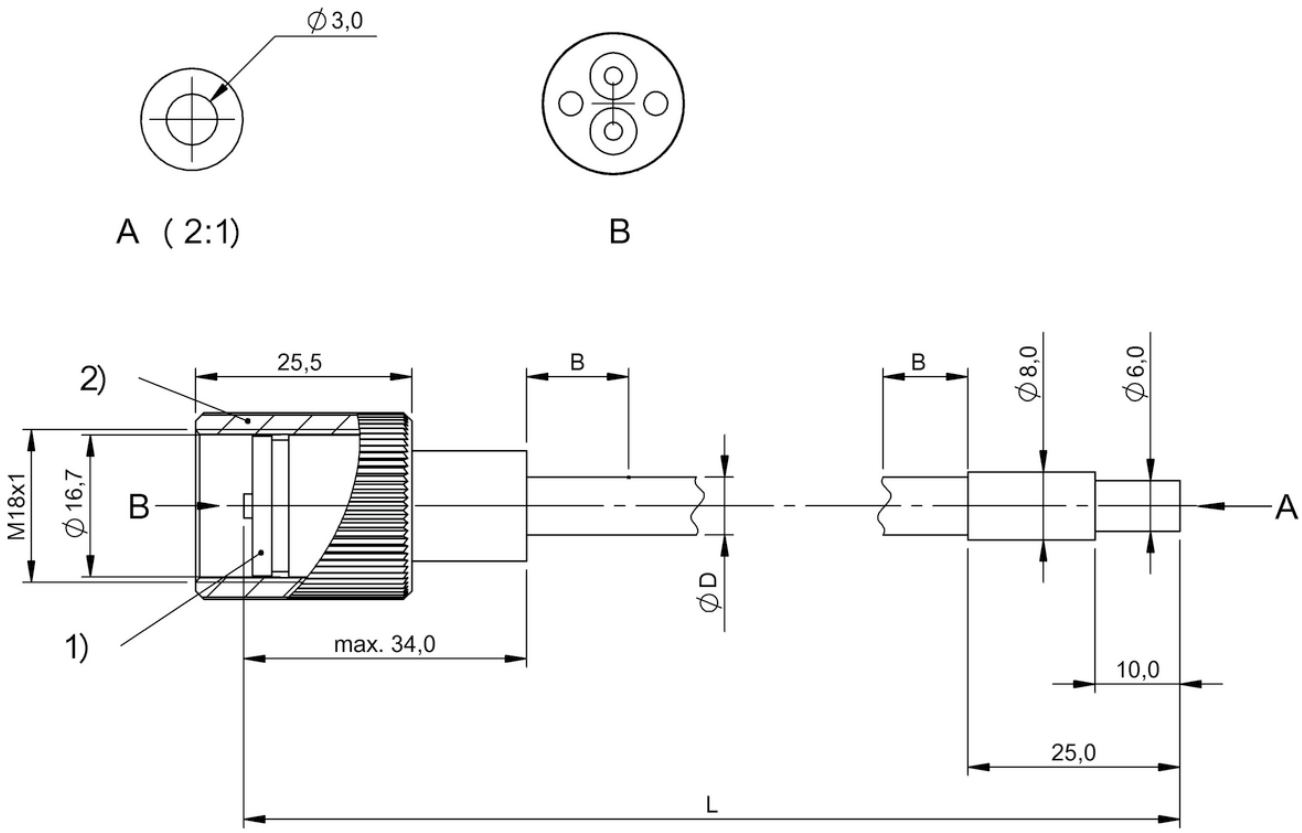

1) Disc removable, 2) cap nut

BFO004P, BFO004R

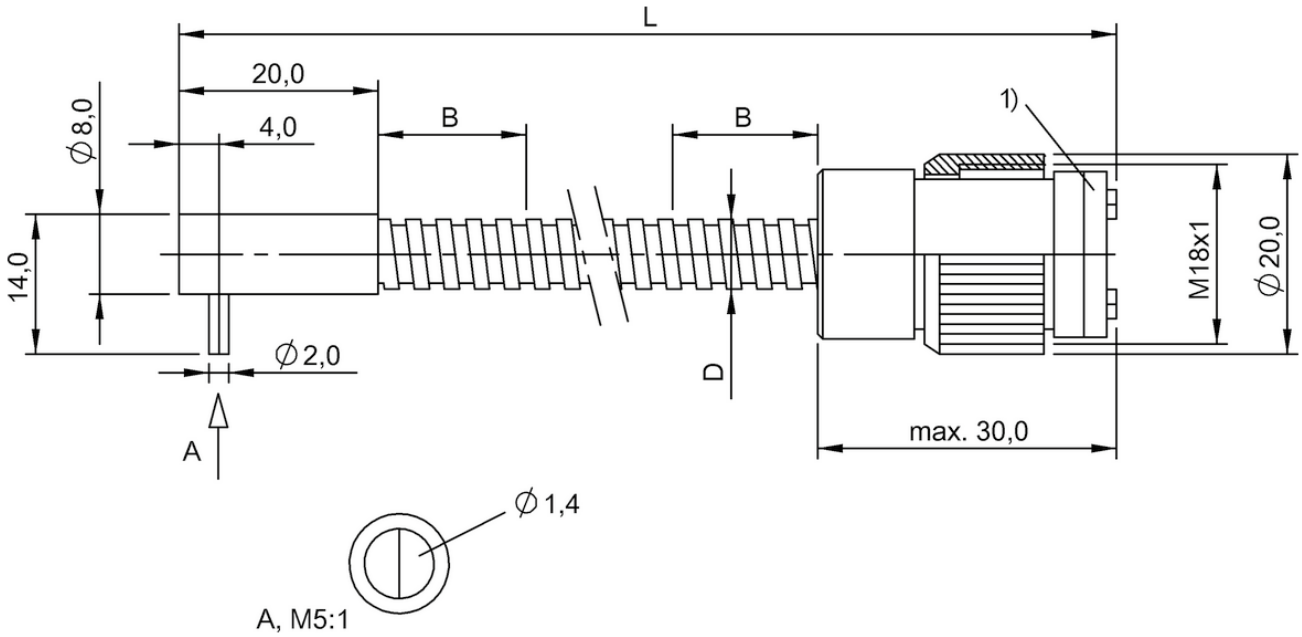

1) Disc removable

BFO003H, BFO003J

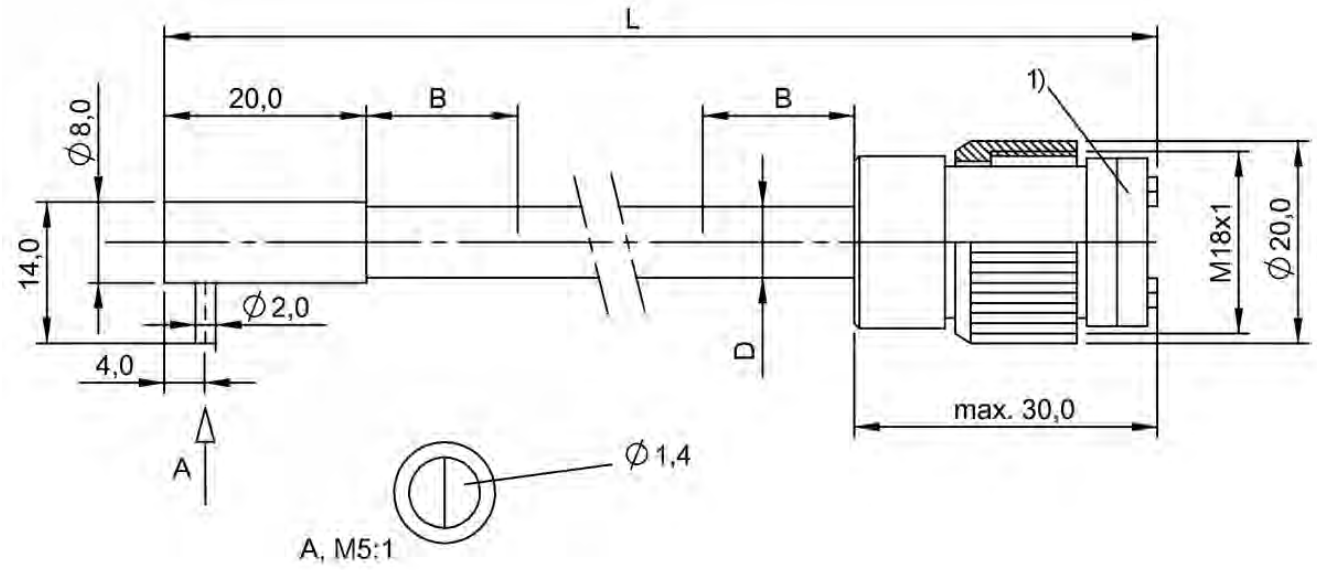

1) Disc removable

BFO003M, BFO003N

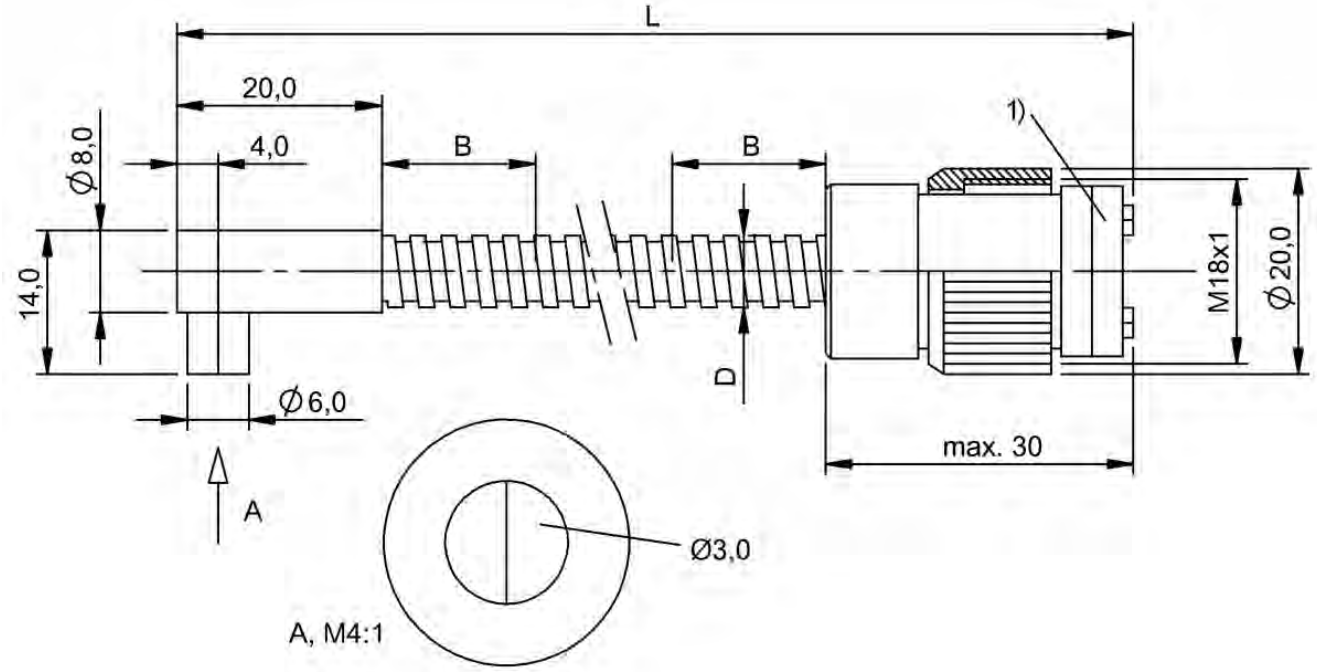

1) Disc removable

BFO0031, BFO0032

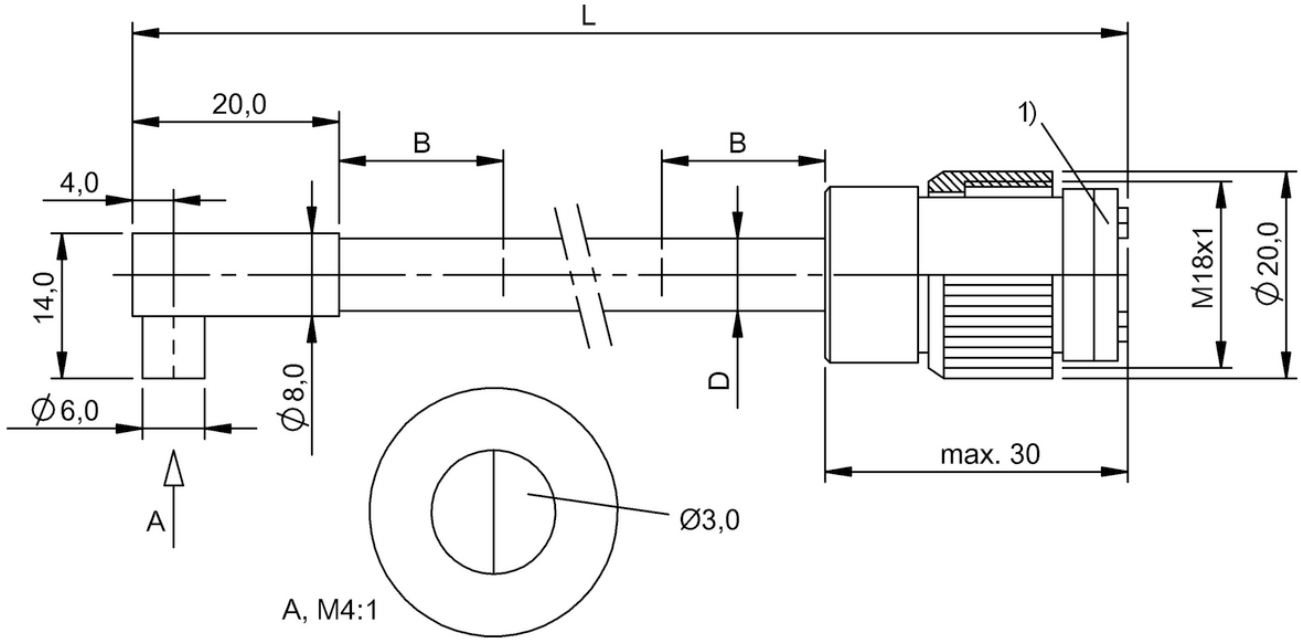

1) Disc removable

BFO0037, BFO0038

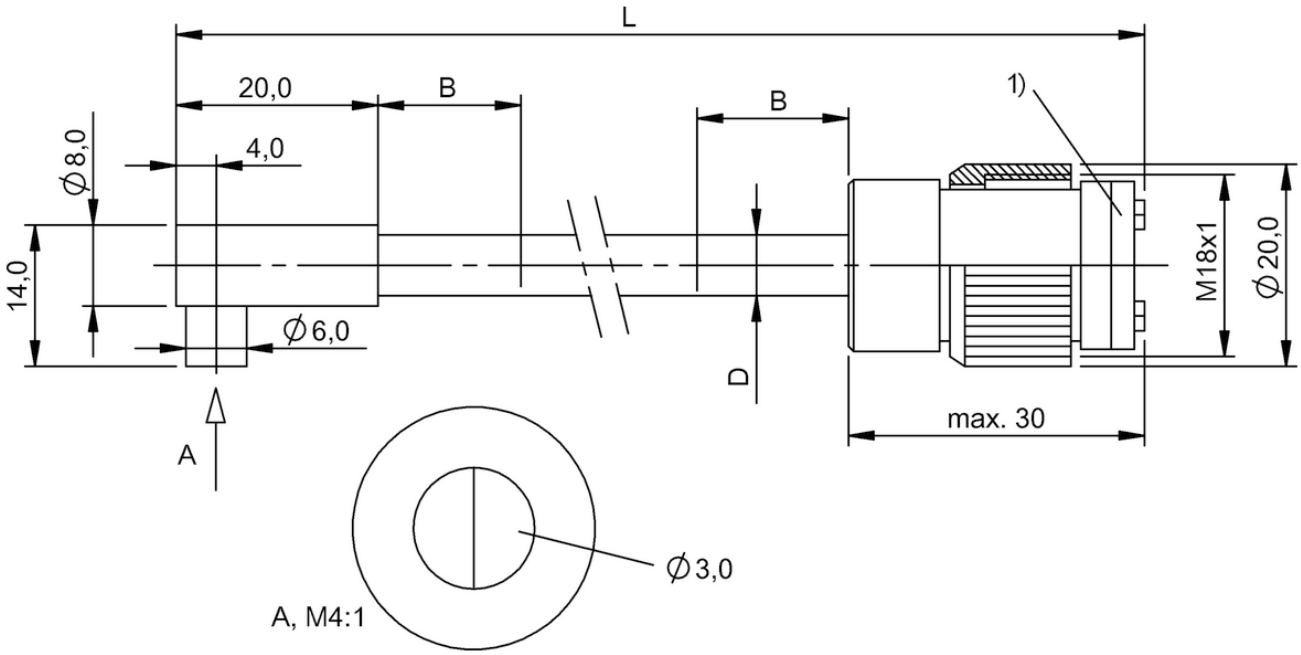

1) Disc removable

BFO003C, BFO003E

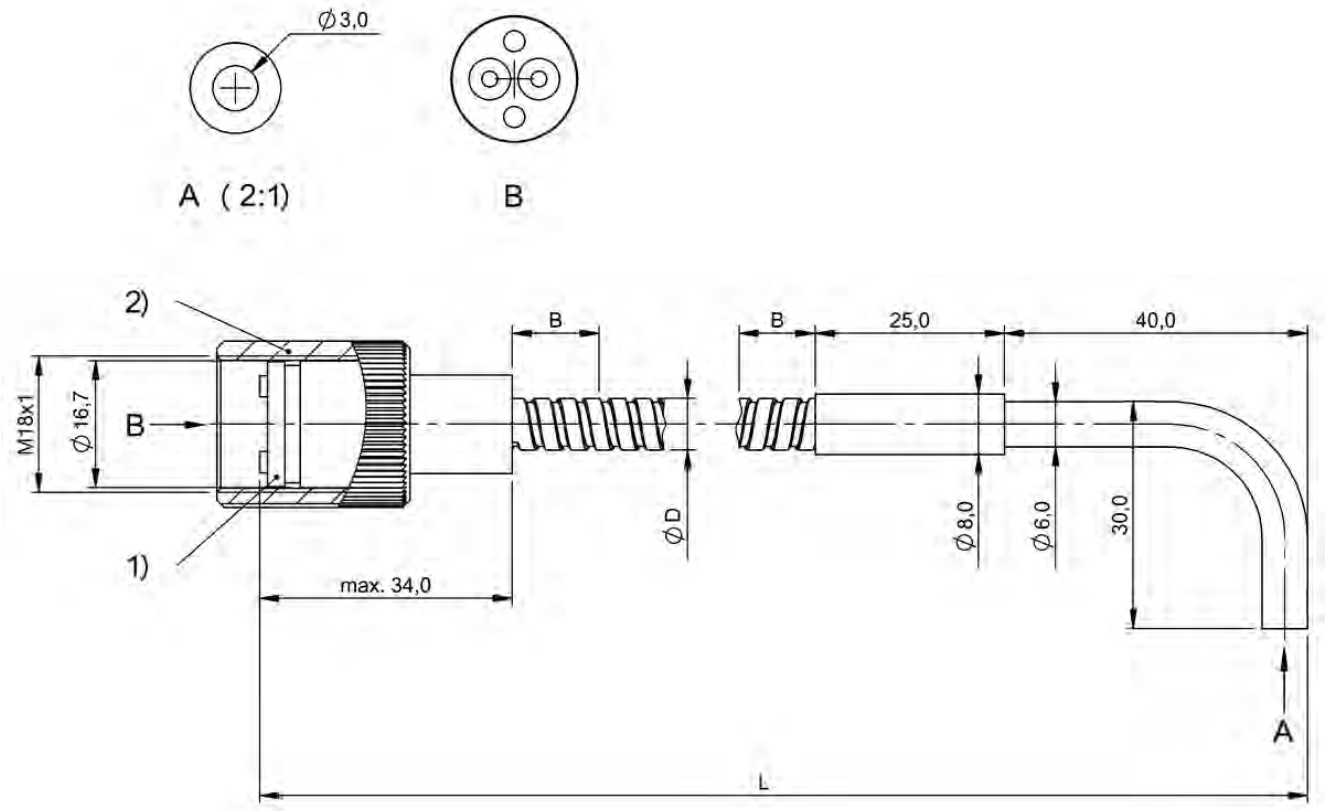

1) Disc removable, 2) cap nut

BFO004U

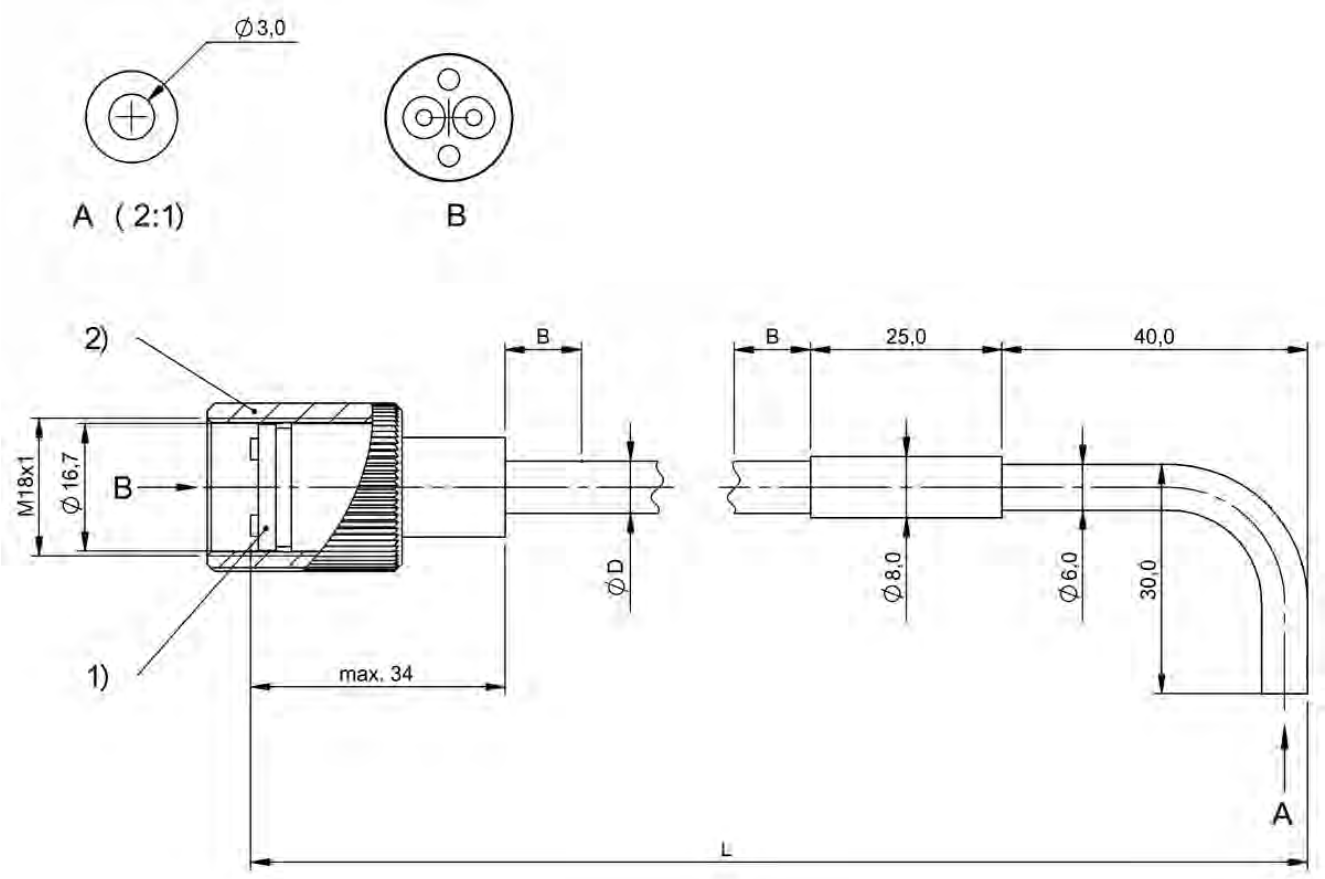

1) Disc removable, 2) cap nut

BFO004Y, BFO004Z

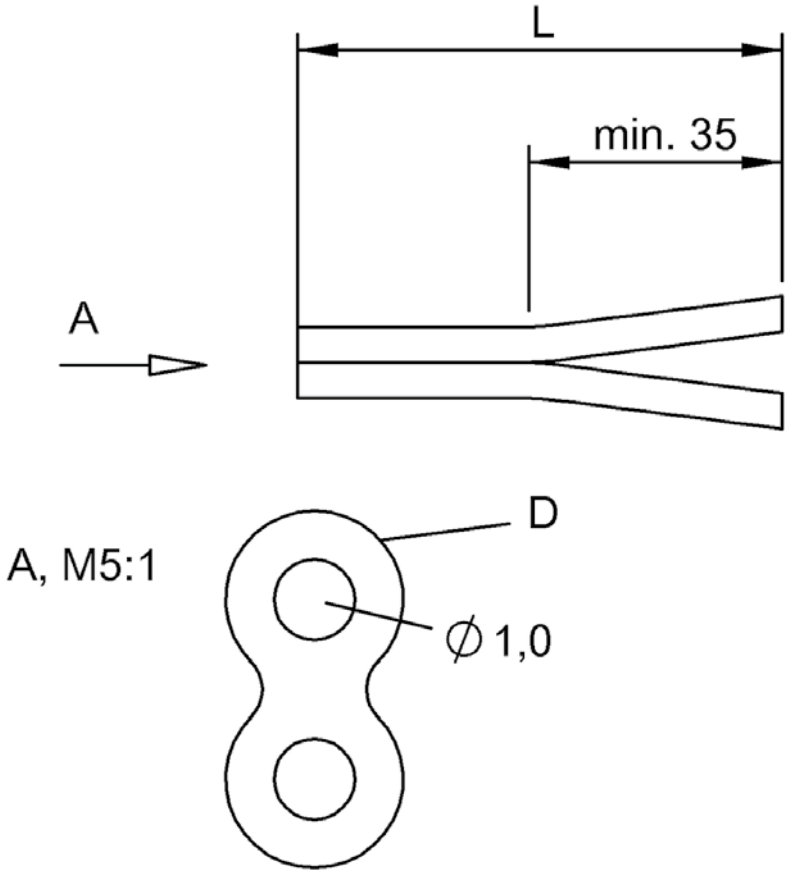

BFO005Y

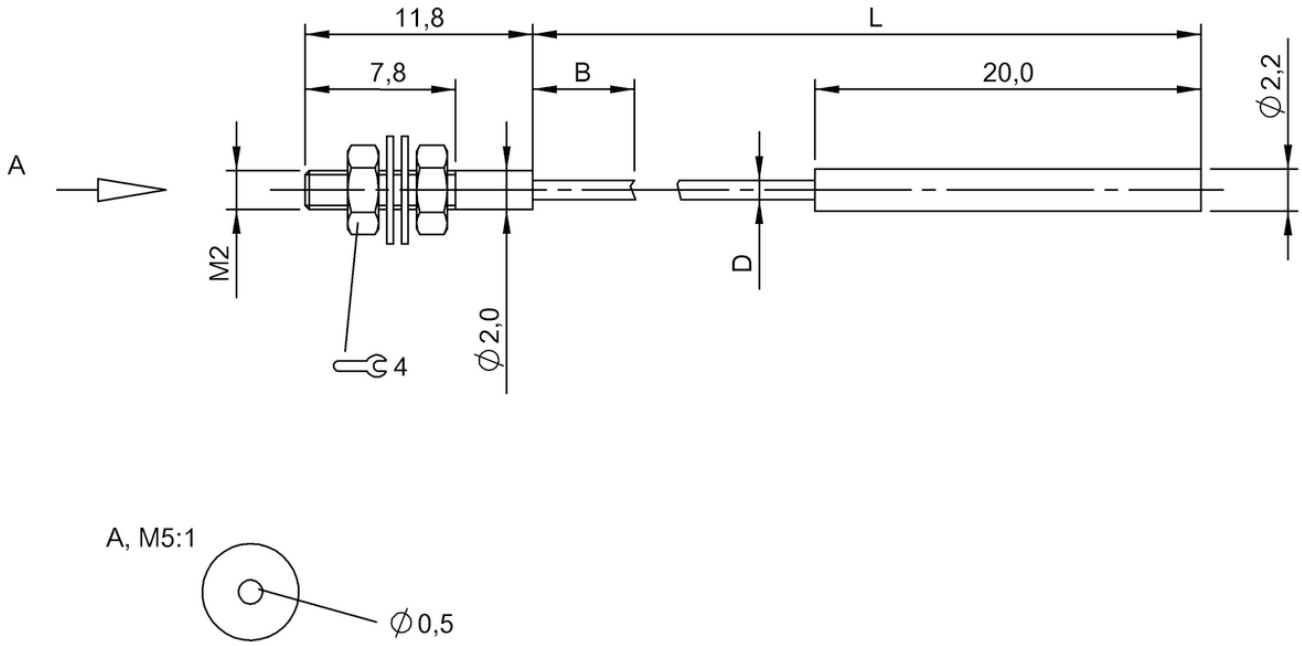

BFO000C

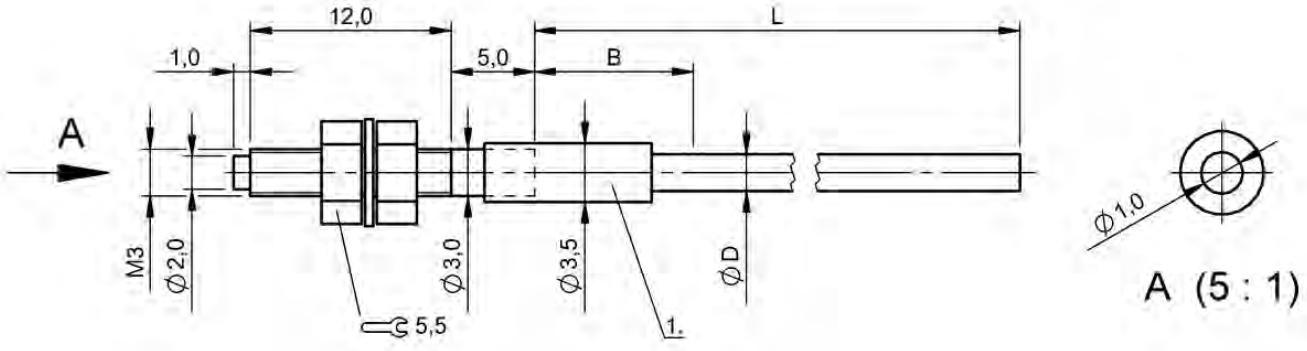

1) Protective tube

BFO005R

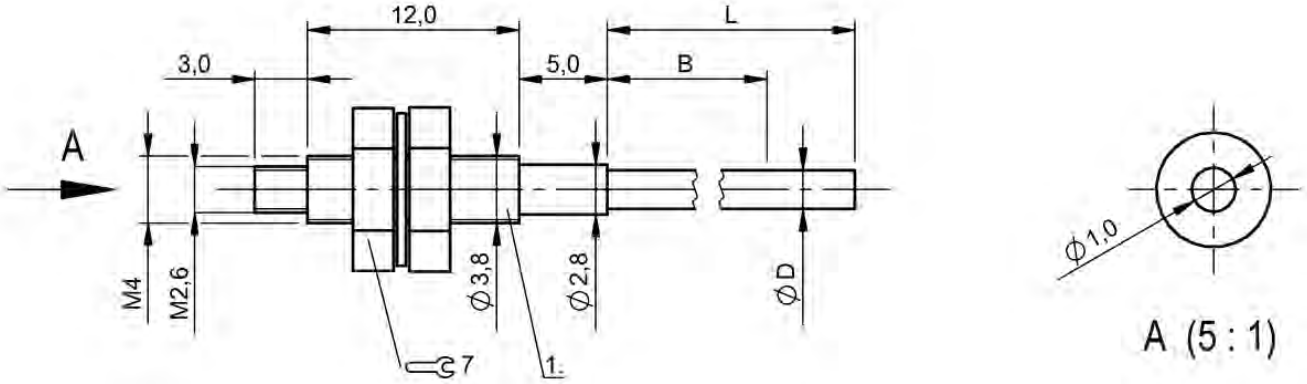

1) Protective tube

BFO005M

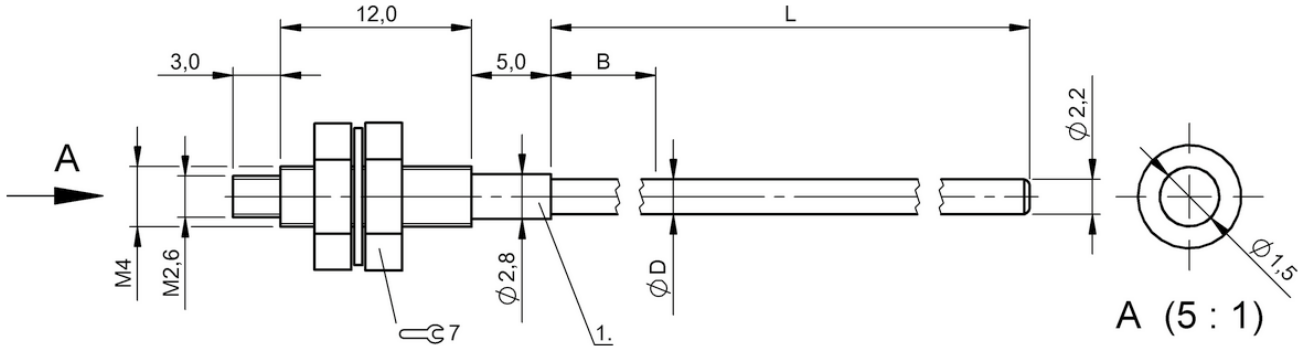

1) Protective tube

BFO005U

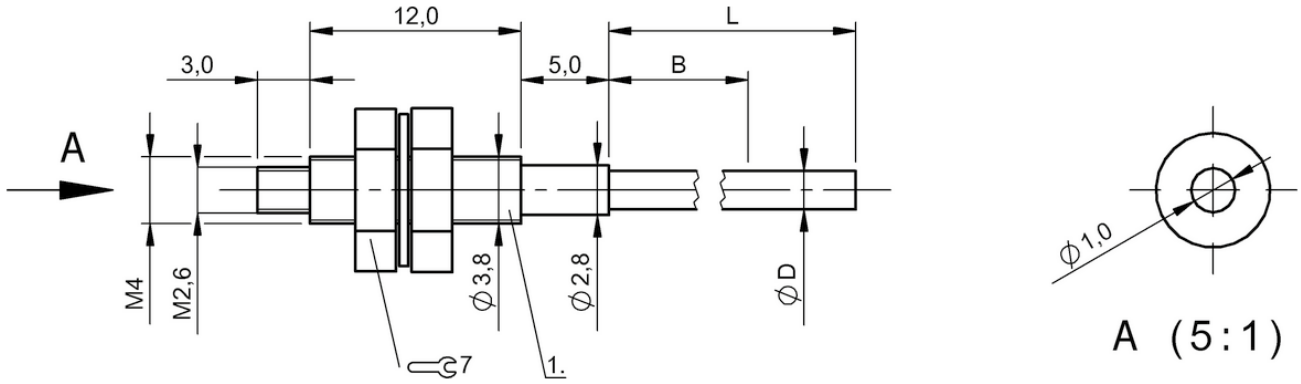

1) Protective tube

BFO005T

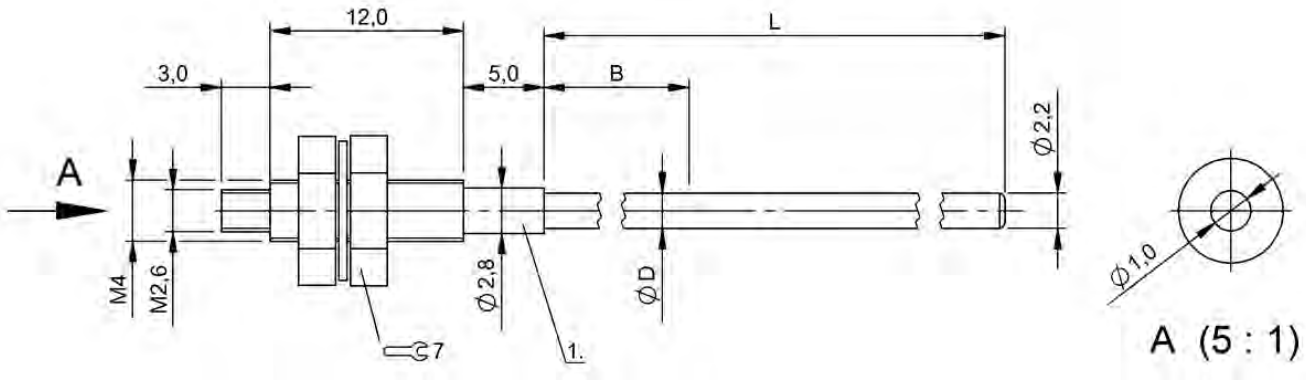

1) Protective tube

BFO005W

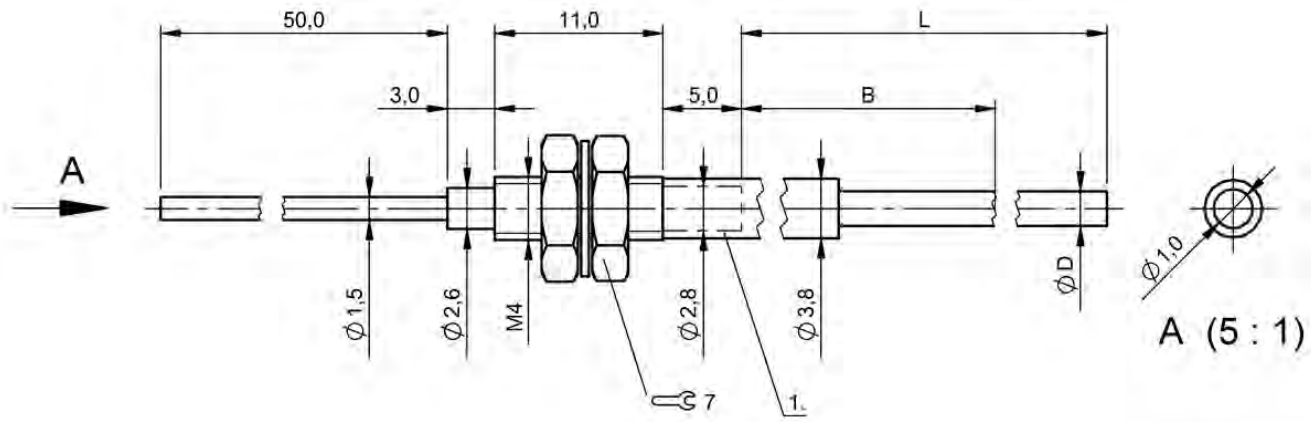

1) Protective tube

BFO005N

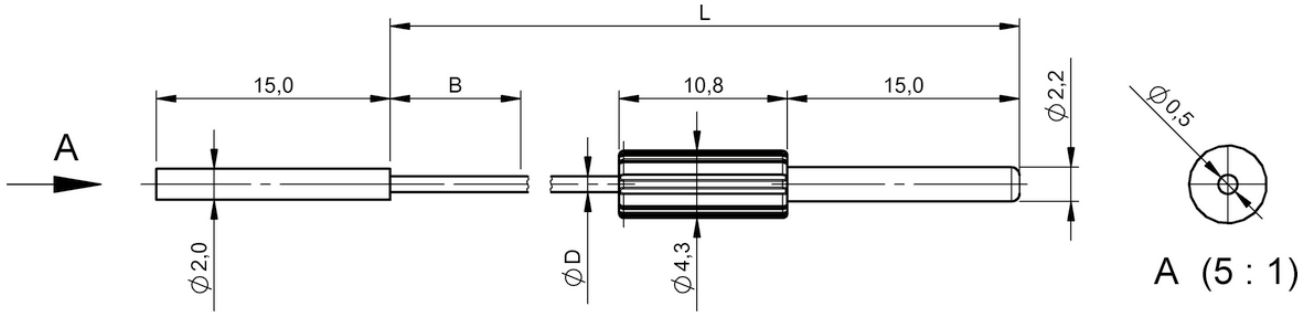

BFO0051

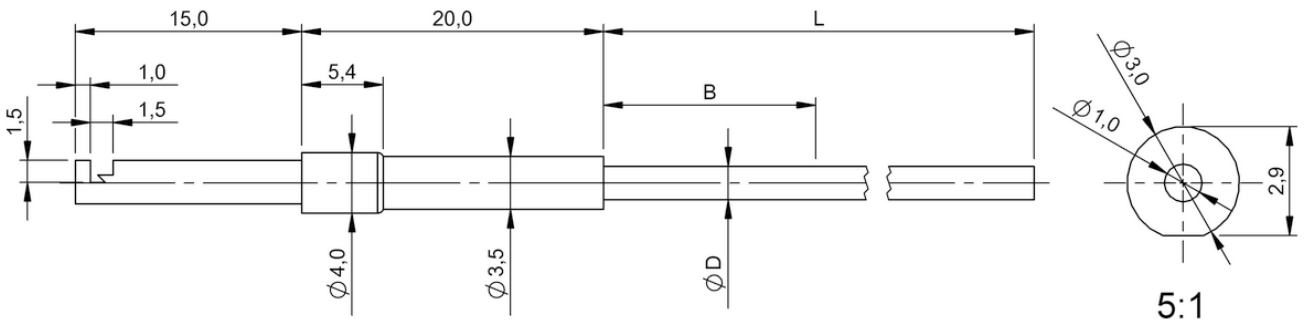

BFO00AY

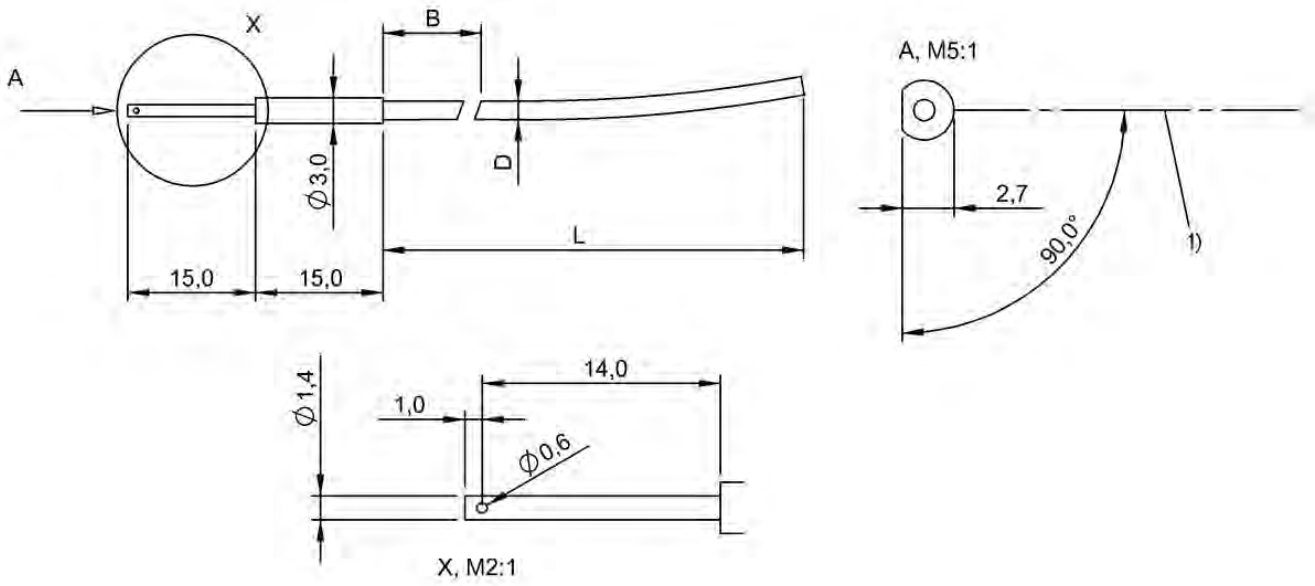

1) Optical axis

BFO005P

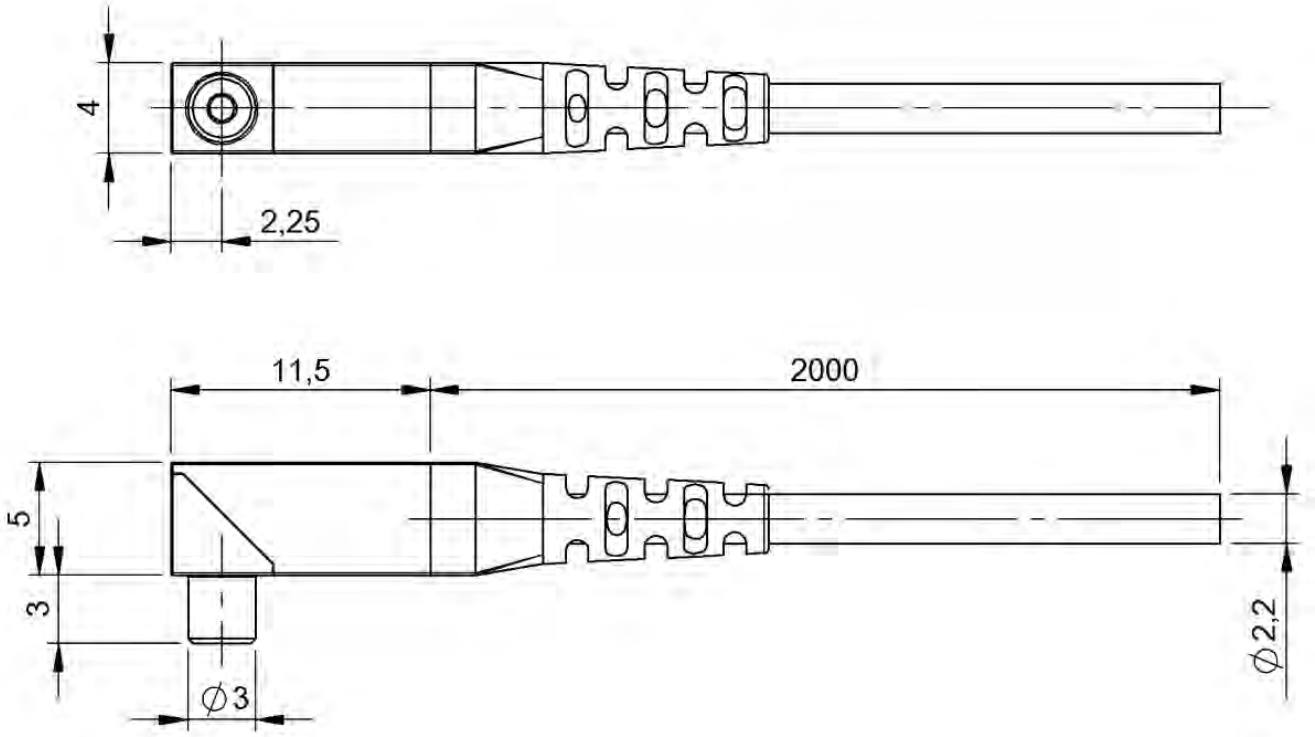

BFO00H6

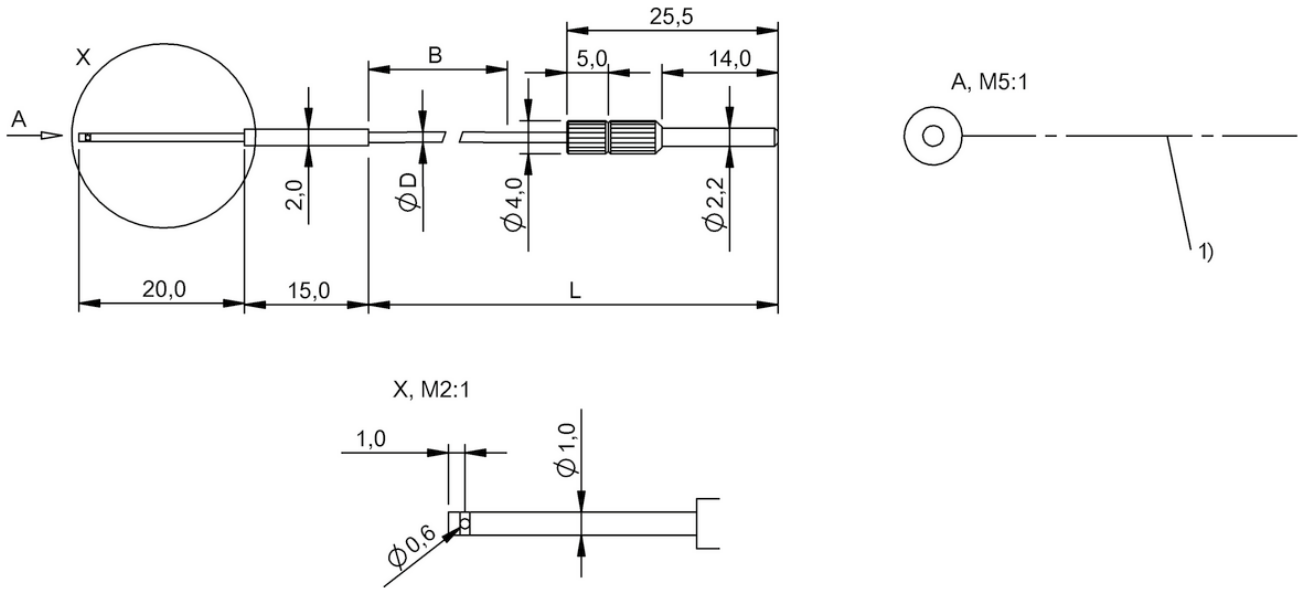

1) Optical axis

BFO0056

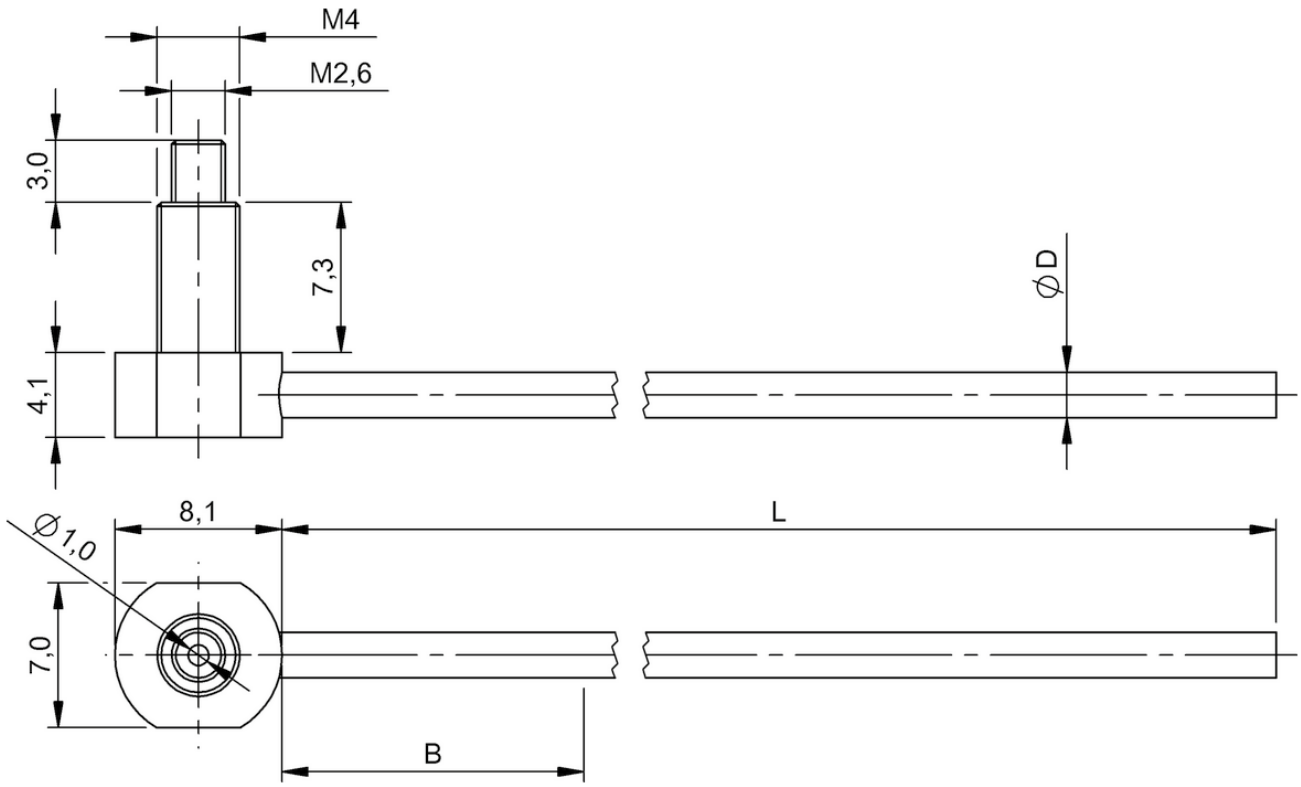

BFO00AW

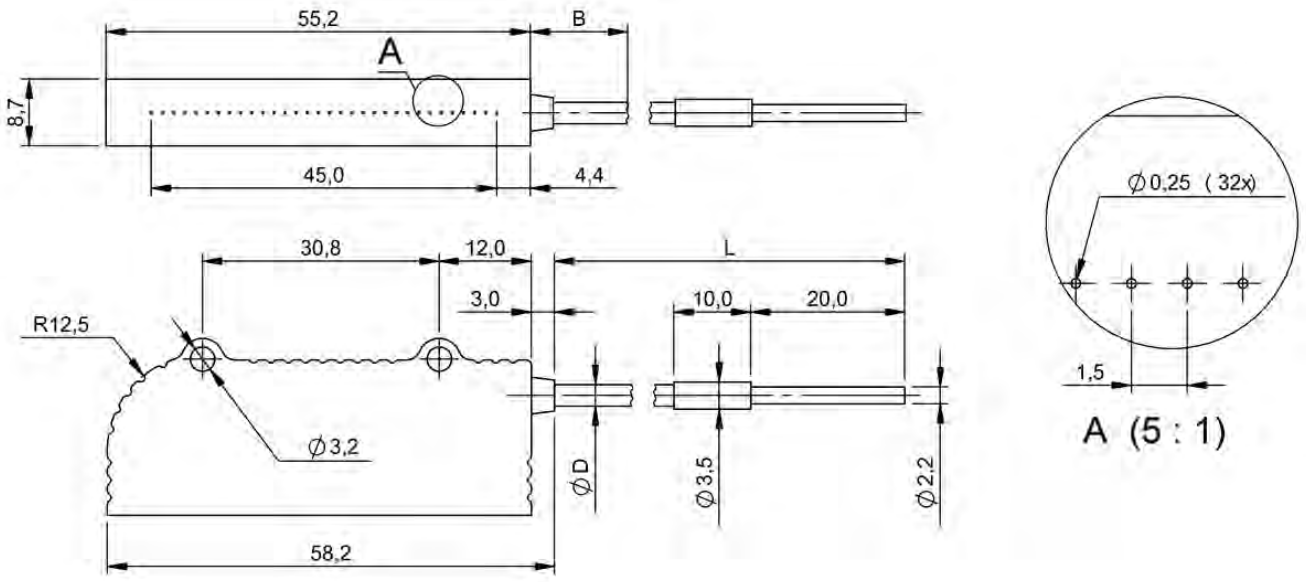

BF000C8

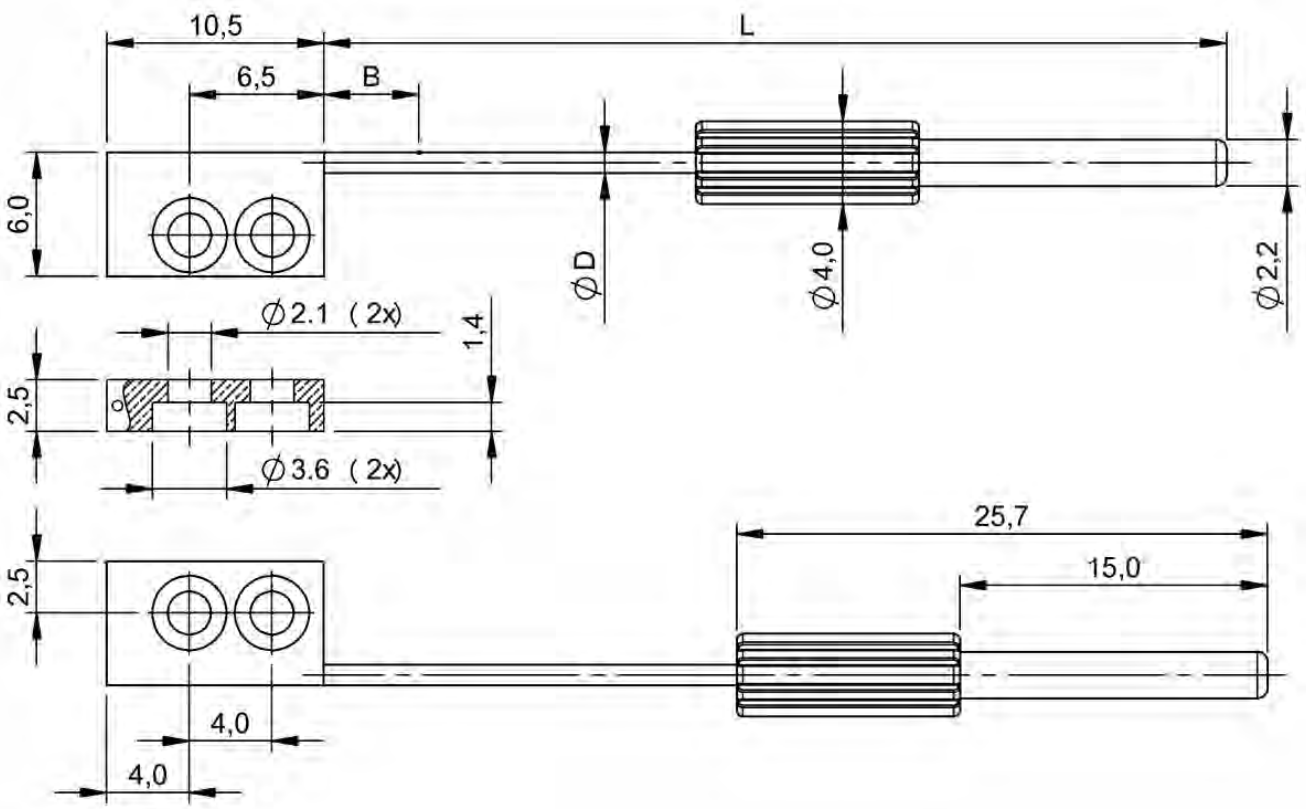

BF000C6

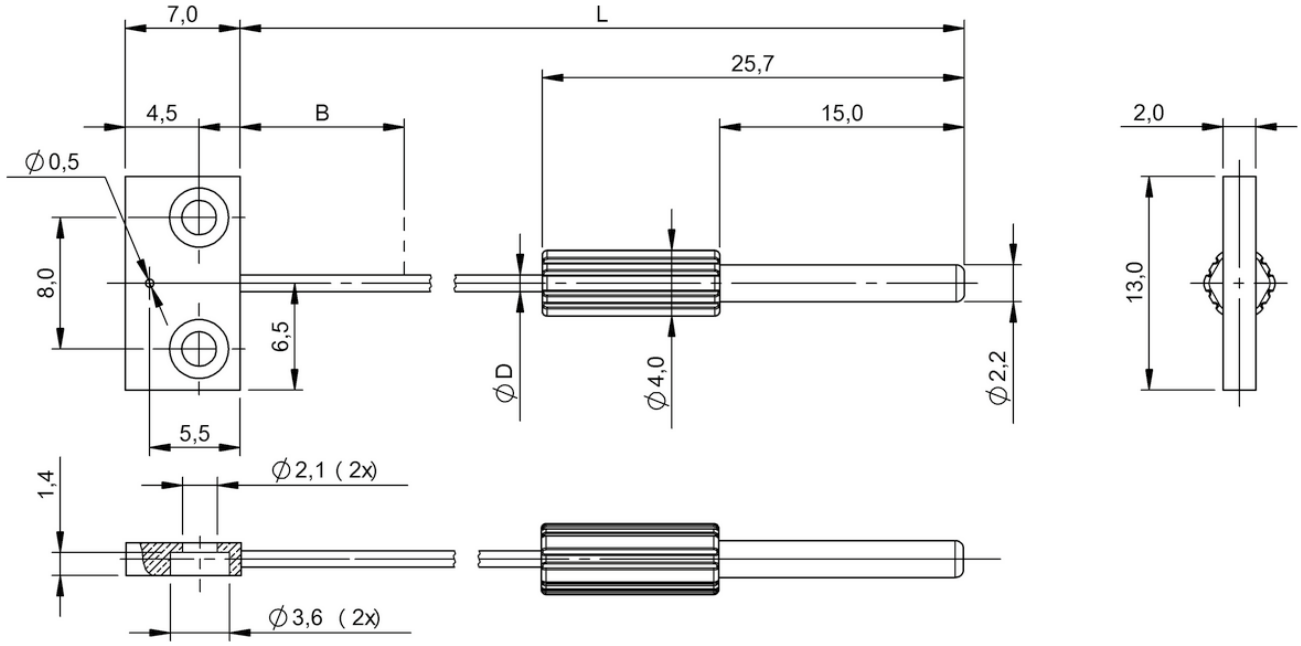

BFO00C7

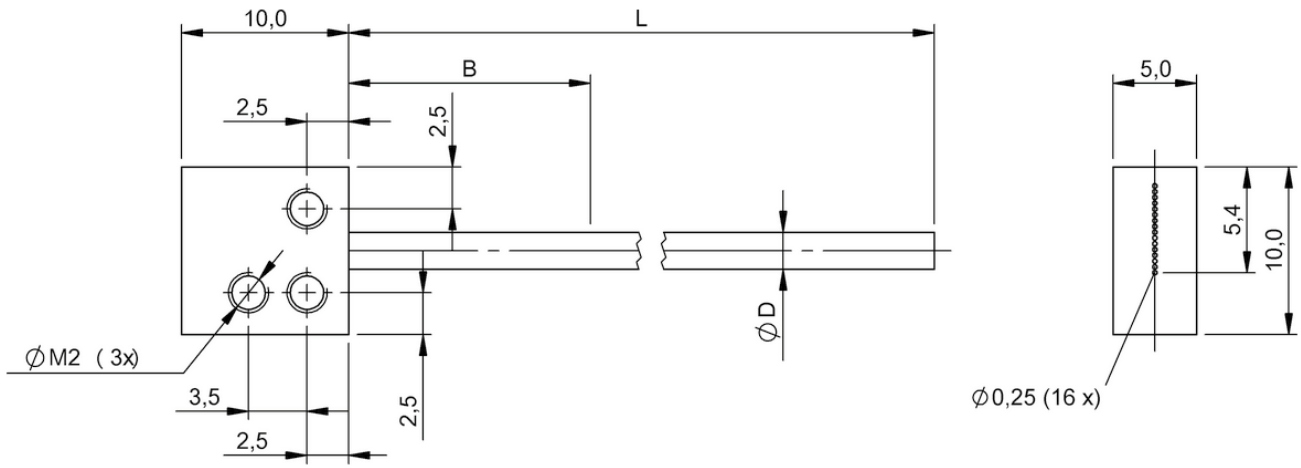

BFO00AP

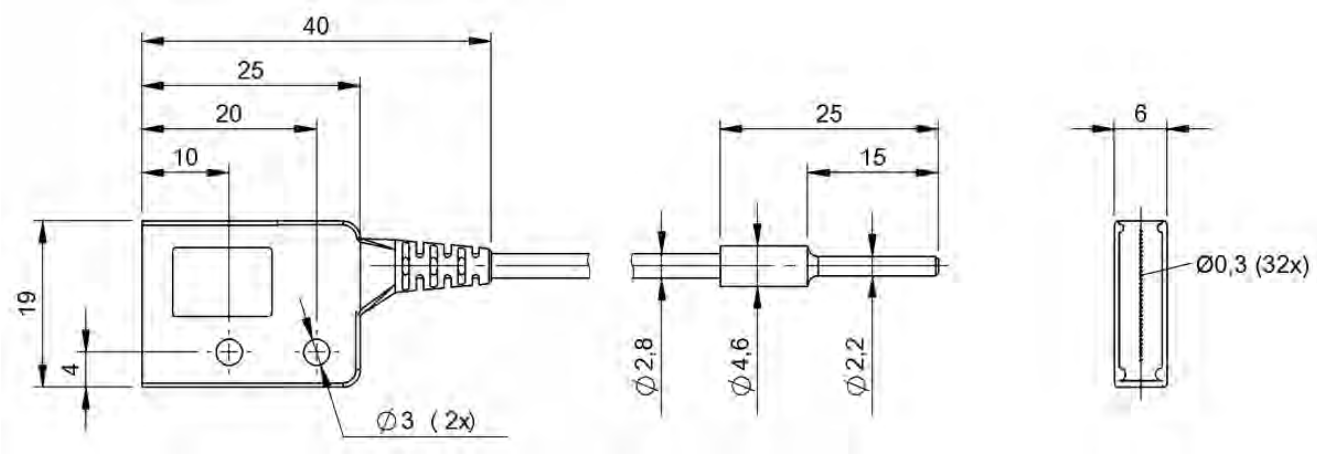

BF00067

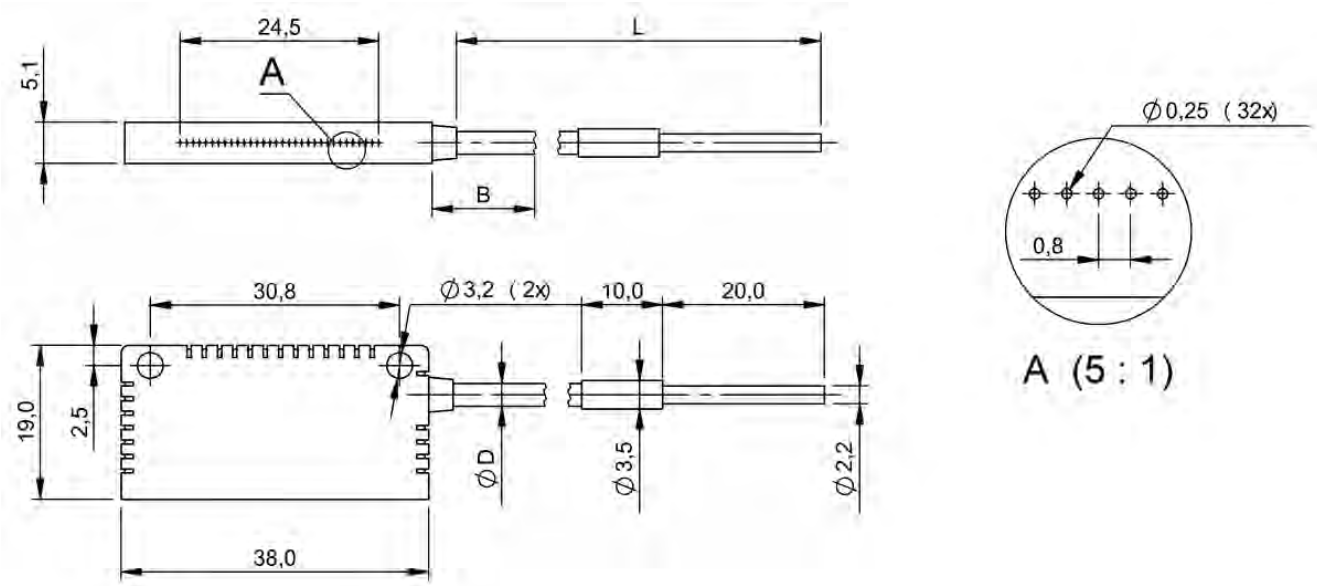

BF000C5

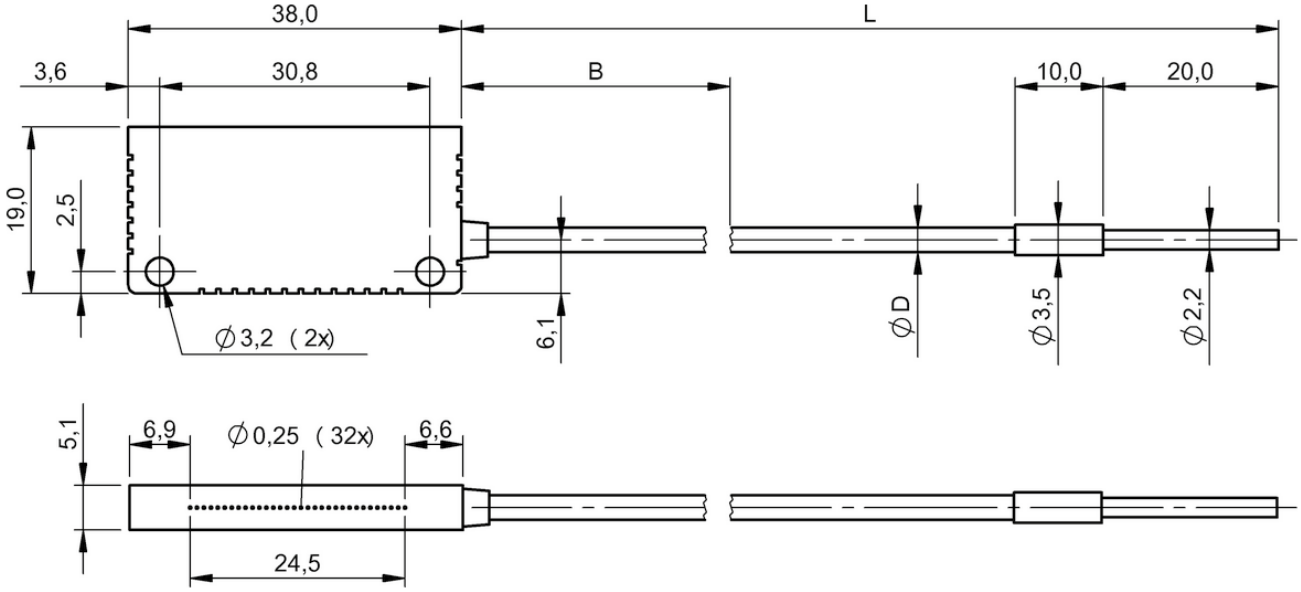

BFO0068

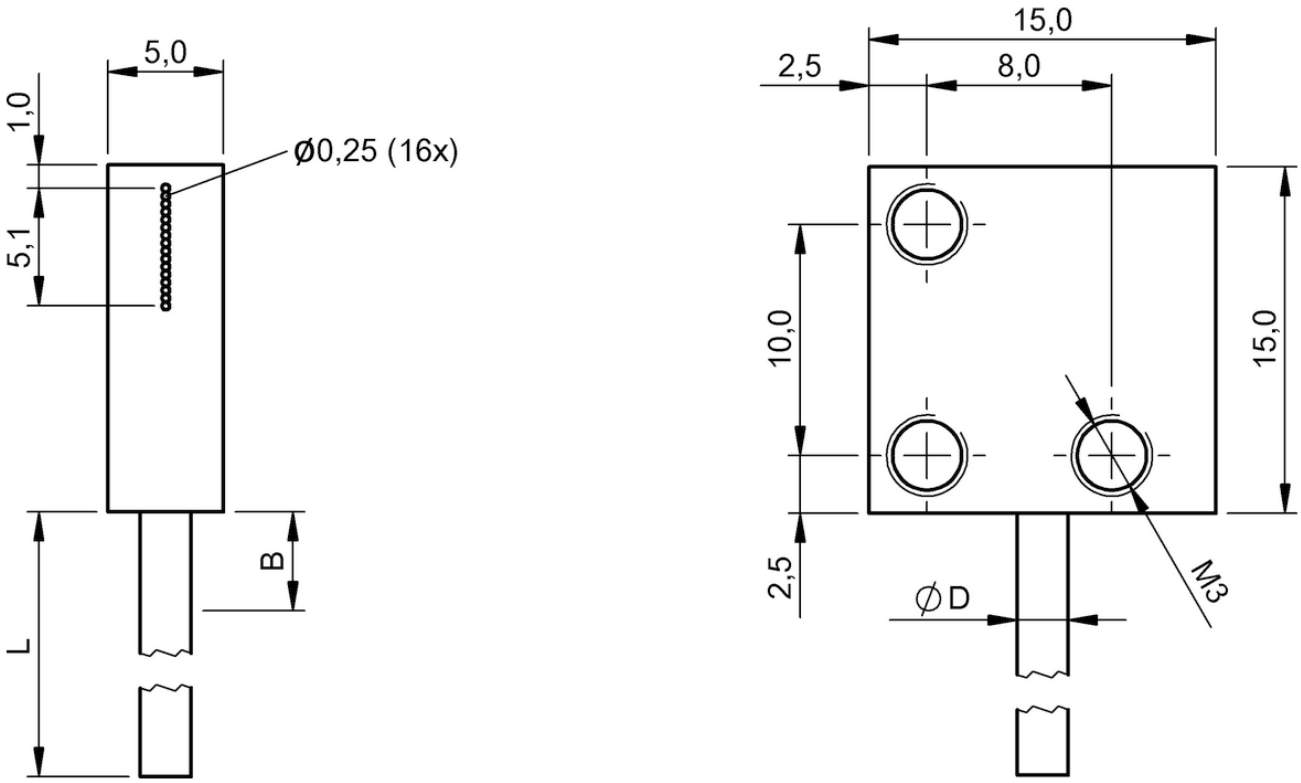

BFO005K

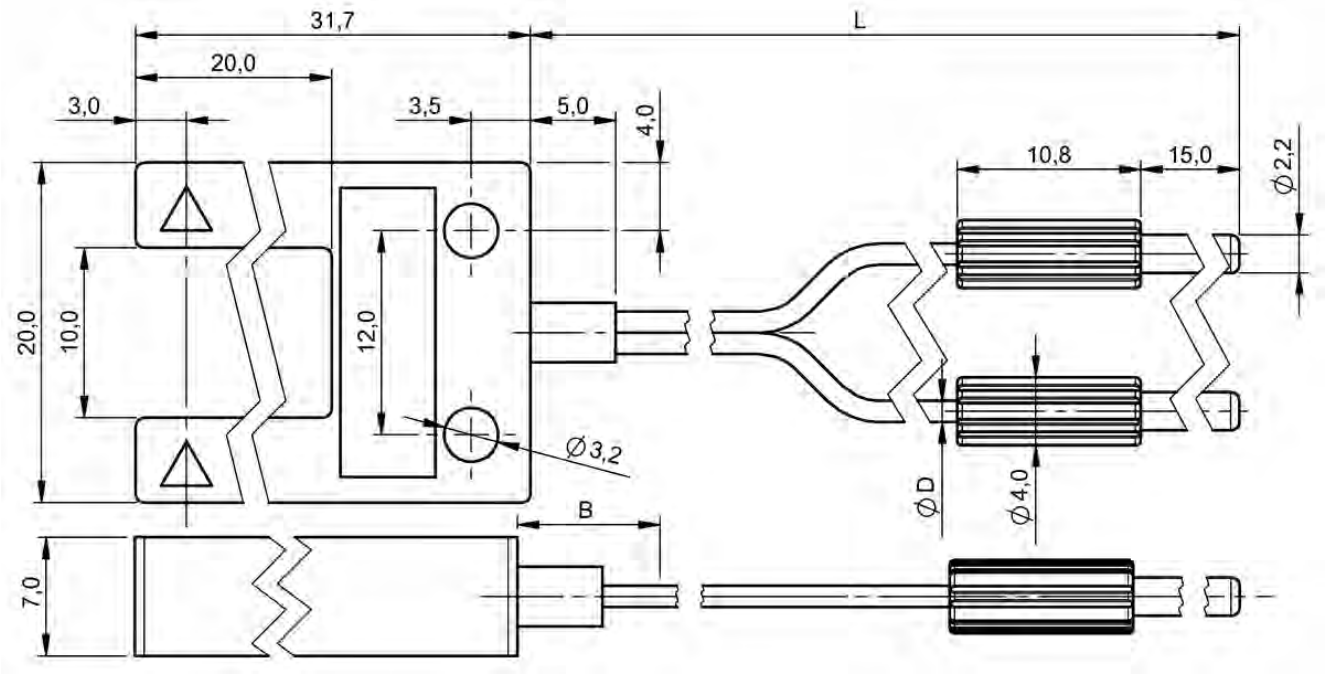

BF00059

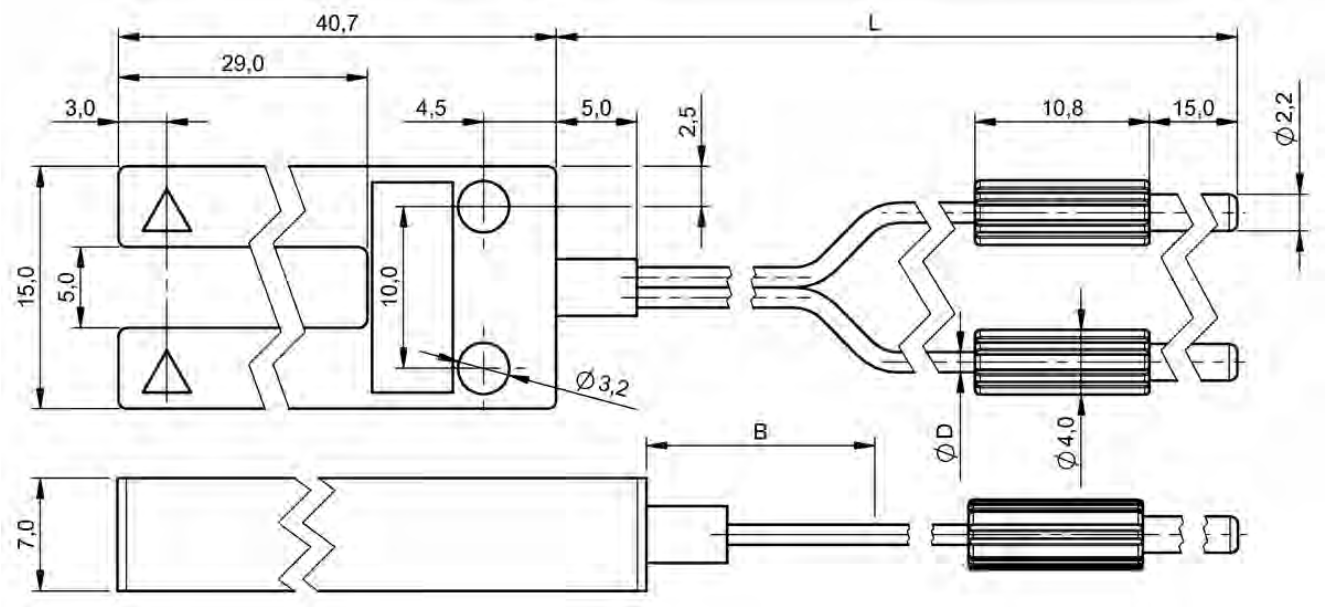

BF00058

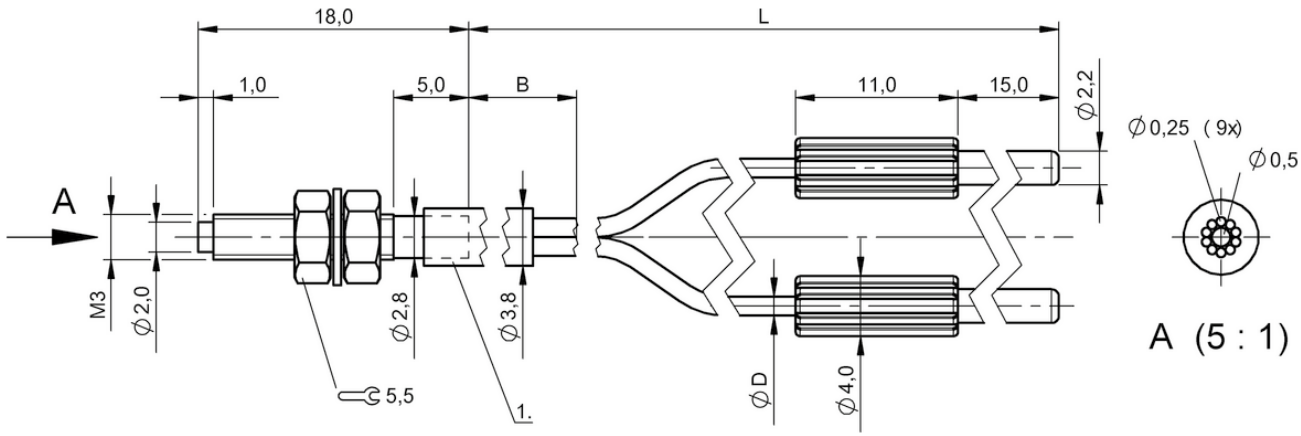

1) Protective tube

BFO005E

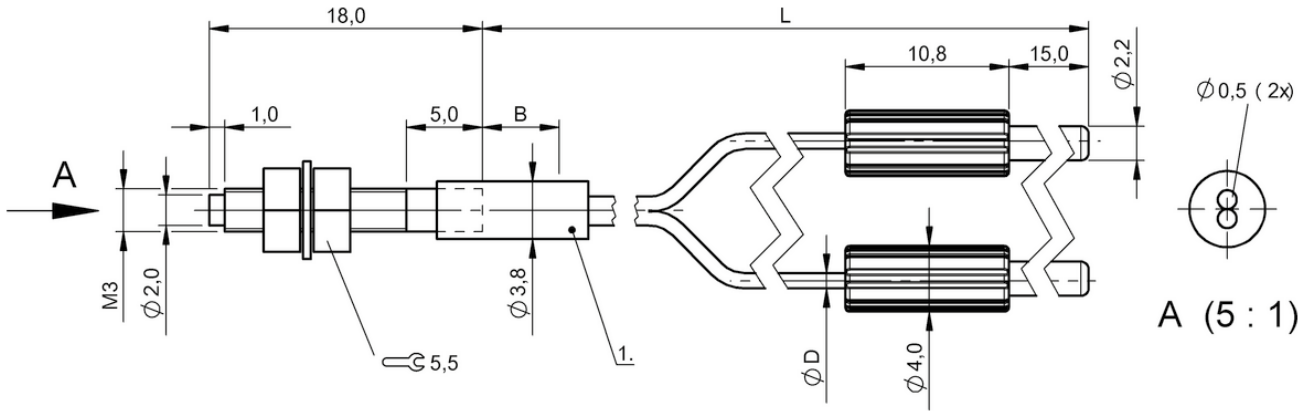

1) Protective tube

BFO0054

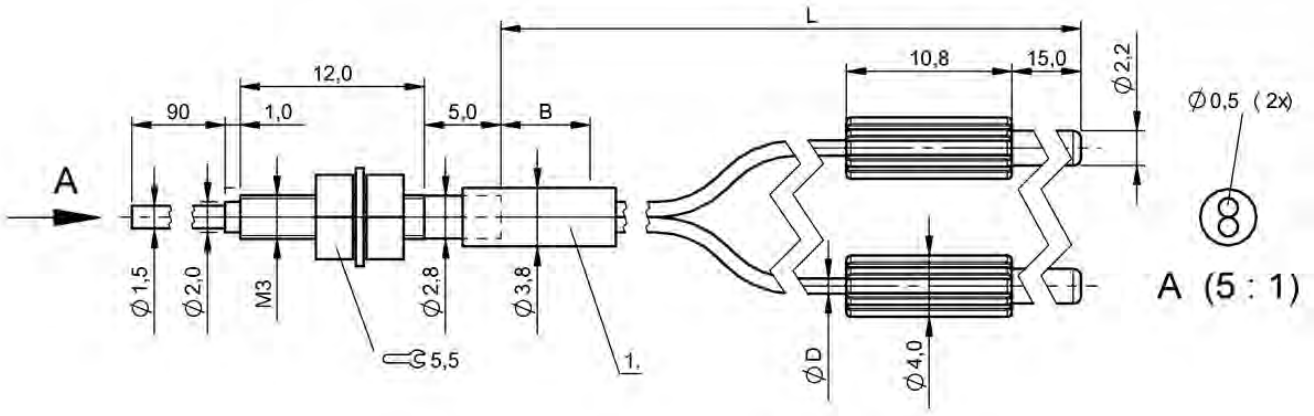

1) Protective tube

BF000C3

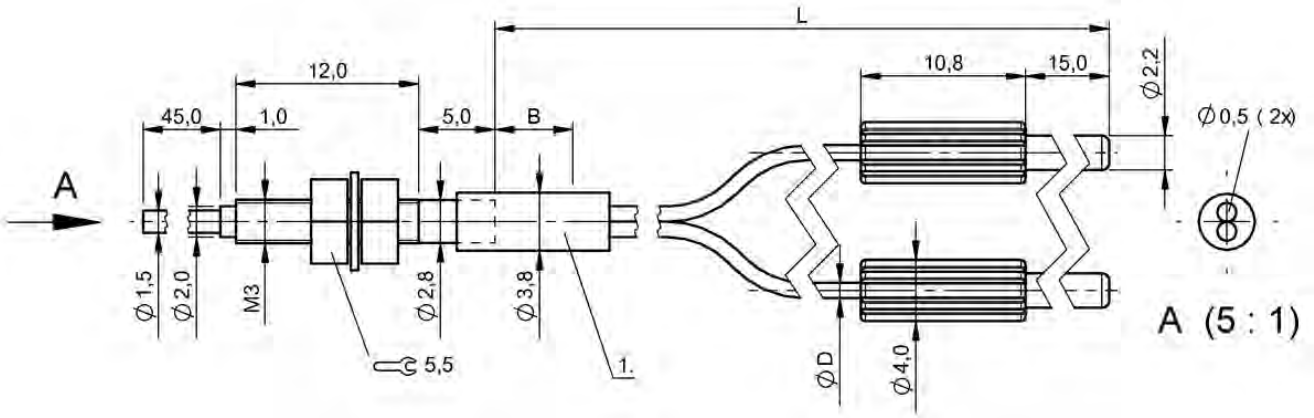

1) Protective tube

BF00052

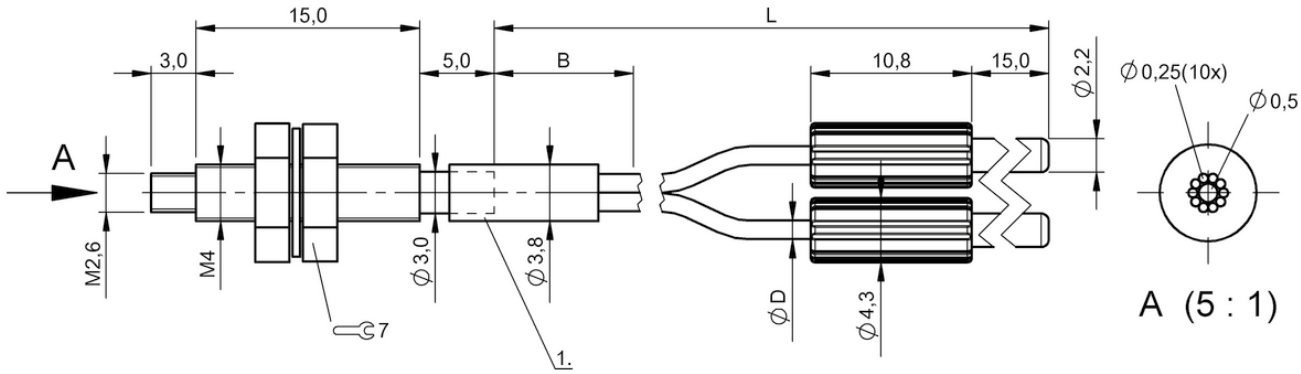

1) Protective tube

BFO005C

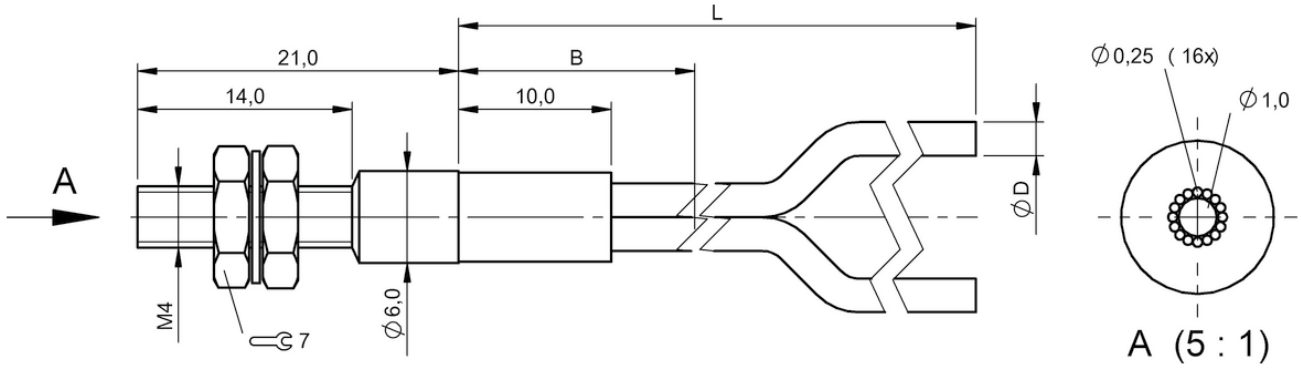

BFO0006

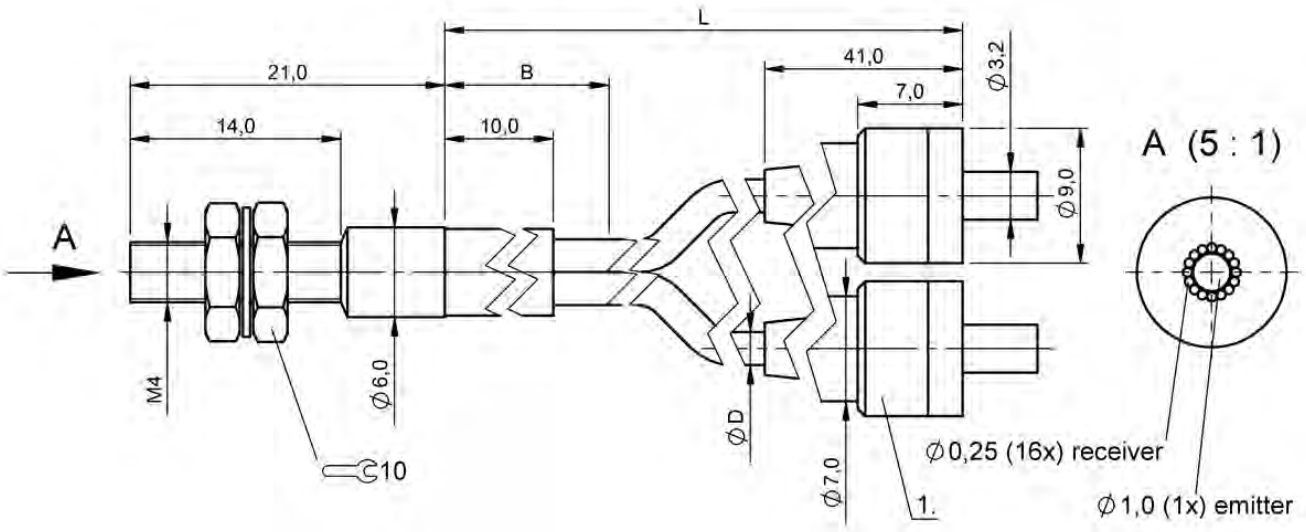

1) SMA 905

BF000C9

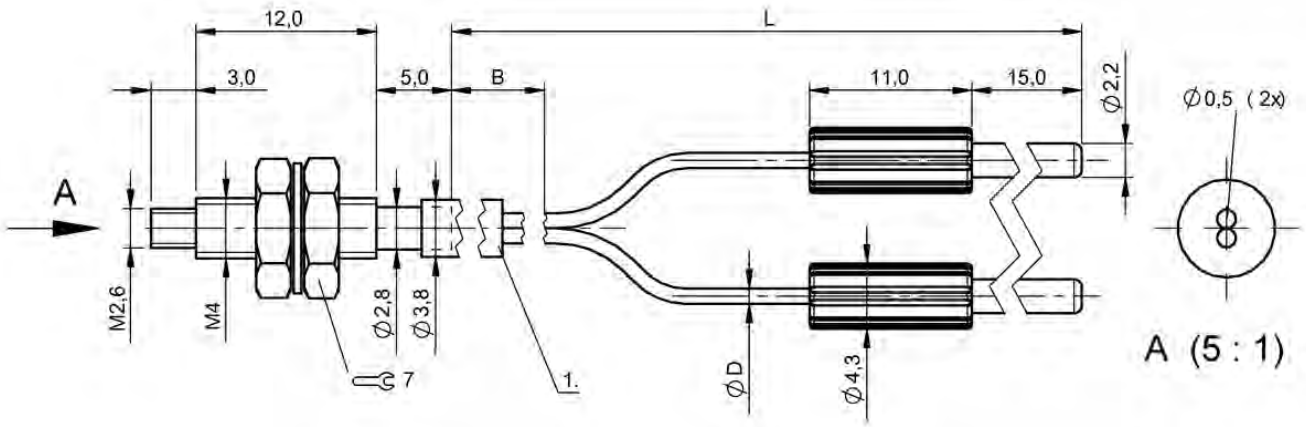

1) Protective tube

BF00055

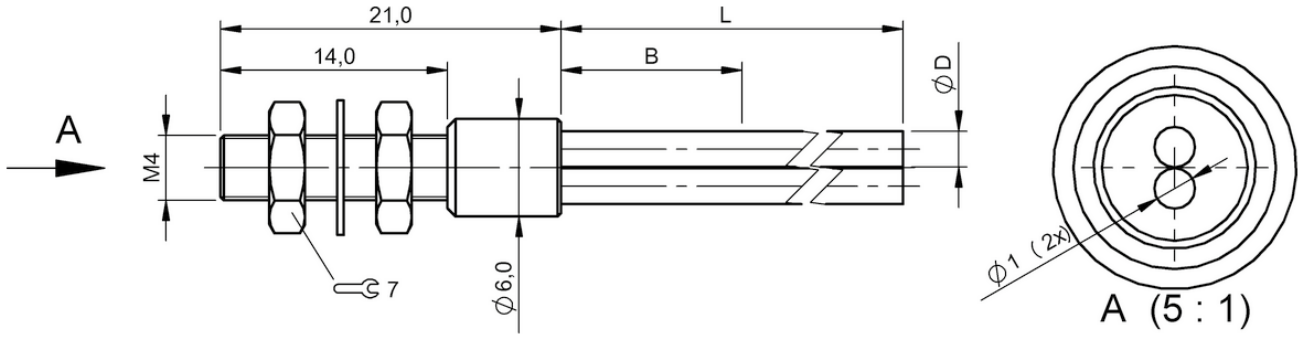

BFO0005

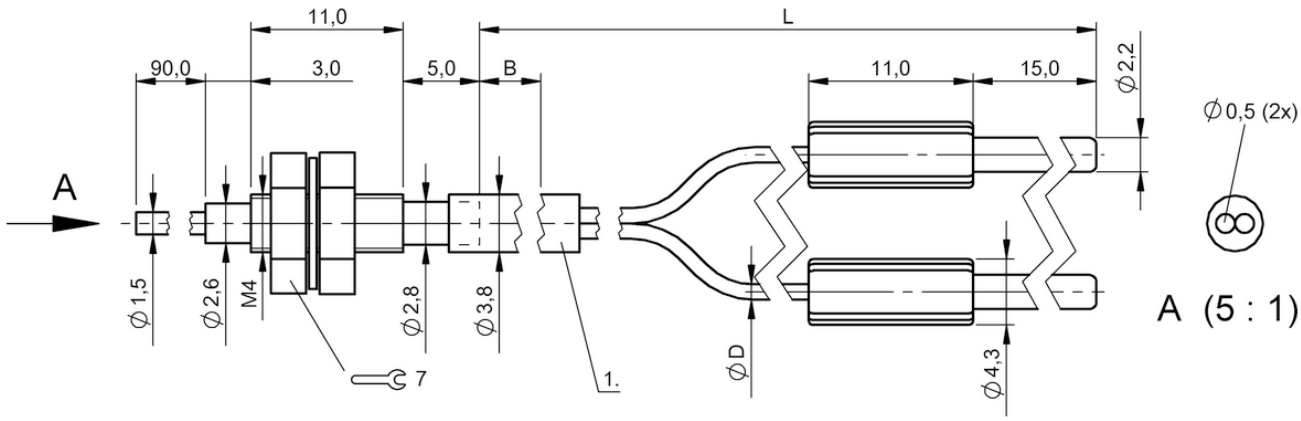

1) Protective tube

BFO0053

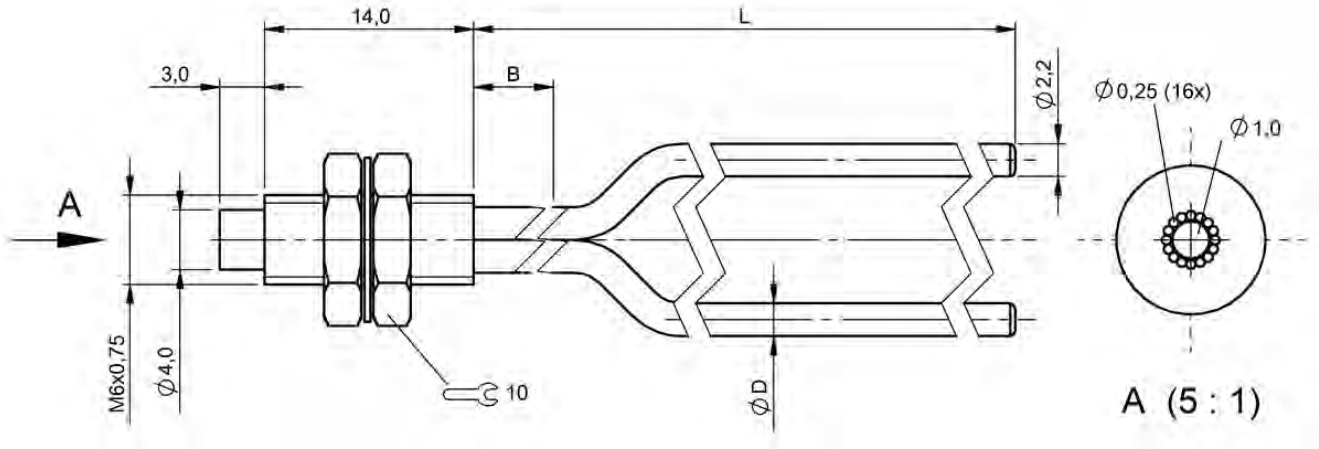

BF00066

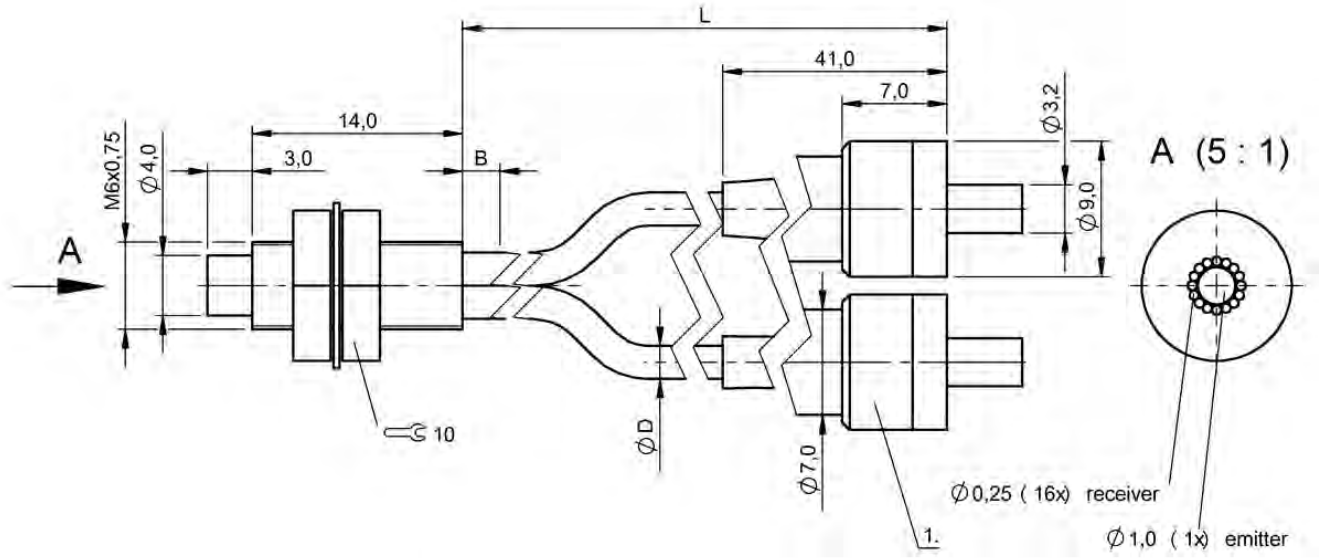

1) SMA 905

BF000H4, BF000FP, BF000C4, BF000FN

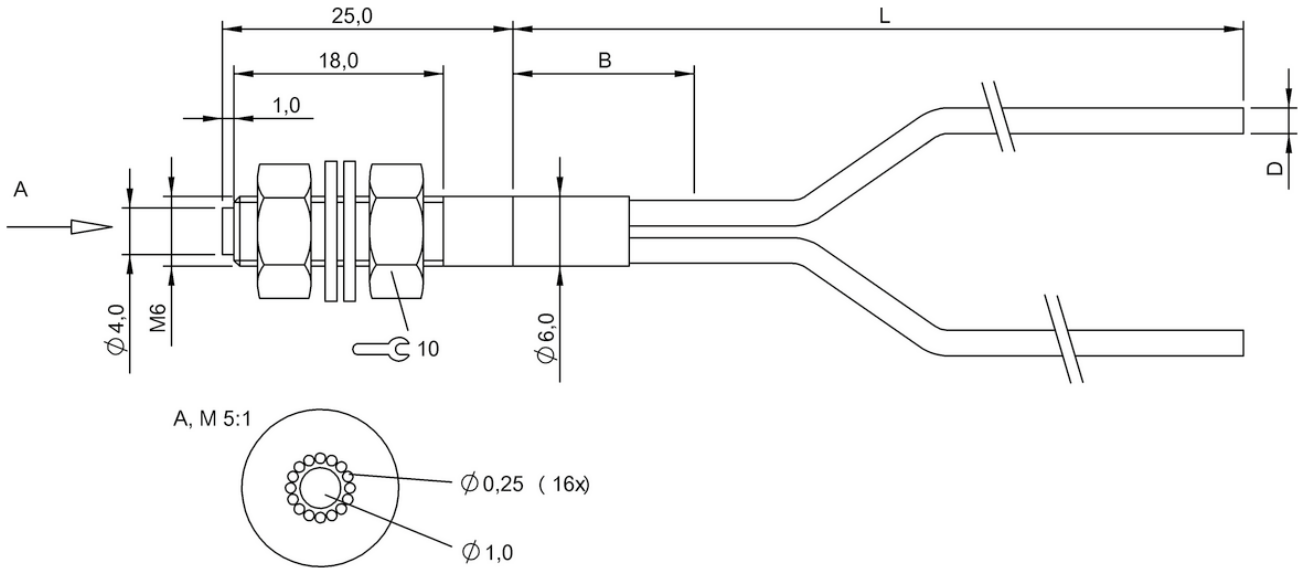

BFO0007

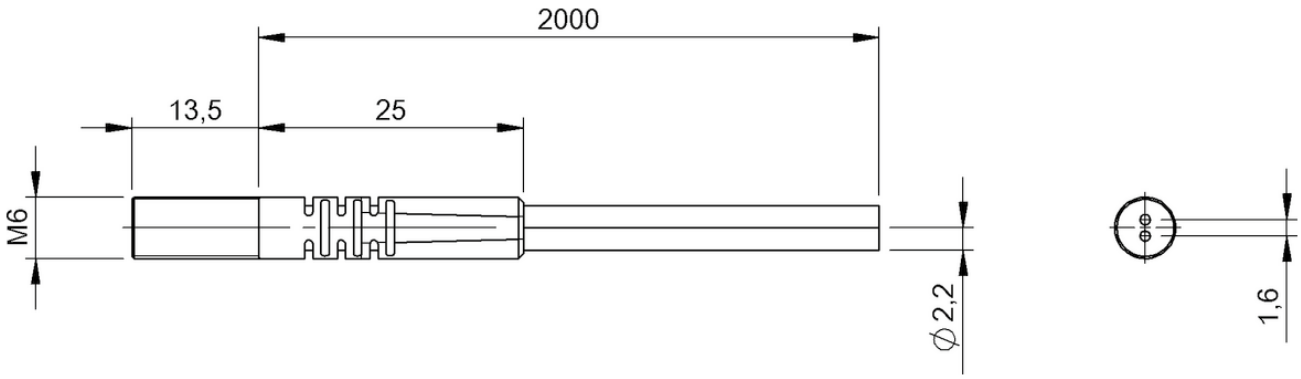

BFO00H5

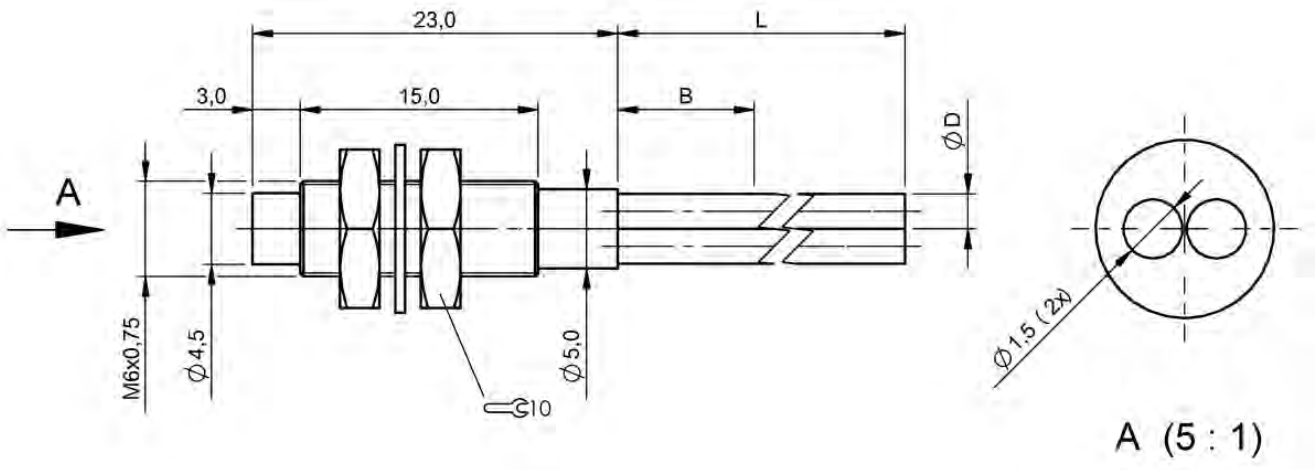

BF00064

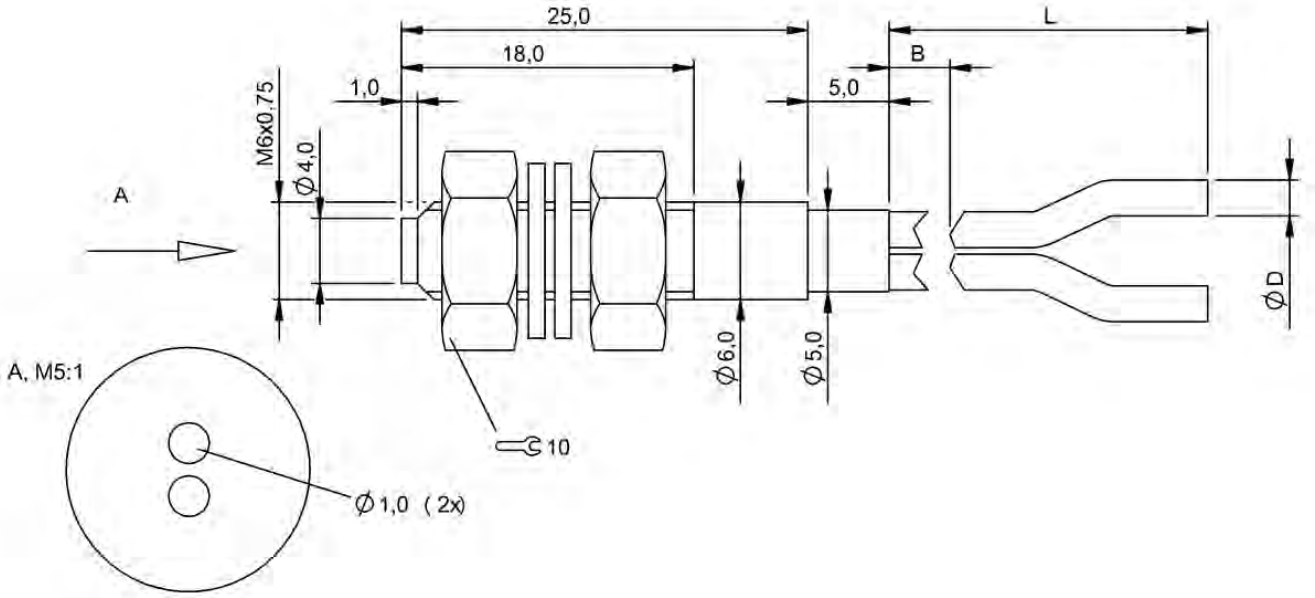

BF00003

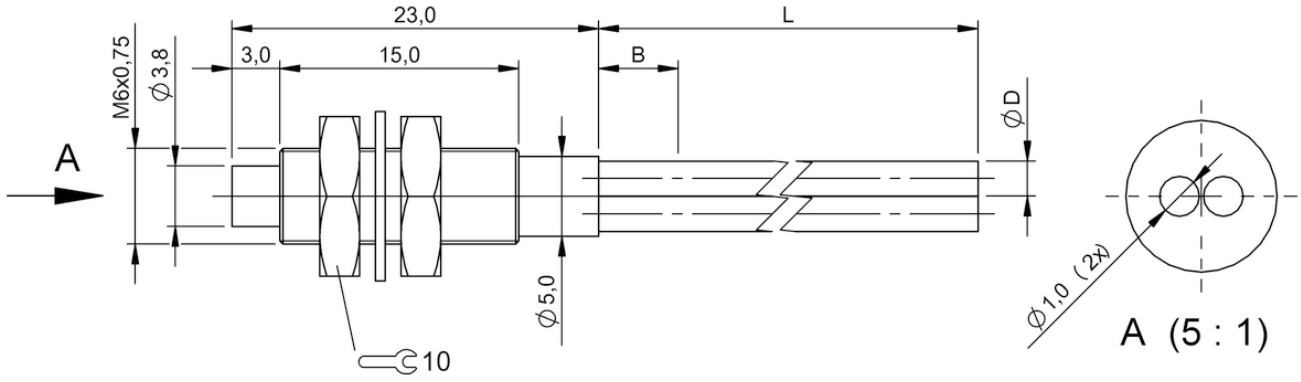

BF00063

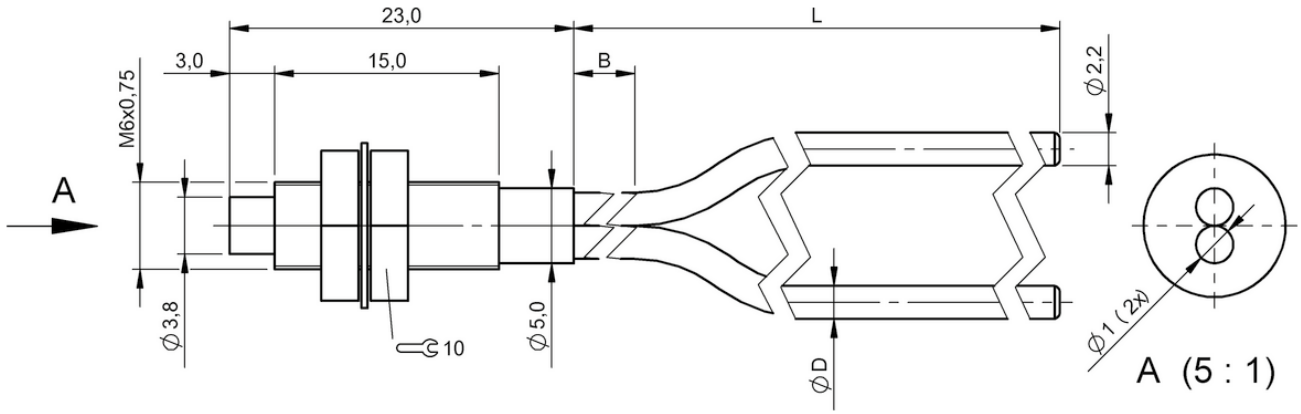

BF00065

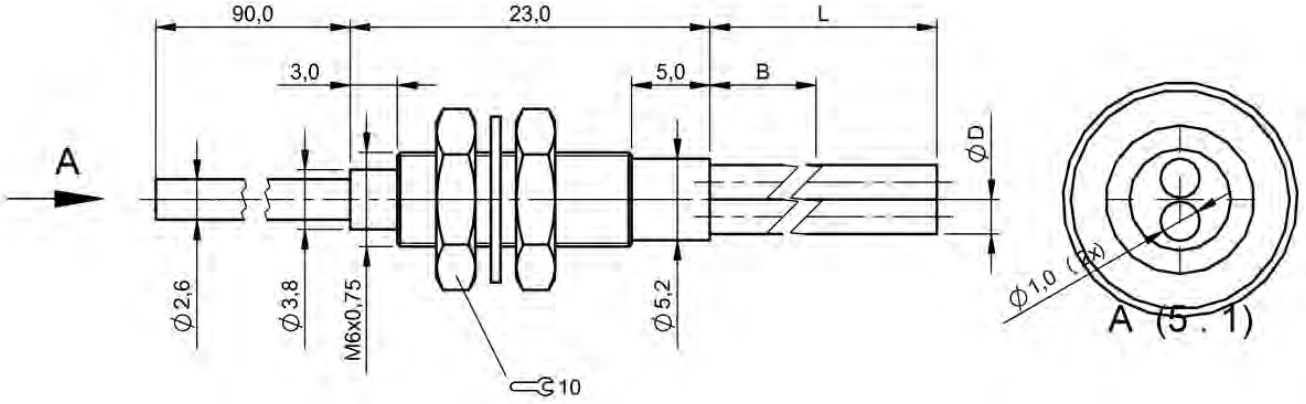

BFO0004

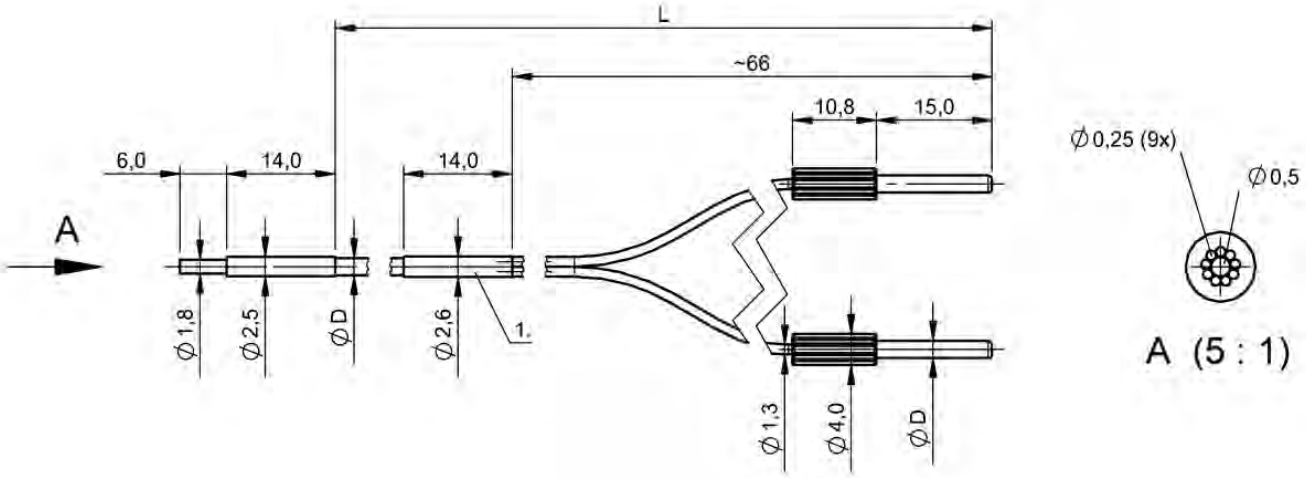

1) Protective tube

BFO00AT

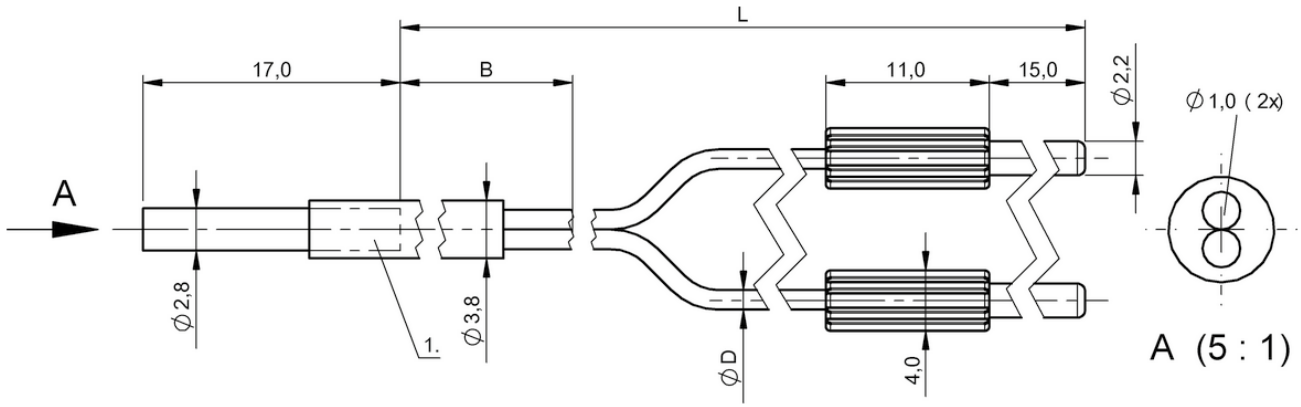

1) Protective tube

BFO005A

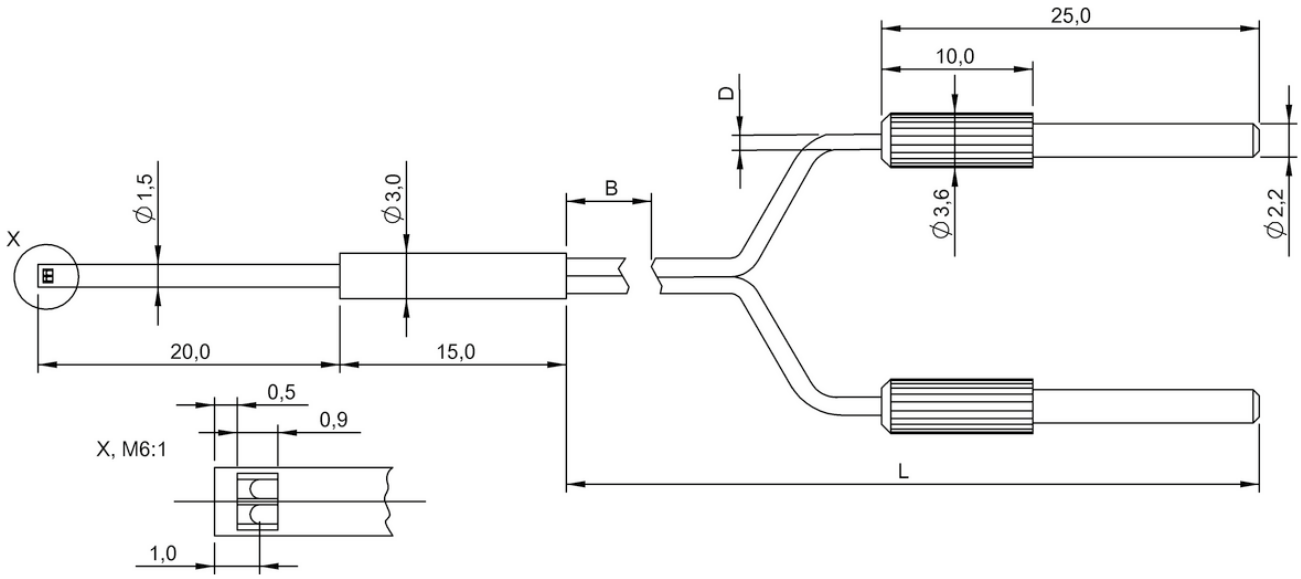

BFO0062

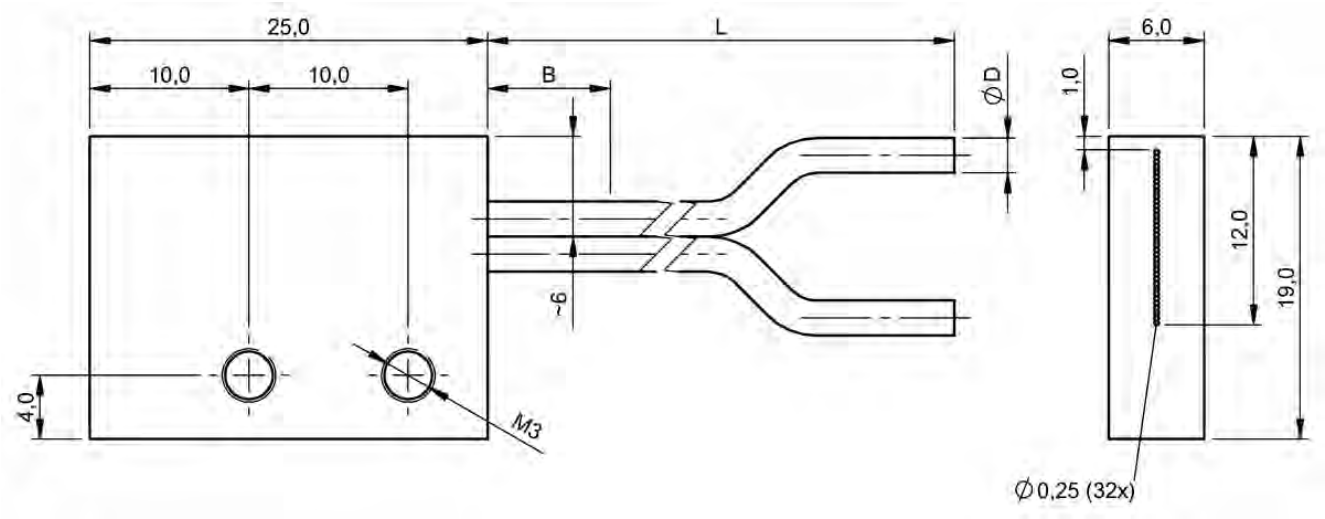

BFO005Z

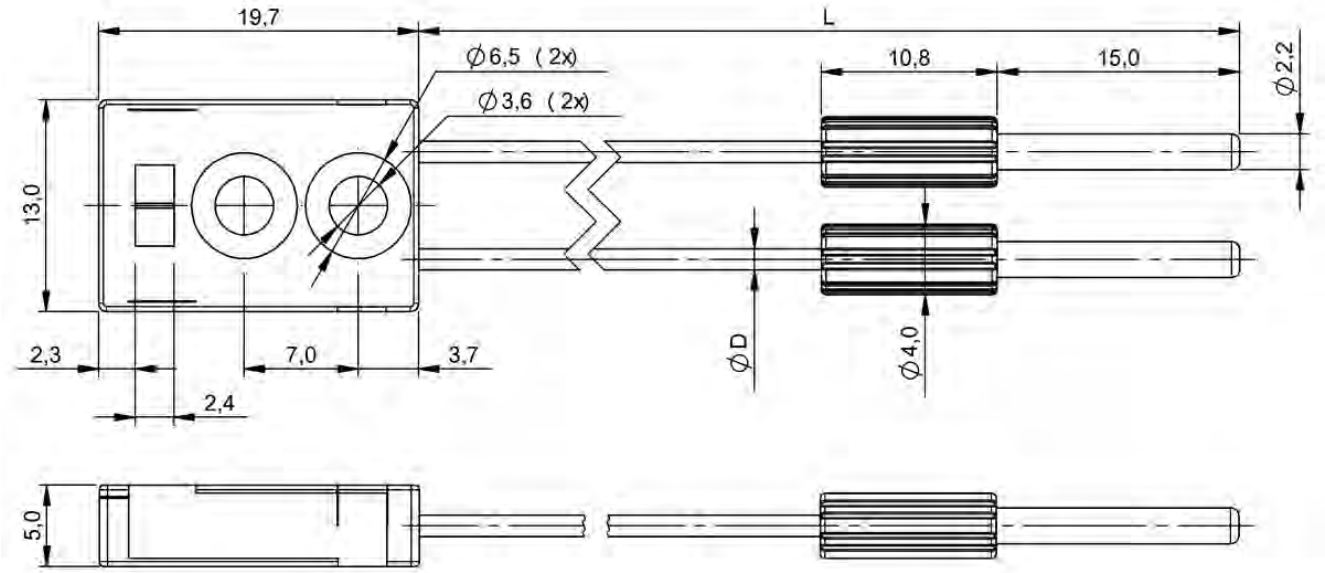

BFO00AR

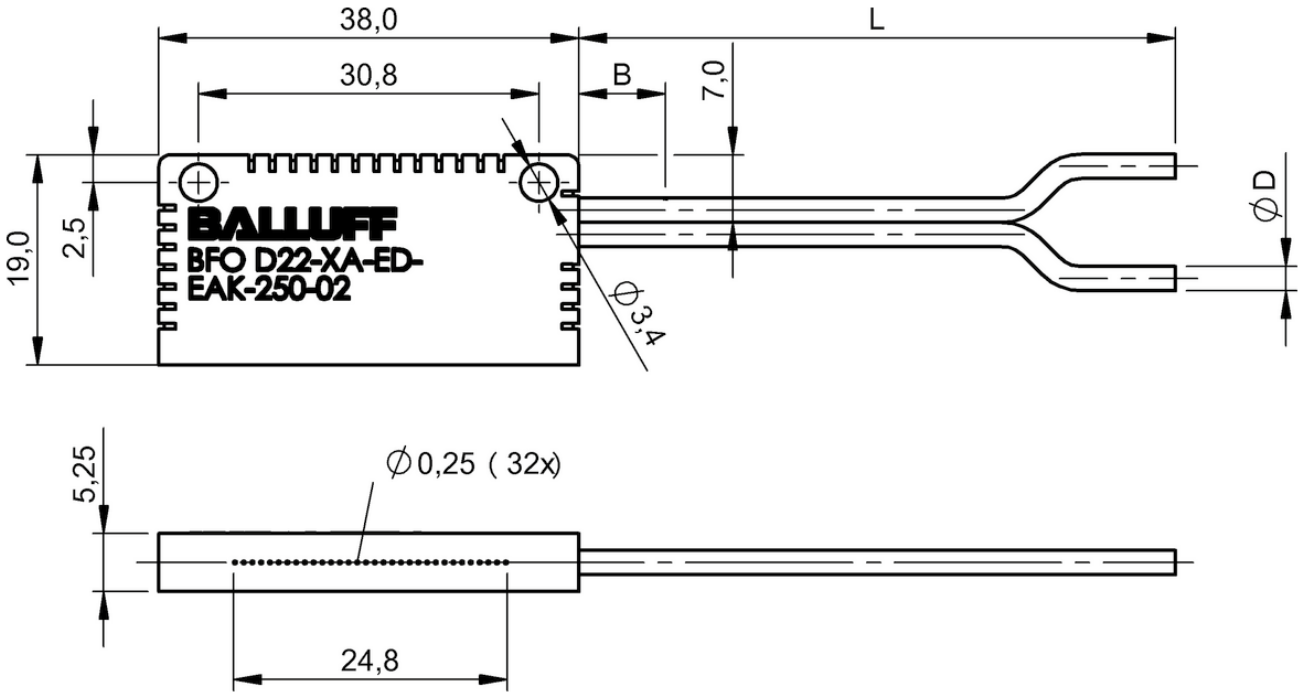
38,0
L
30,8
B
7,0
19,0
2,5
BALLUFF
BFO D22-XA-ED-
EAK-250-02
∅3,4
∅D
5,25
∅0,25 (32x)
24,8

BFO0060

	BOH00F5 BOH AI-R028-034-01-S49F	BOH00F6 BOH AI-R051-035-01-S49F	BOH00F7 BOH AI-R073-036-01-S49F
Series	—	—	—
Dimension	11 x 9 x 25 mm	11 x 9 x 46 mm	11 x 9 x 66 mm
Application	—	—	—
Interface	—	—	—
Principle of operation	Optical sensor head	Optical sensor head	Optical sensor head
Principle of optical operation	Through-beam sensor	Through-beam sensor	Through-beam sensor
Special optical feature	Light array	Light array	Light array
Beam characteristic	—	—	—
Light type	LED infrared	LED infrared	LED infrared
Light spot size	—	—	—
Active length AL 1	10 mm	30 mm	50 mm
Range	10...300 mm	10...500 mm	10...500 mm
Connection	Cable with connector, M8x1-Female, 3-pin, 1 m, PUR	Cable with connector, M8x1-Female, 3-pin, 1 m, PUR	Cable with connector, M8x1-Female, 3-pin, 1 m, PUR
Housing material	PA 6	PA 6	PA 6
Material sensing surface	PMMA	PMMA	PMMA
Approval/Conformity	—	—	—
Productview	Page 610	Page 610	Page 610

	BOH00FF BOH AI-R180-037-02-S49F	BOH00FH BOH AI-R264-038-02-S49F	BOH00FJ BOH AI-R396-039-02-S49F	BOH00FK BOH AI-R484-040-02-S49F	BOH00FL BOH AI-R704-041-02-S49F
	–	–	–	–	–
	18 x 10 x 100 mm	22 x 10 x 120 mm	22 x 11 x 180 mm	22 x 14 x 220 mm	22 x 14 x 320 mm
	–	–	–	–	–
	–	–	–	–	–
	Optical sensor head	Optical sensor head	Optical sensor head	Optical sensor head	Optical sensor head
	Through-beam sensor	Through-beam sensor	Through-beam sensor	Through-beam sensor	Through-beam sensor
	Light array	Light array	Light array	Light array	Light array
	–	–	–	–	–
	LED infrared	LED infrared	LED infrared	LED infrared	LED infrared
	–	–	–	–	–
	80 mm	100 mm	160 mm	200 mm	300 mm
	10...500 mm	10...500 mm	10...500 mm	10...500 mm	10...500 mm
	Cable with connector, M8x1-Female, 3-pin, 2 m, PUR	Cable with connector, M8x1-Female, 3-pin, 2 m, PUR	Cable with connector, M8x1-Female, 3-pin, 2 m, PUR	Cable with connector, M8x1-Female, 3-pin, 2 m, PUR	Cable with connector, M8x1-Female, 3-pin, 2 m, PUR
	Aluminum, anodized, black	Aluminum, anodized, black	Aluminum, anodized, black	Aluminum, anodized, black	Aluminum, anodized, black
	PMMA	PMMA	PMMA	PMMA	PMMA
	–	–	–	–	–
	Page 610	Page 610	Page 610	Page 610	Page 610

Do you need more details? Our Product Finder at www.balluff.com provides you with product-specific information, including technical drawings, data sheets, user guides and more for each individual product. All items are available for download.

	BOH005J BOH TI-G02-001-01-S49F	BOH000C BOH TK-G02-001-01-S49F	BOH000A BOH TR-G02-001-01-S49F	
Series	G02	G02	G02	
Dimension	Ø 2 x 8 mm	Ø 2 x 8.6 mm	Ø 2 x 8.6 mm	
Application	—	—	—	
Interface	for switching amplifier	for switching amplifier	for switching amplifier	
Principle of operation	Optical sensor head	Optical sensor head	Optical sensor head	
Principle of optical operation	Through-beam sensor	Through-beam sensor	Through-beam sensor	
Special optical feature	—	—	—	
Beam characteristic	Divergent	divergent, max. 3.5°	Divergent	
Light type	Infrared	microSPOT-LED red light	LED, red light	
Light spot size	—	Ø 10 mm at 100 mm	—	
Active length AL 1	—	—	—	
Range	0...300 mm	0...500 mm	0...300 mm	
Connection	Cable with connector, M8x1-Male, 1.00 m, PUR	Cable with connector, M8x1-Male, 1.00 m, PUR	Cable with connector, M8x1-Male, 1.00 m, PUR	
Housing material	Stainless steel	Stainless steel	Stainless steel	
Material sensing surface	Epoxy	Epoxy	Epoxy	
Approval/Conformity	CE, WEEE	CE, WEEE	CE, WEEE	
Productview	Page 611	Page 611	Page 611	

	BOH000J BOH TJ-G02-001-01-S49F	BOH000E BOH TK-M03-005-01-S49F	BOH0061 BOH TI-M03-001-01-S49F	BOH000U BOH TK-M03-001-01-S49F	BOH000T BOH TR-M03-001-01-S49F
	G02	M03	M03	M03	M03
	Ø 2 x 8.6 mm	6 x 5.5 x 7.6 mm	Ø 3 x 8 mm	Ø 3 x 8.7 mm	Ø 3 x 8.7 mm
	Water detection	—	—	—	—
	for switching amplifier	for switching amplifier	for switching amplifier	for switching amplifier	for switching amplifier
	Optical sensor head	Optical sensor head	Optical sensor head	Optical sensor head	Optical sensor head
	Through-beam sensor	Through-beam sensor	Through-beam sensor	Through-beam sensor	Through-beam sensor
	Light absorption with water	—	—	—	—
	Divergent	divergent, max. 3.5°	Divergent	divergent, max. 3.5°	Divergent
	Infrared for water detection	microSPOT-LED red light	Infrared	microSPOT-LED red light	LED, red light
	—	Ø 10 mm at 100 mm	—	Ø 10 mm at 100 mm	—
	—	—	—	—	—
	0...250 mm	0...500 mm	0...300 mm	0...500 mm	0...300 mm
	Cable with connector, M8x1-Male, 1.00 m, PUR	Cable with connector, M8x1-Male, 1.00 m, PUR	Cable with connector, M8x1-Male, 1.00 m, PUR	Cable with connector, M8x1-Male, 1.00 m, PUR	Cable with connector, M8x1-Male, 1.00 m, PUR
	Stainless steel	Stainless steel	Stainless steel	Stainless steel	Stainless steel
	PMMA	Epoxy	Epoxy	Epoxy	Epoxy
	CE, WEEE	CE, WEEE	CE, WEEE	CE, WEEE	CE, WEEE
	Page 611	Page 611	Page 611	Page 611	Page 611

	BOH00E6 BOH TK-M04-020-01-S49F	BOH00E5 BOH TR-M04-020-01-S49F	BOH0010 BOH TR-G05-005-02-S49F
Series	M04	M04	G05
Dimension	Ø 4 x 12 mm	Ø 4 x 12 mm	Ø 5 x 13 mm
Application	—	—	—
Interface	for switching amplifier	for switching amplifier	for switching amplifier
Principle of operation	Optical sensor head	Optical sensor head	Optical sensor head
Principle of optical operation	Through-beam sensor	Through-beam sensor	Through-beam sensor
Special optical feature	—	—	—
Beam characteristic	divergent, max. 2.5°	Divergent	Divergent
Light type	microSPOT-LED red light	LED, red light	LED, red light
Light spot size	Ø 8.00 mm at 100 mm	27 x 27 mm at 100 mm	—
Active length AL 1	—	—	—
Range	0...2000 mm	0...2000 mm	0...4 m
Connection	Cable with connector, M8x1-Male, 1.00 m, PUR	Cable with connector, M8x1-Male, 1.00 m, PUR	Cable with connector, M8x1-Male, 2.00 m, PUR
Housing material	Nickel-plated brass, nickel plated	Nickel-plated brass, nickel plated	Stainless steel
Material sensing surface	PMMA	PMMA	PMMA
Approval/Conformity	CE, WEEE	—	CE, WEEE
Productview	Page 611	Page 611	Page 611

	BOH000F BOH TK-M05-006-01-S49F	BOH0065 BOH TI-M05-003-01-S49F	BOH0013 BOH TK-M05-003-01-S49F	BOH000Y BOH TR-M05-003-01-S49F	BOH006H BOH TI-M06-002-01-S49F
	M5	M5	M5	M5	M6
	8.8 x 8 x 8 mm	Ø 5 x 10 mm	Ø 5 x 12.5 mm	Ø 5 x 12.5 mm	Ø 6 x 12 mm
	—	—	—	—	—
	for switching amplifier	for switching amplifier	for switching amplifier	for switching amplifier	for switching amplifier
	Optical sensor head	Optical sensor head	Optical sensor head	Optical sensor head	Optical sensor head
	Through-beam sensor	Through-beam sensor	Through-beam sensor	Through-beam sensor	Through-beam sensor
	—	—	—	—	—
	divergent, max. 2.5°	Divergent	divergent, max. 2.5°	Divergent	Divergent
	microSPOT-LED red light	Infrared	microSPOT-LED red light	LED, red light	Infrared
	Ø 8 mm at 100 mm	—	Ø 8 mm at 100 mm	—	—
	—	—	—	—	—
	0...2 m	0...1 m	0...2 m	0...1 m	0...4 m
	Cable with connector, M8x1-Male, 1.00 m, PUR	Cable with connector, M8x1-Male, 1.00 m, PUR	Cable with connector, M8x1-Male, 1.00 m, PUR	Cable with connector, M8x1-Male, 1.00 m, PUR	Cable with connector, M8x1-Male, 1.00 m, PUR
	Brass, nickel plated	Brass, nickel plated	Brass, nickel plated	Brass, nickel plated	Brass, nickel plated
	Glass	PMMA	PMMA	PMMA	PMMA
	CE, WEEE	CE, WEEE	CE, WEEE	CE, WEEE	CE, WEEE
	Page 611	Page 611	Page 611	Page 611	Page 611

Do you need more details? Our Product Finder at www.balluff.com provides you with product-specific information, including technical drawings, data sheets, user guides and more for each individual product. All items are available for download.

	BOH000K BOH TR-M06-002-02-S49F	BOH000H BOH TL-M06-007-02-S49F	BOH0012 BOH TK-M08-004-02-S49F
Series	M6	M6	M8
Dimension	Ø 6 x 13 mm	Ø 6 x 17 mm	Ø 8 x 20 mm
Application	—	—	—
Interface	for switching amplifier	for switching amplifier	for switching amplifier
Principle of operation	Optical sensor head	Optical sensor head	Optical sensor head
Principle of optical operation	Through-beam sensor	Through-beam sensor	Through-beam sensor
Special optical feature	—	—	—
Beam characteristic	Divergent	Collimated	divergent, max. 1°
Light type	LED, red light	Laser red light	microSPOT-LED red light
Light spot size	—	Ø 4.5 mm at 2 m	Ø 18 mm at 1 m
Active length AL 1	—	—	—
Range	0...4 m	0...4 m	0...4 m
Connection	Cable with connector, M8x1-Male, 2.00 m, PUR	Cable with connector, M8x1-Male, 2.00 m, PUR	Cable with connector, M8x1-Male, 2.00 m, PUR
Housing material	Brass, nickel plated	Brass, nickel plated	Brass, nickel plated
Material sensing surface	PMMA	Glass	Glass
Approval/Conformity	CE, WEEE	CE, WEEE	CE, WEEE
Productview	Page 611	Page 612	Page 612

	BOH006P BOH TI-Q06-001-01-S49F	BOH000P BOH TK-Q06-001-01-S49F	BOH000N BOH TR-Q06-001-01-S49F	BOH000R BOH TJ-Q06-001-01-S49F	BOH00EL BOH AI-R034-025-01-S49F
	Q06	Q06	Q06	Q06	—
	12 x 6 x 6 mm	12 x 6 x 6 mm	12 x 6 x 6 mm	12 x 6 x 6 mm	8 x 28 x 12 mm
	—	—	—	Water detection	—
	for switching amplifier	for switching amplifier	for switching amplifier	for switching amplifier	for switching amplifier
	Optical sensor head	Optical sensor head	Optical sensor head	Optical sensor head	Optical sensor head
	Through-beam sensor	Through-beam sensor	Through-beam sensor	Through-beam sensor	Through-beam sensor
	—	—	—	Light absorption with water	Light array
	Divergent	divergent, max. 2.5°	Divergent	Divergent	Divergent
	Infrared	microSPOT-LED red light	LED, red light	Infrared for water detection	Infrared
	—	Ø 8 mm at 100 mm	—	—	—
	—	—	—	—	18 mm
	0...1 m	0...2 m	0...1 m	0 m...500 mm	100 mm
	Cable with connector, M8x1-Male, 1.00 m, PUR	Cable with connector, M8x1-Male, 1.00 m, PUR	Cable with connector, M8x1-Male, 1.00 m, PUR	Cable with connector, M8x1-Male, 1.00 m, PUR	Cable with connector, M8x1-Male, 1 m, PUR
	Brass, nickel plated	Brass, nickel plated	Brass, nickel plated	Brass	PA 6
	PMMA	PMMA	PMMA	PMMA	PMMA
	CE, WEEE	CE, WEEE	CE, WEEE	CE, WEEE	CE, WEEE
	Page 612	Page 612	Page 612	Page 612	Page 612

	BOH001Z BOH TK-R003-007-01-S49F	BOH0020 BOH TR-R010-008-02-S49F	BOH007A BOH TJ-R010-008-01-S49F	
Series	R003	R010	R010	
Dimension	5.5 x 3 x 5.2 mm	12 x 6 x 8 mm	12 x 6 x 8 mm	
Application	—	—	Water detection	
Interface	for switching amplifier	for switching amplifier	for switching amplifier	
Principle of operation	Optical sensor head	Optical sensor head	Optical sensor head	
Principle of optical operation	Through-beam sensor	Through-beam sensor	Through-beam sensor	
Special optical feature	—	—	Light absorption with water	
Beam characteristic	divergent, max. 3.5°	Divergent	Divergent	
Light type	microSPOT-LED red light	LED, red light	Infrared	
Light spot size	Ø 10 mm at 100 mm	—	—	
Active length AL 1	—	—	—	
Range	0 m...500 mm	0...4 m	0 m...900 mm	
Connection	Cable with connector, M8x1-Male, 1.00 m, PUR	Cable with connector, M8x1-Male, 2.00 m, PUR	Cable with connector, M8x1-Male, 1.00 m, PUR	
Housing material	Brass, nickel plated	Brass, nickel plated	Brass, nickel plated	
Material sensing surface	Epoxy	PMMA	PMMA	
Approval/Conformity	CE, WEEE	CE, WEEE	CE, WEEE	
Productview	Page 612	Page 612	Page 612	

	BOH002E BOH TK-R018-002-01-S49F	BOH002C BOH TK-R018-001-01-S49F	BOH002H BOH TK-R027-004-01-S49F	BOH002F BOH TK-R027-003-01-S49F	BOH0024 BOH AR-R113-010-01-S49F
	R018	R018	R027	R027	R113
	13.5 x 3 x 13 mm	13 x 3 x 13.5 mm	18 x 4.8 x 15 mm	15 x 4.8 x 18 mm	75 x 10 x 15 mm
	—	—	—	—	—
	for switching amplifier	for switching amplifier	for switching amplifier	for switching amplifier	for analog amplifier
	Optical sensor head	Optical sensor head	Optical sensor head	Optical sensor head	Optical sensor head
	Through-beam sensor	Through-beam sensor	Through-beam sensor	Through-beam sensor	Through-beam sensor
	—	—	—	—	Light array
	divergent, max. 3.5°	divergent, max. 3.5°	divergent, max. 2.5°	divergent, max. 2.5°	—
	microSPOT-LED red light	microSPOT-LED red light	microSPOT-LED red light	microSPOT-LED red light	LED, red light
	Ø 10 mm at 100 mm	Ø 10 mm at 100 mm	Ø 8 mm at 100 mm	Ø 8 mm at 100 mm	—
	—	—	—	—	30 mm
	0 m...500 mm	0 m...500 mm	0...2 m	0...2 m	0...200 mm
	Cable with connector, M8x1-Male, 1.00 m, PUR	Cable with connector, M8x1-Male, 1.00 m, PUR	Cable with connector, M8x1-Male, 1.00 m, PUR	Cable with connector, M8x1-Male, 1.00 m, PUR	Cable with connector, M8x1-Male, 1.00 m, PUR
	Aluminum, anodized, natural	Aluminum, anodized, natural	Aluminum, anodized, natural	Aluminum, anodized, natural	Aluminum, anodized, black
	Glass	Glass	Glass	Glass	PMMA
	CE, WEEE	CE, WEEE	CE, WEEE	CE, WEEE	CE, WEEE
	Page 612	Page 612	Page 613	Page 613	Page 613

	BOH002M BOH AI-R165-011-01-S49F	BOH0002 BOH DI-G02-001-01-S49F	BOH0003 BOH DR-G02-001-01-S49F	
Series	R165	G02	G02	
Dimension	110 x 10 x 15 mm	Ø 2 x 8 mm	Ø 2 x 8 mm	
Application	—	—	—	
Interface	for analog amplifier	for switching amplifier	for switching amplifier	
Principle of operation	Optical sensor head	Optical sensor head	Optical sensor head	
Principle of optical operation	Through-beam sensor	Diffuse sensor, energetic	Diffuse sensor, energetic	
Special optical feature	Light array	—	—	
Beam characteristic	—	Divergent	Divergent	
Light type	Infrared	Infrared	LED, red light	
Light spot size	—	—	—	
Active length AL 1	80 mm	—	—	
Range	0...500 mm	0...12 mm	0...12 mm	
Connection	Cable with connector, M8x1-Male, 1.00 m, PUR	Cable with connector, M8x1-Male, 1.00 m, PUR	Cable with connector, M8x1-Male, 1.00 m, PUR	
Housing material	Aluminum, anodized, black	Stainless steel	Stainless steel	
Material sensing surface	PMMA	Epoxy	Epoxy	
Approval/Conformity	CE, WEEE	CE, WEEE	CE, WEEE	
Productview	Page 613	Page 613	Page 613	

	BOH0004 BOH DI-M03-001-01-S49F	BOH0009 BOH DR-M03-001-01-S49F	BOH003C BOH DI-G05-002-01-S49F	BOH0006 BOH DK-G05-002-01-S49F	BOH0005 BOH DR-G05-002-01-S49F
	M03	M03	G05	G05	G05
	Ø 3 x 8 mm	Ø 3 x 8 mm	Ø 5 x 12 mm	Ø 5 x 12 mm	Ø 5 x 12 mm
	—	—	—	—	—
	for switching amplifier	for switching amplifier	for switching amplifier	for switching amplifier	for switching amplifier
	Optical sensor head	Optical sensor head	Optical sensor head	Optical sensor head	Optical sensor head
	Diffuse sensor, energetic	Diffuse sensor, energetic	Diffuse sensor, energetic	Diffuse sensor, energetic	Diffuse sensor, energetic
	—	—	—	—	—
	Divergent	Divergent	Divergent	divergent, max. 3.5°	Divergent
	Infrared	LED, red light	Infrared	microSPOT-LED red light	LED, red light
	—	—	—	Ø 5 mm at 50 mm	Ø 14 mm at 50 mm
	—	—	—	—	—
	0...12 mm	0...12 mm	0...60 mm	0...60 mm	0...60 mm
	Cable with connector, M8x1-Male, 1.00 m, PUR	Cable with connector, M8x1-Male, 1.00 m, PUR	Cable with connector, M8x1-Male, 1.00 m, PUR	Cable with connector, M8x1-Male, 1.00 m, PUR	Cable with connector, M8x1-Male, 1.00 m, PUR
	Stainless steel	Stainless steel	Stainless steel	Stainless steel	Stainless steel
	Epoxy	Epoxy	PMMA	PMMA	PMMA
	CE, WEEE	CE, WEEE	CE, WEEE	CE, WEEE	CE, WEEE
	Page 613	Page 613	Page 613	Page 613	Page 613

Do you need more details? Our Product Finder at www.balluff.com provides you with product-specific information, including technical drawings, data sheets, user guides and more for each individual product. All items are available for download.

	BOH003M BOH DI-M06-002-01-S49F	BOH0008 BOH DK-M06-002-01-S49F	BOH0007 BOH DR-M06-002-01-S49F
Series	M6	M6	M6
Dimension	Ø 6 x 12 mm	Ø 6 x 12 mm	Ø 6 x 12 mm
Application	—	—	—
Interface	for switching amplifier	for switching amplifier	for switching amplifier
Principle of operation	Optical sensor head	Optical sensor head	Optical sensor head
Principle of optical operation	Diffuse sensor, energetic	Diffuse sensor, energetic	Diffuse sensor, energetic
Special optical feature	—	—	—
Beam characteristic	Divergent	divergent, max. 3.5°	Divergent
Light type	Infrared	microSPOT-LED red light	LED, red light
Light spot size	—	Ø 5 mm at 50 mm	Ø 14 mm at 50 mm
Active length AL 1	—	—	—
Range	0...60 mm	0...60 mm	0...60 mm
Connection	Cable with connector, M8x1-Male, 1.00 m, PUR	Cable with connector, M8x1-Male, 1.00 m, PUR	Cable with connector, M8x1-Male, 1.00 m, PUR
Housing material	Brass, nickel plated	Brass, nickel plated	Brass, nickel plated
Material sensing surface	PMMA	PMMA	PMMA
Approval/Conformity	CE, WEEE	CE, WEEE	CE, WEEE
Productview	Page 613	Page 613	Page 613

	BOH003W BOH DI-Q06-001-01-S49F	BOH000M BOH DK-Q06-001-01-S49F	BOH000L BOH DR-Q06-001-01-S49F	BOH002K BOH DK-R002-006-01-S49F	BOH0028 BOH DK-R018-002-01-S49F
	Q06	Q06	Q06	R002	R018
	12 x 6 x 6 mm	12 x 6 x 6 mm	12 x 6 x 6 mm	8 x 3 x 5.9 mm	13.5 x 3 x 13 mm
	—	—	—	—	—
	for switching amplifier	for switching amplifier	for switching amplifier	for switching amplifier	for switching amplifier
	Optical sensor head	Optical sensor head	Optical sensor head	Optical sensor head	Optical sensor head
	Diffuse sensor, energetic	Diffuse sensor, energetic	Diffuse sensor, energetic	Diffuse sensor, energetic	Diffuse sensor, energetic
	—	—	—	—	—
	Divergent	divergent, max. 3.5°	Divergent	divergent, max. 3.5°	divergent, max. 3.5°
	Infrared	microSPOT-LED red light	LED, red light	microSPOT-LED red light	microSPOT-LED red light
	—	Ø 4 mm at 50 mm	Ø 11 mm at 50 mm	Ø 5 mm at 50 mm	Ø 5 mm at 50 mm
	—	—	—	—	—
	0...60 mm	0...60 mm	0...60 mm	0...70 mm	3.5...60 mm
	Cable with connector, M8x1-Male, 1.00 m, PUR	Cable with connector, M8x1-Male, 1.00 m, PUR	Cable with connector, M8x1-Male, 1.00 m, PUR	Cable with connector, M8x1-Male, 1.00 m, PUR	Cable with connector, M8x1-Male, 1.00 m, PUR
	Brass, nickel plated	Brass, nickel plated	Brass, nickel plated	Brass	Aluminum, anodized, natural
	PMMA	PMMA	PMMA	Epoxy	Glass
	CE, WEEE	CE, WEEE	CE, WEEE	CE, WEEE	CE, WEEE
	Page 614	Page 614	Page 614	Page 614	Page 614

Do you need more details? Our Product Finder at www.balluff.com provides you with product-specific information, including technical drawings, data sheets, user guides and more for each individual product. All items are available for download.

	BOH0027 BOH DK-R018-001-01-S49F	BOH002A BOH DK-R027-004-01-S49F	BOH0029 BOH DK-R027-003-01-S49F	
Series	R018	R027	R027	
Dimension	13 x 3 x 13.5 mm	18 x 4.8 x 15 mm	15 x 4.8 x 18 mm	
Application	—	—	—	
Interface	for switching amplifier	for switching amplifier	for switching amplifier	
Principle of operation	Optical sensor head	Optical sensor head	Optical sensor head	
Principle of optical operation	Diffuse sensor, energetic	Diffuse sensor, energetic	Diffuse sensor, energetic	
Special optical feature	—	—	—	
Beam characteristic	divergent, max. 3.5°	divergent, max. 2.5°	divergent, max. 2.5°	
Light type	microSPOT-LED red light	microSPOT-LED red light	microSPOT-LED red light	
Light spot size	Ø 5 mm at 50 mm	Ø 8 mm at 100 mm	Ø 8 mm at 100 mm	
Active length AL 1	—	—	—	
Range	3.5...60 mm	3.5...100 mm	3.5...100 mm	
Connection	Cable with connector, M8x1-Male, 1.00 m, PUR	Cable with connector, M8x1-Male, 1.00 m, PUR	Cable with connector, M8x1-Male, 1.00 m, PUR	
Housing material	Aluminum, anodized, natural	Aluminum, anodized, natural	Aluminum, anodized, natural	
Material sensing surface	Glass	Glass	Glass	
Approval/Conformity	CE, WEEE	CE, WEEE	CE, WEEE	
Productview	Page 614	Page 614	Page 614	

BOH002L BOH FK-Z001-001-01-S49F	BOH001M BOH AR-F40-001-01-S49F	BOH001N BOH AR-F40-002-01-S49F	BOH001P BOH AR-F80-003-01-S49F	BOH001R BOH TR-T16-001-01-S49F
Z001	F40	F40	F80	T16
16 x 4 x 8.5 mm	60 x 10 x 60 mm	67 x 10 x 75 mm	107 x 10 x 75 mm	34 x 10 x 10 mm
—	—	—	—	Tube sensor, Liquid sensing
for switching amplifier	for analog amplifier	for analog amplifier	for analog amplifier	for switching amplifier
Optical sensor head	Optical sensor head	Optical sensor head	Optical sensor head	Optical sensor head
Diffuse sensor, energetic	Fork sensor	Fork sensor	Fork sensor	Fork sensor
Fixed background sup-pression	Light array	Light array	Light array	Diffraction caused by liquid
divergent, max. 3.5°	—	—	—	—
microSPOT-LED red light	LED, red light	LED, red light	LED, red light	LED, red light
Ø 1.8 mm at 7.5 mm	—	—	—	—
—	8 mm	30 mm	30 mm	—
3...15 mm	—	—	—	—
Cable with connector, M8x1-Male, 1.00 m, PUR	Cable with connector, M8x1-Male, 1.00 m, PUR	Cable with connector, M8x1-Male, 1.00 m, PUR	Cable with connector, M8x1-Male, 1.00 m, PUR	Cable with connector, M8x1-Male, 1.00 m, PUR
Brass, nickel plated	Aluminum, anodized, black	Aluminum, anodized, black	Aluminum, anodized, black	Aluminum, anodized, black
Epoxy	Epoxy	PMMA	PMMA	Epoxy
CE, WEEE	CE, WEEE	CE, WEEE	CE, WEEE	CE, WEEE
Page 614	Page 614	Page 615	Page 615	Page 615

	BOH001Y BOH TR-T32-001-01-S49F	BOH001U BOH TJ-T32-001-01-S49F	BOH0019 BOH TR-T48-001-01-S49F
Series	T32	T32	T48
Dimension	34 x 10 x 10 mm	34 x 10 x 10 mm	34 x 10 x 10 mm
Application	Tube sensor, Liquid sensing	Tube sensor, Water detection	Tube sensor, Liquid sensing
Interface	for switching amplifier	for switching amplifier	for switching amplifier
Principle of operation	Optical sensor head	Optical sensor head	Optical sensor head
Principle of optical operation	Fork sensor	Fork sensor	Fork sensor
Special optical feature	Diffraction caused by liquid	Light absorption with water	Diffraction caused by liquid
Beam characteristic	—	—	—
Light type	LED, red light	Infrared for water detection	LED, red light
Light spot size	—	—	—
Active length AL 1	—	—	—
Range	—	—	—
Connection	Cable with connector, M8x1-Male, 1.00 m, PUR	Cable with connector, M8x1-Male, 1.0 m, PUR	Cable with connector, M8x1-Male, 1.00 m, PUR
Housing material	Aluminum, anodized, black	Aluminum, anodized, black	Aluminum, anodized, black
Material sensing surface	Epoxy	Epoxy	Epoxy
Approval/Conformity	CE, WEEE	CE, WEEE	CE, WEEE
Productview	Page 615	Page 615	Page 615

	BOH0015 BOH TJ-T48-001-01-S49F	BOH001A BOH TR-T64-001-01-S49F	BOH0016 BOH TJ-T64-001-01-S49F		
	T48	T64	T64		
	34 x 10 x 10 mm	34 x 10 x 10 mm	34 x 10 x 10 mm		
	Tube sensor, Water detection	Tube sensor, Liquid sensing	Tube sensor, Water detection		
	for switching amplifier	for switching amplifier	for switching amplifier		
	Optical sensor head	Optical sensor head	Optical sensor head		
	Fork sensor	Fork sensor	Fork sensor		
	Light absorption with water	Diffraction caused by liquid	Light absorption with water		
	—	—	—		
	Infrared for water detection	LED, red light	Infrared for water detection		
	—	—	—		
	—	—	—		
	—	—	—		
	Cable with connector, M8x1-Male, 0.20 m, PUR	Cable with connector, M8x1-Male, 1.00 m, PUR	Cable with connector, M8x1-Male, 0.20 m, PUR		
	Aluminum, anodized, black	Aluminum, anodized, black	Aluminum, anodized, black		
	Epoxy	Epoxy	Epoxy		
	CE, WEEE	CE, WEEE	CE, WEEE		
	Page 615	Page 615	Page 615		

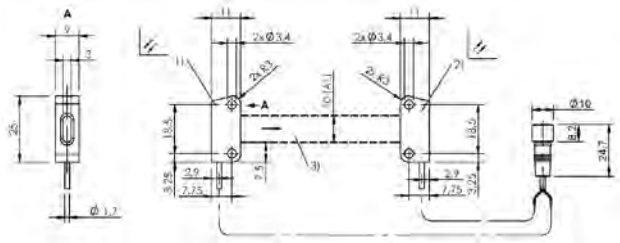

1) Emitter, 2) Receiver, 3) Light array

BOH00F5

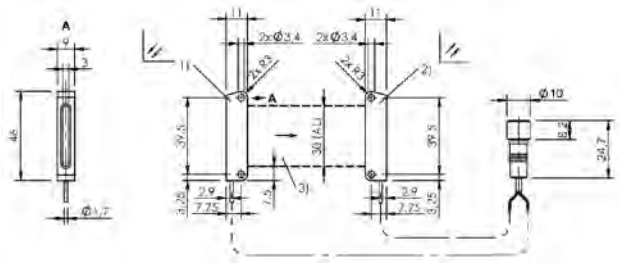

1) Emitter, 2) Receiver, 3) Light array

BOH00F6

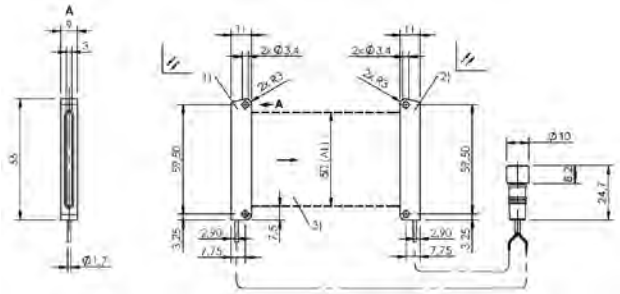

1) Emitter, 2) Receiver, 3) Light array

BOH00F7

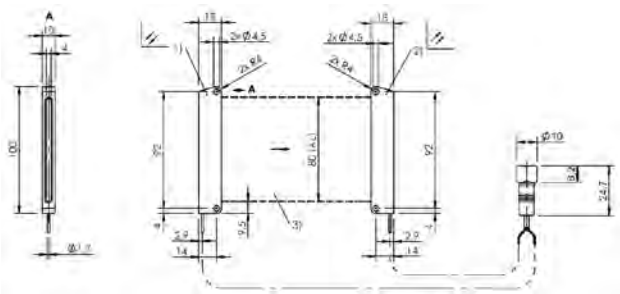

1) Emitter, 2) Receiver, 3) Light array

BOH00FF

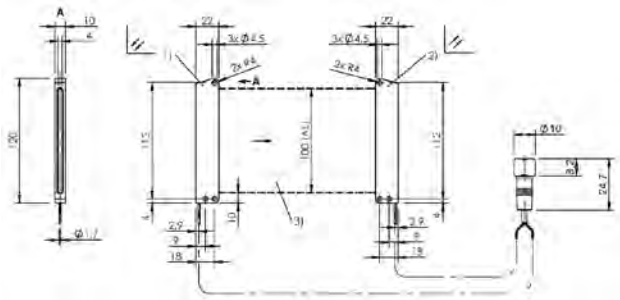

1) Emitter, 2) Receiver, 3) Light array

BOH00FH

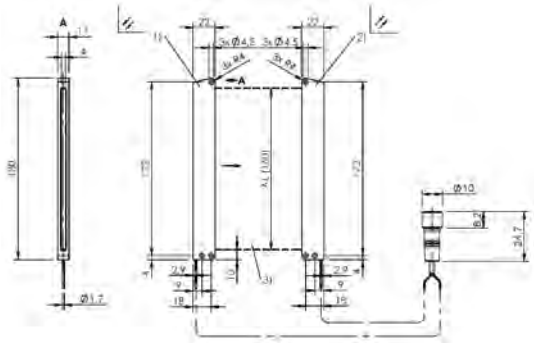

1) Emitter, 2) Receiver, 3) Light array

BOH00FJ

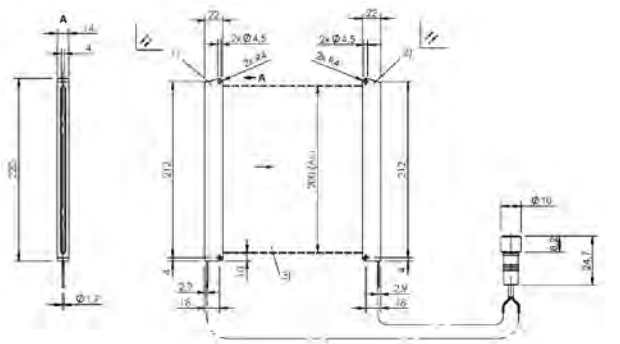

1) Emitter, 2) Receiver, 3) Light array

BOH00FK

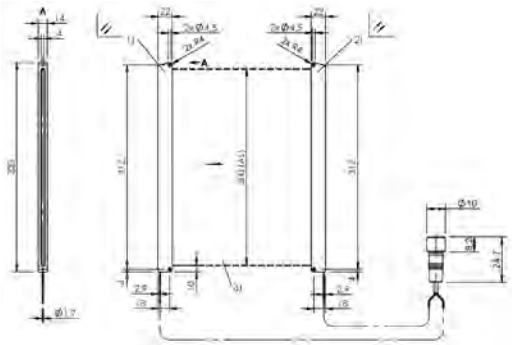

1) Emitter, 2) Receiver, 3) Light array

BOH00FL

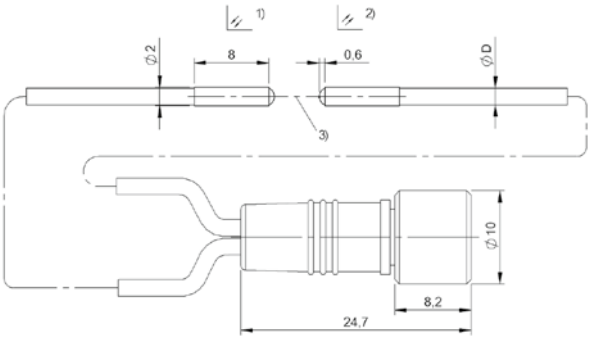

1) Emitter, 2) Receiver, 3) Optical axis

BOH005J, BOH000C, BOH000A, BOH000J

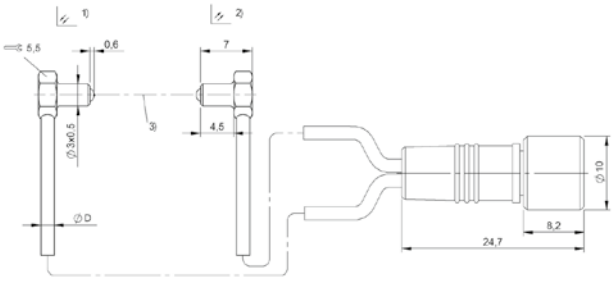

1) Emitter, 2) Receiver, 3) Optical axis

BOH000E

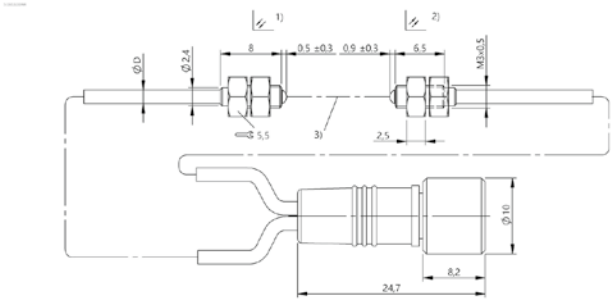

1) Emitter, 2) Receiver, 3) Optical axis

BOH0061, BOH000U, BOH000T

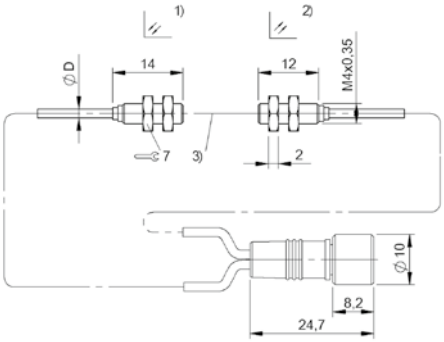

1) Emitter, 2) Receiver, 3) Optical axis

BOH00E6, BOH00E5

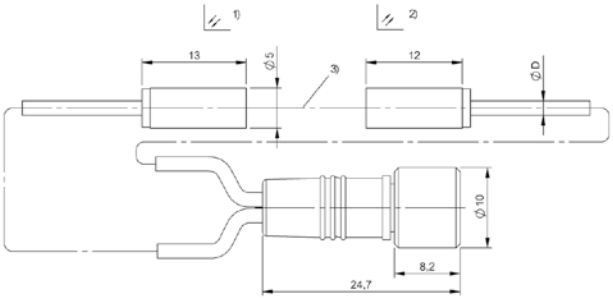

1) Emitter, 2) Receiver, 3) Optical axis

BOH0010

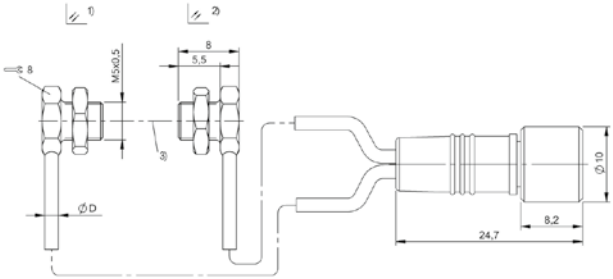

1) Emitter, 2) Receiver, 3) Optical axis

BOH000F

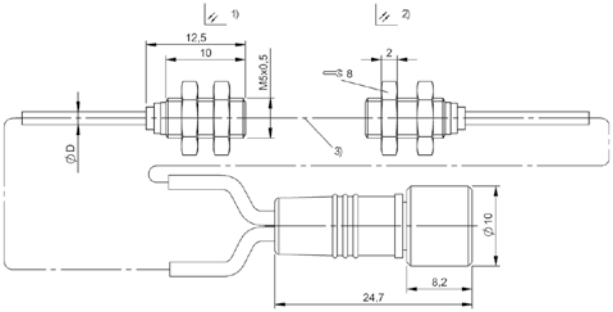

1) Emitter, 2) Receiver, 3) Optical axis

BOH0065, BOH0013, BOH000Y

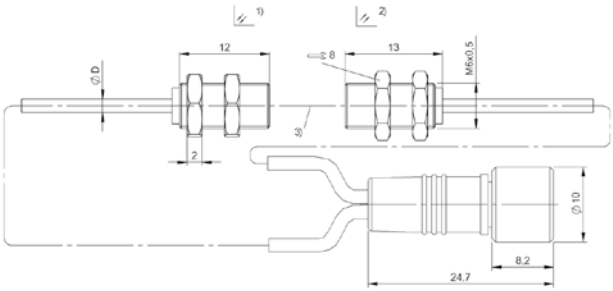

1) Emitter, 2) Receiver, 3) Optical axis

BOH006H, BOH000K

Do you need more details? Our Product Finder at www.balluff.com provides you with product-specific information, including technical drawings, data sheets, user guides and more for each individual product. All items are available for download.

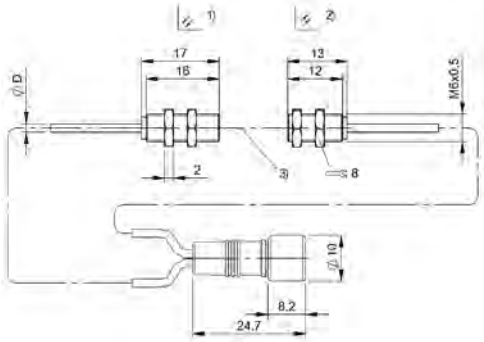

1) Emitter, 2) Receiver, 3) Optical axis

BOH000H

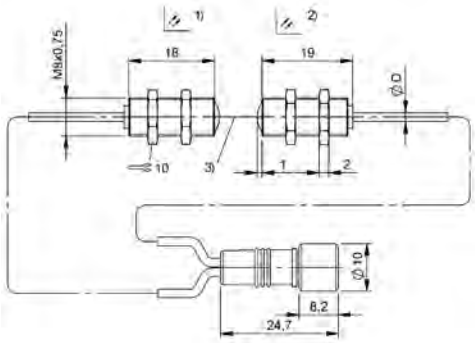

1) Emitter, 2) Receiver, 3) Optical axis

BOH0012

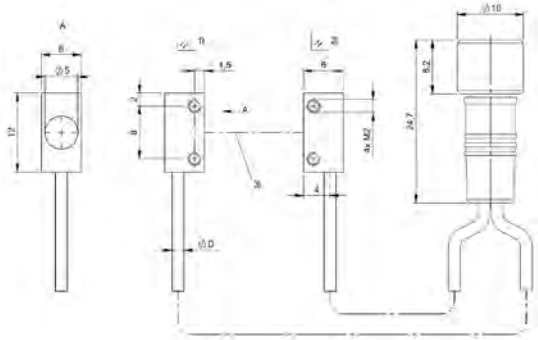

1) Emitter, 2) Receiver, 3) Optical axis

BOH006P, BOH000P, BOH000N, BOH000R

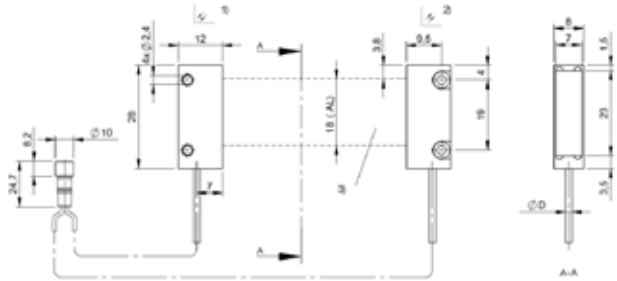

1) Emitter, 2) Receiver, 3) Light array

BOH00EL

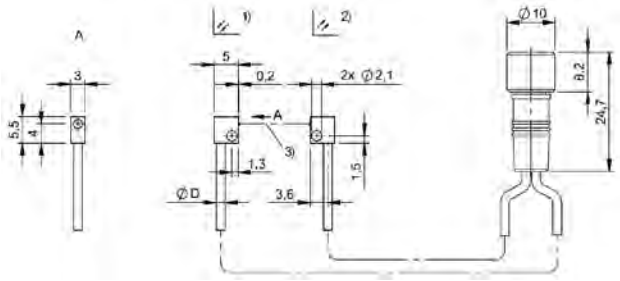

1) Emitter, 2) Receiver, 3) Optical axis

BOH001Z

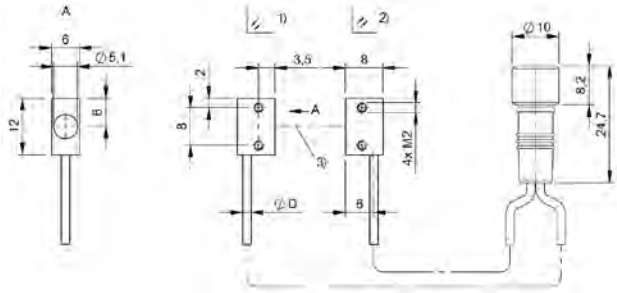

1) Emitter, 2) Receiver, 3) Optical axis

BOH0020, BOH007A

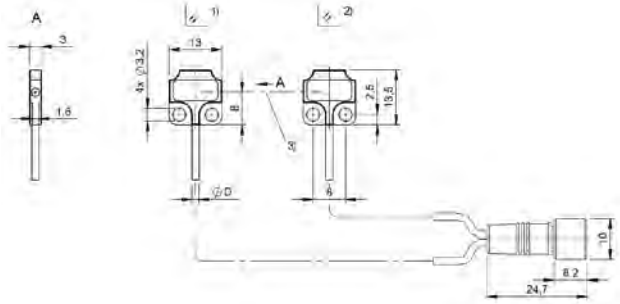

1) Emitter, 2) Receiver, 3) Optical axis

BOH002E

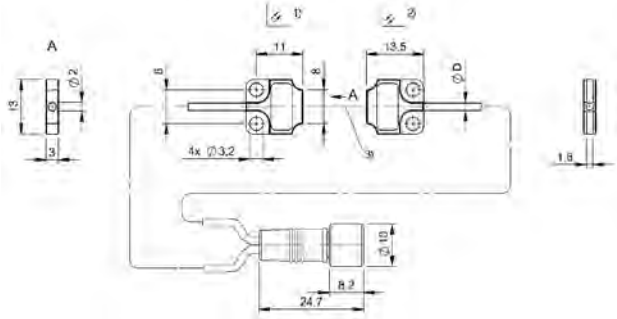

1) Emitter, 2) Receiver, 3) Optical axis

BOH002C

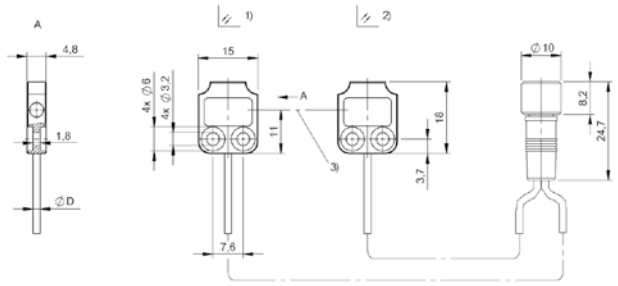

1) Emitter, 2) Receiver, 3) Optical axis

BOH002H

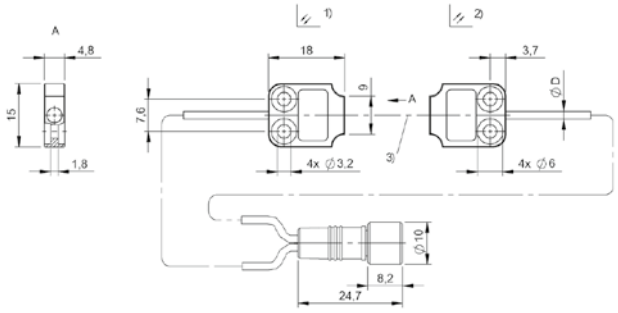

1) Emitter, 2) Receiver, 3) Optical axis

BOH002F

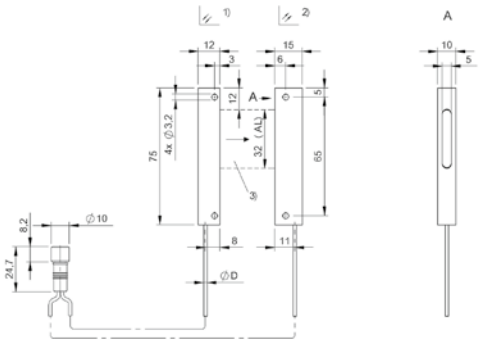

1) Emitter, 2) Receiver, 3) Light array

BOH0024

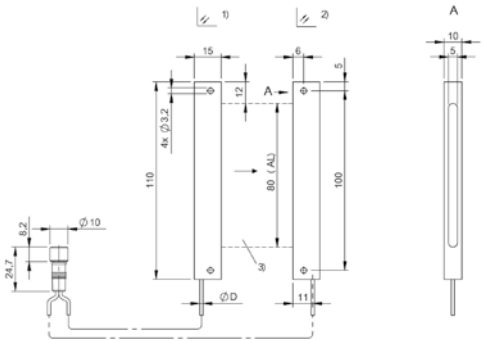

1) Emitter, 2) Receiver, 3) Light array

BOH002M

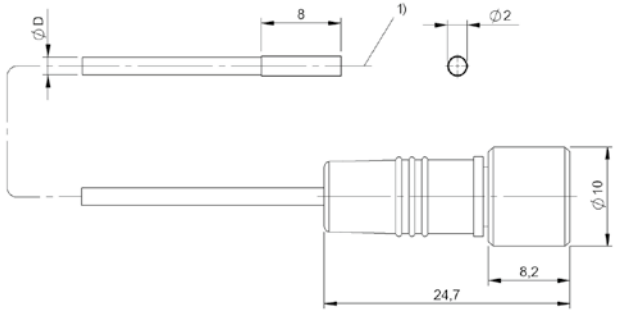

1) Optical axis

BOH0002, BOH0003

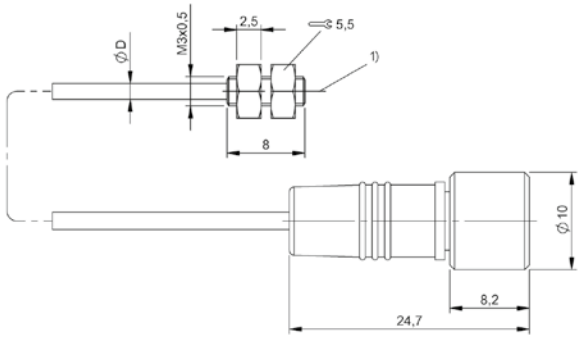

1) Optical axis

BOH0004, BOH0009

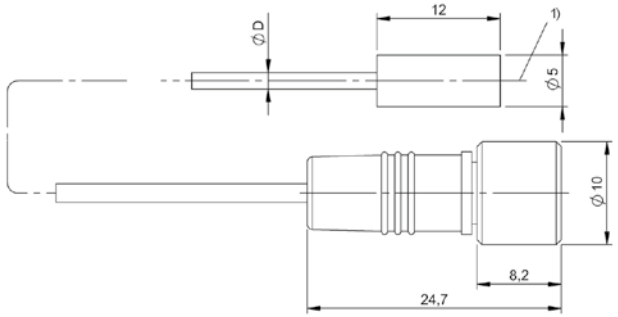

1) Optical axis

BOH003C, BOH0006, BOH0005

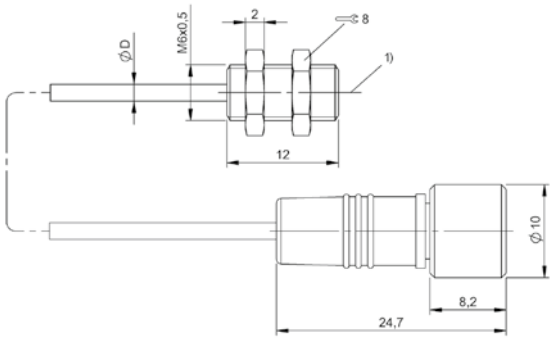

1) Optical axis

BOH003M, BOH0008, BOH0007

Do you need more details? Our Product Finder at www.balluff.com provides you with product-specific information, including technical drawings, data sheets, user guides and more for each individual product. All items are available for download.

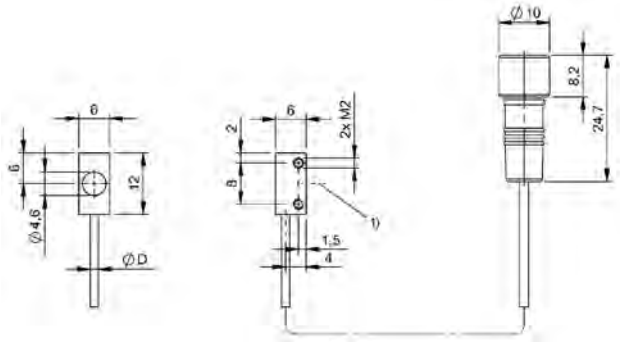

1) Optical axis

BOH003W, BOH000M, BOH000L

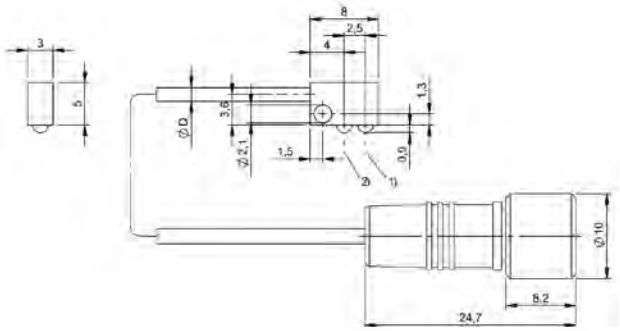

1) Optical axis emitter, 2) Optical axis receiver

BOH002K

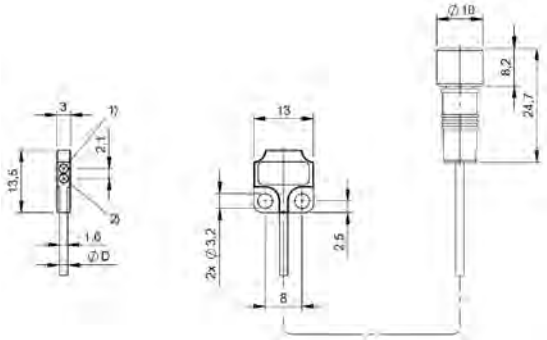

1) Optical axis emitter, 2) Optical axis receiver

BOH0028

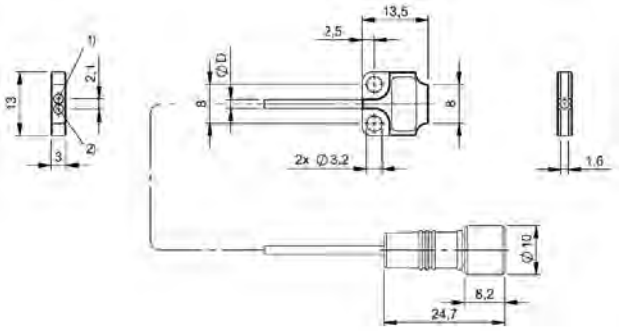

1) Optical axis emitter, 2) Optical axis receiver

BOH0027

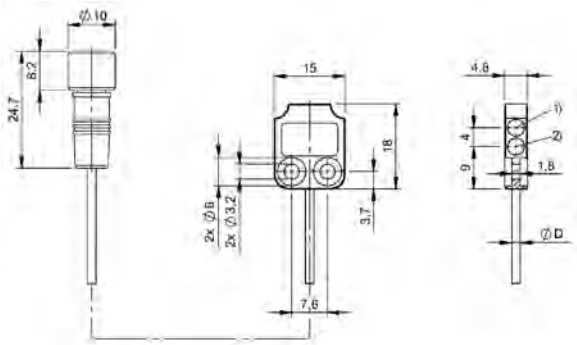

1) Optical axis emitter, 2) Optical axis receiver

BOH002A

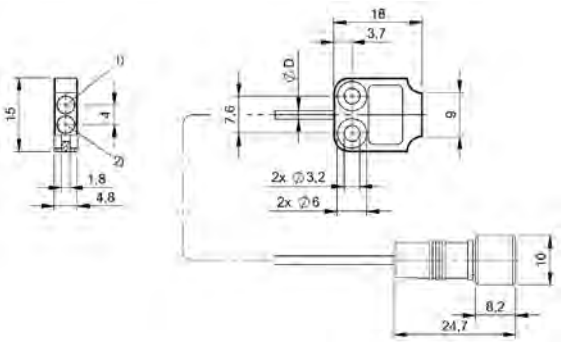

1) Optical axis emitter, 2) Optical axis receiver

BOH0029

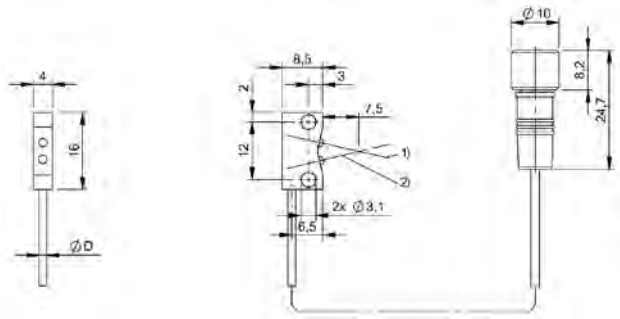

1) Optical axis emitter, 2) Optical axis receiver

BOH002L

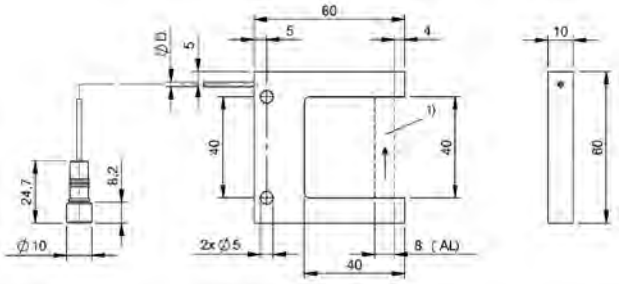

1) Light array

BOH001M

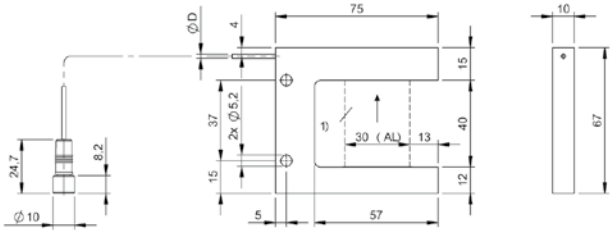

1) Light array

BOH001N

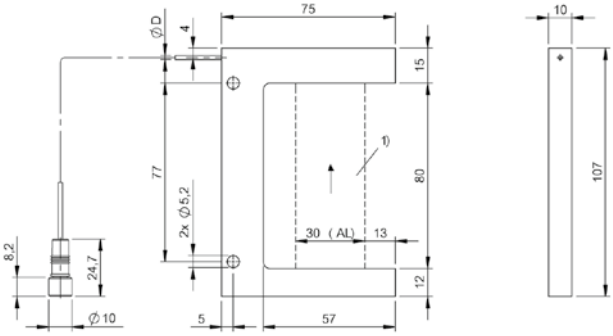

1) Light array

BOH001P

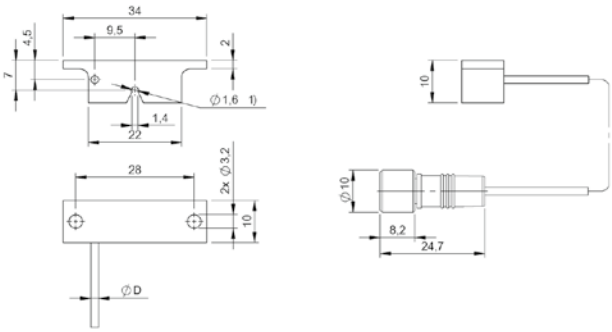

1) Hose fitting

BOH001R

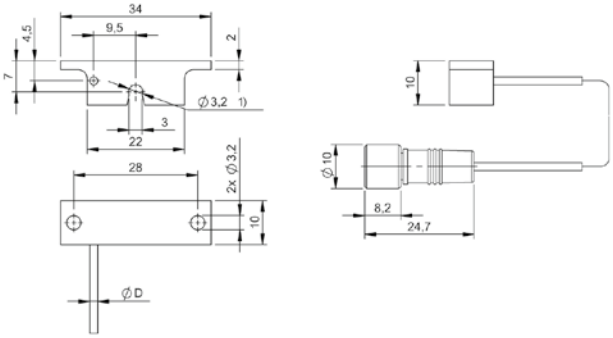

1) Hose fitting

BOH001Y, BOH001U

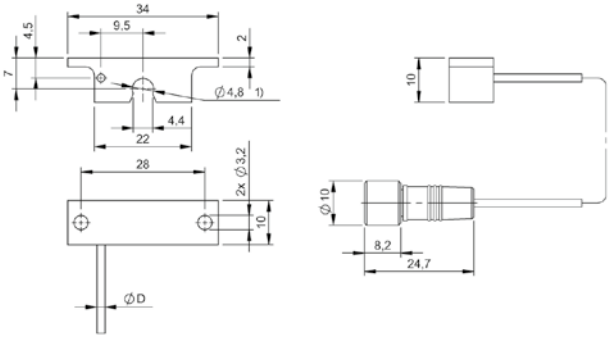

1) Hose fitting

BOH0019, BOH0015

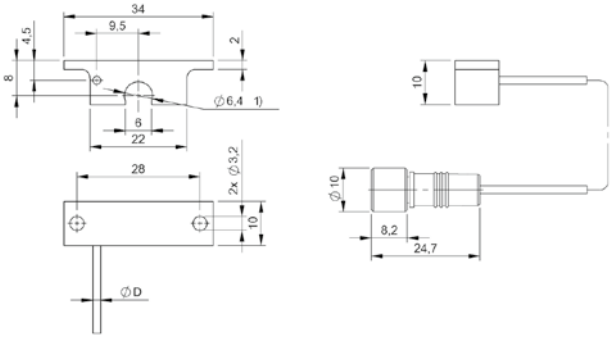

1) Hose fitting

BOH001A, BOH0016

PNP normally open/normally closed			**BAE00NE** BAE SA-OH-035-PP-DV02	
NPN normally open/normally closed	**BAE00PR** BAE SA-OH-035-NP-DV02	**BAE00PT** BAE SA-OH-035-NP-S75G		
Analog, voltage 0...10 V				
Analog, current 4...20 mA				
Series	SA-OH	SA-OH	SA-OH	
Dimension	15 x 36 x 61 mm	15 x 36 x 61 mm	15 x 36 x 61 mm	
Display	LED green: Power, Digital display, Switching state - LED yellow	LED green: Power, Digital display, Switching state - LED yellow	Output function- LED yellow, LED green: Power, Error - LED green, flashing, Signal strength - segment display	
Setting	Light-on/dark-on, Time function on/off, Delay time, Teach mode Aut/ Hys/Int/Pot	Light-on/dark-on, Time function on/off, Delay time, Teach mode Aut/ Hys/Int/Pot	Sensitivity (Sn), Light-on/ dark-on, Teach Sn, Read direction for segment display, Segment display on/off, Key disable on/off, Factory setting (Reset), Alarm threshold, Teach mode Aut/Fine/1-Pt/2-Pt, Hysteresis (4 levels), Integration time 4…128 ms, Upper and lower threshold, Delay time	
Adjuster	Slide switch 4 positions	Slide switch 4 positions	Slide switch 4 positions	
Connection	Cable, 2.00 m, PVC	M8x1 connector, 4-pin	Cable, 2.00 m, PVC	
Housing material	ABS PC	ABS PC	ABS PC	
Operating voltage Ub	10...30 VDC	10...30 VDC	10...30 VDC	
Approval/Conformity	CE, EAC	CE, EAC	CE, EAC	
Productview	Page 620	Page 620	Page 620	

	BAE00NF BAE SA-OH-035-PP-S75G				
				BAE00NH BAE SA-OH-038-UA-DV02	**BAE00N6** BAE SA-OH-038-UA-S75G
		BAE00N4 BAE SA-OH-038-IC-DV02	**BAE00N5** BAE SA-OH-038-IC-S75G		
	SA-OH	SA-OH	SA-OH	SA-OH	SA-OH
	15 x 36 x 61 mm	15 x 36 x 61 mm	15 x 36 x 61 mm	15 x 36 x 61 mm	15 x 36 x 61 mm
	Output function- LED yellow, LED green: Power, Error - LED green, flashing, Signal strength - segment display	LED green: Power, Signal strength - segment display	LED green: Power, Signal strength - segment display	LED green: Power, Signal strength - segment display	LED green: Power, Signal strength - segment display
	Sensitivity (Sn), Light-on/ dark-on, Teach Sn, Read direction for segment display, Segment display on/off, Key disable on/off, Factory setting (Reset), Alarm threshold, Teach mode Aut/Fine/1-Pt/2-Pt, Hysteresis (4 levels), Integration time 4…128 ms, Upper and lower threshold, Delay time	Sensitivity (Sn), Teach Sn, Teach mode Aut/ Pot, Read direction for segment display, Segment display on/off, Key disable on/off, Factory setting (Reset)	Sensitivity (Sn), Teach Sn, Teach mode Aut/ Pot, Read direction for segment display, Segment display on/off, Key disable on/off, Factory setting (Reset)	Sensitivity (Sn), Teach Sn, Teach mode Aut/ Pot, Read direction for segment display, Segment display on/off, Key disable on/off, Factory setting (Reset)	Sensitivity (Sn), Teach Sn, Teach mode Aut/ Pot, Read direction for segment display, Segment display on/off, Key disable on/off, Factory setting (Reset)
	Slide switch 4 positions	Slide switch 4 positions	Slide switch 4 positions	Slide switch 4 positions	Slide switch 4 positions
	Connector, M8x1 connector, 4-pin	Cable, 2.00 m, PVC	Connector, M8x1 connector, 4-pin	Cable, 2.00 m, PVC	Connector, M8x1 connector, 4-pin
	ABS PC	ABS PC	ABS PC	ABS PC	ABS PC
	10...30 VDC	15...30 VDC	15...30 VDC	15...30 VDC	15...30 VDC
	CE, EAC	CE, EAC	CE, EAC	CE, EAC	CE, EAC
	Page 620	Page 620	Page 620	Page 620	Page 620

PNP normally open/normally closed			**BAE00YC** BAE SA-OH-050-PP-DV02	
PNP dynamic normally open/normally closed	**BAE00NJ** BAE SA-OH-040-PP-DV02	**BAE00N7** BAE SA-OH-040-PP-S75G		
Series	SA-OH	SA-OH	SA-OH	
Dimension	15 x 36 x 61 mm	15 x 36 x 61 mm	15 x 36 x 61 mm	
Display	Output function- LED yellow, LED green: Power, Error - LED green, flashing, Signal strength - segment display	Output function- LED yellow, LED green: Power, Error - LED green, flashing, Signal strength - segment display	Output function- LED yellow, LED green: Power, Error - LED green, flashing, Signal strength - segment display	
Setting	Sensitivity (Sn), Light-on/dark-on, Teach Sn, Read direction for segment display, Segment display on/off, Key disable on/off, Factory setting (Reset), Hysteresis (4 levels), Integration time 4…128 ms, Delay time, Teach mode Aut/Hys/Int/Pot	Sensitivity (Sn), Light-on/dark-on, Teach Sn, Read direction for segment display, Segment display on/off, Key disable on/off, Factory setting (Reset), Hysteresis (4 levels), Integration time 4…128 ms, Delay time, Teach mode Aut/Hys/Int/Pot	Sensitivity (Sn), Light-on/dark-on, Read direction for segment display, Segment display on/off, Key disable on/off, Factory setting (Reset), Alarm threshold, Teach mode Aut/Fine/1-Pt/2-Pt, Hysteresis (4 levels), Upper and lower threshold, Delay time, Window function/standard switching function	
Adjuster	Slide switch 4 positions	Slide switch 4 positions	Slide switch 4 positions	
Connection	Cable, 2.00 m, PVC	Connector, M8x1 connector, 4-pin	Cable, 2.00 m, PVC	
Housing material	ABS PC	ABS PC	ABS PC	
Operating voltage Ub	10...30 VDC	10...30 VDC	10...30 VDC	
Approval/Conformity	CE, EAC	CE, EAC	CE, EAC	
Productview	Page 620	Page 620	Page 620	

	BAE00Y7 BAE SA-OH-050-PP-S75G				
	SA-OH				
	15 x 36 x 61 mm				
	Output function- LED yellow, LED green: Power, Error - LED green, flashing, Signal strength - segment display				
	Sensitivity (Sn), Light-on/dark-on, Read direction for segment display, Segment display on/off, Key disable on/off, Factory setting (Reset), Alarm threshold, Teach mode Aut/Fine/1-Pt/2-Pt, Hysteresis (4 levels), Upper and lower threshold, Delay time, Window function/standard switching function				
	Slide switch 4 positions				
	Connector, M8x1 connector, 4-pin				
	ABS PC				
	10...30 VDC				
	CE, EAC				
	Page 620				

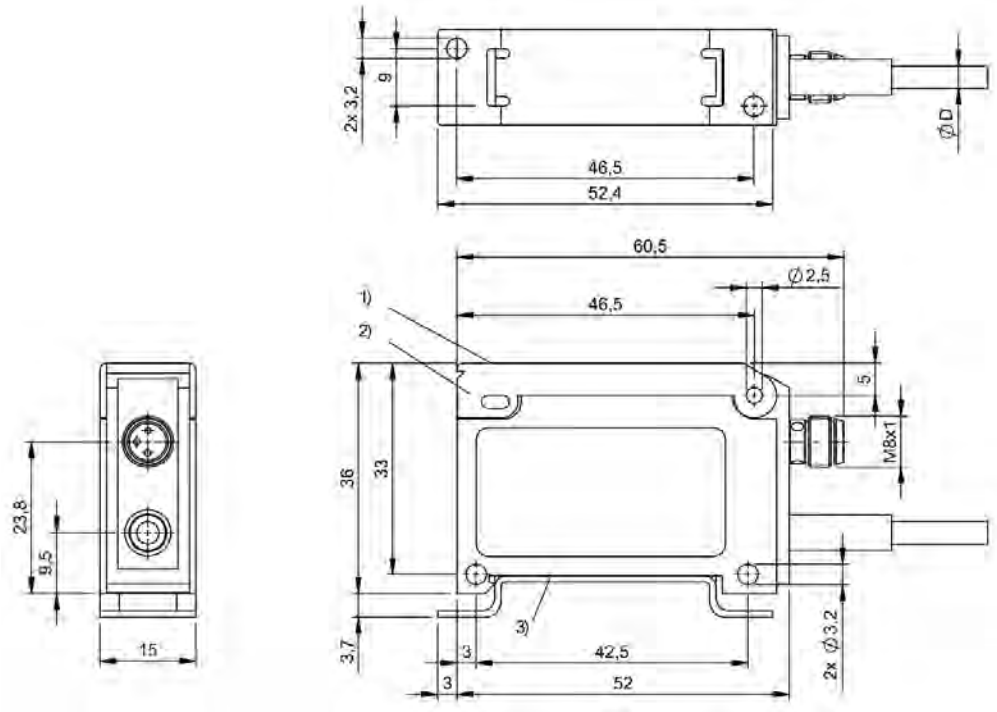

1) Display and control panel

BAE00PR, BAE00NE, BAE00N4, BAE00NH, BAE00NJ, BAE00YC

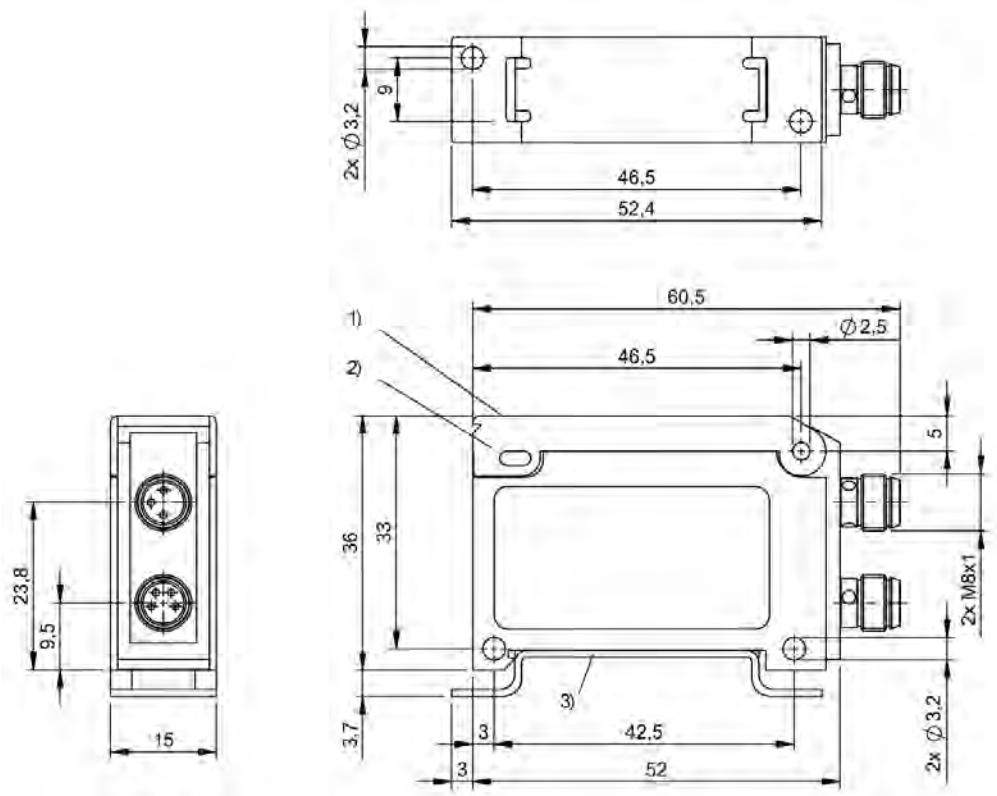

1) Display and control panel, 2) Cover, 3) DIN rail

BAE00PT, BAE00NF, BAE00N5, BAE00N6, BAE00N7, BAE00Y7

	BOD001L BOD 6K-RA02-S75	BOD001R BOD 6K-RA03-S75	BOD001Z BOD 6K-RA04-S75
Series	6K	6K	6K
Dimension	12 x 41.5 x 21.6 mm	12 x 41.5 x 21.6 mm	12 x 41.5 x 21.6 mm
Interface	Analog, voltage 1…10 V linear rising/falling PNP NO/NC	Analog, voltage 1…10 V linear rising/falling PNP NO/NC	Analog, voltage 1…10 V linear rising/falling PNP NO/NC
Principle of operation	Photoelectric distance sensor	Photoelectric distance sensor	Photoelectric distance sensor
Principle of optical operation	Triangulation	Triangulation	Triangulation
Beam characteristic	Divergent	Divergent	Divergent
Light type	LED, red light	LED, red light	LED, red light
Light spot size	Ø 5 mm at 50 mm	Ø 9.5 mm at 100 mm	Ø 5 mm at 50 mm
Range	20...80 mm	30...200 mm	10...85 mm
Accuracy	±0.5 % FS	±1 % FS	±0.8 % FS
Repeat accuracy	0.5 %FS	0.5 %FS	0.59 %FS
Resolution	≤ 120 µm	≤ 0.68 mm	≤ 0.15 mm
Connection	Connector, M8x1-Male, 4-pin	Connector, M8x1-Male, 4-pin	Connector, M8x1-Male, 4-pin
Housing material	ABS	ABS	ABS
Operating voltage Ub	13...30 VDC	13...30 VDC	13...30 VDC
Approval/Conformity	CE, cULus, EAC, Ecolab, WEEE	CE, cULus, EAC, Ecolab, WEEE	CE, cULus, EAC, Ecolab, WEEE
Trademark	—	—	—
Productview	Page 630	Page 630	Page 630

	BOD002L BOD 21M-LBI05-S4	**BOD000L** BOD 21M-LA01-S92	**BOD000M** BOD 21M-LA02-S92	**BOD000N** BOD 21M-LA04-S92	**BOD000P** BOD 21M-LB01-S92
	21M	21M	21M	21M	21M
	15 x 51 x 42.5 mm	15 x 42.5 x 50 mm	15 x 42.5 x 50 mm	15 x 42.5 x 50 mm	15 x 42.5 x 50 mm
	IO-Link 1.1 Analog, current 4…20 mA linear rising/falling 2x PNP/NPN NO/NC	Analog, voltage 1…10 V linear rising 2x PNP/NPN NO/NC	Analog, voltage 1…10 V linear rising 2x PNP/NPN NO/NC	Analog, voltage 1…10 V linear rising 2x PNP/NPN NO/NC	Analog, current 4…20 mA linear rising 2x PNP/NPN NO/NC
	Photoelectric distance sensor	Photoelectric distance sensor	Photoelectric distance sensor	Photoelectric distance sensor	Photoelectric distance sensor
	Triangulation	Triangulation	Triangulation	Triangulation	Triangulation
	Focus, typical at 400 mm	Collimated	Collimated	Collimated	Collimated
	Laser red light	Laser red light	Laser red light	Laser red light	Laser red light
	1.5 x 0.5 mm at 200 mm	Ø 1 mm at 45 mm	Ø 1 mm at 200 mm	1 x 6 mm at 500 mm	Ø 1 mm at 45 mm
	30...200 mm, adjustable	25...45 mm, adjustable	20...200 mm, adjustable	20...500 mm, adjustable	25...45 mm, adjustable
	±1 mm max. (30...170 mm) ±3 mm max. (170...200 mm)s	±0.5 % FS	±1 % FS	±3 % FS	±0.5 % FS
	≤ ± 0.25 mm	0.1 %FS	1 %FS	1 %FS	0.1 %FS
	≤ 10 µm typ. (30...170 mm) 100 µm typ. (170...200 mm)	≤ 30 µm	100...200 µm	100...500 µm	≤ 30 µm
	Connector, M12x1-Male, 4-pin	Connector, M12x1-Male, 5-pin	Connector, M12x1-Male, 5-pin	Connector, M12x1-Male, 5-pin	Connector, M12x1-Male, 5-pin
	Zinc, Die casting, Painted Aluminum, Glass, PMMA, black	Zinc, Die casting Aluminum	Zinc, Die casting Aluminum	Zinc, Die casting Aluminum	Zinc, Die casting Aluminum
	15...30 VDC	18...30 VDC	18...30 VDC	18...30 VDC	18...30 VDC
	CE, cULus, EAC, IO-Link, WEEE	CE, EAC, cULus, WEEE	CE, EAC, cULus, WEEE	CE, EAC, cULus, WEEE	CE, EAC, cULus, WEEE
	–	–	–	–	–
	Page 631	Page 631	Page 631	Page 631	Page 631

	BOD000R BOD 21M-LB02-S92	BOD000T BOD 21M-LB04-S92	BOD0020 BOD 23K-LI01-S4	
Series	21M	21M	23K	
Dimension	15 x 42.5 x 50 mm	15 x 42.5 x 50 mm	51 x 23 x 52.4 mm	
Interface	Analog, current 4…20 mA linear rising 2x PNP/NPN NO/NC	Analog, current 4…20 mA linear rising 2x PNP/NPN NO/NC	IO-Link 1.1 PNP/NPN/ Auto-Detect NO/NC	
Principle of operation	Photoelectric distance sensor	Photoelectric distance sensor	Photoelectric distance sensor	
Principle of optical operation	Triangulation	Triangulation	Light time-of-flight	
Beam characteristic	Collimated	Collimated	Collimated	
Light type	Laser red light	Laser red light	Laser red light	
Light spot size	Ø 1 mm at 200 mm	1 x 6 mm at 500 mm	5.5 x 7 mm at 5 m	
Range	20...200 mm, adjustable	20...500 mm, adjustable	100...5000 mm	
Accuracy	±1 % FS	±3 % FS	±0.6 % FS	
Repeat accuracy	1 %FS	1 %FS	0.024 %FS	
Resolution	100...200 µm	100...500 µm	≤ 5 mm	
Connection	Connector, M12x1-Male, 5-pin	Connector, M12x1-Male, 5-pin	Connector, M12x1-Male, 4-pin	
Housing material	Zinc, Die casting Aluminum	Zinc, Die casting Aluminum	ABS	
Operating voltage Ub	18...30 VDC	18...30 VDC	18...30 VDC	
Approval/Conformity	CE, EAC, cULus, WEEE	CE, EAC, cULus, WEEE	CE, cULus, EAC, Ecolab, WEEE	
Trademark	—	—	—	
Productview	Page 631	Page 631	Page 632	

	BOD001N BOD 23K-LA01-S92	BOD001P BOD 23K-LB01-S92	BOD002M BOD 24K-LPI07-S4	BOD002N BOD 24K-LPI08-S4	BOD0002 BOD 26K-LA01-S4-C
	23K	23K	24K	24K	26K
	51 x 23 x 52.4 mm	51 x 23 x 52.4 mm	50 x 21 x 50 mm	50 x 21 x 50 mm	17 x 50 x 50 mm
	Analog, voltage 0…10 V linear rising/falling PNP/ NPN/Auto-Detect NO/NC	Analog, current 4…20 mA linear rising/falling PNP/ NPN/Auto-Detect NO/NC	IO-Link 1.1 Analog, voltage/analog, current selectable 4…20 mA 0…10 V 2x PNP/NPN NO/NC	IO-Link 1.1 Analog, voltage/analog, current selectable 4…20 mA 0…10 V 2x PNP/NPN NO/NC	Analog, voltage 0…10 V linear rising
	Photoelectric distance sensor	Photoelectric distance sensor	Photoelectric sensor	Photoelectric sensor	Photoelectric distance sensor
	Light time-of-flight	Light time-of-flight	Triangulation	Triangulation	Triangulation
	Collimated	Collimated	Divergent	Divergent	Divergent
	Laser red light	Laser red light	Laser red light	Laser red light	Laser red light
	5.5 x 7 mm at 5 m	5.5 x 7 mm at 5 m	1 x 1 mm at 100 mm	1.2 x 1.2 mm at 650 mm	Ø 0.8 mm at 65 mm
	100...5000 mm	100...5000 mm	50...100 mm	50...650 mm	45...85 mm
	±0.6 % FS	±0.6 % FS	±0.5 %	±1 %	±1 % FS
	0.024 %FS	0.024 %FS	± 50 µm	± 50 µm	—
	≤ 5.0 mm	≤ 5.0 mm	≤ 10 µm	≤ 100 µm	≤ 80 µm
	Connector, M12x1-Male, 5-pin	Connector, M12x1-Male, 5-pin	Connector, M12x1-Male, 4-pin	Connector, M12x1-Male, 4-pin	Connector, M12x1-Male, 4-pin
	ABS	ABS	Plastic	Plastic	ABS
	18...30 VDC	18...30 VDC	18...30 VDC	18...30 VDC	18...28 VDC
	CE, cULus, EAC, Ecolab, WEEE	CE, cULus, EAC, Ecolab, WEEE	CE, cULus, EAC, WEEE	CE, cULus, EAC, WEEE	CE, cULus, EAC, WEEE
	—	—	—	—	—
	Page 632	Page 632	Page 633	Page 633	Page 633

	BOD0004 BOD 26K-LA02-S4-C	BOD0005 BOD 26K-LB04-S115-C	BOD0006 BOD 26K-LB05-S115-C
Series	26K	26K	26K
Dimension	17 x 50 x 50 mm	17 x 50 x 50 mm	17 x 50 x 50 mm
Interface	Analog, voltage 0…10 V linear rising	Analog, current 4…20 mA linear rising/falling 2x PNP NO/NC	Analog, current 4…20 mA linear rising/falling 2x PNP NO/NC
Principle of operation	Photoelectric distance sensor	Photoelectric distance sensor	Photoelectric distance sensor
Principle of optical operation	Triangulation	Triangulation	Triangulation
Beam characteristic	Divergent	Divergent	Divergent
Light type	Laser red light	Laser red light	Laser red light
Light spot size	Ø 0.8 mm at 65 mm	1.5 x 3.25 mm at 100 mm	2 x 4.5 mm at 300 mm
Range	45...85 mm	30...100 mm, adjustable	80...300 mm, adjustable
Accuracy	±1 % FS	±0.25 %FS	±0.25 %FS
Repeat accuracy	—	0.25 %FS	0.25 %FS
Resolution	≤ 20 µm	0.1 %FS	0.1 %FS
Connection	Connector, M12x1-Male, 4-pin	Connector, M12x1-Male, 8-pin	Connector, M12x1-Male, 8-pin
Housing material	ABS	ABS	ABS
Operating voltage Ub	18...28 VDC	18...30 VDC	18...30 VDC
Approval/Conformity	CE, cULus, EAC, WEEE	CE, cULus, EAC, WEEE	CE, cULus, EAC, WEEE
Trademark	—	—	—
Productview	Page 633	Page 634	Page 634

	BOD0007 BOD 26K-LB06-S92-C	BOD0008 BOD 26K-LB07-S92-C	BOD000C BOD 26K-LBR04-S115-C	BOD000E BOD 26K-LBR05-S115-C	BOD001Y BOD 37M-LPR02-S115
	26K	26K	26K	26K	37M
	17 x 50 x 50 mm	17 x 50 x 50 mm	17 x 50 x 50 mm	17 x 50 x 50 mm	60 x 37 x 72.3 mm
	Analog, current 4…20 mA linear rising/falling PNP NO/NC	Analog, current 4…20 mA linear rising/falling PNP NO/NC	RS485 Analog, current 4…20 mA linear rising/ falling 3x PNP NO/NC	RS485 Analog, current 4…20 mA linear rising/ falling 3x PNP NO/NC	RS485 Analog, voltage/ Analog, current 0.2…10 V/4…20 mA linear rising/ falling 2x PNP/NPN/ push-pull NO/NC
	Photoelectric distance sensor	Photoelectric distance sensor	Photoelectric distance sensor	Photoelectric distance sensor	Photoelectric distance sensor
	Triangulation	Triangulation	Triangulation	Triangulation	Light time-of-flight
	Divergent	Divergent	Divergent	Divergent	Collimated
	Laser red light	Laser red light	Laser red light	Laser red light	Laser red light
	1.5 x 3.25 mm at 100 mm	2 x 4.5 mm at 300 mm	1.5 x 3.25 mm at 100 mm	2 x 4.5 mm at 300 mm	Ø 15 mm at 10 m
	30...100 mm, adjustable	80...300 mm, adjustable	30...100 mm, adjustable	80...300 mm, adjustable	200...20000 mm
	±0.25 %FS	±0.25 %FS	±0.25 %FS	±0.25 %FS	±0.035 % FS
	—	—	0.25 %FS	0.25 %FS	0.01 %FS
	0.1 %FS	0.1 %FS	0.1 %FS	0.1 %FS	≤ 1.0 mm
	Connector, M12x1-Male, 5-pin	Connector, M12x1-Male, 5-pin	Connector, M12x1-Male, 8-pin	Connector, M12x1-Male, 8-pin	Connector, M12x1-Male, 8-pin
	ABS	ABS	ABS	ABS	Zinc, Die casting
	18...30 VDC	18...30 VDC	18...30 VDC	18...30 VDC	19.2...28.8 VDC
	CE, cULus, EAC, WEEE	CE, cULus, EAC, WEEE	CE, cULus, EAC, WEEE	CE, cULus, EAC, WEEE	CE, cULus, EAC, WEEE
	—	—	—	—	—
	Page 634	Page 634	Page 634	Page 634	Page 635

	BOD001U BOD 37M-LA01-S92	BOD001W BOD 37M-LB01-S92	BOD001J BOD 66M-LA12-S92	
Series	37M	37M	66M	
Dimension	60 x 37 x 72.3 mm	60 x 37 x 72.3 mm	30 x 100.5 x 73.2 mm	
Interface	Analog, voltage 0.2…10 V linear rising/falling 2x PNP/NPN/push-pull NO/NC	Analog, current 4…20 mA linear rising/falling 2x PNP/NPN/push-pull NO/NC	Analog, voltage 1…10 V linear rising/falling PNP/NPN NO/NC	
Principle of operation	Photoelectric distance sensor	Photoelectric distance sensor	Photoelectric distance sensor	
Principle of optical operation	Light time-of-flight	Light time-of-flight	Triangulation	
Beam characteristic	Collimated	Collimated	Divergent	
Light type	Laser red light	Laser red light	Laser red light	
Light spot size	Ø 15 mm at 8 m	Ø 15 mm at 8 m	Ø 1 mm at 800 mm	
Range	200...10000 mm	200...10000 mm	150...800 mm	
Accuracy	±0.1 % FS	±0.1 % FS	±1.5 %FS	
Repeat accuracy	0.01 %FS	0.01 %FS	0.5 %FS	
Resolution	≤ 1.0 mm	≤ 1.0 mm	100...800 µm	
Connection	Connector, M12x1-Male, 5-pin	Connector, M12x1-Male, 5-pin	Connector, M12x1-Male, 5-pin	
Housing material	Zinc, Die casting	Zinc, Die casting	Zinc, Die casting, Painted	
Operating voltage Ub	19.2...28.8 VDC	19.2...28.8 VDC	18...30 VDC	
Approval/Conformity	CE, cULus, EAC, WEEE	CE, cULus, EAC, WEEE	CE, EAC, WEEE	
Trademark	—	—	—	
Productview	Page 635	Page 635	Page 636	

	BOD001E BOD 66M-LA14-S92	BOD001H BOD 66M-RA11-S92	BOD001K BOD 66M-LB12-S92	BOD001F BOD 66M-LB14-S92	BOD001C BOD 66M-RB11-S92
	66M	66M	66M	66M	66M
	30 x 100.5 x 73.2 mm	30 x 100.5 x 73.2 mm	30 x 100.5 x 73.2 mm	30 x 100.5 x 73.2 mm	30 x 100.5 x 73.2 mm
	Analog, voltage 1…10 V linear rising/falling PNP/ NPN NO/NC	Analog, voltage 1…10 V linear rising/falling PNP/ NPN NO/NC	Analog, current 4…20 mA linear rising/falling PNP/ NPN NO/NC	Analog, current 4…20 mA linear rising/falling PNP/ NPN NO/NC	Analog, current 4…20 mA linear rising/falling PNP/ NPN NO/NC
	Photoelectric distance sensor	Photoelectric distance sensor	Photoelectric distance sensor	Photoelectric distance sensor	Photoelectric distance sensor
	Triangulation	Triangulation	Triangulation	Triangulation	Triangulation
	Divergent	Divergent	Divergent	Divergent	Divergent
	Laser red light	LED, red light	Laser red light	Laser red light	LED, red light
	2 x 6 mm at 2 m	Ø 15 mm at 600 mm	Ø 1 mm at 800 mm	2 x 6 mm at 2 m	Ø 15 mm at 600 mm
	150...2000 mm	100...600 mm	150...800 mm	150...2000 mm	100...600 mm
	±1.5 %FS	±1.5 %FS	±1.5 %FS	±1.5 %FS	±1.5 %FS
	0.5 %FS	0.5 %FS	0.5 %FS	0.5 %FS	0.5 %FS
	1...3 mm	100...500 µm	100...800 µm	1...3 mm	100...500 µm
	Connector, M12x1-Male, 5-pin	Connector, M12x1-Male, 5-pin	Connector, M12x1-Male, 5-pin	Connector, M12x1-Male, 5-pin	Connector, M12x1-Male, 5-pin
	Zinc, Die casting, Painted	Zinc, Die casting, Painted	Zinc, Die casting, Painted	Zinc, Die casting, Painted	Zinc, Die casting, Painted
	18...30 VDC	18...30 VDC	18...30 VDC	18...30 VDC	18...30 VDC
	CE, EAC, WEEE	CE, EAC, WEEE	CE, EAC, WEEE	CE, EAC, WEEE	CE, EAC, WEEE
	—	—	—	—	—
	Page 636	Page 636	Page 636	Page 636	Page 636

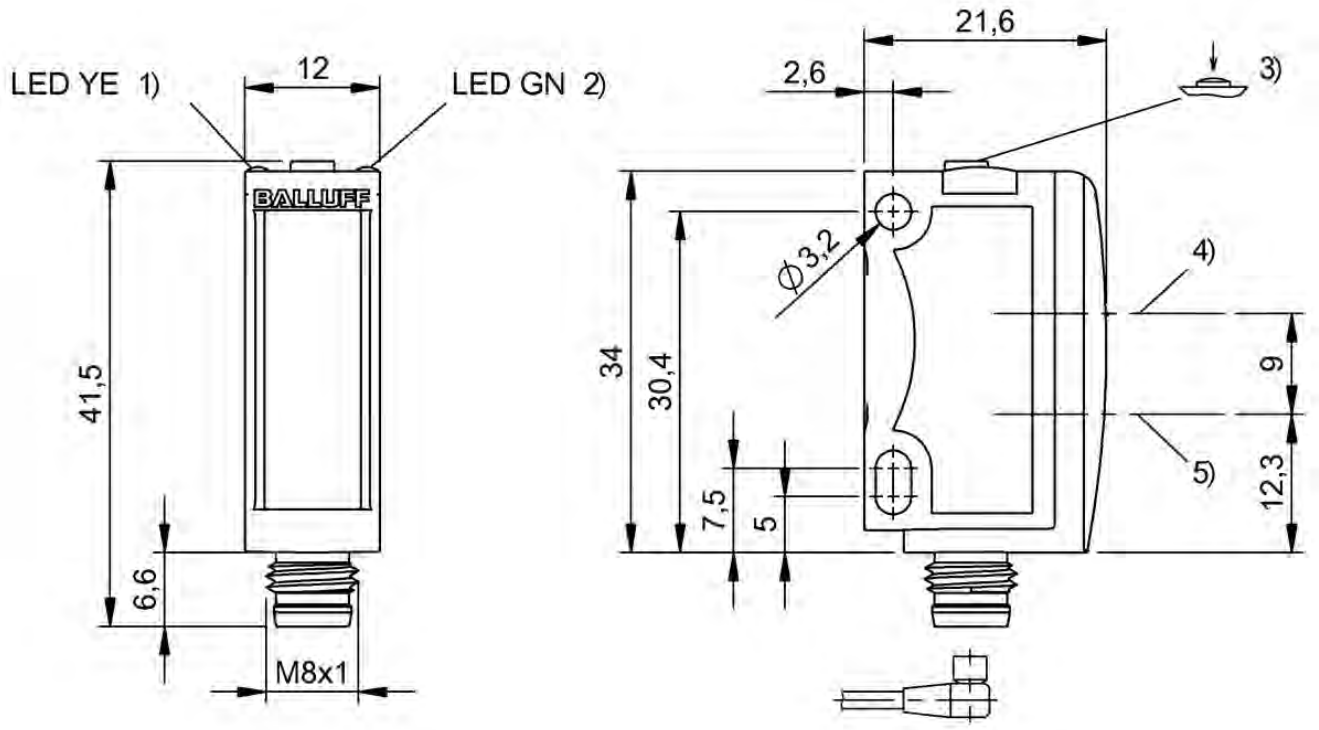

1) Output function, 2) Operating voltage, 3) Sn, light/dark, 4) Optical axis receiver, 5) Optical axis emitter

BOD001L, BOD001Z

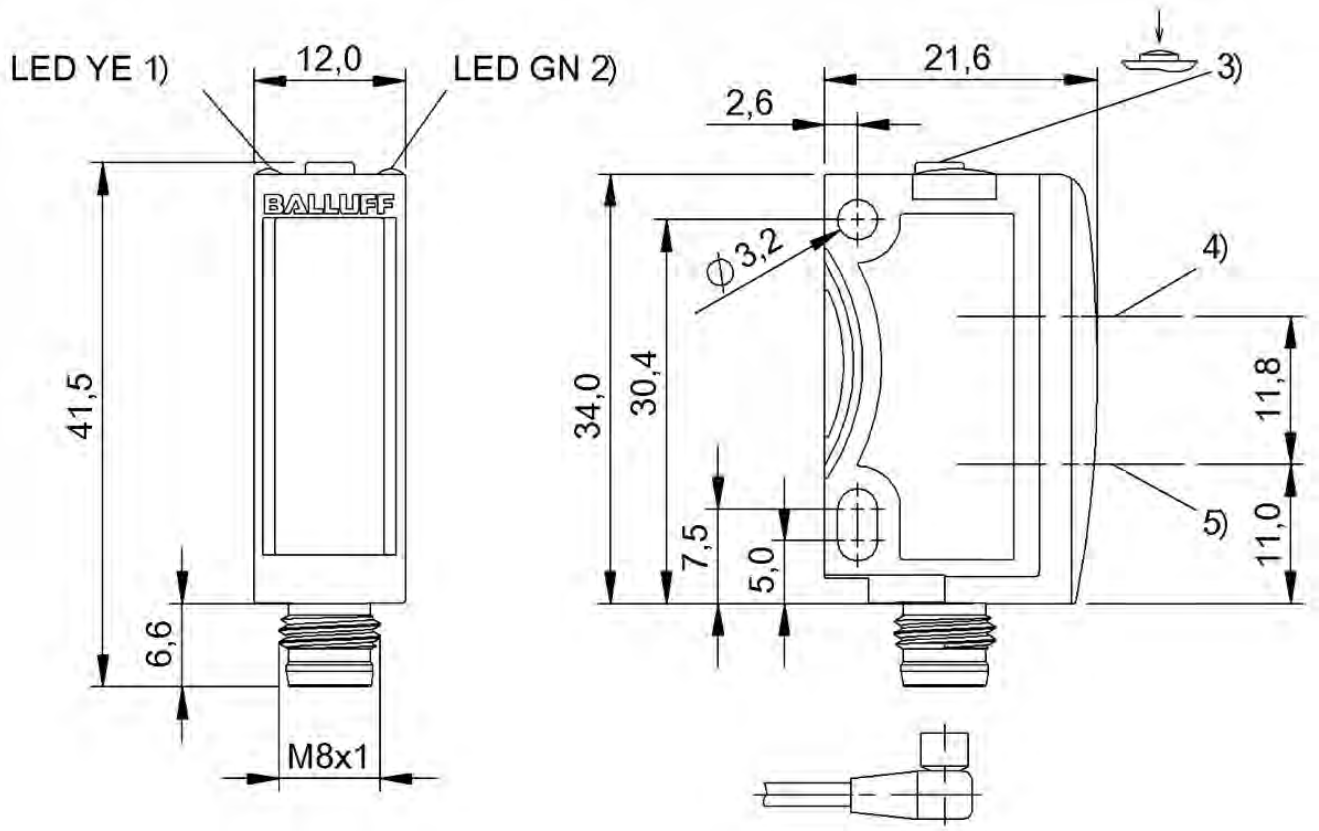

1) Output function, 2) Operating voltage, 3) Sn, light/dark, 4) Optical axis receiver, 5) Optical axis emitter

BOD001R

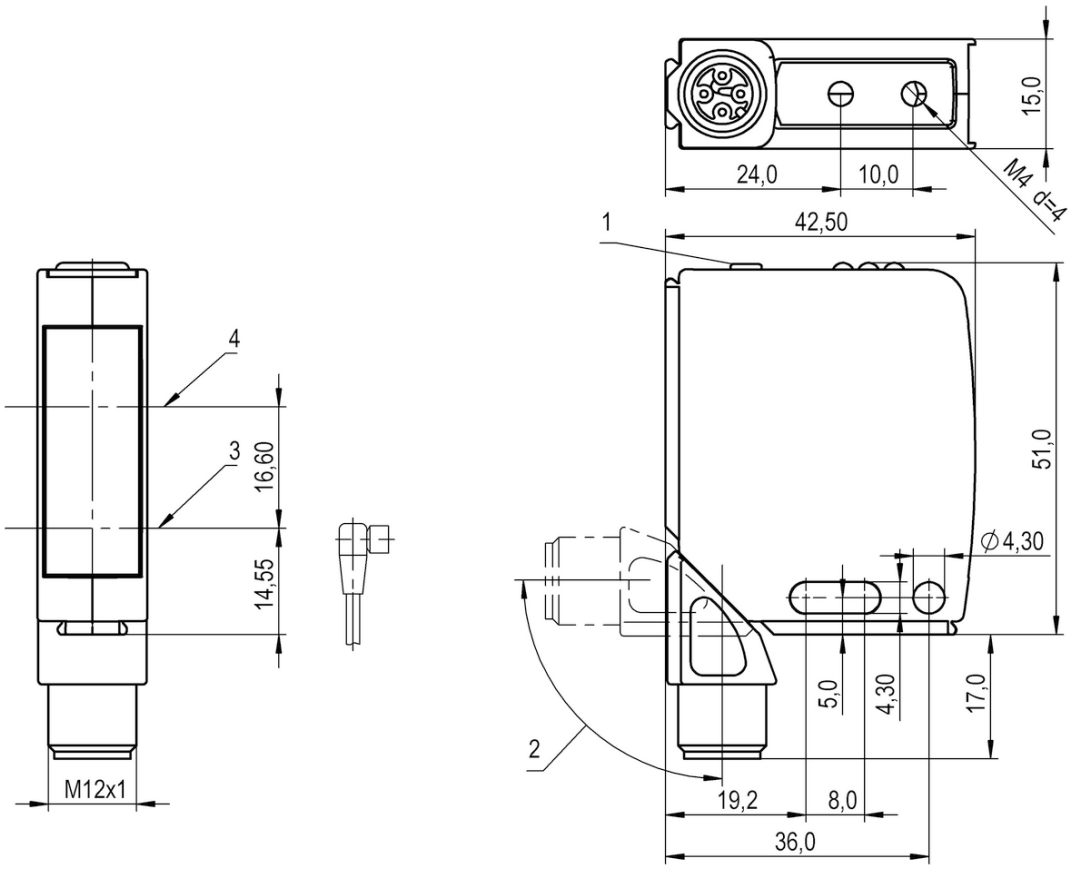

1) Display and control panel, 2) rotatable 270°, 3) Optical axis emitter, 4) Optical axis receiver

BOD002L

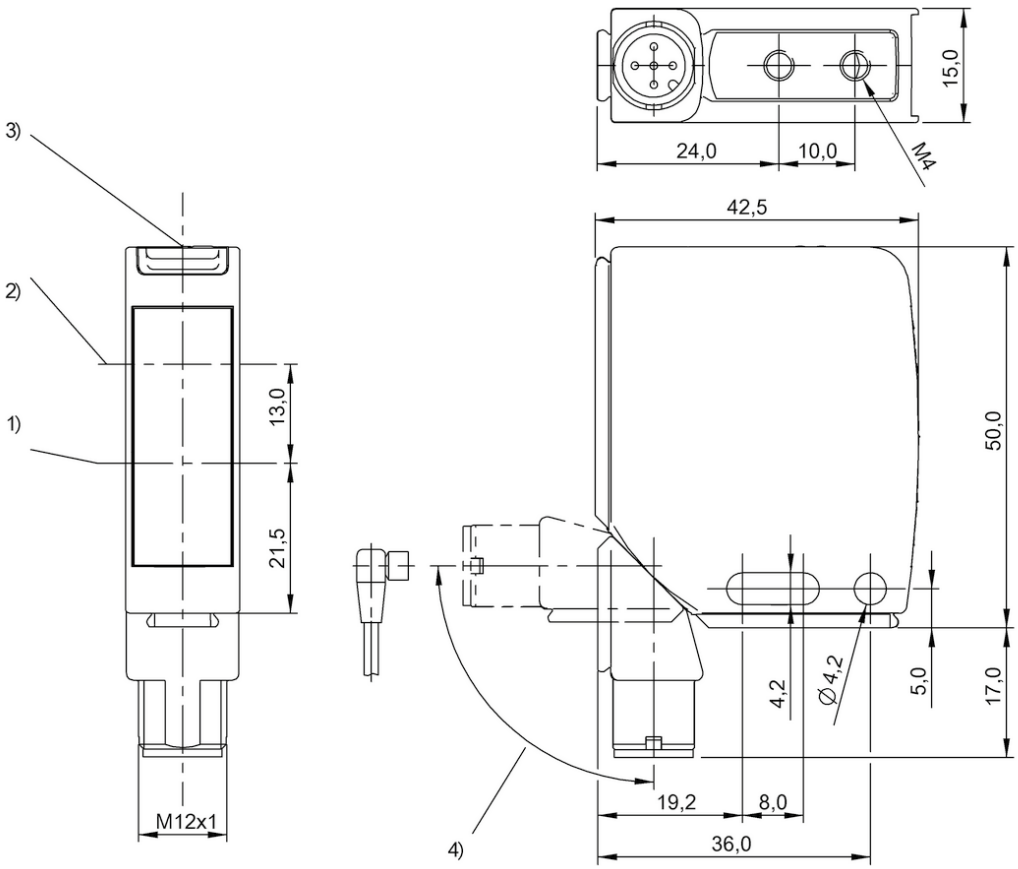

1) Optical axis receiver, 2) Optical axis emitter, 3) Display and control panel, 4) rotatable 270°

BOD000L, BOD000M, BOD000N, BOD000P, BOD000R, BOD000T

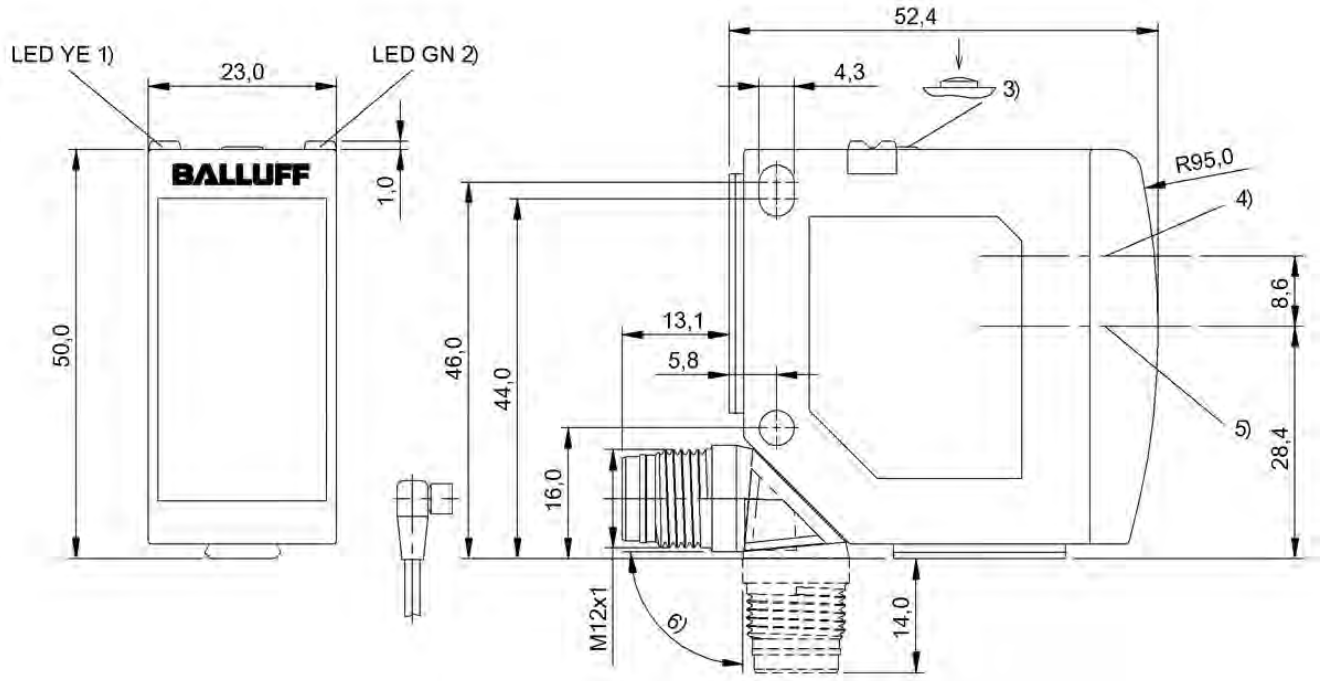

1) Output function, 2) Operating voltage, 3) Teach-In button, 4) Optical axis emitter, 5) Optical axis receiver, 6) rotatable 270°

BOD0020

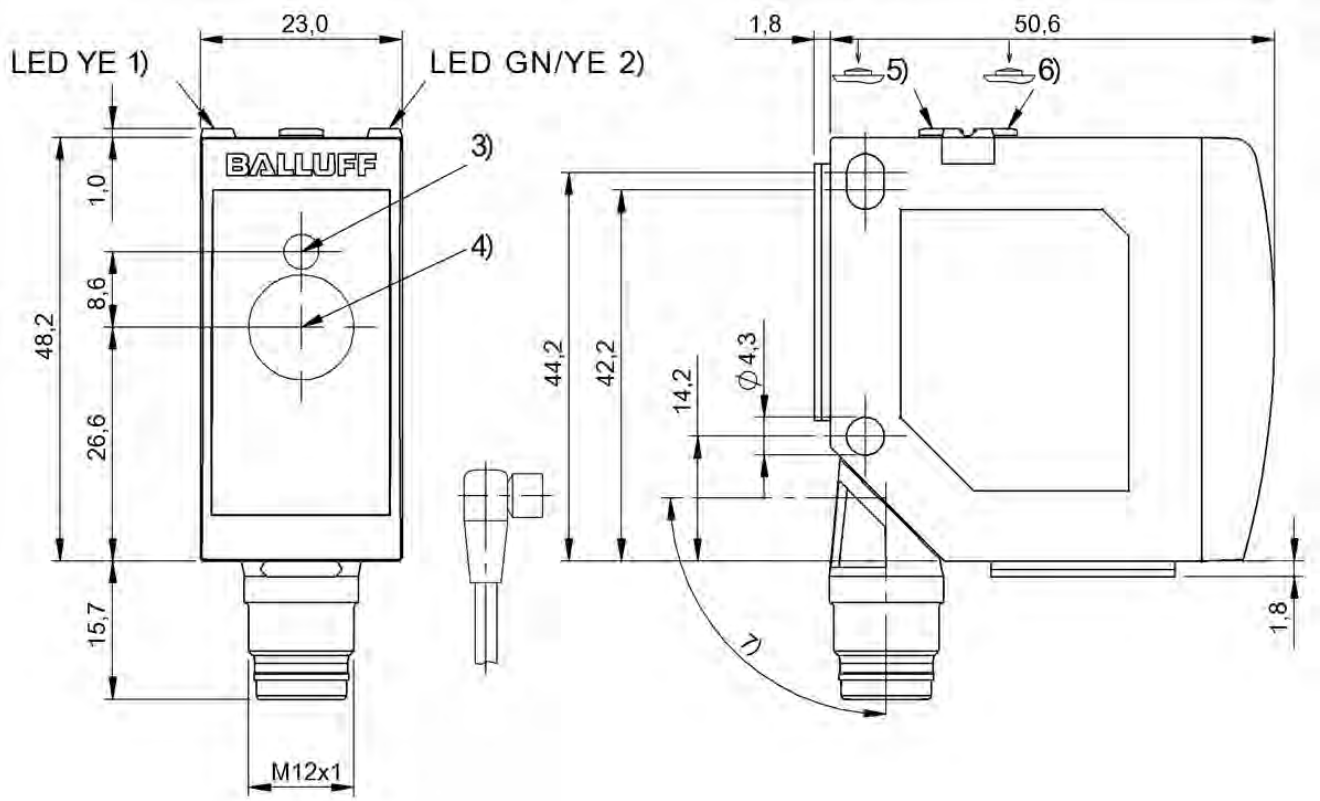

1) Output function, 2) Power/Analog output, 3) Optical axis emitter, 4) Optical axis receiver, 5) Teach-In switching output, 6) Teach-in Analog output, 7) rotatable 270°

BOD001N, BOD001P

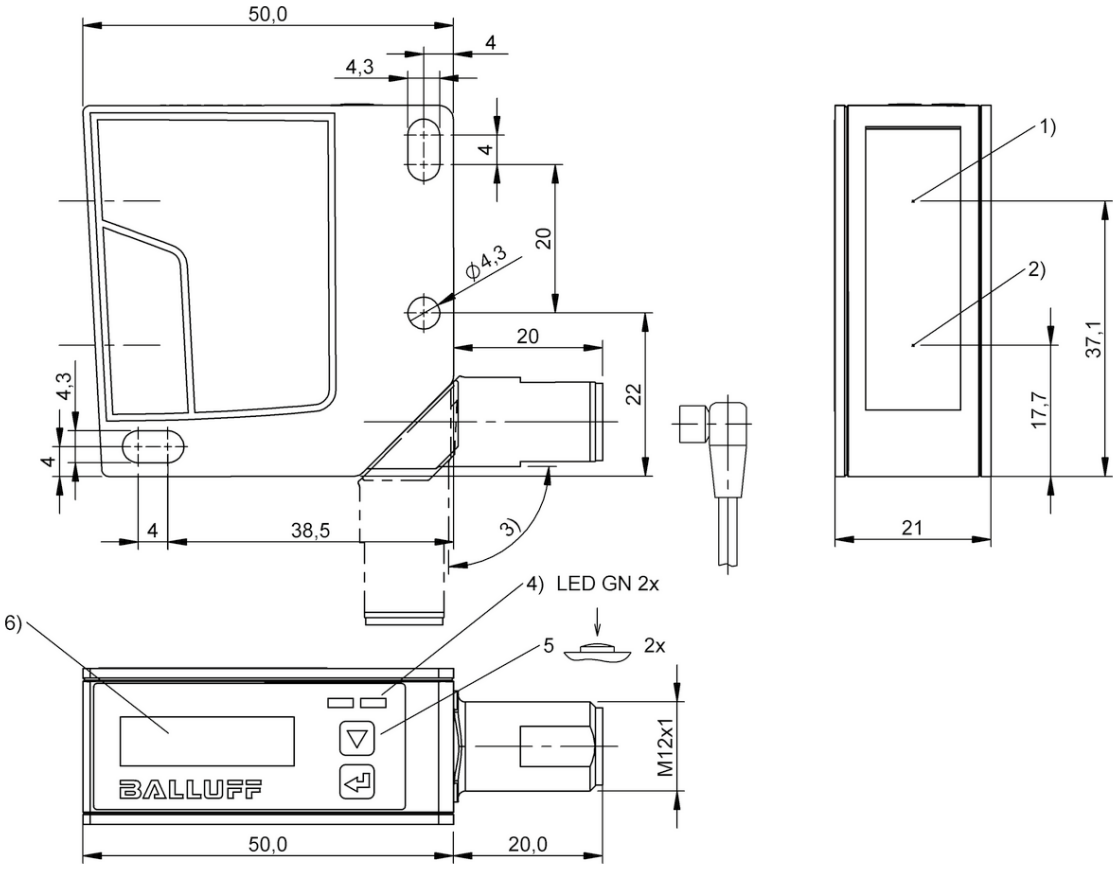

1) Optical axis emitter, 2) Optical axis receiver, 3) rotatable 180°, 4) LED green, 5) Operating button, 6) OLED Display

BOD002M, BOD002N

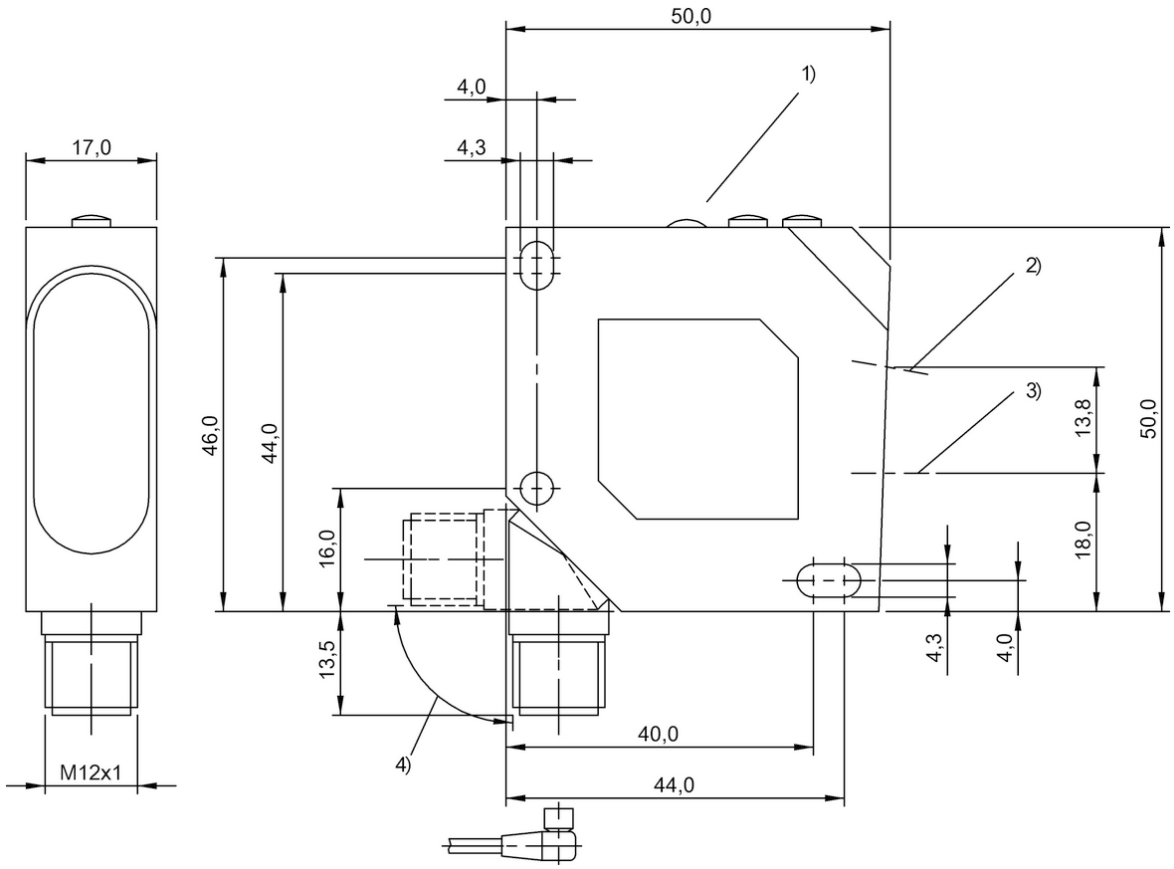

1) Display and control panel, 2) Optical axis receiver, 3) Optical axis emitter, 4) rotatable 270°

BOD0002, BOD0004

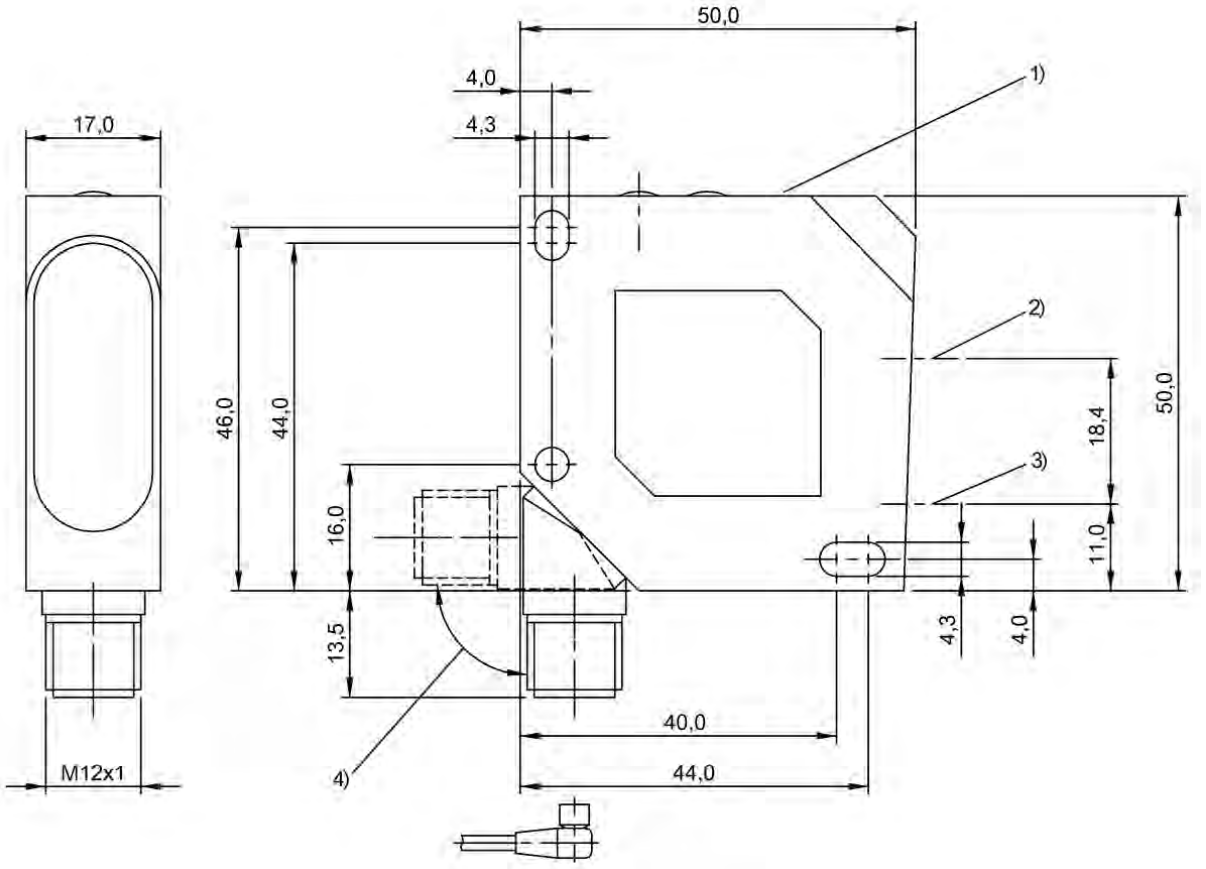

1) Display and control panel, 2) Optical axis emitter, 3) Optical axis receiver, 4) rotatable 270°

BOD0005, BOD0007, BOD000C

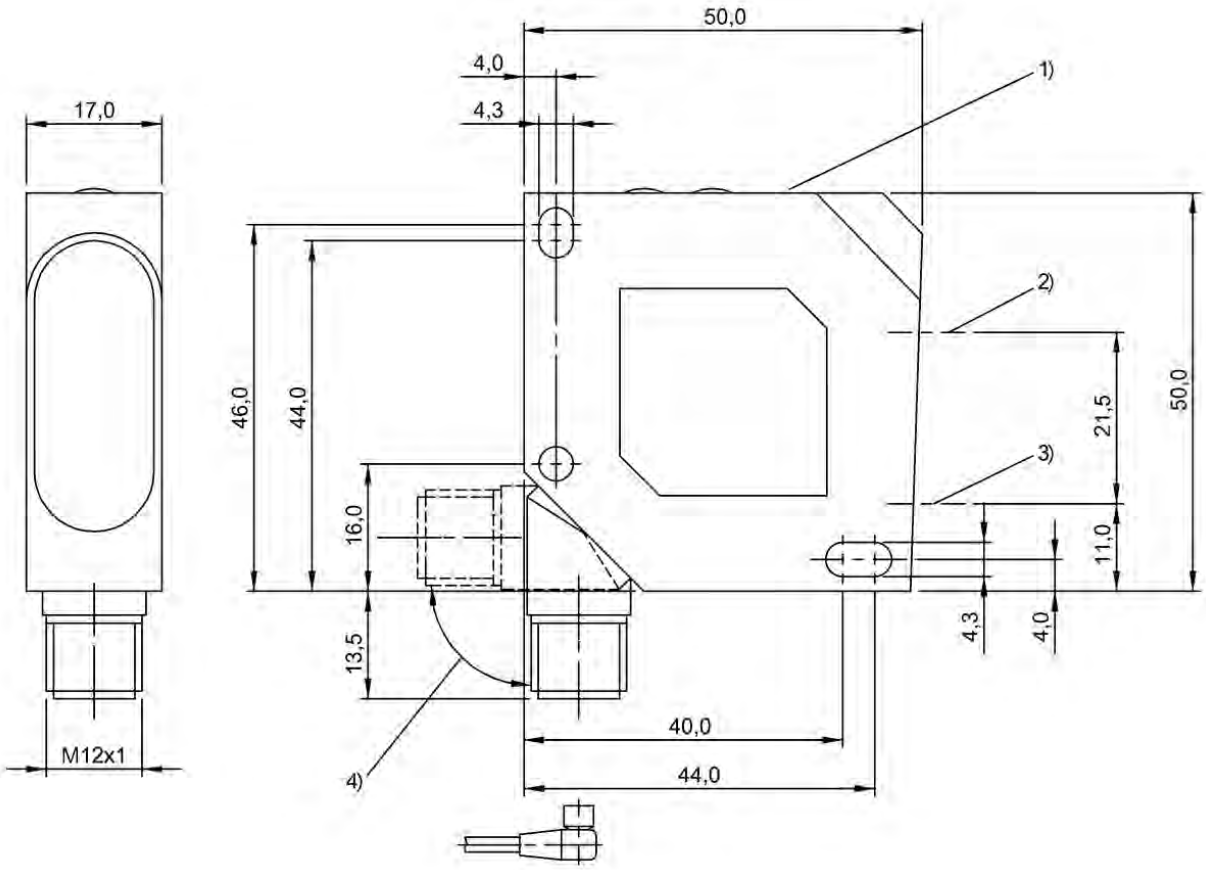

1) Display and control panel, 2) Optical axis emitter, 3) Optical axis receiver, 4) rotatable 270°

BOD0006, BOD0008, BOD000E

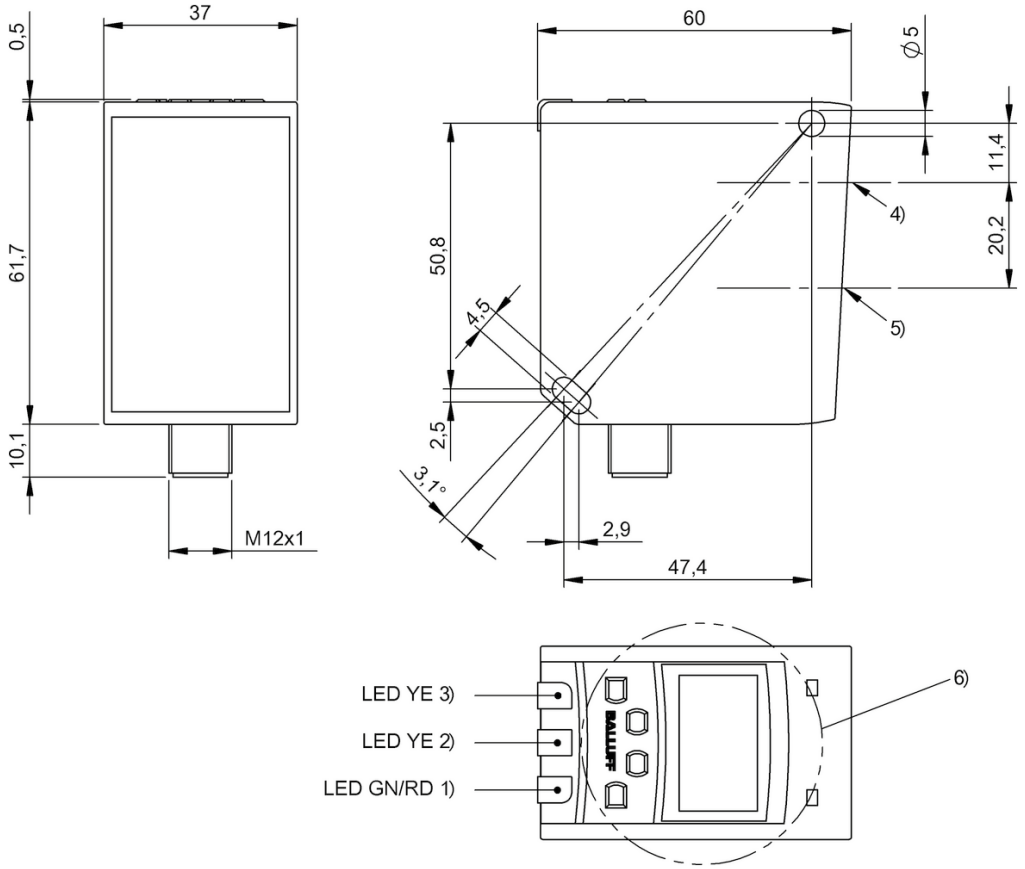

1) Operating voltage/Error, 2) Switchpoint Q2, 3) Switchpoint Q1, 4) Optical axis emitter, 5) Optical axis receiver, 6) Display and keypad

BOD001Y

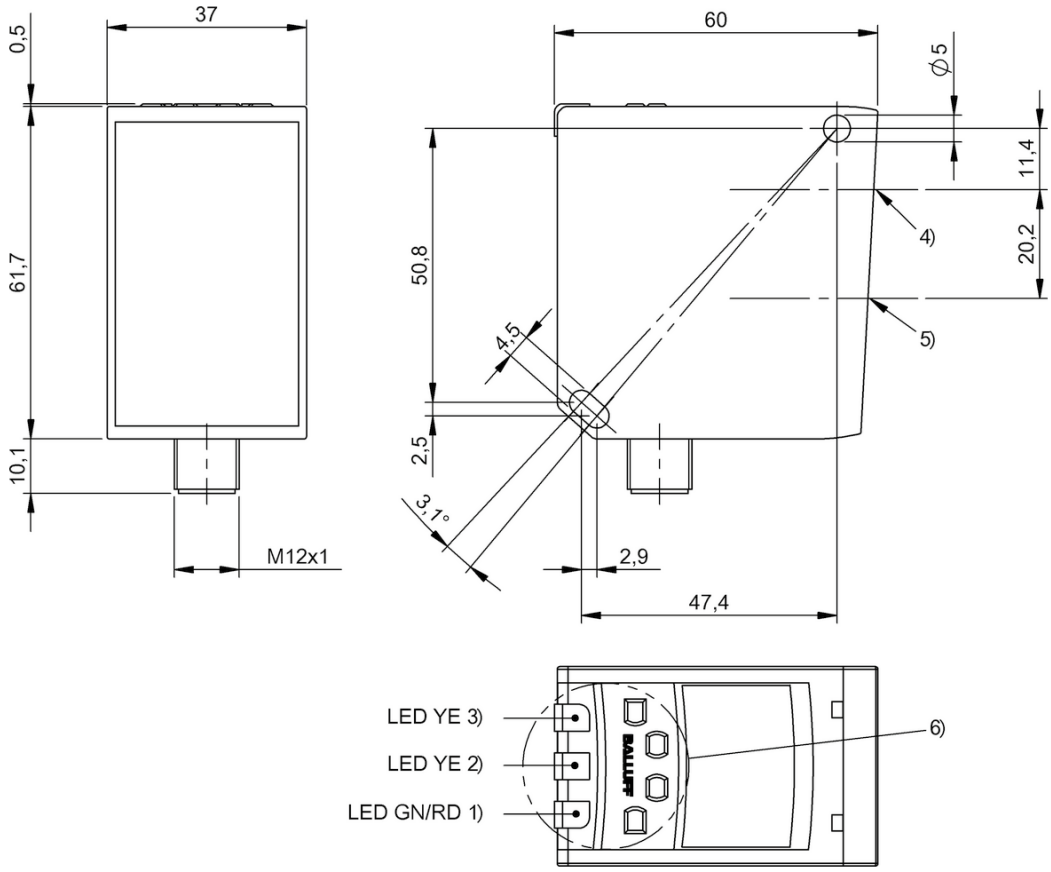

1) Operating voltage/Error, 2) Switchpoint Q2, 3) Switchpoint Q1, 4) Optical axis emitter, 5) Optical axis receiver, 6) Display and control panel

BOD001U, BOD001W

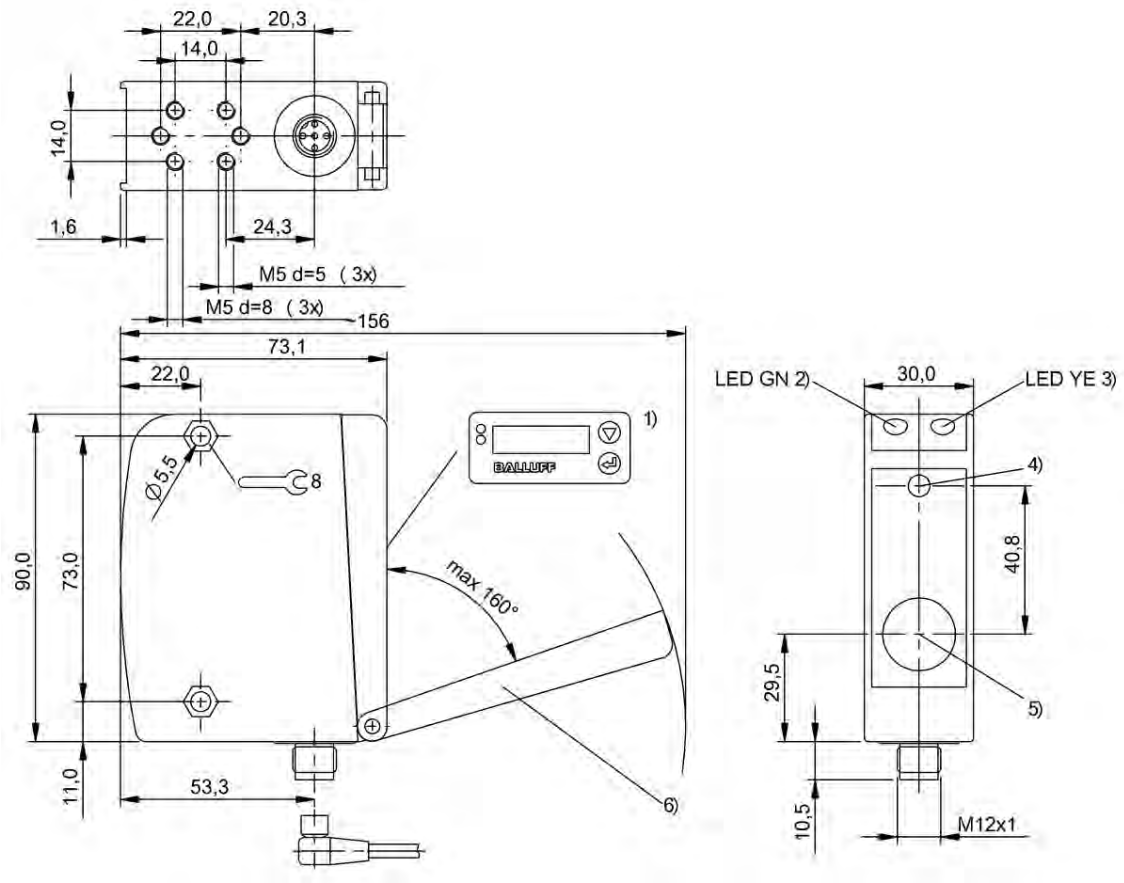

1) Display and keypad, 2) Operating voltage, 3) Output function, 4) Optical axis emitter, 5) Optical axis receiver, 6) Removable cover

BOD001J, BOD001E, BOD001K, BOD001F

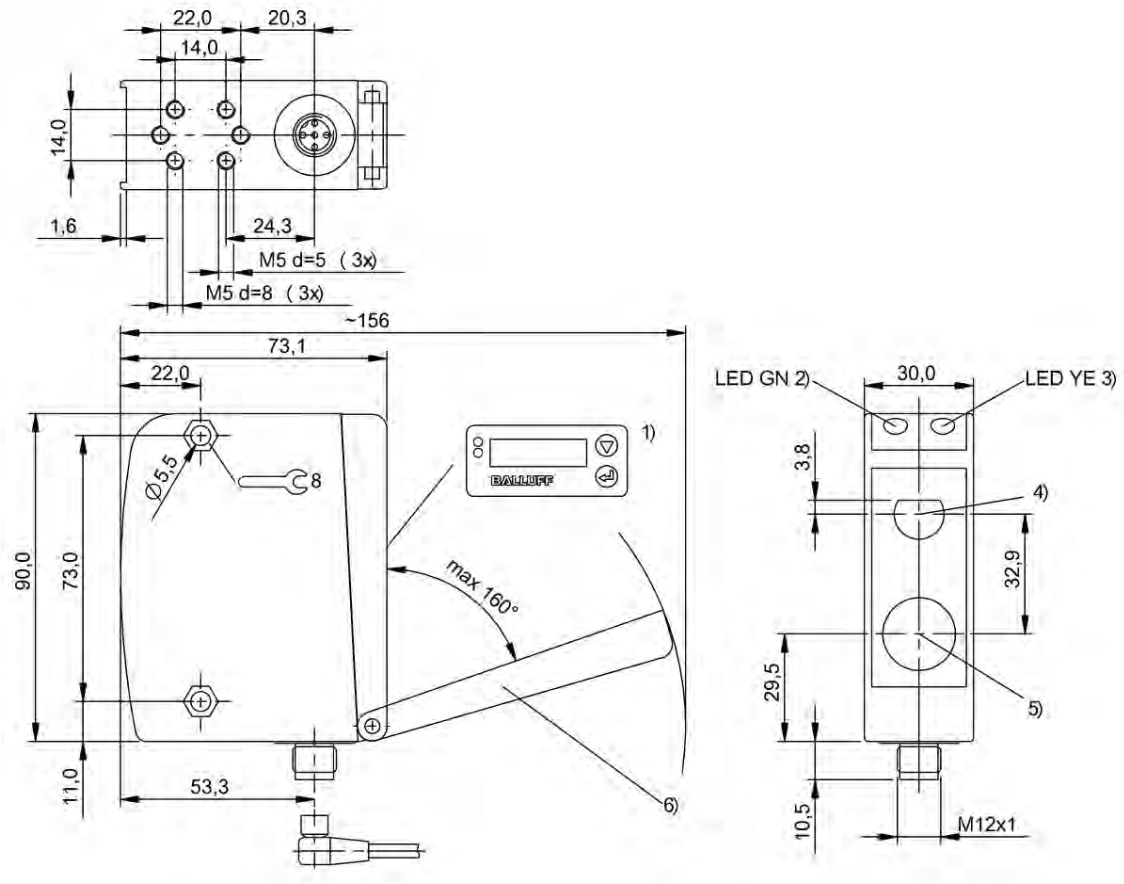

1) Display and keypad, 2) Operating voltage, 3) Output function, 4) Optical axis emitter, 5) Optical axis receiver, 6) Removable cover

BOD001H, BOD001C

Sure position detection even at high speeds

MAGNETIC FIELD SENSORS

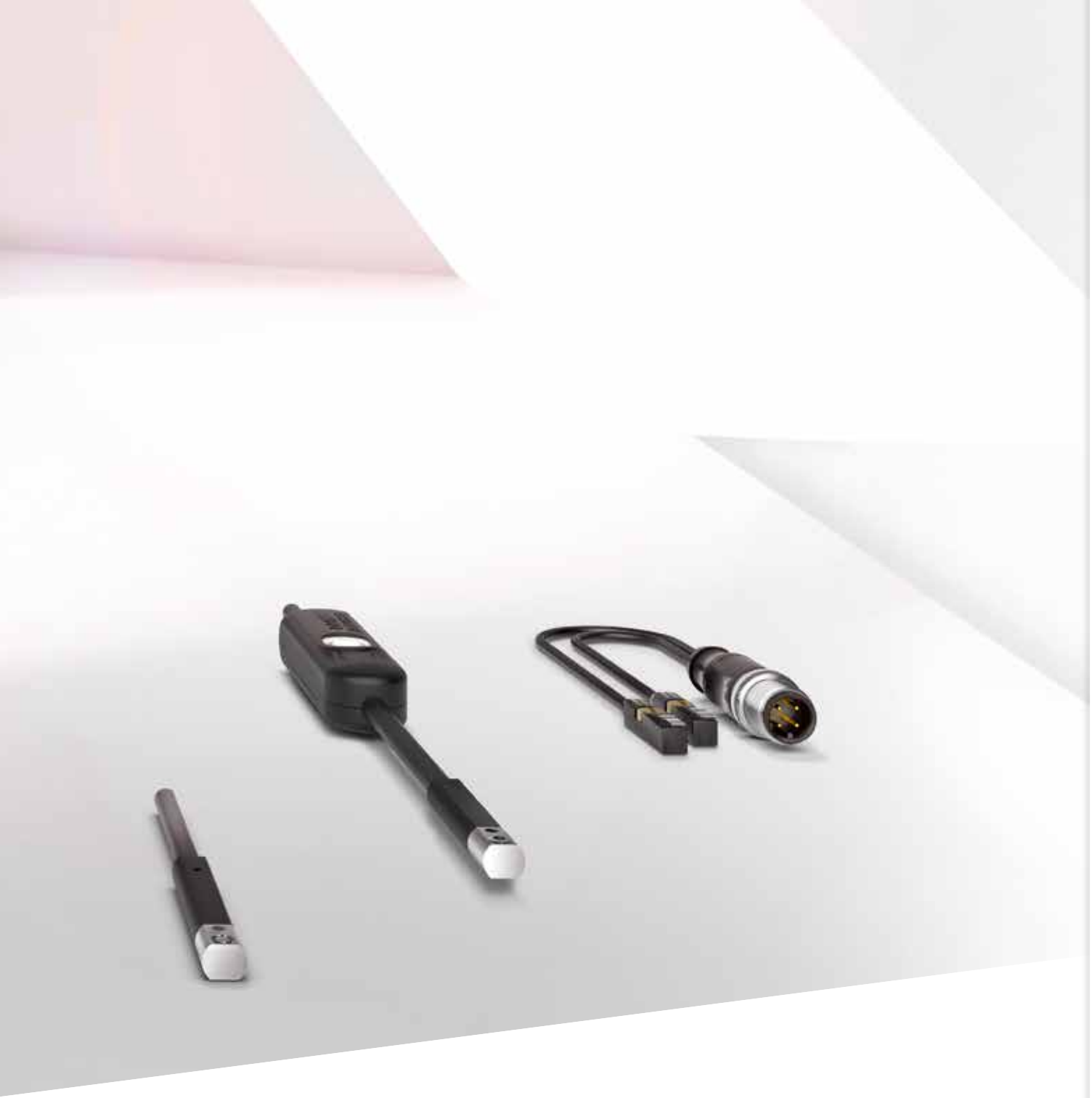

Our magnetic field sensors are used chiefly on cylinders and grippers for monitoring the piston position. The sensor thus recognizes the field of the magnet integrated into the piston through the actuator wall even at high travel speeds.

With their non-contact position detection the magnetic field sensors from Balluff work absolutely reliably and wear-free: no contact burn, no bouncing, just clean switching points.

The most important benefits

- Contact-free and therefore wear-free
- No double switching points
- Reliable even at high travel speeds

	BMP0007 BMP 01-EL1PP21A-0032-00-P00,5-S75	
Measuring range	32 mm	
Dimension	17.5 x 9.6 x 42 mm	
Analog output	Analog, voltage/Analog, current selectable 0…10 V/4…20 mA	
Interface	IO-Link 1.1	
Resolution	≤ 1 µm (IO-Link), 12 bits (analog)	
Repeat accuracy	± 100 µm	
Non-linearity typ.	±250 µm	
Operating voltage Ub	15...30 VDC	
Connection	Cable with connector, M8x1-Male, 4-pin, 0.5 m, PUR	
Housing material	PA 12 Aluminum	
Ambient temperature	-25...85 °C	
IP rating	IP67	
Approval/Conformity	CE, cULus LISTED, IO-Link, WEEE, EAC	
Productview	Page 642	

	BMP000N BMP 01-EL1PP21A-0096-00-P00,5-S4	BMP0009 BMP 01-EL1PP21A-0160-00-P02	BMP000K BMP 01-EL1PP21A-0256-00-P00,5-S75
	96 mm	160 mm	256 mm
	17.5 x 9.6 x 106 mm	17.5 x 9.6 x 170 mm	17.5 x 9.6 x 266 mm
	Analog, voltage/Analog, current selectable 0…10 V/4…20 mA	Analog, voltage/Analog, current selectable 0…10 V/4…20 mA	Analog, voltage/Analog, current selectable 0…10 V/4…20 mA
	IO-Link 1.1	IO-Link 1.1	IO-Link 1.1
	≤ 1 µm (IO-Link), 12 bits (analog)	≤ 1 µm (IO-Link), 12 bits (analog)	≤ 1 µm (IO-Link), 12 bits (analog)
	± 100 µm	± 100 µm	± 100 µm
	±250 µm	±250 µm	±250 µm
	15...30 VDC	15...30 VDC	15...30 VDC
	Cable with connector, M12x1-Male, 4-pin, 0.5 m, PUR	Cable, 2 m, PUR	Cable with connector, M8x1-Male, 4-pin, 0.5 m, PUR
	PA 12 Aluminum	PA 12 Aluminum	PA 12 Aluminum
	-25...85 °C	-25...85 °C	-25...85 °C
	IP67	IP67	IP67
	CE, cULus LISTED, IO-Link, WEEE, EAC	CE, cULus LISTED, IO-Link, WEEE, EAC	CE, cULus LISTED, IO-Link, WEEE, EAC
	Page 642	Page 643	Page 643

Do you need more details? Our Product Finder at www.balluff.com provides you with product-specific information, including technical drawings, data sheets, user guides and more for each individual product. All items are available for download.

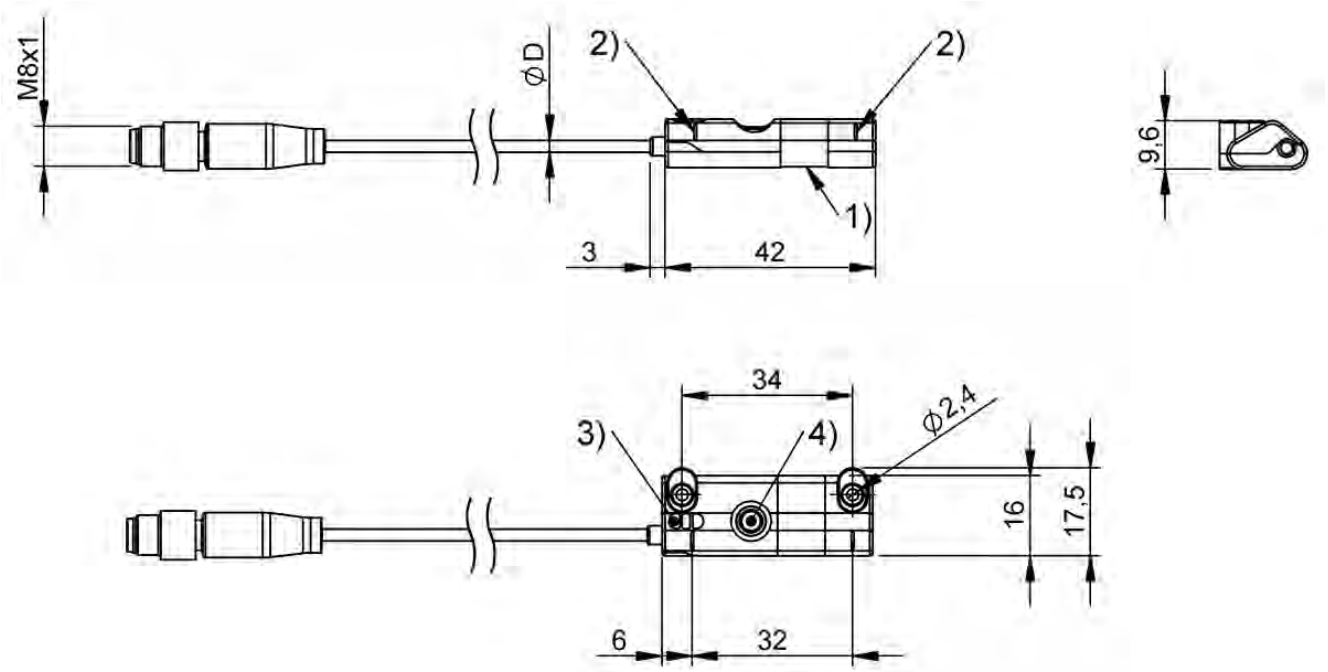

1) Sensing surface, 2) Notch, 3) LED function indicator, 4) Button

BMP0007

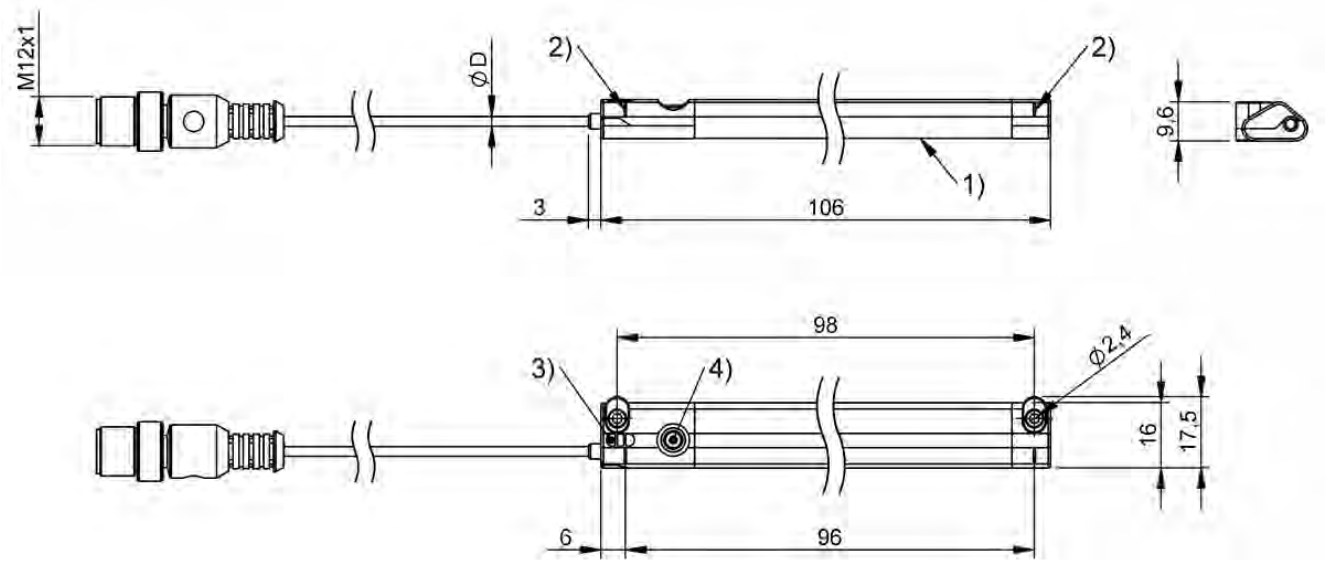

1) Sensing surface, 2) Notch, 3) LED function indicator, 4) Button

BMP000N

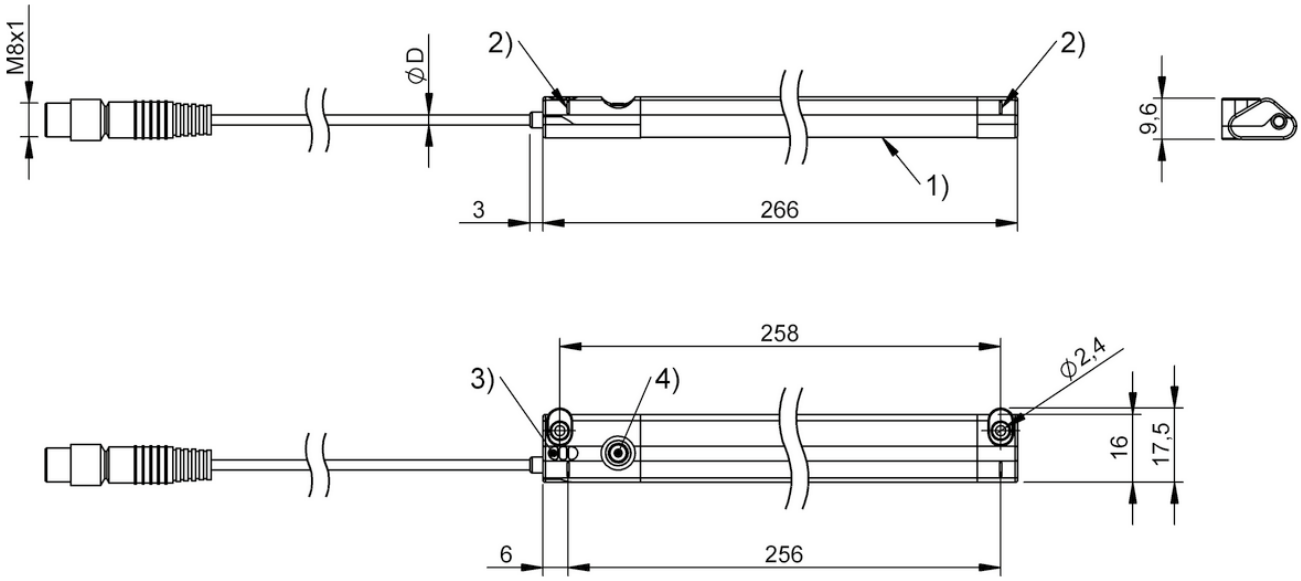

1) Sensing surface, 2) Notch, 3) LED function indicator, 4) Button

BMP000K

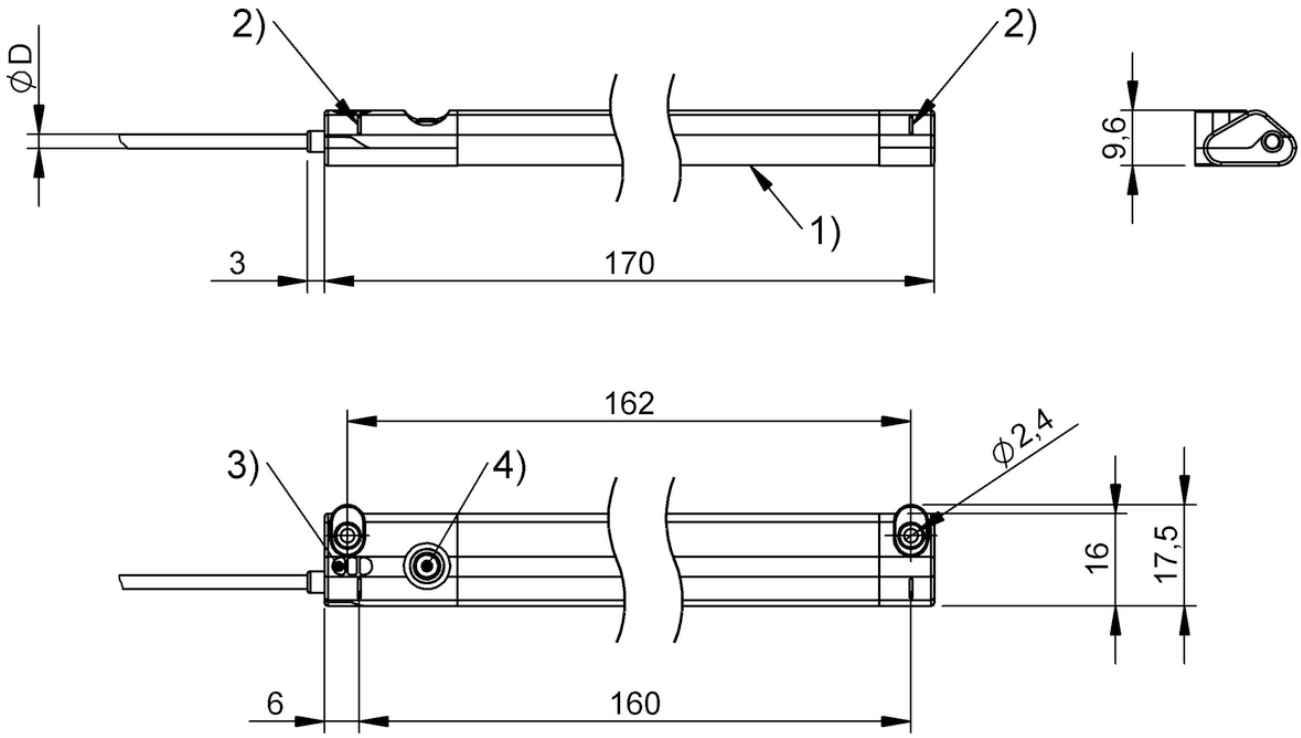

1) Sensing surface, 2) Notch, 3) LED function indicator, 4) Button

BMP0009

	BMF00N2 BMF 415KW-HAKKI-W-5-S0-02	BMF00N3 BMF 415KW-HAPS-W-5-S0-02	BMF00NL BMF 415KW-HAKKI-W-5-P0-S4-00,3
Dimension	5 x 6.4 x 34 mm	5 x 6.4 x 34 mm	5 x 6.4 x 34 mm
Connection	—	—	M12x1-Male, 4-pin, A-coded
Cable	Silicone welding spark resistant black, 2 m	Silicone welding spark resistant black, 2 m	TPU welding spark resistant black, 300 mm
Application	Pneumatic cylinder with T-slot. For dimensions, see sketch in product view., Welding area	Pneumatic cylinder with T-slot. For dimensions, see sketch in product view., Welding area	Pneumatic cylinder with T-slot. For dimensions, see sketch in product view., Welding area
Mounting	can be installed in T-slot from above	can be installed in T-slot from above	can be installed in T-slot from above
Teach function	—	—	—
Housing material	PA 12	PA 12	PA 12
Interface	IO-Link 1.1	—	IO-Link 1.1
Switching output	IO configurable NO/NC	PNP normally open (NO)	IO configurable NO/NC
Switching frequency	—	—	—
Operating voltage Ub	18...30 VDC	10...30 VDC	18...30 VDC
Ambient temperature	0...80 °C	0...80 °C	0...80 °C
Magnetic field immune	—	—	—
IP rating	IP67	IP67	IP67
Approval/Conformity	UL Listed, CE, RoHS, WEEE, IO-Link, EAC	CE, cULus, RoHS, WEEE, EAC	CE, cULus, RoHS, WEEE, IO-Link, EAC
Ex category	—	—	—
Productview	Page 648	Page 648	Page 648

	BMF00MU BMF 415KW-HAKKI-W-5-P3-S75-00,3	BMF00NM BMF 415KW-HAPS-W-5-P0-S4-00,3	BMF00MW BMF 415KW-HAPS-W-5-P3-S49-00,3	BMF00L6 BMF 235K-H-PS-C-A2-S75-00,3	BMF00C6 BMF 235K-P0-C-2A-SA2-S49-00,3
	5 x 6.4 x 34 mm	5 x 6.4 x 34 mm	5 x 6.4 x 34 mm	23.5 x 6.2 x 5 mm	23.5 x 5 x 5.5 mm
	M8x1-Male, 4-pin, A-coded	M12x1-Male, 3-pin, A-coded	M8x1-Male, 3-pin, A-coded	M8x1-Male, 4-pin	M8x1-Male, 3-pin
	TPU welding spark resistant orange, 300 mm	TPU welding spark resistant black, 300 mm	TPU welding spark resistant orange, 300 mm	PUR, 0.30 m	PUR, 0.3 m
	Pneumatic cylinder with T-slot. For dimensions, see sketch in product view., Welding area	Pneumatic cylinder with T-slot. For dimensions, see sketch in product view., Welding area	Pneumatic cylinder with T-slot. For dimensions, see sketch in product view., Welding area	Pneumatic cylinder with T-slot. For dimensions, see sketch in product view.	Pneumatic cylinder with T-slot. For dimensions, see sketch in product view.
	can be installed in T-slot from above	can be installed in T-slot from above	can be installed in T-slot from above	can be installed in T-slot from above	can be installed in T-slot from above
	—	—	—	2 switching points	—
	PA 12	PA 12	PA 12	PA 12	PA 12
	IO-Link 1.1	—	—	—	—
	IO configurable NO/NC	PNP normally open (NO)	PNP normally open (NO)	PNP normally open (NO)	PNP normally closed (NC)
	—	—	—	—	3000 Hz
	18...30 VDC	10...30 VDC	10...30 VDC	10...30 VDC	10...30 VDC
	0...80 °C	0...80 °C	0...80 °C	-25...80 °C	-25...85 °C
	—	—	—	—	—
	IP67	IP67	IP67	IP67	IP67
	CE, cULus, RoHS, WEEE, IO-Link, EAC	CE, cULus, RoHS, WEEE, EAC	CE, cULus, RoHS, WEEE, EAC	CE, cULus, EAC, WEEE	CE, cULus, EAC, WEEE
	—	—	—	—	—
	Page 648	Page 648	Page 648	Page 648	Page 648

	BMF00C5 BMF 235K-PS-C-2A-SA2-S4-00,3	BMF00C4 BMF 235K-PS-C-2A-SA2-S49-00,3	BMF00C9 BMF 235K-PS-C-2A-SA95-S4-00,3
Dimension	23.5 x 5 x 5.5 mm	23.5 x 5 x 5.5 mm	23.5 x 5 x 5.5 mm
Connection	M12x1-Male, 4-pin, A-coded	M8x1-Male, 3-pin	M12x1-Male, 4-pin, A-coded
Cable	PUR, 0.3 m	PUR, 0.3 m	PUR, 0.3 m
Application	Pneumatic cylinder with T-slot. For dimensions, see sketch in product view.	Pneumatic cylinder with T-slot. For dimensions, see sketch in product view.	Pneumatic cylinder with T-slot. For dimensions, see sketch in product view.
Mounting	can be installed in T-slot from above	can be installed in T-slot from above	can be installed in T-slot from above
Teach function	—	—	—
Housing material	PA 12	PA 12	PA 12
Interface	—	—	—
Switching output	PNP normally open (NO)	PNP normally open (NO)	PNP normally open (NO)
Switching frequency	3000 Hz	3000 Hz	3000 Hz
Operating voltage Ub	10...30 VDC	10...30 VDC	10...30 VDC
Ambient temperature	-25...85 °C	-25...85 °C	-25...85 °C
Magnetic field immune	—	—	—
IP rating	IP67	IP67	IP67
Approval/Conformity	CE, cULus, EAC, WEEE	cULus, CE, WEEE, EAC	CE, cULus, EAC, WEEE
Ex category	—	—	—
Productview	Page 648	Page 648	Page 648

	BMF00CA BMF 235K-PS-C-2A-SA95-S75-00,3	BMF00AR BMF 235K-PS-C-2A-PU-02	BMF00M5 BMF 405KF-PS-C-2A-S4-00,3	BMF00LW BMF 405KF-PO-C-2A-EY-02	BMF00E4 BMF 255K-N-06-EEX
	23.5 x 5 x 5.5 mm	23.5 x 5 x 5.5 mm	5 x 5.4 x 27 mm	5 x 5.4 x 27 mm	25 x 5 x 5.1 mm
	M8x1-Male, 4-pin	—	M12x1-Male, 3-pin, A-coded	—	—
	PUR, 0.3 m	PUR, 2 m	TPE-V, 0.3 m	TPE-V, 2 m	PVC, 6 m
	Pneumatic cylinder with T-slot. For dimensions, see sketch in product view.	Pneumatic cylinder with T-slot. For dimensions, see sketch in product view.	—	—	Pneumatic cylinder with T-slot. For dimensions, see sketch in product view.
	can be installed in T-slot from above	can be installed in T-slot from above	—	—	can be installed in T-slot from above
	—	—	—	—	—
	PA 12	PA 12	PP	PP	PA
	—	—	—	—	NAMUR
	PNP normally open (NO)	PNP normally open (NO)	PNP normally open (NO)	PNP normally closed (NC)	—
	3000 Hz	3000 Hz	10000 Hz	10000 Hz	2000 Hz
	10...30 VDC	10...30 VDC	10...30 VDC	10...30 VDC	—
	-25...85 °C	-25...85 °C	-40...100 °C	-40...100 °C	-25...70 °C
	—	—	—	—	—
	IP67	IP67	IP67, IP68, IP69K	IP67, IP68, IP69K	IP67
	CE, cULus, EAC, WEEE	cULus, CE, WEEE, EAC	cULus, CE, Ecolab, RoHS, EAC, WEEE	cULus, CE, Ecolab, RoHS, EAC, WEEE	CE, EAC, ATEX, IECEx, WEEE
	—	—	—	—	ATEX: 1G (EPL Ga) ATEX: 1D (EPL Da)
	Page 649	Page 649	Page 649	Page 649	Page 649

Do you need more details? Our Product Finder at www.balluff.com provides you with product-specific information, including technical drawings, data sheets, user guides and more for each individual product. All items are available for download.

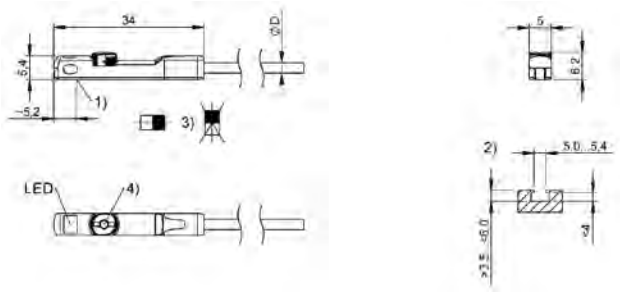

1) Position sensor element, 2) see remarks, 3) see remarks, 4) see remarks

BMF00N2, BMF00N3

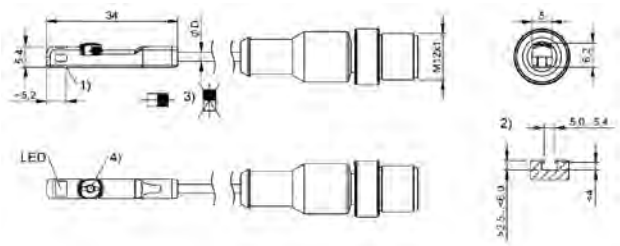

1) Position sensor element, 2) see remarks, 3) see remarks, 4) see remarks

BMF00NL, BMF00NM

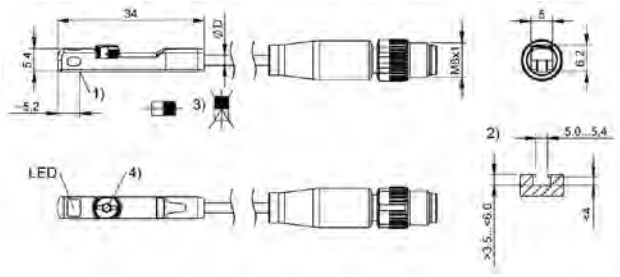

1) Position sensor element, 2) see remarks, 3) see remarks, 4) see remarks

BMF00MU

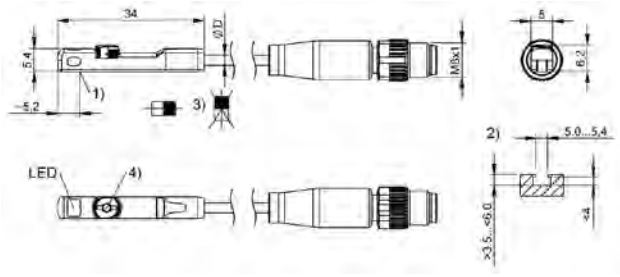

1) Position sensor element, 2) see remarks, 3) see remarks, 4) see remarks

BMF00MW

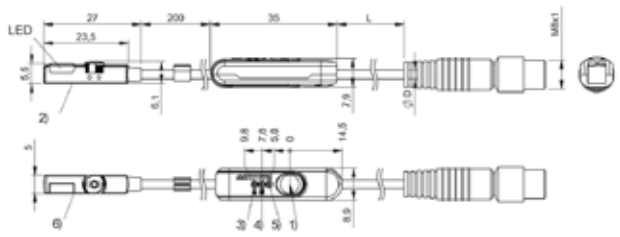

1) Teach-In button, 2) Sensing surface, 3) Output 1 active, 4) Output 2 active, 5) LED Power, 6) Null point

BMF00L6

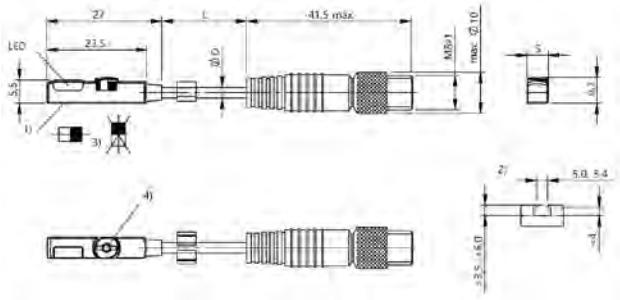

1) Sensing surface, 2) see remarks, 3) see remarks, 4) see remarks

BMF00C6, BMF00C4

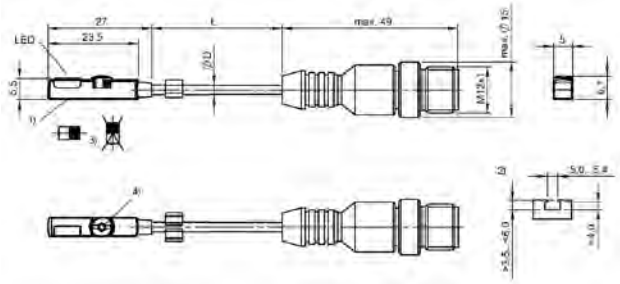

1) Sensing surface, 2) see remarks, 3) see remarks, 4) see remarks

BMF00C5

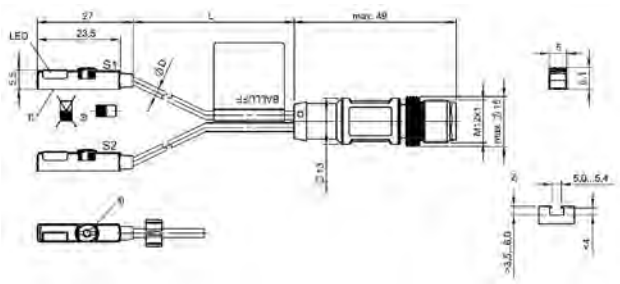

1) Sensing surface, 2) see remarks, 3) see remarks, 4) see remarks

BMF00C9

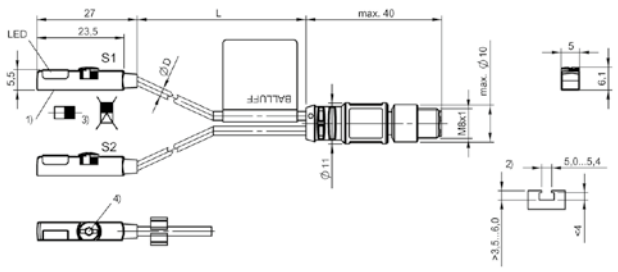

1) Sensing surface, 2) see remarks, 3) see remarks, 4) see remarks

BMF00CA

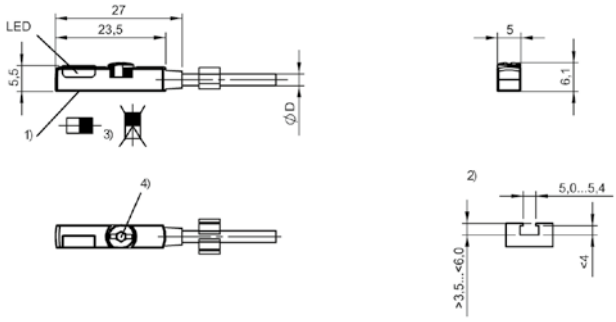

1) Sensing surface, 2) see remarks, 3) see remarks, 4) see remarks

BMF00AR

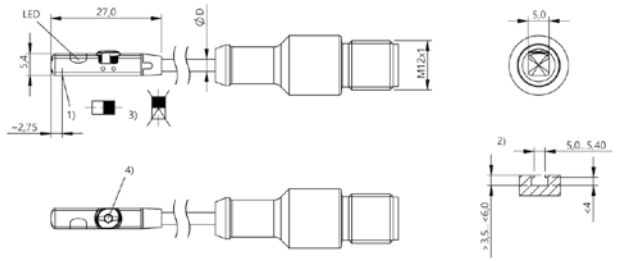

1) Position sensor element, 2) see remarks, 3) see remarks, 4) see remarks

BMF00M5

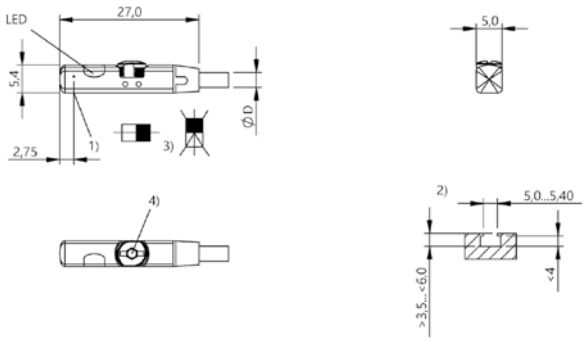

1) Position sensor element, 2) see remarks, 3) see remarks, 4) see remarks

BMF00LW

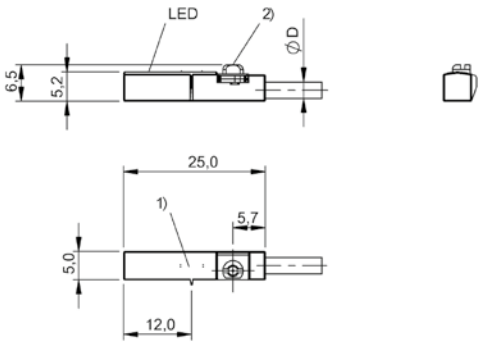

1) Sensing surface, 2) Mounting clamp

BMF00E4

Do you need more details? Our Product Finder at www.balluff.com provides you with product-specific information, including technical drawings, data sheets, user guides and more for each individual product. All items are available for download.

	BMF00JH BMF 203K-H-PS-C-A2-S75-00,3	BMF00JF BMF 203K-H-PS-C-A2-PU-02	
Dimension	20 x 2.9 x 3.6 mm	20 x 2.9 x 3.6 mm	
Connection	M8x1-Male, 4-pin	—	
Cable	PUR, 0.3 m	PUR, 2 m	
Application	Pneumatic cylinder with C-slot. For dimensions, see sketch in product view.	Pneumatic cylinder with C-slot. For dimensions, see sketch in product view.	
Mounting	can be installed in C-slot from above	can be installed in C-slot from above	
Teach function	2 switching points	2 switching points	
Housing material	PA 12	PA 12	
Interface	—	—	
Switching output	PNP normally open (NO)	PNP normally open (NO)	
Switching frequency	15 Hz	15 Hz	
Operating voltage Ub	10...30 VDC	10...30 VDC	
Ambient temperature	-25...80 °C	-25...80 °C	
Magnetic field immune	—	—	
IP rating	IP67	IP67	
Approval/Conformity	CE, cULus, EAC, WEEE	CE, cULus, EAC, WEEE	
Ex category	—	—	
Productview	Page 654	Page 654	

	BMF00HF BMF 233K-PS-C-2A-SA2-S49-00,3	BMF00J2 BMF 233K-PS-C-2A-SA95-S4-00,3	BMF00J1 BMF 233K-PS-C-2A-SA95-S75-00,3	BMF00HA BMF 233K-PS-C-2A-PU-02
	24 x 2.9 x 3.6 mm	24 x 2.9 x 3.6 mm	24 x 2.9 x 3.6 mm	24 x 2.9 x 3.6 mm
	M8x1-Male, 3-pin	M12x1-Male, 4-pin, A-coded	M8x1-Male, 4-pin	—
	PUR, 0.3 m	PUR, 0.3 m	PUR, 0.3 m	PUR, 2 m
	Pneumatic cylinder with C-slot, e.g. Festo, Sommer, etc.	Pneumatic cylinder with C-slot, e.g. Festo, Sommer, etc.	Pneumatic cylinder with C-slot, e.g. Festo, Sommer, etc.	Pneumatic cylinder with C-slot, e.g. Festo, Sommer, etc.
	can be installed in C-slot from above	can be installed in C-slot from above	can be installed in C-slot from above	can be installed in C-slot from above
	—	—	—	—
	PA 12	PA 12	PA 12	PA 12
	—	—	—	—
	PNP normally open (NO)	PNP normally open (NO)	PNP normally open (NO)	PNP normally open (NO)
	3000 Hz	3000 Hz	3000 Hz	3000 Hz
	10...30 VDC	10...30 VDC	10...30 VDC	10...30 VDC
	-25...85 °C	-25...85 °C	-25...85 °C	-25...85 °C
	—	—	—	—
	IP67	IP67	IP67	IP67
	cULus, CE, WEEE, EAC	cULus, CE, WEEE, EAC	cULus, CE, WEEE, EAC	cULus, CE, WEEE, EAC
	—	—	—	—
	Page 654	Page 654	Page 654	Page 654

	BMF00ER BMF 243K-PS-C-2A-SA2-S4-00,3	BMF00EL BMF 243K-PS-C-2A-SA2-S49-00,3	
Dimension	24 x 3 x 3.75 mm	24 x 3 x 3.75 mm	
Connection	M12x1-Male, 4-pin, A-coded	M8x1-Male, 3-pin	
Cable	PUR, 0.3 m	PUR, 0.3 m	
Application	Pneumatic cylinder with C-slot, e.g. SMC, Festo*, Schunk, Sommer, Gimatic (*not suitable for Festo Series ADVC and AEVC)	Pneumatic cylinder with C-slot, e.g. SMC, Festo*, Schunk, Sommer, Gimatic (*not suitable for Festo Series ADVC and AEVC)	
Mounting	can be installed in C-slot from above	can be installed in C-slot from above	
Teach function	—	—	
Housing material	PA 12	PA 12	
Interface	—	—	
Switching output	PNP normally open (NO)	PNP normally open (NO)	
Switching frequency	3000 Hz	3000 Hz	
Operating voltage Ub	10...30 VDC	10...30 VDC	
Ambient temperature	-25...85 °C	-25...85 °C	
Magnetic field immune	—	—	
IP rating	IP67	IP67	
Approval/Conformity	cULus, CE, WEEE, EAC	cULus, CE, WEEE, EAC	
Ex category	—	—	
Productview	Page 654	Page 654	

	BMF00F9 BMF 243K-PS-C-2A-SA95-S4-00,3	BMF00ET BMF 243K-PS-C-2A-SA95-S75-00,3	BMF00EF BMF 243K-PS-C-2A-PU-02	
	24 x 3 x 3.75 mm	24 x 3 x 3.75 mm	24 x 3 x 3.75 mm	
	M12x1-Male, 4-pin, A-coded	M8x1-Male, 4-pin	—	
	PUR, 0.3 m	PUR, 0.3 m	PUR, 2 m	
	Pneumatic cylinder with C-slot, e.g. SMC, Festo*, Schunk, Sommer, Gimatic (*not suitable for Festo Series ADVC and AEVC)	Pneumatic cylinder with C-slot, e.g. SMC, Festo*, Schunk, Sommer, Gimatic (*not suitable for Festo Series ADVC and AEVC)	Pneumatic cylinder with C-slot, e.g. SMC, Festo*, Schunk, Sommer, Gimatic (*not suitable for Festo Series ADVC and AEVC)	
	can be installed in C-slot from above	can be installed in C-slot from above	can be installed in C-slot from above	
	—	—	—	
	PA 12	PA 12	PA 12	
	—	—	—	
	PNP normally open (NO)	PNP normally open (NO)	PNP normally open (NO)	
	3000 Hz	3000 Hz	3000 Hz	
	10...30 VDC	10...30 VDC	10...30 VDC	
	-25...85 °C	-25...85 °C	-25...85 °C	
	—	—	—	
	IP67	IP67	IP67	
	CE, cULus, EAC, WEEE	CE, cULus, EAC, WEEE	cULus, CE, WEEE, EAC	
	—	—	—	
	Page 655	Page 655	Page 655	

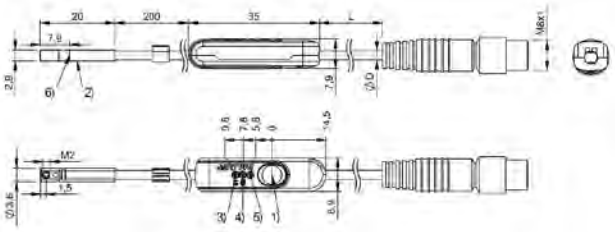

1) Teach-In button, 2) Sensing surface, 3) Output 1 active, 4) Output 2 active, 5) LED Power, 6) Null point

BMF00JH

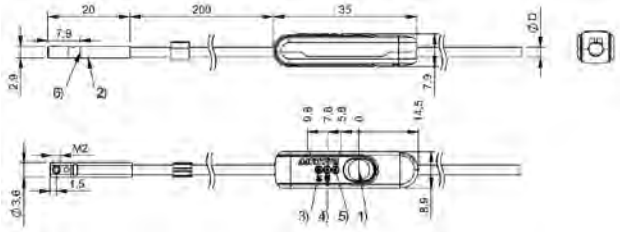

1) Teach-In button, 2) Sensing surface, 3) Output 1 active, 4) Output 2 active, 5) LED Power, 6) Null point

BMF00JF

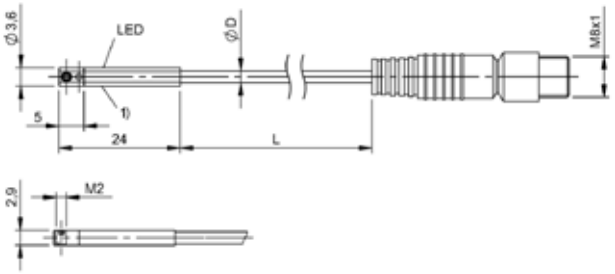

1) Sensing surface

BMF00HF

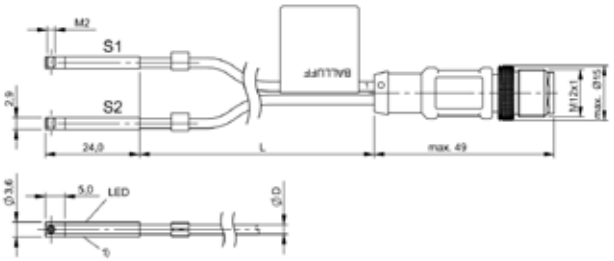

1) Sensing surface

BMF00J2

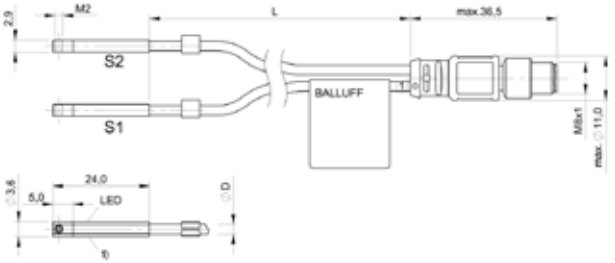

1) Sensing surface

BMF00J1

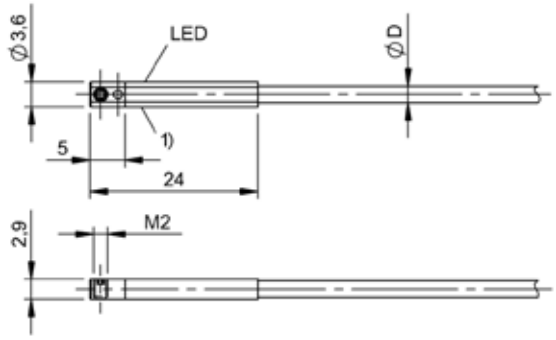

1) Sensing surface

BMF00HA

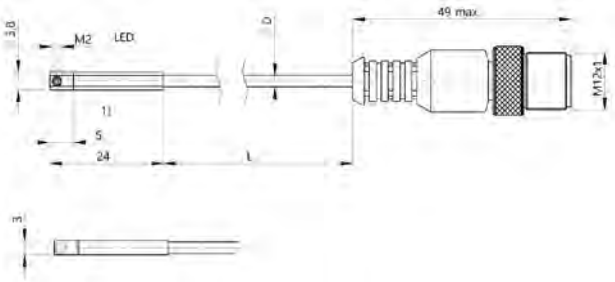

1) Sensing surface

BMF00ER

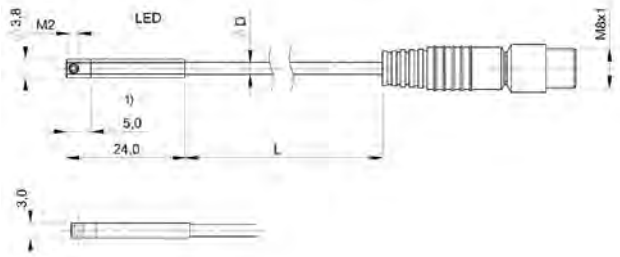

1) Sensing surface

BMF00EL

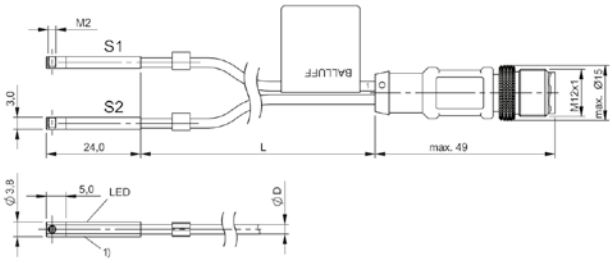

1) Sensing surface

BMF00F9

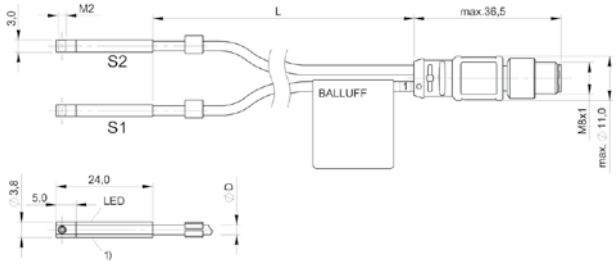

1) Sensing surface

BMF00ET

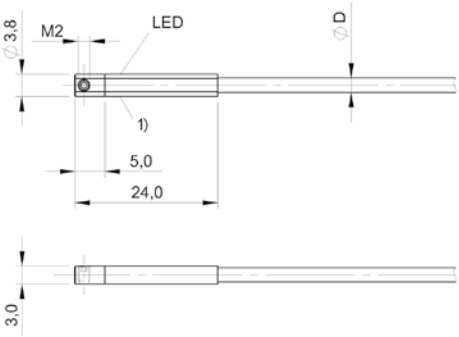

1) Sensing surface

BMF00EF

	BMF001L BMF 103K-PS-C-2A-SA2-S49-00,3	BMF001P BMF 103K-PS-C-2A-SA7-S49-00,3	BMF001R BMF 103K-PS-C-2A-SA95-S75-00,3
Dimension	9 x 4.8 x 16 mm	9 x 4.8 x 16 mm	9 x 4.8 x 16 mm
Connection	M8x1-Male, 3-pin	M8x1-Male, 3-pin	M8x1-Male, 4-pin
Cable	PUR, 0.3 m	PUR, 0.3 m	PUR, 0.3 m
Application	Optimized response path especially suited for short-stroke cylinders.	radially magnetized magnets (Schunk)	Optimized response path especially suited for short-stroke cylinders.
Mounting	Mounting bracket BMF 103-HW*	Mounting bracket BMF 103-HW*	Mounting bracket BMF 103-HW*
Housing material	PBT	LCP	PBT
Interface	—	—	—
Switching output	PNP normally open (NO)	PNP normally open (NO)	PNP normally open (NO)
Switching frequency	30000 Hz	7000 Hz	30000 Hz
Operating voltage Ub	10...30 VDC	10...30 VDC	10...30 VDC
Ambient temperature	-25...85 °C	-25...85 °C	-25...85 °C
Magnetic field immune	—	—	—
IP rating	IP67	IP67	IP67
Approval/Conformity	cULus, CE, WEEE, EAC	CE, cULus, EAC, WEEE	CE, cULus, EAC, WEEE
Productview	Page 660	Page 660	Page 660

	BMF001E BMF 103K-PS-C-2A-PU-02	BMF0043 BMF 303K-PS-C-2A-SA2-S49-00,3	BMF004C BMF 303K-PS-C-2A-SA7-S49-00,3	BMF004E BMF 303K-PS-C-2A-SA95-S4-00,3	BMF004F BMF 303K-PS-C-2A-SA95-S75-00,3
	9 x 4.8 x 16 mm	25.5 x 3 x 4.5 mm	25.5 x 3 x 4.5 mm	25.5 x 3 x 4.5 mm	25.5 x 3 x 4.5 mm
	—	M8x1-Male, 3-pin	M8x1-Male, 3-pin	M12x1-Male, 4-pin, A-coded	M8x1-Male, 4-pin
	PUR, 2 m	PUR, 0.3 m	PUR, 0.3 m	PUR, 0.3 m	PUR, 0.3 m
	Optimized response path especially suited for short-stroke cylinders.	miniaturized actuators	radially magnetized magnets (Schunk)	miniaturized actuators	miniaturized actuators
	Mounting bracket BMF 103-HW*	Mounting bracket BMF 303-HW*	Mounting bracket BMF 303-HW*	Mounting bracket BMF 303-HW*	Mounting bracket BMF 303-HW*
	PBT	LCP	LCP	LCP	LCP
	—	—	—	—	—
	PNP normally open (NO)	PNP normally open (NO)	PNP normally open (NO)	PNP normally open (NO)	PNP normally open (NO)
	30000 Hz	30000 Hz	7000 Hz	30000 Hz	30000 Hz
	10...30 VDC	10...30 VDC	10...30 VDC	10...30 VDC	10...30 VDC
	-25...85 °C	-25...85 °C	-25...85 °C	-25...85 °C	-25...85 °C
	—	—	—	—	—
	IP67	IP67	IP67	IP67	IP67
	cULus, CE, WEEE, EAC	cULus, CE, WEEE, EAC	CE, cULus, EAC, WEEE	CE, cULus, EAC, WEEE	CE, cULus, EAC, WEEE
	Page 660	Page 660	Page 660	Page 660	Page 660

	BMF003U BMF 303K-PS-C-2A-PU-02	BMF008F BMF 305M-PS-C-2-S49	BMF005L BMF 305K-PS-C-2-SA2-S49-00,3
Dimension	25.5 x 3 x 4.5 mm	33.5 x 9 x 26.2 mm	33.5 x 5 x 10.5 mm
Connection	—	M8x1-Male, 3-pin	M8x1-Male, 3-pin
Cable	PUR, 2 m	—	PUR, 0.3 m
Application	miniaturized actuators	larger actuators	larger actuators
Mounting	Mounting bracket BMF 303-HW*	Mounting bracket BMF 305-HW*	Mounting bracket BMF 305-HW*
Housing material	LCP	Aluminum	LCP
Interface	—	—	—
Switching output	PNP normally open (NO)	PNP normally open (NO)	PNP normally open (NO)
Switching frequency	30000 Hz	10000 Hz	10000 Hz
Operating voltage Ub	10...30 VDC	10...30 VDC	10...30 VDC
Ambient temperature	-25...85 °C	-25...85 °C	-25...85 °C
Magnetic field immune	—	—	—
IP rating	IP67	IP67	IP67
Approval/Conformity	cULus, CE, WEEE, EAC	CE, cULus, EAC, WEEE	CE, cULus, EAC, WEEE
Productview	Page 660	Page 660	Page 660

	BMF0056 BMF 305K-PS-C-2-PU-02	BMF0087 BMF 32M-PS-C-2-S4	BMF0088 BMF 32M-PS-C-2-S49	BMF008A BMF 32M-PS-W-2-S4	
	33.5 x 5 x 10.5 mm	25 x 11.9 x 26 mm	25 x 11.9 x 26 mm	25 x 11.9 x 26 mm	
	—	M12x1-Male, 4-pin, A-coded	M8x1-Male, 3-pin	M12x1-Male, 4-pin, A-coded	
	PUR, 2 m	—	—	—	
	larger actuators	Round cylinder, Pneumatic cylinder with trapezoidal slot	Round cylinder, Pneumatic cylinder with trapezoidal slot	Round cylinder, Pneumatic cylinder with trapezoidal slot	
	Mounting bracket BMF 305-HW*	with tube cuff	with tube cuff	with tube cuff	
	LCP	Aluminum	Aluminum	Aluminum	
	—	—	—	—	
	PNP normally open (NO)	PNP normally open (NO)	PNP normally open (NO)	PNP normally open (NO)	
	10000 Hz	10000 Hz	10000 Hz	10 Hz	
	10...30 VDC	10...30 VDC	10...30 VDC	10...30 VDC	
	-25...85 °C	-25...85 °C	-25...85 °C	-25...70 °C	
	—	—	—	weld-immune (AC)	
	IP67	IP67	IP67	IP67	
	cULus, CE, WEEE, EAC	CE, cULus, EAC, WEEE	CE, cULus, EAC, WEEE	cULus, CE, WEEE, EAC	
	Page 661	Page 661	Page 661	Page 661	

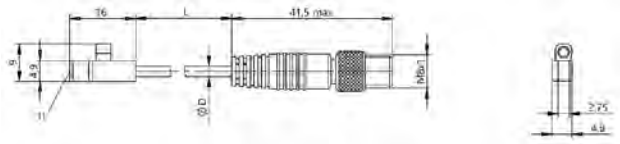

1) Sensing surface

BMF001L, BMF001P

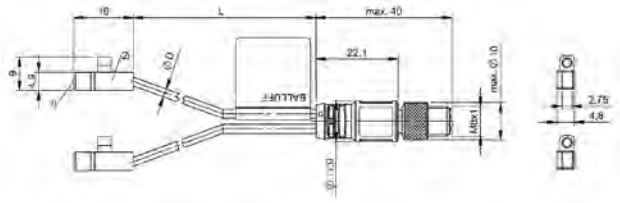

1) Sensing surface, 2) Sensor 1

BMF001R

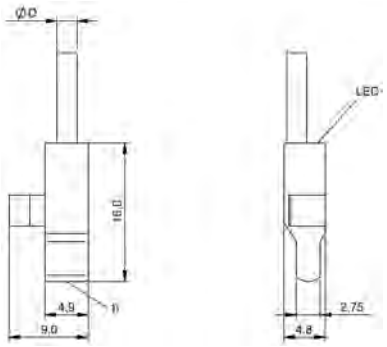

1) Sensing surface

BMF001E

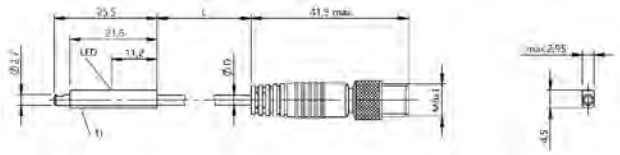

1) Sensing surface

BMF0043, BMF004C

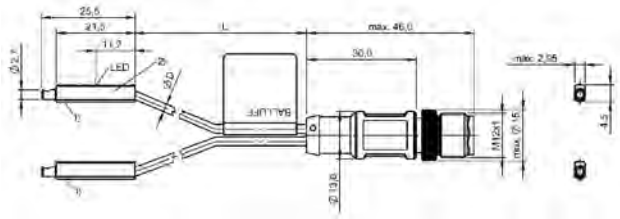

1) Sensing surface, 2) Sensor 1

BMF004E

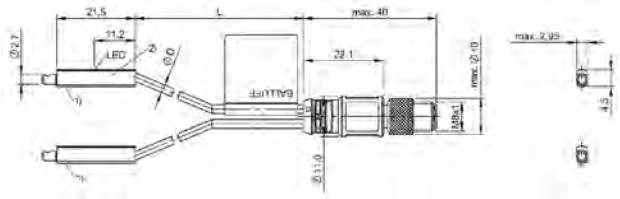

1) Sensing surface, 2) Sensor 1

BMF004F

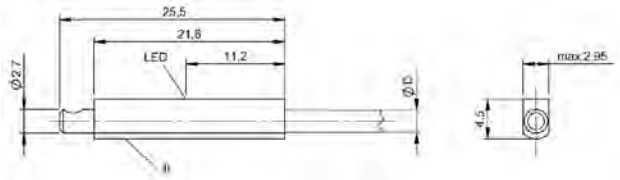

1) Sensing surface

BMF003U

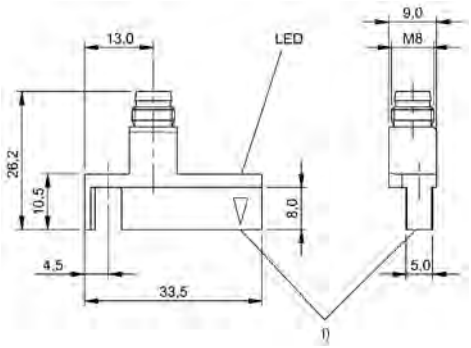

1) Sensing surface

BMF008F

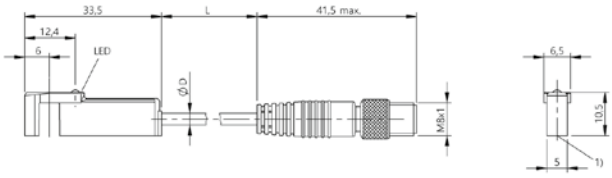

1) Sensing surface

BMF005L

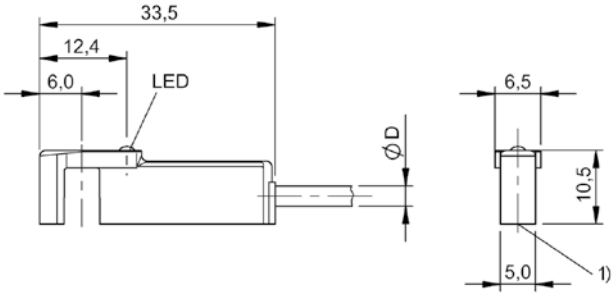

1) Sensing surface

BMF0056

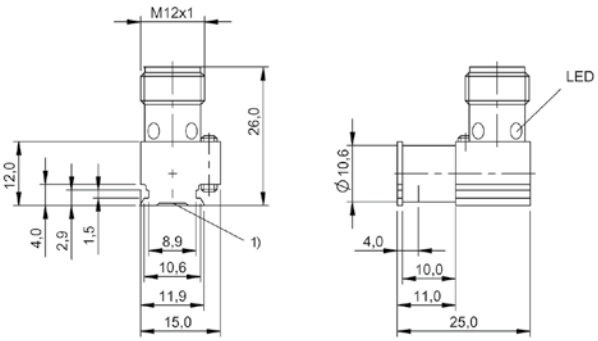

1) Sensing surface

BMF0087

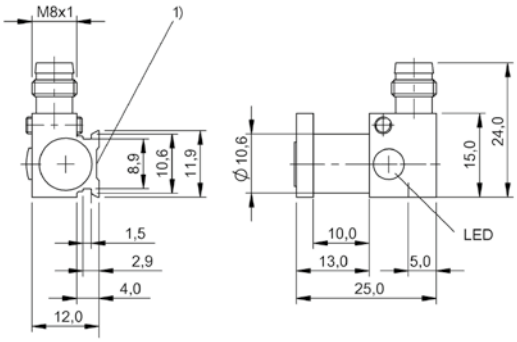

1) Sensing surface

BMF0088

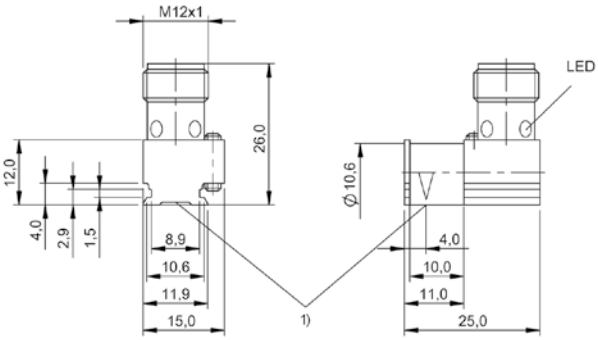

1) Sensing surface

BMF008A

Dimension	
Connection	
Cable	
Application	
Housing material	
Switching output	
Switching frequency	
Operating voltage Ub	
Ambient temperature	
Magnetic field immune	
IP rating	
Approval/Conformity	
Ex category	
Productview	

	BMF0029 BMF 21K-PS-C-2-S49	BMF0027 BMF 21K-PS-C-2-PU-03
	11 x 11 x 32 mm	33 x 23 x 11 mm
	M8x1-Male, 3-pin	—
	—	PUR, 3 m
	Pneumatic cylinder with tie rods, Pneumatic cylinder with DUO rail, Round cylinder, Profile cylinder	Pneumatic cylinder with tie rods, Pneumatic cylinder with DUO rail, Round cylinder, Profile cylinder
	PBT	PBT
	PNP normally open (NO)	PNP normally open (NO)
	10000 Hz	10000 Hz
	10...30 VDC	10...30 VDC
	-25...85 °C	-25...85 °C
	—	—
	IP67	IP67
	cULus, CE, WEEE, EAC	CE, cULus, EAC, WEEE
	—	—
	Page 664	Page 664

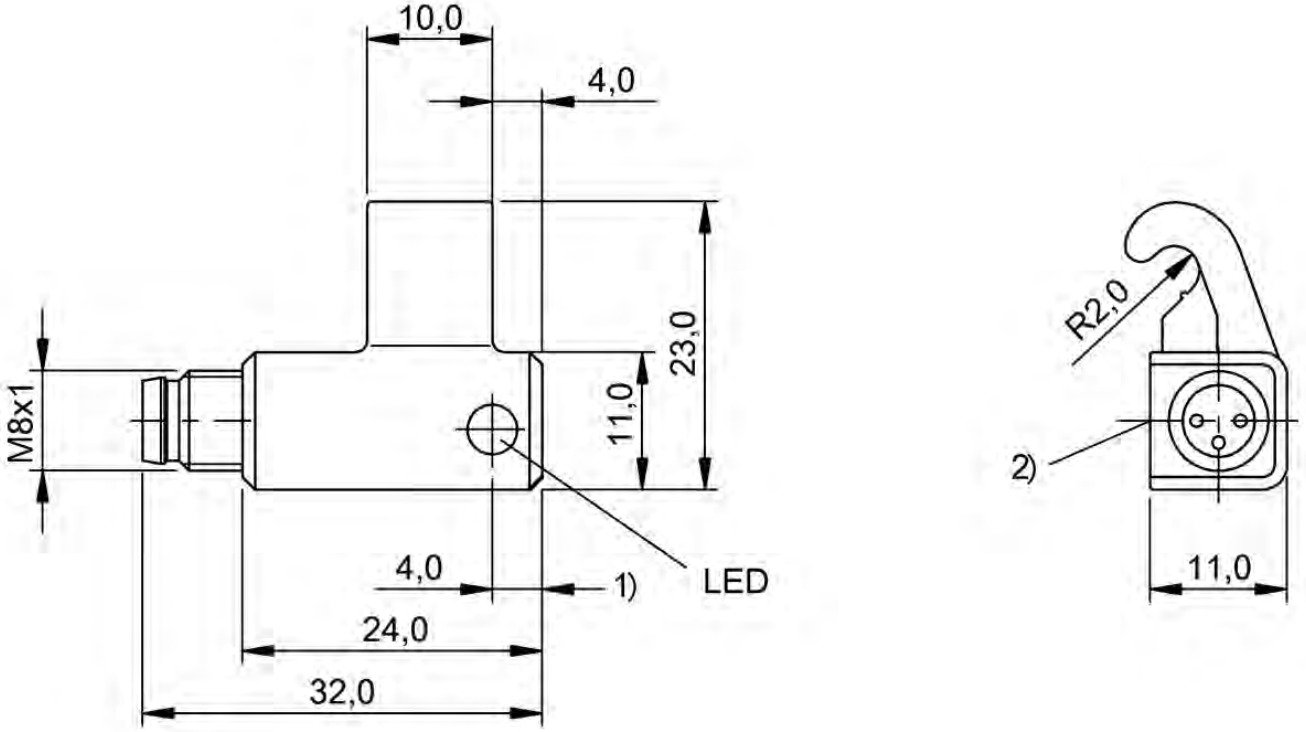

1) Measuring point, Sensing surface

BMF0029

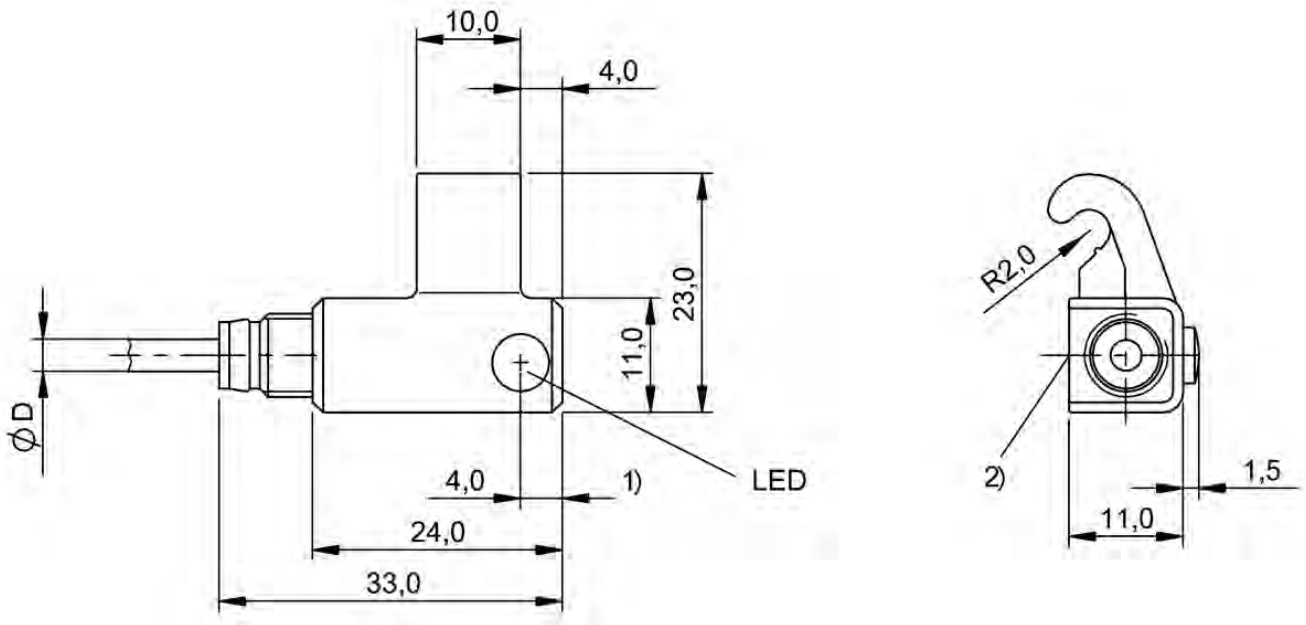

1) Measuring point, Sensing surface

BMF0027

	BMF001R BMF 103K-PS-C-2A-SA95-S75-00,3	BMF004E BMF 303K-PS-C-2A-SA95-S4-00,3	
Dimension	9 x 4.8 x 16 mm	25.5 x 3 x 4.5 mm	
Connection	M8x1-Male, 4-pin	M12x1-Male, 4-pin, A-coded	
Cable	PUR, 0.3 m	PUR, 0.3 m	
Application	Optimized response path especially suited for short-stroke cylinders.	miniaturized actuators	
Mounting	Mounting bracket BMF 103-HW*	Mounting bracket BMF 303-HW*	
Housing material	PBT	LCP	
Switching output	PNP normally open (NO)	PNP normally open (NO)	
Switching frequency	30000 Hz	30000 Hz	
Operating voltage Ub	10...30 VDC	10...30 VDC	
Ambient temperature	-25...85 °C	-25...85 °C	
Magnetic field immune	—	—	
IP rating	IP67	IP67	
Approval/Conformity	CE, cULus, EAC, WEEE	CE, cULus, EAC, WEEE	
Productview	Page 670	Page 670	

	BMF004F BMF 303K-PS-C-2A-SA95-S75-00,3	BMF00J2 BMF 233K-PS-C-2A-SA95-S4-00,3	BMF00J1 BMF 233K-PS-C-2A-SA95-S75-00,3	BMF00F9 BMF 243K-PS-C-2A-SA95-S4-00,3
	25.5 x 3 x 4.5 mm	24 x 2.9 x 3.6 mm	24 x 2.9 x 3.6 mm	24 x 3 x 3.75 mm
	M8x1-Male, 4-pin	M12x1-Male, 4-pin, A-coded	M8x1-Male, 4-pin	M12x1-Male, 4-pin, A-coded
	PUR, 0.3 m	PUR, 0.3 m	PUR, 0.3 m	PUR, 0.3 m
	miniaturized actuators	Pneumatic cylinder with C-slot, e.g. Festo, Sommer, etc.	Pneumatic cylinder with C-slot, e.g. Festo, Sommer, etc.	Pneumatic cylinder with C-slot, e.g. SMC, Festo*, Schunk, Sommer, Gimatic (*not suitable for Festo Series ADVC and AEVC)
	Mounting bracket BMF 303-HW*	can be installed in C-slot from above	can be installed in C-slot from above	can be installed in C-slot from above
	LCP	PA 12	PA 12	PA 12
	PNP normally open (NO)	PNP normally open (NO)	PNP normally open (NO)	PNP normally open (NO)
	30000 Hz	3000 Hz	3000 Hz	3000 Hz
	10...30 VDC	10...30 VDC	10...30 VDC	10...30 VDC
	-25...85 °C	-25...85 °C	-25...85 °C	-25...85 °C
	—	—	—	—
	IP67	IP67	IP67	IP67
	CE, cULus, EAC, WEEE	cULus, CE, WEEE, EAC	cULus, CE, WEEE, EAC	CE, cULus, EAC, WEEE
	Page 671	Page 671	Page 672	Page 672

Do you need more details? Our Product Finder at www.balluff.com provides you with product-specific information, including technical drawings, data sheets, user guides and more for each individual product. All items are available for download.

	BMF00ET BMF 243K-PS-C-2A-SA95-S75-00,3	BMF00C9 BMF 235K-PS-C-2A-SA95-S4-00,3	
Dimension	24 x 3 x 3.75 mm	23.5 x 5 x 5.5 mm	
Connection	M8x1-Male, 4-pin	M12x1-Male, 4-pin, A-coded	
Cable	PUR, 0.3 m	PUR, 0.3 m	
Application	Pneumatic cylinder with C-slot, e.g. SMC, Festo*, Schunk, Sommer, Gimatic (*not suitable for Festo Series ADVC and AEVC)	Pneumatic cylinder with T-slot. For dimensions, see sketch in product view.	
Mounting	can be installed in C-slot from above	can be installed in T-slot from above	
Housing material	PA 12	PA 12	
Switching output	PNP normally open (NO)	PNP normally open (NO)	
Switching frequency	3000 Hz	3000 Hz	
Operating voltage Ub	10...30 VDC	10...30 VDC	
Ambient temperature	-25...85 °C	-25...85 °C	
Magnetic field immune	—	—	
IP rating	IP67	IP67	
Approval/Conformity	CE, cULus, EAC, WEEE	CE, cULus, EAC, WEEE	
Productview	Page 673	Page 673	

	BMF00CA BMF 235K-PS-C-2A-SA95-S75-00,3			
	23.5 x 5 x 5.5 mm			
	M8x1-Male, 4-pin			
	PUR, 0.3 m			
	Pneumatic cylinder with T-slot. For dimensions, see sketch in product view.			
	can be installed in T-slot from above			
	PA 12			
	PNP normally open (NO)			
	3000 Hz			
	10...30 VDC			
	-25...85 °C			
	—			
	IP67			
	CE, cULus, EAC, WEEE			
	Page 674			

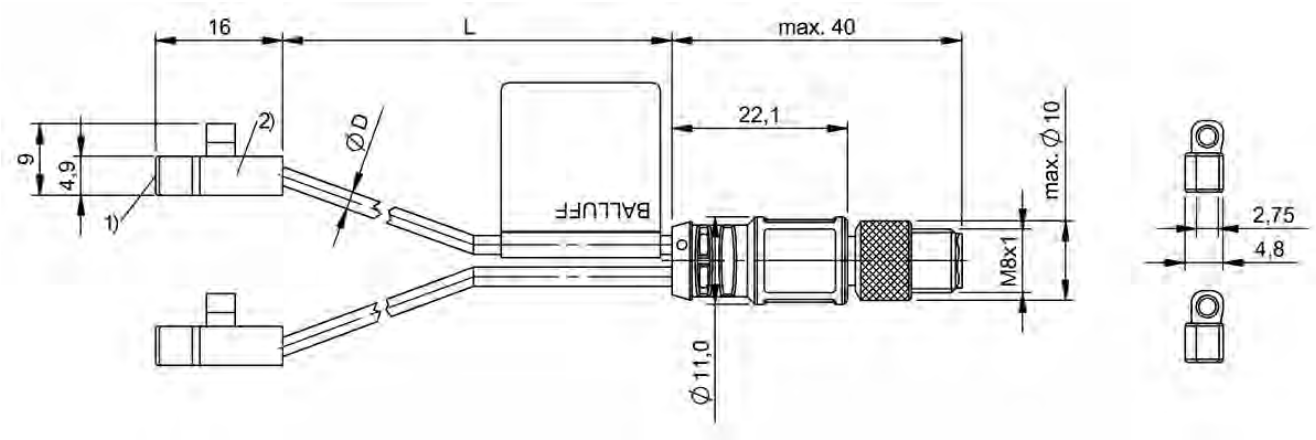

1) Sensing surface, 2) Sensor 1

BMF001R

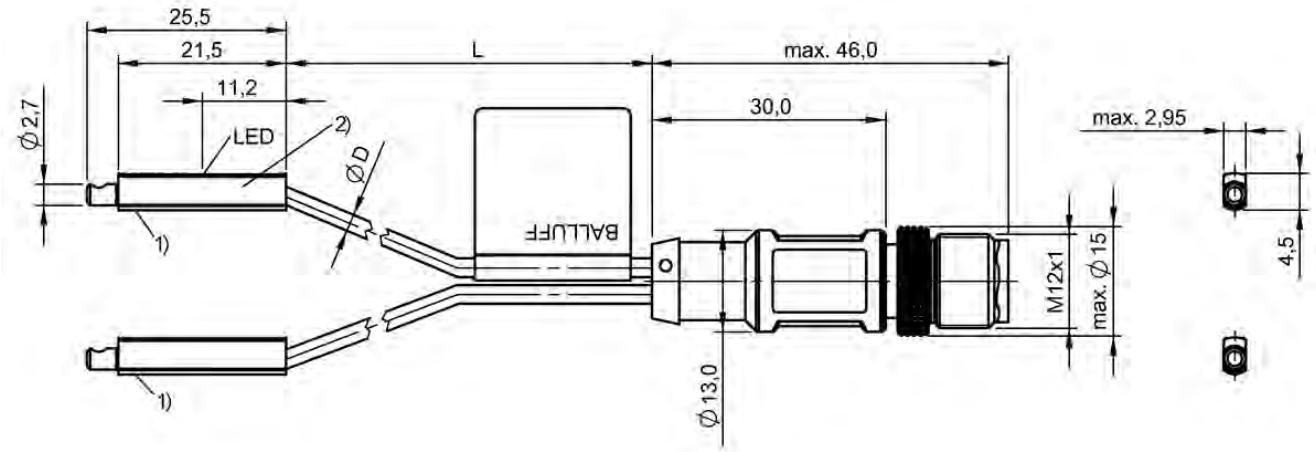

1) Sensing surface, 2) Sensor 1

BMF004E

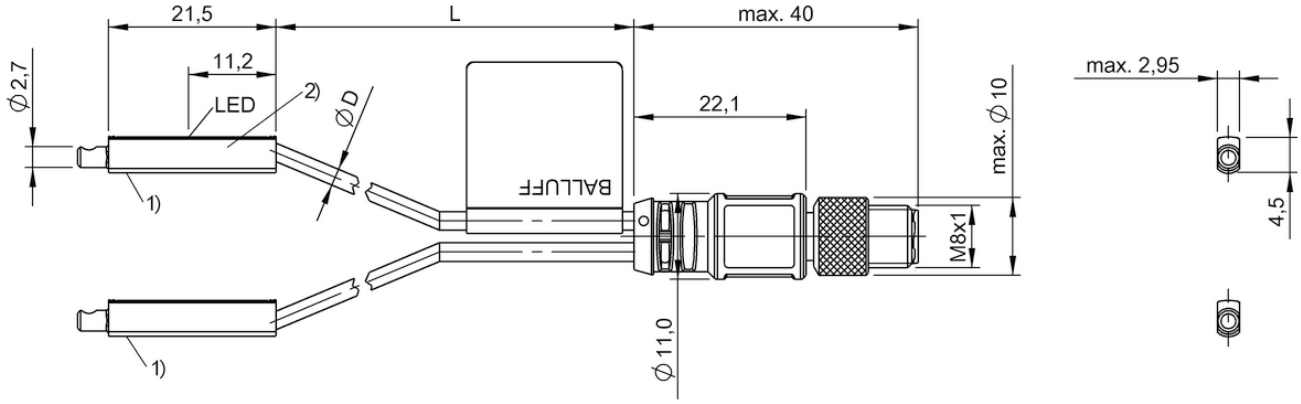

1) Sensing surface, 2) Sensor 1

BMF004F

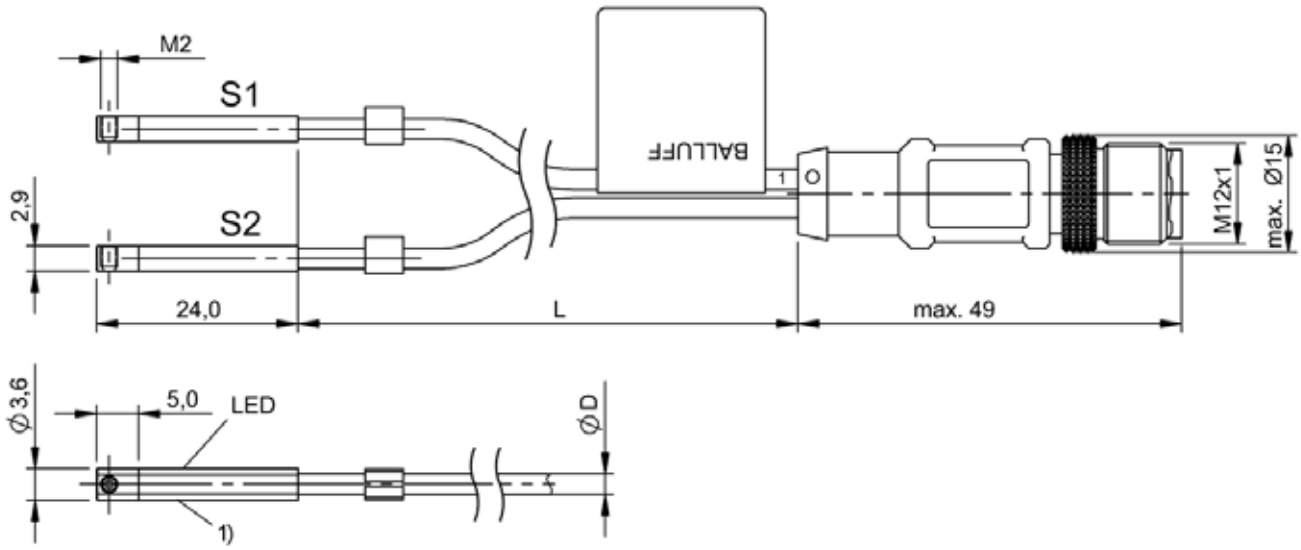

1) Sensing surface

BMF00J2

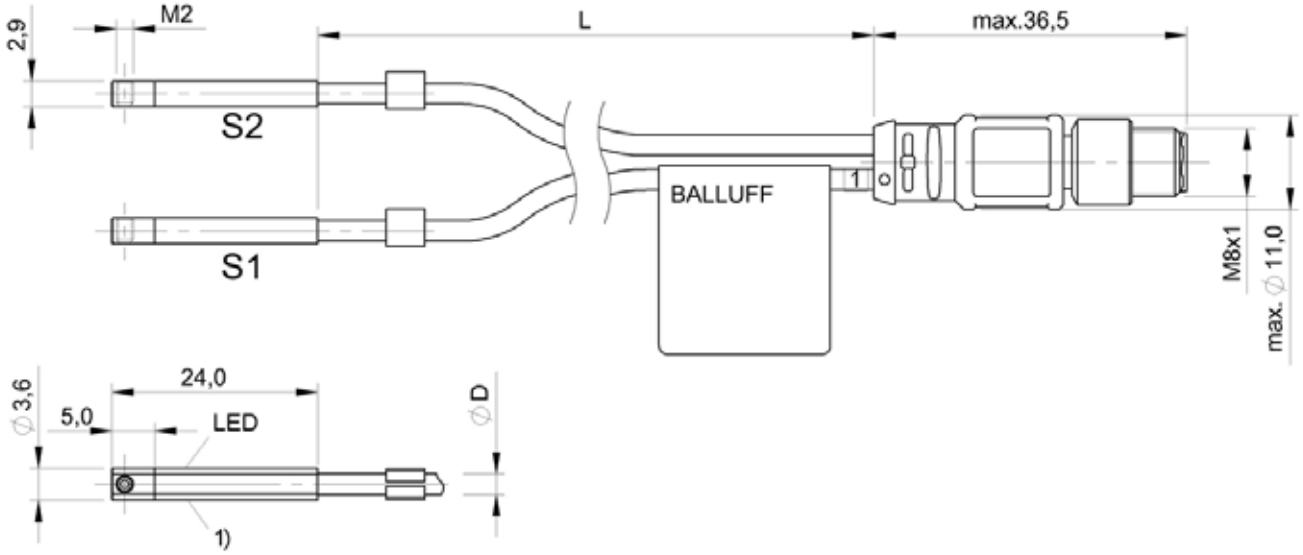

1) Sensing surface

BMF00J1

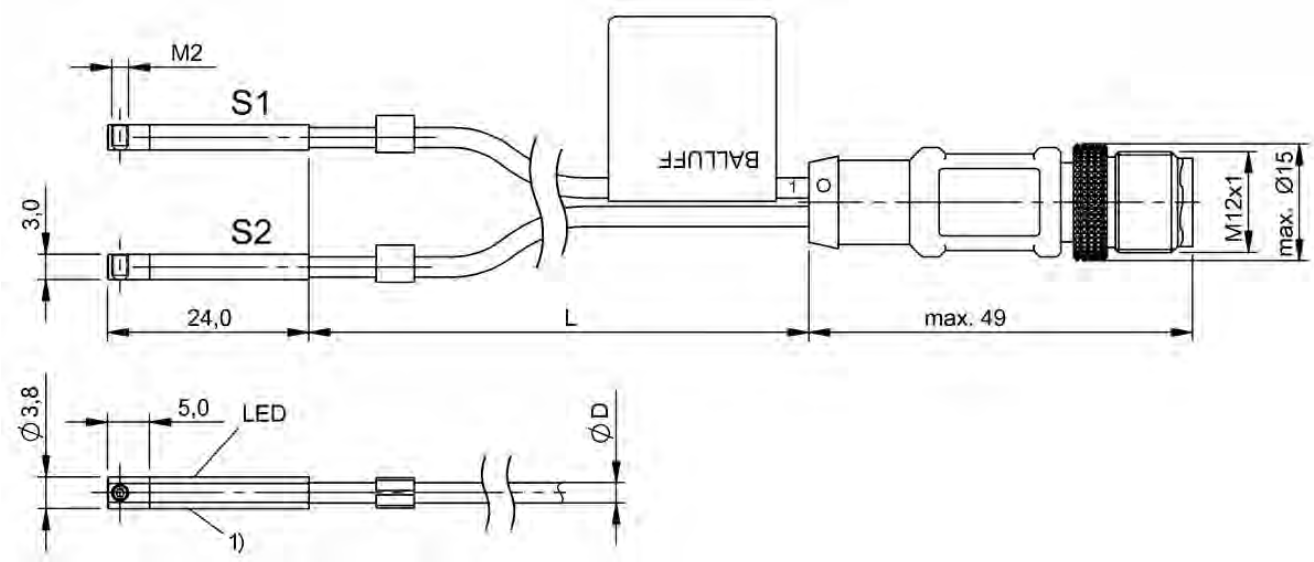

1) Sensing surface

BMF00F9

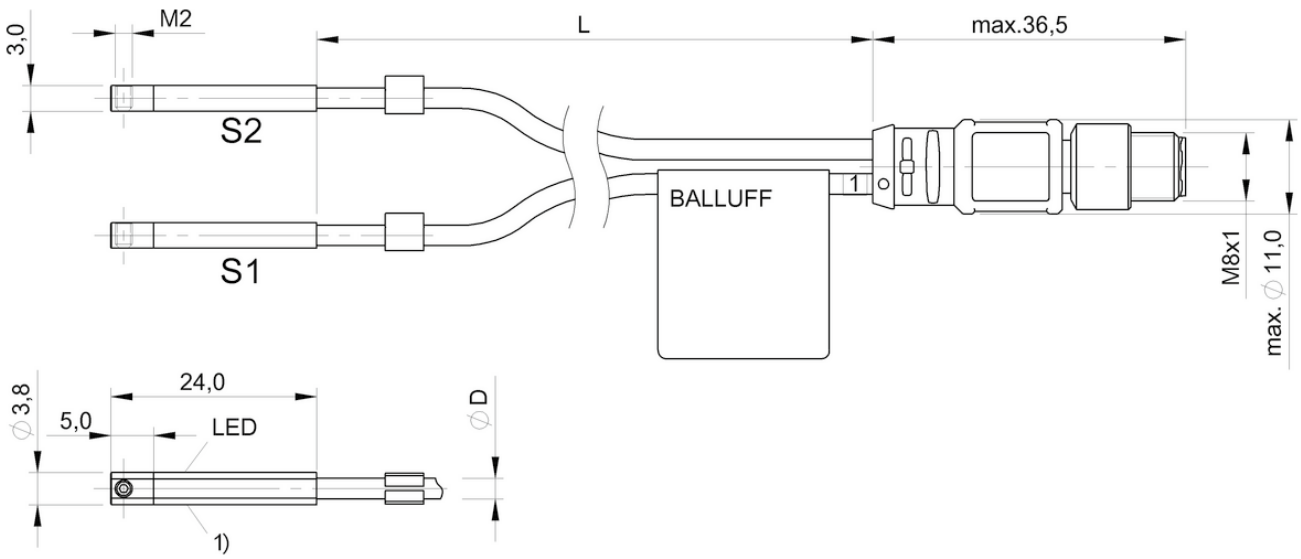

1) Sensing surface

BMF00ET

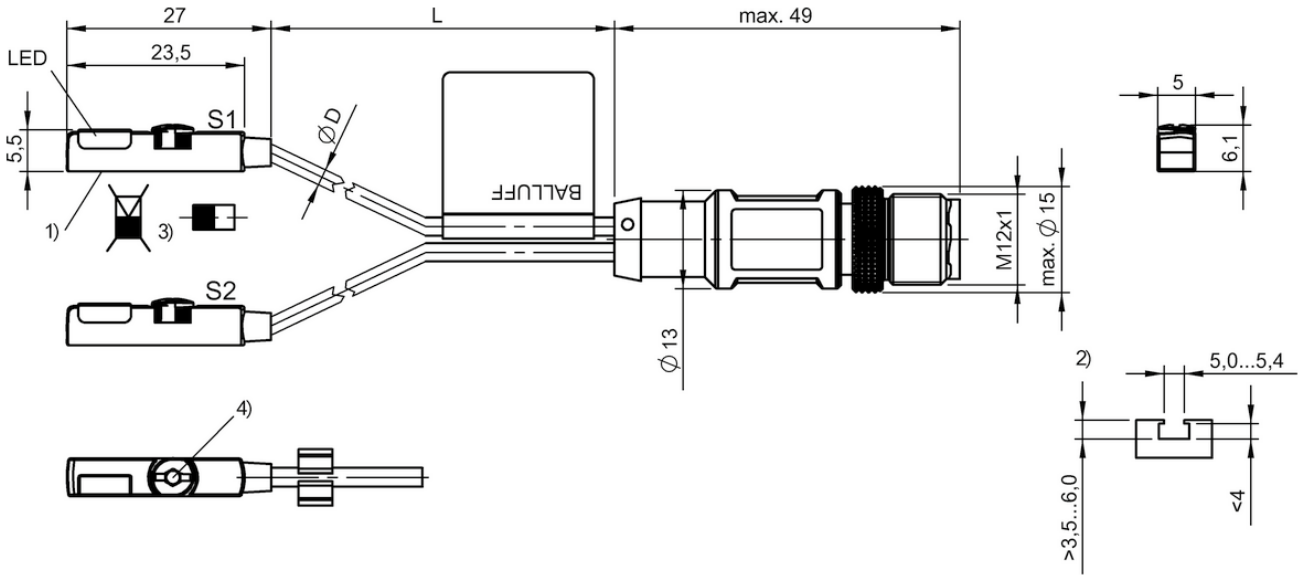

1) Sensing surface, 2) see remarks, 3) see remarks, 4) see remarks

BMF00C9

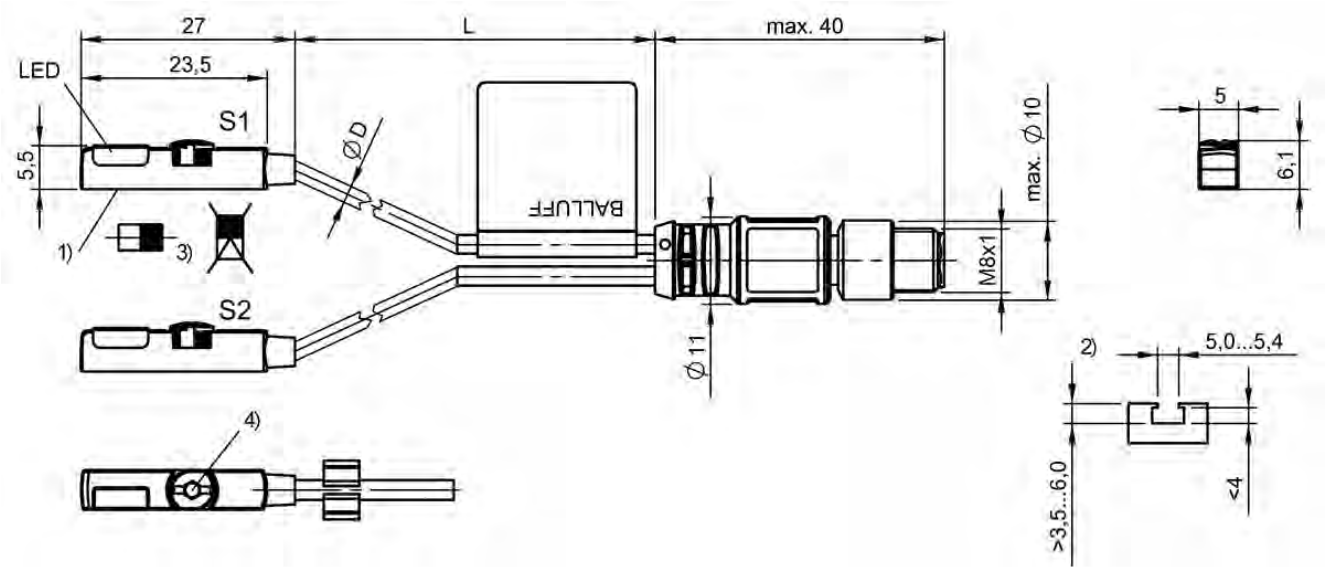

1) Sensing surface, 2) see remarks, 3) see remarks, 4) see remarks

BMF00CA

Dimension	
Connection	
Cable	
Application	
Mounting	
Housing material	
Switching output	
Switching frequency	
Operating voltage Ub	
Ambient temperature	
IP rating	
Approval/Conformity	
Productview	

	BMF000L BMF 07M-PS-D-2-SA2-S49-00,3	BMF000P BMF 08M-PS-C-2-KPU-02
	Ø 6.5 x 30 mm	Ø 8 x 30.5 mm
	M8x1-Male, 3-pin	—
	PUR, 0.3 m	PUR, 2 m
	Flexible mounting, Switching distances > 20 mm possible	Flexible mounting, Switching distances > 20 mm possible
	Clamps	Clamps
	Brass, nickel plated	Brass, nickel plated
	PNP normally open (NO)	PNP normally open (NO)
	10000 Hz	10000 Hz
	10...30 VDC	10...30 VDC
	-25...85 °C	-25...85 °C
	IP67	IP67
	cULus, CE, WEEE, EAC	cULus, CE, WEEE, EAC
	Page 678	Page 678

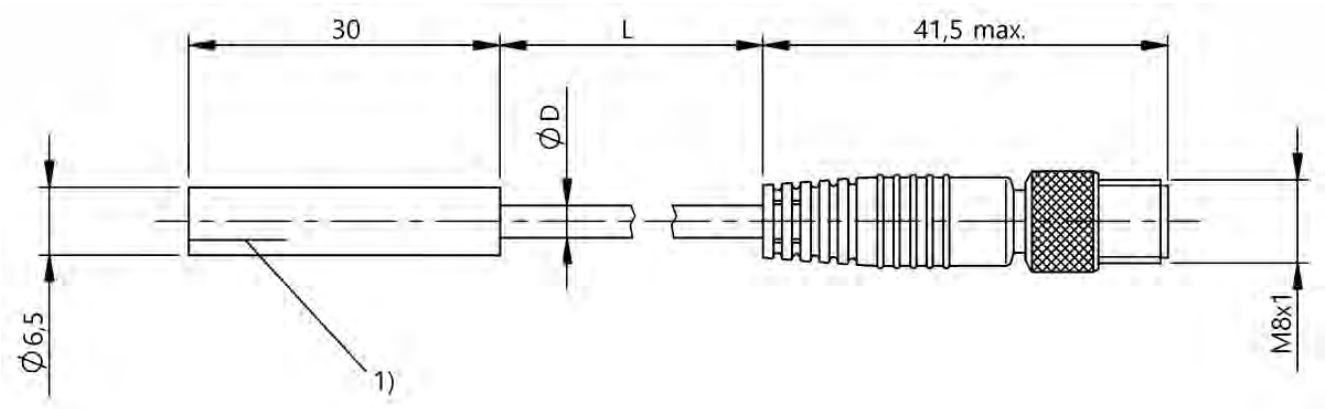

1) see remarks

BMF000L

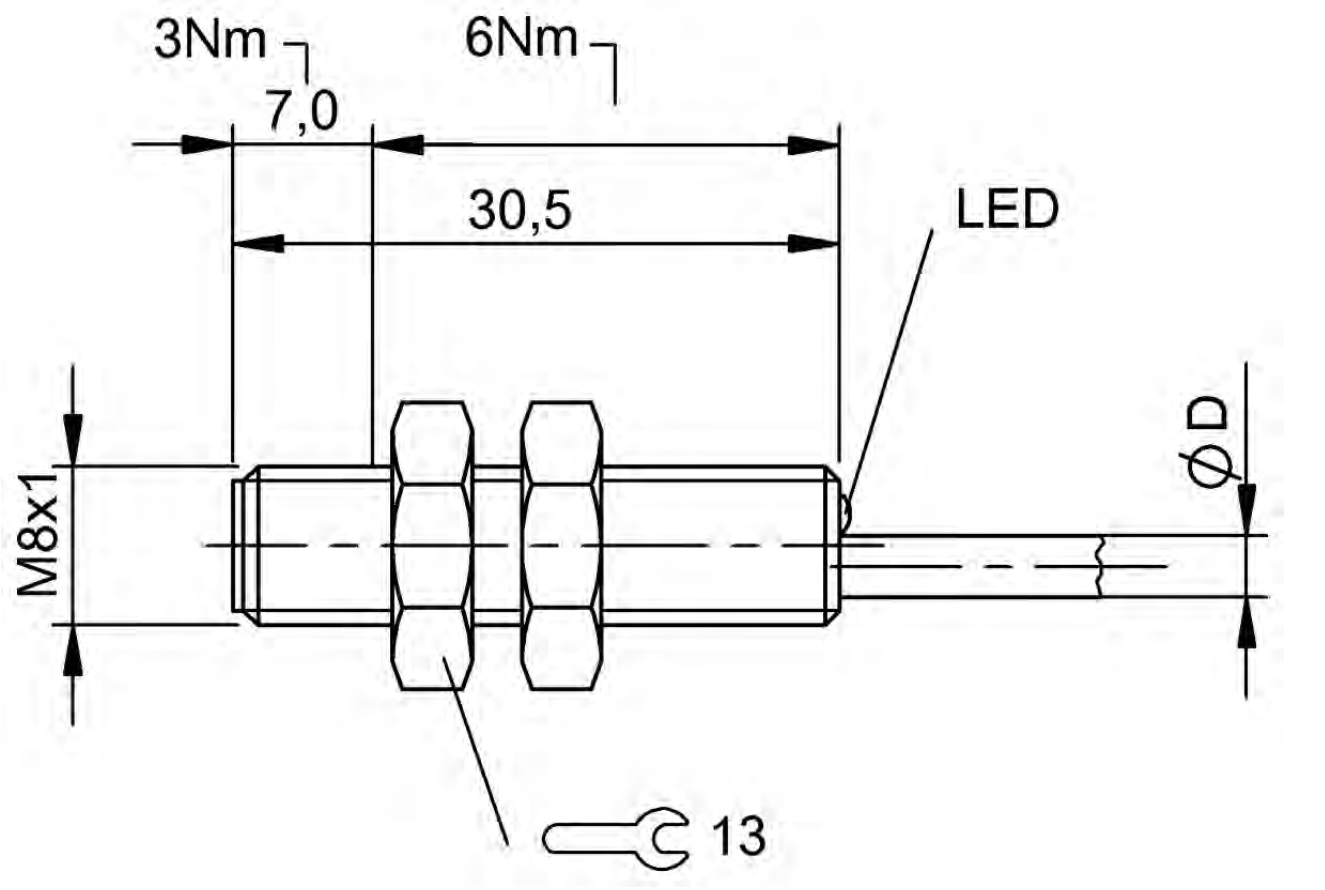

BMF000P

Many series and form factors for the greatest flexibility.
The classics for metalworking and automotive

MECHANICAL CAM SWITCHES

The cam switches from Balluff are used on machine tools, presses, in flexible manufacturing centers, robots, assembly and conveying devices, and in machine and equipment construction. They serve as command transmitters for automatic controls, for positioning and for end-of-travel switching.

The design principle of the devices, their variety of possible switching actions, as well as consistent quality inspection, guarantee consistently high quality and reliability.

At Balluff you can choose from nine different series and five plunger types each: Chisel, ball, roller, roller bearing and chisel with wiper plate. A large number of connection varieties is also available.

The most important benefits

- Reliable and rugged, even in harsh environments
- Flawless functionality in the event of vibrations, shock loads, temperature swings, aggressive cooling lubricants and heavy chip accumulation
- Maintenance-free, self-lubricating ram guide with plain bearing bush
- High-quality Viton seals
- Protection class IP67
- Also available with inductive switching points

Single position switch	SERIES F 60 COMPLIANT WITH DIN 43693
Plunger material	Stainless steel, contact surfaces induction-hardened
Housing material	Cast aluminum, corrosion-resistant, anodized finish
Connection type	M16 x 1.5 for cable gland or connector
Ambient temperature	–5...+85 °C
Degree of protection as per IEC 60529	IP67
Approval/Conformity	CE
Productview and installation	Page 714

Ordering example:

BNS 819-F_-60-101-_ _-_ _ _ _

Plunger style
- D Chisel
- K Ball
- R Roller
- L Roller bearing
- E Chisel with wiper plate

Optional Function indicator
- FD 6...60 V AC/DC
- FE 90...250 V AC/DC

Optional Male
- S80R 5-pin, right
- S80L 5-pin, left

Single position switch	SERIES 99 AND 100
Plunger material	Stainless steel, contact surfaces induction-hardened
Housing material	Cast aluminum, corrosion-resistant, anodized finish
Connection type	Cable gland (M12 x 1.5 Series 99, M16 x 1.5 Series 100) or connector
Ambient temperature	–5...+85 °C
Degree of protection as per IEC 60529	IP 67
Approval/Conformity	CE
Productview and installation	Page 714

Ordering example:

BNS 819-___-_-1_-__-___

Serie
- 99 Series 99
- 100 Series 100

Plunger style
- D Chisel
- K Ball
- R Roller
- E Chisel with wiper plate

Switch elements
- 0 BSE 69.1
- 1 BSE 70.1
- 2 BSE 73.1
- 3 BSE 74.1

Optional Function indicator
- FC 6...24 V DC

Optional Male
- S80 5-pin
- S4 4-pin no PE conductor

Only with BSE 69.1 or BSE 73.1.

Multiple position switches	**SERIES 100 COMPLIANT WITH DIN 43697**
Plunger material	Stainless steel, contact surfaces induction-hardened
Housing material	Cast aluminum, corrosion-resistant, anodized finish
Connection type	M25 x 1.5 for cable gland or connector
Ambient temperature	–5...+85 °C
Degree of protection as per IEC 60529	IP67
Approval/Conformity	CE
Productview and installation	Page 715

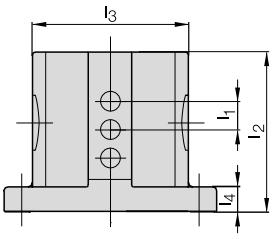

Available sizes

Number of plungers		2	3	4	5	6	8	10	12
Dimension l_2 with	Dimension l_1 = 12 mm	70	80	90	105	120	140	170	200
	Dimension l_3	88	88	88	88	88	80	80	80
	Dimension l_4	14	14	14	14	14	20	20	20
	Dimension l_1 = 16 mm	70	90	105	120	140	170	200	240
	Dimension l_3	88	88	88	88	80	80	80	80
	Dimension l_4	14	14	14	14	20	20	20	20
Number of connectors required for standard wiring	S80 or S4 without FD/FE	1	1	2	2	2			
	S80 or S4 with FD/FE	1	2	2	3	3			
	S90 without FD/FE	1	1	1	1	1	1	1	2
	S90 with FD/FE	1	1	1	1	1	1	2	2

Dimensions in mm

Ordering example:

BNS 819-D__-___-100-10-__-____-_

Number of plungers
- 02 2-way
- 03 3-way
- 04 4-way
- ...

Plunger style
- D Chisel
- K Ball
- R Roller
- L Roller bearing
- E Chisel with wiper plate

Switch position spacing
- 12 12 mm
- 16 16 mm

Optional Function indicator
- FD 6...60 V AC/DC
- FE 90...250 V AC/DC

Optional Male
- S80R 5-pin, right
- S80L 5-pin, left
- S80S 5-pin, right and left
- S90R 12-pin, right
- S90L 12-pin, left
- S90S 12-pin, right and left
- S4R 4-pin, right (no PE conductor)
- S4L 4-pin, left (no PE conductor)
- S4S 4-pin, right and left (no PE conductor)

Optional Interface
- I IO-Link (only with S4R, S4L)

Multiple position switches	SERIES 62
Plunger material	Stainless steel, contact surfaces induction-hardened
Housing material	Cast aluminum, corrosion-resistant, anodized finish
Connection type	M20 x 1.5 for cable gland or connector
Ambient temperature	–5...+85 °C
Degree of protection as per IEC 60529	IP67
Approval/Conformity	CE
Productview and installation	Page 715

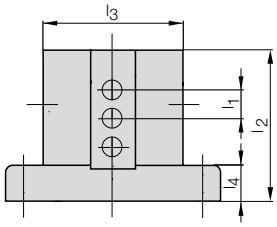

Available sizes

Number of plungers		2	3	4	5	6	8	10
Dimension l_2 with	Dimension l_1 = 12 mm	64	72	84	96	112	130	160
	Dimension l_3	88	88	88	88	88	80	80
	Dimension l_4	14	14	14	14	14	20	20
	Dimension l_1 = 16 mm	64	84	96	112	130	160	192
	Dimension l_3	88	88	88	88	80	80	80
	Dimension l_4	14	14	14	14	20	20	20
Number of connectors	S80 or S4 without FD/FE	1	1	2	2	2		
	S80 or S4 with FD/FE	1	2	2	3	3		
	S90 without FD/FE	1	1	1	1	1	1	1
	S90 with FD/FE	1	1	1	1	1	1	2

Dimensions in mm

Ordering example:

BNS 819-D__-___-62-10-__-____-_

Number of plungers
02 2-way
03 3-way
04 4-way
...

Plunger style
D Chisel
K Ball
R Roller
L Roller bearing
E Chisel with wiper plate

Switch position spacing
12 12 mm
16 16 mm

Optional Function indicator
FD 6...60 V AC/DC
FE 90...250 V AC/DC

Optional Male
S80R 5-pin, right
S80L 5-pin, left
S80S 5-pin, right and left
S90R 12-pin, right
S90L 12-pin, left
S90S 12-pin, right and left
S4R 4-pin, right (no PE conductor)
S4L 4-pin, left (no PE conductor)
S4S 4-pin, right and left (no PE conductor)

Optional Interface
I IO-Link (only with S4R, S4L)

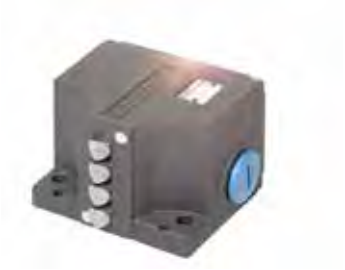

Multiple position switches	SERIES 61
Plunger material	Stainless steel, contact surfaces induction-hardened
Housing material	Cast aluminum, corrosion-resistant, anodized finish
Connection type	M20 x 1.5 for cable gland or connector
Ambient temperature	–5...+85 °C
Degree of protection as per IEC 60529	IP67
Approval/Conformity	CE
Productview and installation	Page 716

Available sizes

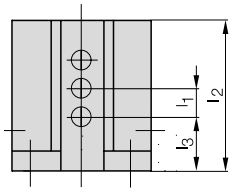

Number of plungers	Plunger-spacing Dimension	Housing B Standard Dimension		Housing B Dimension		Housing C Dimension		Number of connectors S80 or S4 without FD/FE	No. of connectors S80 or S4 with FD/FE	No. of connectors S90 without FD/FE	Number of connectors S90 with FD/FE
	l_1	l_2	l_3	l_2	l_3	l_2	l_3				
2	12	36	12	60	30	48 60	24 30	1	1	1	1
3	12	48	12	60	24	60	24	1	2	1	1
4	12	60	12					2	2	1	1
5	12	72	12					2	3	1	1
6	12	84	12					2	3	1	1
2	16	48	16	60	30	60	30	1	1	1	1
3	16	72	16					1	2	1	1
4	16	84	16					2	2	1	1

Dimensions in mm

Ordering example:

BNS 819-___-____-61-__-10-__-____-__ Optional

Housing style
- B Standard 2 × M20 x 1.5 side
- B 3 × M20 x 1.5 side and in flange
- C 2 × M20 x 1.5 side and cable gland in flange

Number of plungers
- 02 2-way
- 03 3-way
- 04 4-way
- ...

Plunger style
- D Chisel
- K Ball
- R Roller
- L Roller bearing
- E Chisel with wiper plate

Switch position spacing
- 12 12 mm
- 16 16 mm

Spacing l_3
- 12 12 mm
- 16 16 mm
- 24 24 mm
- 30 30 mm

Optional Function indicator
- FD 6...60 V AC/DC
- FE 90...250 V AC/DC

Optional Male
- S80R 5-pin, right
- S80L 5-pin, left
- S80S 5-pin, right and left
- S90R 12-pin, right
- S90L 12-pin, left
- S90S 12-pin, right and left
- S4R 4-pin, right (no PE conductor)
- S4L 4-pin, left (no PE conductor)
- S4S 4-pin, right and left (no PE conductor)

Optional Interface
- I IO-Link (only with S4R, S4L)

Multiple position switches	SERIES 72
Plunger material	Stainless steel, contact surfaces induction-hardened
Housing material	Cast aluminum, corrosion-resistant, anodized finish
Connection type	M25 x 1.5 for cable gland or connector
Ambient temperature	–5...+85 °C
Degree of protection as per IEC 60529	IP67
Approval/Conformity	CE
Productview and installation	Page 716

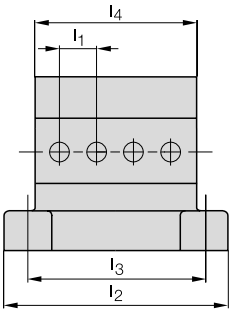

Available sizes

Number of plungers		2	3	4	5	6	8	10
Dimension l_2 with	Dimension l_1 = 12 mm	84	84	100	116	132	164	180
Dimension l_3 with	Dimension l_1 = 12 mm	66	66	82	98	114	146	162
Dimension l_4 with	Dimension l_1 = 12 mm	54	54	68	84	100	132	148
Dimension l_2 with	Dimension l_1 = 16 mm	84	100	116	132	148	180	212
Dimension l_3 with	Dimension l_1 = 16 mm	66	82	98	114	130	162	194
Dimension l_4 with	Dimension l_1 = 16 mm	54	68	84	100	116	148	180
Number of connectors	S80 without FD/FE	1	1	2	2	2		
	S80 with FD/FE	1	2	2	3	3		
	S90 without FD/FE	1	1	1	1	1	1	2
	S90 with FD/FE	1	1	1	1	1	2	2

Dimensions in mm

Ordering example:

BNS 819-B__-___-72-10-__-____

Number of plungers
- 02 2-way
- 03 3-way
- 04 4-way
- ...

Plunger style
- D Chisel
- K Ball
- R Roller
- L Roller bearing
- E Chisel with wiper plate

Switch position spacing
- 12 12 mm
- 16 16 mm

Optional Function indicator
- FD 6...60 V AC/D C
- FE 90...250 V AC/DC

Optional Male
- S80R 5-pin, right
- S80L 5-pin, left
- S80S 5-pin, right and left
- S90R 12-pin, right
- S90L 12-pin, left
- S90S 12-pin, right and left

Do you need more details? Our Product Finder at www.balluff.com provides you with product-specific information, including technical drawings, data sheets, user guides and more for each individual product. All items are available for download.

Multiple position switches	SERIES 46
Plunger material	Stainless steel, contact surfaces induction-hardened
Housing material	Cast aluminum, corrosion-resistant, anodized finish
Connection type	M16 x 1.5 for cable gland or connector
Ambient temperature	–5...+85 °C
Degree of protection as per IEC 60529	IP67
Approval/Conformity	CE
Productview and installation	Page 717

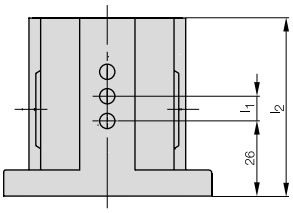

Available sizes

Number of plungers		2	3	4	5	6	8	10
Dimension l_2 with	Dimension l_1 = 8 mm	49	59	64	72	80	96	112
	Dimension l_3	54	54	54	54	54	50	50
	Dimension l_1 = 10 mm	49	59	72	80	89	112	129
	Dimension l_3	54	54	54	54	50	50	50
Number of connectors	S80 without FC or S4	1	1	2	2	2		
	S80 with FC or S4	1	2	2	3	3		
	S4 without FC (IO-Link)	1	1	1	1	1	1	1
	S4 with FC (IO-Link)	1	1	1	1	1	1	1

Dimensions in mm

Ordering example:

BNS 819-B__-____-46-1_-__-____-_

Number of plungers
02 2-way
03 3-way
04 4-way
...

Plunger style
D Chisel
K Ball
R Roller
E Chisel with wiper plate

Switch position spacing
08 8 mm
10 10 mm

Switch element
0 BSE 69.1
1 BSE 70.1
2 BSE 73.1
3 BSE 74.1

Optional Function indicator
FC 6...24 V DC

Optional Male
S80R 5-pin, right
S80L 5-pin, left
S80S 5-pin, right and left
S4R 4-pin, right (no PE conductor)
S4L 4-pin, left (no PE conductor)
S4S 4-pin, right and left (no PE conductor)

Only with BSE 69.1 or BSE 73.1

Optional Interface
I IO-Link (only with S4R, S4L)

Multiple position switches	SERIES 40
Plunger material	Stainless steel, contact surfaces induction-hardened
Housing material	Cast aluminum, corrosion-resistant, anodized finish
Connection type	M16 x 1.5 for cable gland or connector
Ambient temperature	–5...+85 °C
Degree of protection as per IEC 60529	IP67
Approval/Conformity	CE
Productview and installation	Page 717

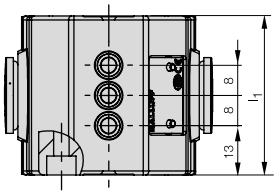

Available sizes

Number of plungers		2	3	4	5	6
Dimension l_1		34	42	50	58	66
Number of connectors	S80 without FC or S4	1	1	2	2	2
	S80 with FC or S4	1	2	2		
	S4 without FC (IO-Link)	1	1	1	1	1
	S4 with FC (IO-Link)	1	1	1	1	1

Dimensions in mm

Ordering example:

BNS 819-B__-____-40-1_-__-____-_

Number of plungers
02 2-way
03 3-way
04 4-way
...

Plunger style
D Chisel
K Ball
R Roller
E Chisel with wiper plate

Switch position spacing
08 8 mm

Switching element
0 BSE 69.1
1 BSE 70.1
2 BSE 73.1
3 BSE 74.1

Optional Function indicator
FC 6...24 V DC

Optional Male
S80R 5-pin, right
S80L 5-pin, left
S80S 5-pin, right and left
S4R 4-pin, right (no PE conductor)
S4L 4-pin, left (no PE conductor)
S4S 4-pin, right and left (no PE conductor)

Only with BSE 69.1 or BSE 73.1

Optional Interface
I IO-Link (only with S4R, S4L)

Do you need more details? Our Product Finder at www.balluff.com provides you with product-specific information, including technical drawings, data sheets, user guides and more for each individual product. All items are available for download.

Multiple position switches with quick-change plunger block	**SERIES 100 COMPLIANT WITH DIN 43697**
Plunger material	Stainless steel, contact surfaces induction-hardened
Housing material	Cast aluminum, corrosion-resistant, anodized finish
Connection type	M25 x 1.5 for cable gland or connector
Ambient temperature	–5...+85 °C
Degree of protection as per IEC 60529	IP67
Approval/Conformity	CE
Productview and installation	Page 718

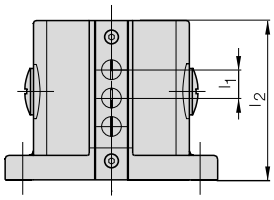

Available sizes

Number of plungers		2	3	4	5	6
Dimension l_2 with	l_1 = 12 mm	70	80	90	105	120
	l_1 = 16 mm	70	90	105	120	
Number of connectors	S80 without FD/FE	1	1	2	2	2
	S80 with FD/FE	1	2	2	3	3
	S90 without FD/FE	1	1	1	1	1
	S90 with FD/FE	1	1	1	1	1
	S4 without FD (IO-Link)	1	1	1	1	1
	S4 with FD (IO-Link)	1	1	1	1	1

Dimensions in mm

Ordering example:

BNS 829-D__-____-100-10-__-____

Number of plungers
02 2-way
03 3-way
04 4-way
...

Plunger style
D Chisel
K Ball
R Roller
L Roller bearing

Switch position spacing
12 12 mm
16 16 mm

Optional Function indicator
FD 6...60 V AC/DC
FE 90...250 V AC/DC

Optional Male
S80R 5-pin, right
S80L 5-pin, left
S80S 5-pin, right and left
S90R 12-pin, right
S90L 12-pin, left
S90S 12-pin, right and left
S4R-I 4-pin, right only for IO-Link
S4L-I 4-pin, left only for IO-Link

Multiple position switches with quick-change plunger block	**SERIES 61**
Plunger material	Stainless steel, contact surfaces induction-hardened
Housing material	Cast aluminum, corrosion-resistant, anodized finish
Connection type	M20 x 1.5 for cable gland or connector
Ambient temperature	–5...+85 °C
Degree of protection as per IEC 60529	IP67
Approval/Conformity	CE
Productview and installation	Page 718

Available sizes

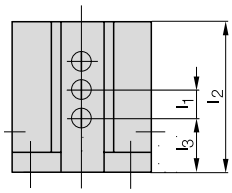

Number of Plunger	Plunger-spacing Dimension	Housing B Standard Dimension		Housing B Dimension		Housing C Dimension		Number of connectors S80 without FD/FE	No. of connectors S80 with FD/FE	No. of connectors S90 with or without FD/FE	No. of connectors S4 with or without FD (IO-Link)
	l_1	l_2	l_3	l_2	l_3	l_2	l_3				
2	12	36	12	60	30	48 60	24 30	1	1	1	1
3	12	48	12	60	24	60	24	1	2	1	1
4	12	60	12					2	2	1	1
5	12	72	12					2	3	1	1
6	12	84	12					2	3	1	1
2	16	48	16	60	30	60	30	1	1	1	1
3	16	72	16					1	2	1	1
4	16	84	16					2	2	1	1

Dimensions in mm

Ordering example:

BNS 829-___-____-61-__-10-__-____

Housing style
- B Standard 2 × M20 x 1.5 side
- B 3 × M20 x 1.5 side and in flange
- C 2 × M20 x 1.5 side and cable gland in flange

Number of plungers
- 02 2-way
- 03 3-way
- 04 4-way
- ...

Plunger style
- D Chisel
- K Ball
- R Roller
- L Roller bearing

Switch position spacing
- 12 12 mm
- 16 16 mm

Spacing l_3
- 12 12 mm
- 16 16 mm
- 24 24 mm
- 30 30 mm

Optional Function indicator
- FD 6...60 V AC/DC
- FE 90...250 V AC/DC

Optional Male
- S80R 5-pin, right
- S80L 5-pin, left
- S80S 5-pin, right and left
- S90R 12-pin, right
- S90L 12-pin, left
- S90S 12-pin, right and left
- S4R-I 4-pin, right only for IO-Link
- S4L-I 4-pin, left only for IO-Link

Position switches with safety switch positions	SERIES F 60 COMPLIANT WITH DIN 43693
Plunger material	Stainless steel, contact surfaces induction-hardened
Housing material	Cast aluminum, corrosion-resistant, anodized finish
Connection type	M16 x 1.5 for cable gland or connector
Ambient temperature	–5...+85 °C
Degree of protection as per IEC 60529	IP67
Approval/Conformity	CE
Productview and installation	Page 722

Ordering example:

BNS 813-F_-60-18_-__-____

Plunger style
- D Chisel
- K Ball
- R Roller
- L Roller bearing
- E Chisel with wiper plate

Switch elements
- 3 BSE 61 Approach direction parallel to mounting surface
- 5 BSE 61 Approach direction 90° to mounting surface
- 6 BSE 85 Approach direction parallel to mounting surface
- 7 BSE 85 Approach direction 90° to mounting surface

Optional Function indicator
- FD 6...60 V AC/DC (for BSE 61)
- FE 90...250 V AC/DC (for BSE 61)
- FC 6...24 V DC (for BSE 85)

Optional Male
- S80R 5-pin, right
- S80L 5-pin, left

Multiple position limit switches with safety switch positions	SERIES 100 COMPLIANT WITH DIN 43697
Plunger material	Stainless steel, contact surfaces induction-hardened
Housing material	Cast aluminum, corrosion-resistant, anodized finish
Connection type	M25 x 1.5 for cable gland or connector
Ambient temperature	–5...+85 °C
Degree of protection as per IEC 60529	IP67
Approval/Conformity	CE
Productview and installation	Page 719

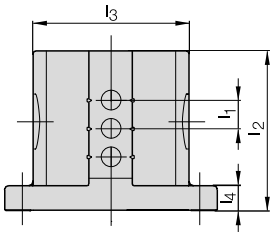

Available sizes

Number of plungers		2	3	4	5	6	8	10	12
Dimension l_2 with	Dimension l_1 = 12 mm	70	80	90	105	120	140	170	200
	Dimension l_3	88	88	88	88	88	80	80	80
	Dimension l_4	14	14	14	14	14	20	20	20
	Dimension l_1 = 16 mm	70	90	105	120	140	170	200	240
	Dimension l_3	88	88	88	88	80	80	80	80
	Dimension l_4	14	14	14	14	20	20	20	20
No. of connectors *	S80 without FD/FE	1	1	2	2	2			
	S80 with FD/FE	1	2	2	3	3			
	S90 without FD/FE	1	1	1	1	1	1	1	2
	S90 with FD/FE	1	1	1	1	1	1	2	2

Dimensions in mm
* No. of connectors with BSE 85 on request.

Ordering example:

BNS 813-D__-____-100-__-__-__-___-____

Number of plungers
02 2-way
03 3-way
04 4x ...

Plunger style
D Chisel
K Ball
R Roller
L Roller bearing
E Chisel with wiper plate

Switch position spacing
12 12 mm
16 16 mm

Switch elements
10 remaining switch positions BSE 30.0
12 only BSE 61
20 BSE 85 remaining switch positions BSE 30.0
22 only BSE 85

Safety switching element
Number starting from flange

Optional Function indicator
FD 6...60 V AC/DC (for BSE 30.0 and BSE 61)
FE 90...250 V AC/DC (for BSE 30.0 and BSE 61)
FC 6...24 V DC (only for BSE 85)

Optional Male
S80R 5-pin, right
S80L 5-pin, left
S80S 5-pin, right and left
S90R 12-pin, right
S90L 12-pin, left
S90S 12-pin, right and left

Multiple position limit switches with safety switch positions	SERIES 62
Plunger material	Stainless steel, contact surfaces induction-hardened
Housing material	Cast aluminum, corrosion-resistant, anodized finish
Connection type	M20 x 1.5 for cable gland or connector
Ambient temperature	–5...+85 °C
Degree of protection as per IEC 60529	IP67
Approval/Conformity	CE
Productview and installation	Page 720

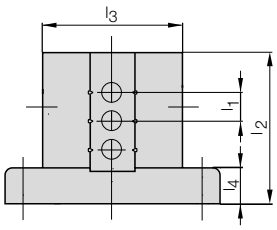

Available sizes

Number of plungers		2	3	4	5	6	8	10
Dimension l_2 with	Dimension l_1 = 12 mm	64	72	84	96	112	130	160
	Dimension l_3	88	88	88	88	88	80	80
	Dimension l_4	14	14	14	14	14	20	20
	Dimension l_1 = 16 mm	64	84	96	112	130	160	192
	Dimension l_3	88	88	88	88	80	80	80
	Dimension l_4	14	14	14	14	20	20	20
No. of connectors *	S80 without FD/FE	1	1	2	2	2		
	S80 with FD/FE	1	2	2	3	3		
	S90 without FD/FE	1	1	1	1	1	1	2
	S90 with FD/FE	1	1	1	1	1	2	2

Dimensions in mm
* No. of connectors with BSE 85 on request.

Ordering example:

BNS 813-D__-____-62-__-__-__-____

Number of plungers
02 2-way
03 3-way
04 4x ...

Plunger style
D Chisel
K Ball
R Roller
L Roller bearing
E Chisel with wiper plate

Switch position spacing
12 12 mm
16 16 mm

Switch elements
10 BSE 61 remaining switch positions BSE 30.0
12 only BSE 61
20 BSE 85 remaining switch positions BSE 30.0
22 only BSE 85

Safety switch element
Number starting from flange

Optional Function indicator
FD 6...60 V AC/DC (for BSE 30.0 and BSE 61)
FE 90...250 V AC/DC (for BSE 30.0 and BSE 61)
FC 6...24 V DC (only for BSE 85)

Optional Male
S80R 5-pin, right
S80L 5-pin, left
S80S 5-pin, right and left
S90R 12-pin, right
S90L 12-pin, left
S90S 12-pin, right and left

Do you need more details? Our Product Finder at www.balluff.com provides you with product-specific information, including technical drawings, data sheets, user guides and more for each individual product. All items are available for download.

Multiple position limit switches with safety switch positions	**SERIES 61**
Plunger material	Stainless steel, contact surfaces induction-hardened
Housing material	Cast aluminum, corrosion-resistant, anodized finish
Connection type	M20 x 1.5 for cable gland or connector
Ambient temperature	–5...+85 °C
Degree of protection as per IEC 60529	IP67
Approval/Conformity	CE
Productview and installation	Page 720

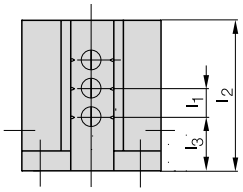

Available sizes

Number of Plunger	Plunger-spacing Dimension	Housing B Standard Dimension		Housing B Dimension		Housing C Dimension		No. of connectors * S80 without FD/FE	No. of connectors * S80 with FD/FE	No. of connectors * S90 without FD/FE	No. of connectors * S90 with FD/FE
	l_1	l_2	l_3	l_2	l_3	l_2	l_3				
2	12	36	12	60	30	48 60	24 30	1	1	1	1
3	12	48	12	60	24	60	24	1	2	1	1
4	12	60	12					2	2	1	1
5	12	72	12					2	3	1	1
6	12	84	12					2	3	1	1
2	16	48	16	60	30	60	30	1	1	1	1
3	16	72	16					1	2	1	1
4	16	84	16					2	2	1	1

Dimensions in mm
* No. of connectors with BSE 85 on request.

Ordering example:

BNS 813-___-____-61-__-___-___-_____

Housing style
B Standard 2× M20 x 1.5 side
B 3× M20 x 1.5 side and in flange
C 2× M20 x 1.5 side and cable gland in flange

Number of plungers
02 2-way
03 3-way
04 4x ...

Plunger style
D Chisel
K Ball
R Roller
L Roller bearing
E Chisel with wiper plate

Switch position spacing
12 12 mm
16 16 mm

Spacing l_3
A 12 mm
B 16 mm
C 24 mm
D 30 mm

Switch elements
10 BSE 61 remaining switch positions BSE 30.0
12 only BSE 61
20 BSE 85 remaining switch positions BSE 30.0
22 only BSE 85

Safety switch element
Number starting from flange

Optional Function indicator
FD 6...60 V AC/DC (for BSE 30.0 and BSE 61)
FE 90...250 V AC/DC (for BSE 30.0 and BSE 61)
FC 6...24 V DC (only for BSE 85)

Optional Male
S80R 5-pin, right
S80L 5-pin, left
S80S 5-pin, right and left
S90R 12-pin, right
S90L 12-pin, left
S90S 12-pin, right and left

Multiple position limit switches with safety switch positions	SERIES 72
Plunger material	Stainless steel, contact surfaces induction-hardened
Housing material	Cast aluminum, corrosion-resistant, anodized finish
Connection type	M25 x 1.5 for cable gland or connector
Ambient temperature	–5...+85 °C
Degree of protection as per IEC 60529	IP67
Approval/Conformity	CE
Productview and installation	Page 721

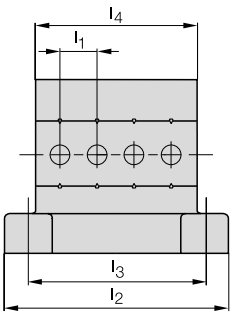

Available sizes

Number of plungers		2	3	4	5	6	8	10
Dimension l_2 with	l_1 = 12 mm	84	84	100	116	132	164	180
Dimension l_3 with	l_1 = 12 mm	66	66	82	98	114	146	162
Dimension l_4 with	l_1 = 12 mm	54	54	68	84	100	132	148
Dimension l_2 with	l_1 = 16 mm	84	100	116	132	148	180	212
Dimension l_3 with	l_1 = 16 mm	66	82	98	114	130	162	194
Dimension l_4 with	l_1 = 16 mm	54	68	84	100	116	148	180
No. of connectors *	S80 without FD/FE	1	1	2	2	2		
	S80 with FD/FE	1	2	2	3	3		
	S90 without FD/FE	1	1	1	1	1	1	1
	S90 with FD/FE	1	1	1	1	1	1	2

Dimensions in mm
* No. of connectors with BSE 85 on request.

Ordering example:

BNS 813-B__-___-72-__-__-__-____

Number of plungers
02 2-way
03 3-way
04 4x ...

Plunger style
D Chisel
K Ball
R Roller
L Roller bearing
E Chisel with wiper plate

Switch position spacing
12 12 mm
16 16 mm

Switch elements
10 BSE 61 remaining switch positions BSE 30.0
12 only BSE 61
20 BSE 85 remaining switch positions BSE 30.0
22 only BSE 85

Safety switch element
Number starting from flange

Optional Function indicator
FD 6...60 V AC/DC (for BSE 30.0 and BSE 61)
FE 90...250 V AC/DC (for BSE 30.0 and BSE 61)
FC 6...24 V DC (only for BSE 85)

Optional Male
S80R 5-pin, right
S80L 5-pin, left
S80S 5-pin, right and left
S90R 12-pin, right
S90L 12-pin, left
S90S 12-pin, right and left

Do you need more details? Our Product Finder at www.balluff.com provides you with product-specific information, including technical drawings, data sheets, user guides and more for each individual product. All items are available for download.

Multiple position limit switches with safety switch positions and quick-change plunger block	**SERIES 100 COMPLIANT WITH DIN 43697**
Plunger material	Stainless steel, contact surfaces induction-hardened
Housing material	Cast aluminum, corrosion-resistant, anodized finish
Connection type	M25 x 1.5 for cable gland or connector
Ambient temperature	–5...+85 °C
Degree of protection as per IEC 60529	IP67
Approval/Conformity	CE
Productview and installation	Page 721

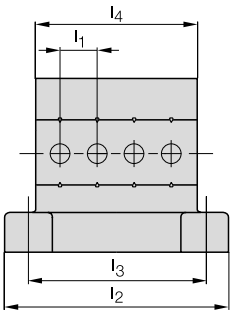

Available sizes

Number of plungers		2	3	4	5	6
Dimension l_2 with	l_1 = 12 mm	70	80	90	105	120
	l_1 = 16 mm	70	90	105	120	
No. of connectors *	S80 without FD/FE	1	1	2	2	2
	S80 with FD/FE	1	2	2	3	3
	S90 without FD/FE	1	1	1	1	1
	S90 with FD/FE	1	1	1	1	1

Dimensions in mm
* No. of connectors with BSE 85 on request.

Ordering example:

BNS 823-D__-____-100-__-__-__-___-____

Number of plungers
02 2-way
...
06 6x ...

Plunger style
D Chisel
K Ball
R Roller
L Roller bearing

Switch position spacing
12 12 mm
16 16 mm

Switch elements
10 BSE 61 remaining switch positions BSE 30.0
12 only BSE 61
20 BSE 85 remaining switch positions BSE 30.0
22 only BSE 85

Safety switch element
Number starting from flange

Optional Function indicator
FD 6...60 V AC/DC (for BSE 30.0 and BSE 61)
FE 90...250 V AC/DC (for BSE 30.0 and BSE 61)
FC 6...24 V DC (only for BSE 85)

Optional Male
S80R 5-pin, right
S80L 5-pin, left
S80S 5-pin, right and left
S90R 12-pin, right
S90L 12-pin, left
S90S 12-pin, right and left

Multiple position limit switches with safety switch positions	**SERIES 61**
Plunger material	Stainless steel, contact surfaces induction-hardened
Housing material	Cast aluminum, corrosion-resistant, anodized finish
Connection type	M20 x 1.5 for cable gland or connector
Ambient temperature	–5...+85 °C
Degree of protection as per IEC 60529	IP67
Approval/Conformity	CE
Productview and installation	Page 722

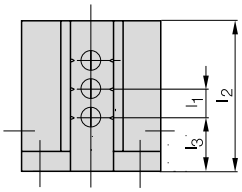

Available sizes

Number of Plunger	Plunger-spacing Dimension	Housing B Standard Dimension		Housing B Dimension		Housing C Dimension		No. of connectors * S80 without FD/FE	No. of connectors * S80 with FD/FE	No. of connectors * S90 without FD/FE	No. of connectors * S90 with FD/FE
	l_1	l_2	l_3	l_2	l_3	l_2	l_3				
2	12	36	12	60	30	48 60	24 30	1	1	1	1
3	12	48	12	60	24	60	24	1	2	1	1
4	12	60	12					2	2	1	1
5	12	72	12					2	3	1	1
6	12	84	12					2	3	1	1
2	16	48	16	60	30	60	30	1	1	1	1
3	16	72	16					1	2	1	1
4	16	84	16					2	2	1	1

Dimensions in mm
* No. of connectors with BSE 85 on request.

Ordering example:

BNS 823-___-____-61-__-___-___-____

Housing style
- B Standard 2× M20 x 1.5 side
- B 3× M20 x 1.5 side and in flange
- C 2× M20 x 1.5 side and cable gland in flange

Number of plungers
- 02 2-way
- 03 3-way
- 04 4x ...

Plunger style
- D Chisel
- K Ball
- R Roller
- L Roller bearing

Switch position spacing
- 12 12 mm
- 16 16 mm

Spacing l_3
- A 12 mm
- B 16 mm
- C 24 mm
- D 30 mm

Switch elements
- 10 BSE 61 remaining switch positions BSE 30.0
- 12 only BSE 61
- 20 BSE 85 remaining switch positions BSE 30.0
- 22 only BSE 85

Safety switch element
- Number starting from flange

Optional Function indicator
- FD 6...60 V AC/DC (for BSE 30.0 and BSE 61)
- FE 90...250 V AC/DC (for BSE 30.0 and BSE 61)
- FC 6...24 V DC (only for BSE 85)

Optional Male
- S80R 5-pin, right
- S80L 5-pin, left
- S80S 5-pin, right and left
- S90R 12-pin, right
- S90L 12-pin, left
- S90S 12-pin, right and left

Do you need more details? Our Product Finder at www.balluff.com provides you with product-specific information, including technical drawings, data sheets, user guides and more for each individual product. All items are available for download.

Position switches with positive opening	SERIES 99 AND 100
Plunger material	Stainless steel, contact surfaces induction-hardened
Housing material	Cast aluminum, corrosion-resistant, anodized finish
Connection type	Cable gland (M12 x 1.5 Series 99, M16 × 1.5 Series 100) or connector
Ambient temperature	–5...+85 °C
Degree of protection as per IEC 60529	IP67
Approval/Conformity	CE
Productview and installation	Page 722

Ordering example:

BNS 813-__ __ __-__-__ __-__ __-__ __ __

Model
99 Series 99
100 Series 100

Plunger style
D Chisel
K Ball
R Roller
E Chisel with wiper plate

Switch elements
68 BSE 86 Approach direction 90° to mounting surface
69 BSE 86 Approach direction parallel to mounting surface

Optional Function indicator
FC 6...24 V DC

Optional Male
S80 5-pin

Multiple position limit switches with positive opening	SERIES 46
Plunger material	Stainless steel, contact surfaces induction-hardened
Housing material	Cast aluminum, corrosion-resistant, anodized finish
Connection type	M16 x 1.5 for cable gland or connector
Ambient temperature	–5...+85 °C
Degree of protection as per IEC 60529	IP67
Approval/Conformity	CE
Productview and installation	Page 723

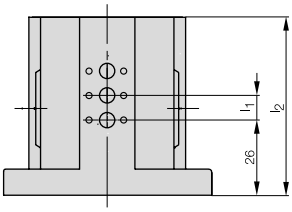

Available sizes

Number of plungers		2	3	4	5	6	8	10
Dimension l_2 with	Dimension l_1 = 8 mm	49	59	64	72	80	96	112
	Dimension l_3	54	54	54	54	54	50	50
	Dimension l_1 = 10 mm	49	59	72	80	89	112	129
	Dimension l_3	54	54	54	54	50	50	50
Number of connectors	S80 without FC	1	1	2	2	2	3	3
	S80 with FC	1	2	2	3	3		

Dimensions in mm
Size 12-x with 8 mm spacing on request.

Ordering example:

BNS 813-B__-____-46-__-__-__-____

Number of plungers
02 2-way
03 3-way
04 4x ...

Plunger style
D Chisel
K Ball
R Roller
E Chisel with wiper plate

Switch position spacing
08 8 mm
10 10 mm

Switch elements
60 BSE 86, remaining switch positions BSE 69.1
62 BSE 86, remaining switch positions BSE 73.1
69 all BSE 86

Safety switch element
Number starting from flange

Optional Function indicator
FC 6...24 V DC

Optional Male
S80R 5-pin, right
S80L 5-pin, left
S80S 5-pin, right and left

Position switch with positive opening	**SERIES 40**
Plunger material	Stainless steel, contact surfaces induction-hardened
Housing material	Cast aluminum, corrosion-resistant, anodized finish
Connection type	M16 x 1.5 for cable gland or connector
Ambient temperature	–5...+85 °C
Degree of protection as per IEC 60529	IP67
Approval/Conformity	CE
Productview and installation	Page 723

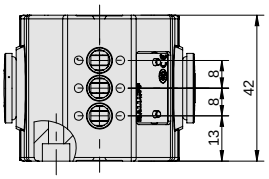

Available sizes

Number of plungers	2	3	4	5	6
Dimension l_1	34	42	50	58	66
S80 without FC	1	1	2	2	2
S80 with FC	1	2	2		

Dimensions in mm

Ordering example:

BNS 813-B__-____-40-__-__-__-____

Number of plungers
02 2-way
03 3-way
04 4x ...

Plunger style
D Chisel
K Ball
R Roller
E Chisel with wiper plate

Switch position spacing
08 8 mm

Switch elements
60 BSE 86, remaining switch positions BSE 69.1
62 BSE 86, remaining switch positions BSE 73.1
69 all BSE 86

Safety switch element
Number starting from flange

Optional Function indicator
FC 6...24 V DC

Optional Male
S80R 5-pin, right
S80L 5-pin, left
S80S 5-pin, right and left

High-temperature position switches	SERIES 99 AND 100
Plunger material	Stainless steel, contact surfaces induction-hardened
Housing material	Cast aluminum, corrosion-resistant, anodized finish
Connection type	M12 x 1.5 or M16 x 1.5 for cable gland
Ambient temperature	–5...+150 °C (–5...+180 °C 10 h/day)
Degree of protection as per IEC 60529	IP67
Approval/Conformity	CE
Productview and installation	Page 724

Ordering example:

BNS 819-_ _ _-_-15

Model
99 Series 99
100 Series 100

Plunger style
D Chisel
K Ball
R Roller

High-temperature position switches	SERIES 46 AND 40
Plunger material	Stainless steel, contact surfaces induction-hardened
Housing material	Cast aluminum, corrosion-resistant, anodized finish
Connection type	M12 x 1.5 or M16 x 1.5 for cable gland
Ambient temperature	–5...+150 °C (–5...+180 °C 10 h/day)
Degree of protection as per IEC 60529	IP67
Approval/Conformity	CE
Productview and installation	Page 724

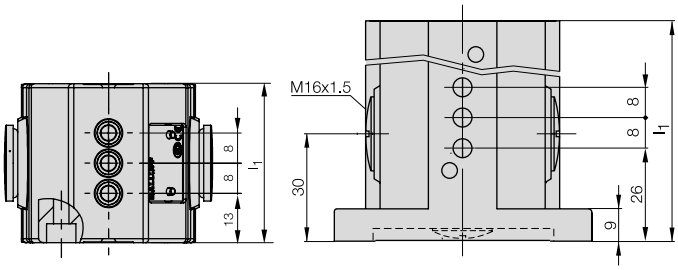

Available sizes

Number of plungers	2	3
Dimension l_1	49	59

Dimensions in mm

Ordering example:

BNS 819-B___-_ 08- ___-15

Number of plungers
02 2-way
03 3-way

Plunger style
D Chisel
K Ball
R Roller

Model
40
46

PNP NO	**BES01FE** BES 516-346-H2-Y-S4	**BES01FF** BES 516-346-H2-Y-S49	
PNP NC	**BES01EW** BES 516-341-H2-Y-S4		
PNP changeover			
NPN NO			
NPN NC			
Dimension	54 x 22 x 48 mm	54 x 22 x 48 mm	
Design	block style	block style	
Installation	Flush	Flush	
Range	5 mm	5 mm	
Switching frequency	500 Hz	500 Hz	
Housing material	Aluminum	Aluminum	
Sensing surface, material	PA 12	PA 12	
Connection	Connector, M12x1 connector, 4-pin	Connector, M12x1 connector, 4-pin	
Operating voltage Ub	10...30 VDC	10...30 VDC	
Ambient temperature	–25...+70 °C	–25...+70 °C	
Degree of protection	IP67	IP67	
Approval/Conformity	CE, EAC	CE, EAC	
Productview and installation	Page 725	Page 725	

Wiring diagrams

PNP
NO

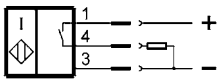

NO

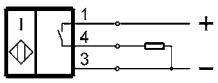

NPN
NO

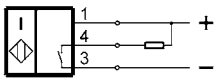

NC

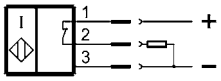

NC

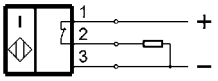

NC

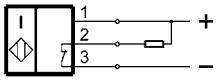

Complementary

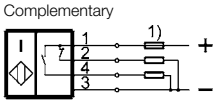

	BES01FC BES 516-346-H2-Y		
	BES01EU BES 516-341-H2-Y		
		BES017M BES 516-161-H3-L	
	BES01ZK BES 516-344-H2-Y		
	BES01ET BES 516-340-H2-Y		
	54 x 22 x 48 mm	74 x 28 x 60.5 mm	
	block style	block style	
	Flush	Flush	
	5 mm	7 mm	
	500 Hz	300 Hz	
	Aluminum	Aluminum	
	PA 12	PA 12	
	Screw terminal	Screw terminal	
	10...30 VDC	10...30 VDC	
	–25...+70 °C	–25...+70 °C	
	IP67	IP67	
	CE, EAC	CE, EAC	
	Page 725	Page 725	

Inductive multiple position switches	SERIES 602-11 COMPLIANT WITH DIN 43697
Housing material	Cast aluminum, corrosion-resistant, anodized finish
Connection type	M25 x 1.5 for cable gland or connector
Ambient temperature	–25...+70 °C
Degree of protection as per IEC 60529	IP67
Approval/Conformity	CE
Productview and installation	Page 725

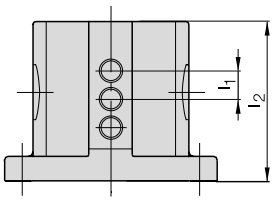

Available sizes

Number of plungers		2	3	4	5	6	8	10	12
Dimension l_2 with	Dimension l_1= 12 mm	70	80	90	105	120	140	170	200
	Dimension l_4	88	88	88	88	88	80	80	80
	Dimension l_5	14	14	14	14	14	20	20	20
	Dimension l_1= 16 mm	70	90	105	120	140	170	200	240
	Dimension l_4	88	88	88	88	80	80	80	80
	Dimension l_5l	14	14	14	14	20	20	20	20
Number of connectors	S80	on request							
	S90	on request							
Dimension l_3	4 mm for inductive switch elements with sensing head 10 mm								
	2 mm for inductive switch elements with sensing head 15.5 mm								

Dimensions in mm

Ordering example:

BNS 816-B___-____-___-602-11-____

Number of plungers
02 2-way
03 3-way
04 4x ...

Code for switch elements
(see table Seite 35)

Switch position spacing
12 12 mm
16 16 mm

Optional Male
S80R 5-pin, right
S80L 5-pin, left
S80S 5-pin, right and left
S90R 12-pin, right
S90L 12-pin, left
S90S 12-pin, right and left

Inductive multiple position switches	BNS 816-B_ _-_ _ _-_ _-610/611/612/613-11-_ _ _
Housing material	Cast aluminum, corrosion-resistant, anodized finish
Connection type	M20 x 1.5 for cable gland or connector
Ambient temperature	–25...+70 °C
Degree of protection as per IEC 60529	IP67
Approval/Conformity	CE
Productview and installation	Page 726

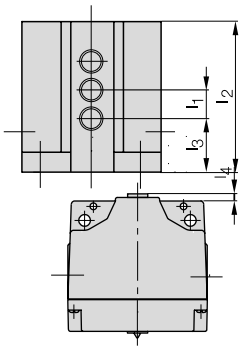

Available sizes

Number of switch-positions	Number of Male S80/S90	Switch-position-spacing Dimen-sion	Series 610 Housing B Standard Dimension		Series 611 Housing B Standard Dimension		Series 612 Housing B Dimension		Series 612 Housing C Dimension		Series 613 Housing B Housing C Dimension	
		l_1	l_2	l_3	l_2	l_3	l_2	l_3	l_2	l_3	l_2	l_3
2	on request	12	36	12					48	24	60	30
3		12	48	12			60	24	60	24		
4		12	60	12								
5		12	72	12								
6		12	84	12								
2		16			48	16					60	30
3		16			72	16						
4		16			84	16						

Dimensions in mm
Dimension l_4 = 4 mm for inductive switch elements with sensing head Ø 10 mm
Dimension l_4 = 2 mm for inductive switch elements with sensing head Ø15.5 mm

Ordering example:

BNS 816-_ _ _-_ _ _ _-_ _-_ _ _ _-11-_ _ _ _

Housing style
B Standard 2 × M20 x 1.5 side
B 3 × M20 x 1.5 side and in flange
C 2 × M20 x 1.5 side and cable gland in flange

Number of plungers
02 2-way
03 3-way
04 4-way

Code for switch elements
(see table Seite 35)

Switch position spacing
12 12 mm
16 16 mm

Spacing l_3
610 12 mm
611 16 mm
612 24 mm
613 30 mm

Optional Male
S80R 5-pin, right
S80L 5-pin, left
S80S 5-pin, right and left
S90R 12-pin, right
S90L 12-pin, left
S90S 12-pin, right and left

Do you need more details? Our Product Finder at www.balluff.com provides you with product-specific information, including technical drawings, data sheets, user guides and more for each individual product. All items are available for download.

Inductive multiple position switches	**SERIES 605-11**
Housing material	Cast aluminum, corrosion-resistant, anodized finish
Connection type	M25 x 1.5 for cable gland or connector
Ambient temperature	–25...+70 °C
Degree of protection as per IEC 60529	IP67
Approval/Conformity	CE
Productview and installation	Page 726

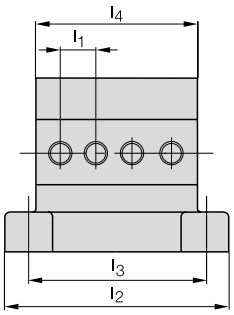

Available sizes

Number of switching positions		2	3	4	5	6	7	8	10	12
Dimension l_2 with	Dimension l_1 = 12 mm	84	84	100	116	132	148	164	180	
Dimension l_3 with	Dimension l_1 = 12 mm	66	66	82	98	114	130	146	162	
Dimension l_4 with	Dimension l_1 = 12 mm	54	54	68	84	100	164	132	148	
Dimension l_2 with	Dimension l_1 = 16 mm	84	100	116	132	148	146	180	212	224
Dimension l_3 with	Dimension l_1 = 16 mm	66	82	98	114	130	132	162	194	226
Dimension l_4 with	Dimension l_1 = 16 mm	54	68	84	100	116		148	180	212
Number of connectors	S80	on request								
	S90	on request								

Dimensions in mm

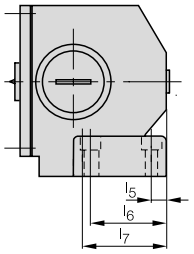

Dimensions when using inductive switch elements with sensing head Ø 10 mm	
Dimension l_2	10 mm
Dimension l_3	40 mm
Dimension l_4	43.5 mm

Dimensions when using inductive switch elements with sensing head Ø 15.5 mm	
Dimension l_2	8 mm
Dimension l_3	38 mm
Dimension l_4	41.5 mm

Dimensions in mm

Ordering example:

BNS 816-B__-____-___-605-11-____

Number of plungers
02 2-way
03 3-way
04 4x ...

Code for switch elements
(see table 7215)

Switch position spacing
12 12 mm
16 16 mm

Optional Male
S80R 5-pin, right
S80L 5-pin, left
S80S 5-pin, right and left
S90R 12-pin, right
S90L 12-pin, left
S90S 12-pin, right and left

Inductive multiple position switches	SERIES 603-11
Housing material	Cast aluminum, corrosion-resistant, anodized finish
Connection type	M16 x 1.5 for cable gland or connector
Ambient temperature	–25...+70 °C
Degree of protection as per IEC 60529	IP67
Approval/Conformity	CE
Productview and installation	Page 727

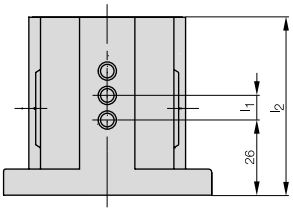

Available sizes

Number of switching positions		2	3	4	5	6	8	10
Dimension l_2 with	Dimension l_1 = 8 mm	49	59	64	72	80	96	112
	Dimension l_3 =	54	54	54	54	54	50	50
	Dimension l_1 = 10 mm	49	59	72	80	89	112	129
	Dimension l_3 =	54	54	54	54	50	50	50
Number of connectors	S80 on request							

Dimensions in mm
Size 12-x with 8 mm spacing on request.

Ordering example:

BNS 816-B__-____-___-603-11-____

Number of plungers
02 2-way
03 3-way
04 4x ...

Code for switch elements
TOB PNP, NO
TNB NPN, NO

Switch position spacing
08 8 mm
10 16 mm

Optional Male
S80R 5-pin, right
S80L 5-pin, left
S80S 5-pin, right and left

Do you need more details? Our Product Finder at www.balluff.com provides you with product-specific information, including technical drawings, data sheets, user guides and more for each individual product. All items are available for download.

Inductive multiple position switches	SERIES 650-11
Housing material	Cast aluminum, corrosion-resistant, anodized finish
Connection type	M16 x 1.5 for cable gland or connector
Ambient temperature	–25...+70 °C
Degree of protection as per IEC 60529	IP67
Approval/Conformity	CE
Productview and installation	Page 727

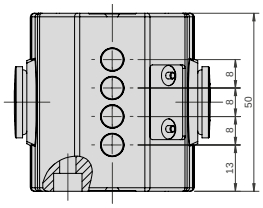

Available sizes

Number of switching positions	2	3	4	5	6
Dimension l_1	34	42	50	58	66
No. of connectors S80 on request					

Dimensions in mm

Ordering example:

BNS 816-B___-____-___-650-11-____

Number of plungers
02 2-way
03 3-way
04 4x ...

Code for switch elements
TOB PNP, NO
TNB NPN, NO

Switch position spacing
08 8 mm

Optional Male
S80R 5-pin, right
S80L 5-pin, left
S80S 5-pin, right and left

Inductive switch elements with sensing head Ø 10 mm, for use with switch position spacing 12 and 16 mm

Code	Order code for spare switch elements	Electrical version	Rated-switching distance s_n	Assured switching distance s_a
PA	BES 517-110	PNP, changeover, 10...60 V DC, short-circuit protected	2 mm	0...1.6 mm
NA	BES 517-108	NPN, changeover, 10...60 V DC, short-circuit protected	2 mm	0...1.6 mm
WS	BES 517-410	NO, up to 250 V AC	2 mm	0...1.6 mm
WO	BES 517-421	NC, up to 250 V AC	2 mm	0...1.6 mm
KHG	BES 517-560-H	2-wire, NO, 10...55 V DC, short-circuit protected	2 mm	0...1.6 mm
KHH	BES 517-561-H	2-wire, NC, 10...55 V DC, short-circuit protected	2 mm	0...1.6 mm
NG	BES 516-314-N	2-wire, NAMUR, 7.7...9 V DC	2 mm	0...1.6 mm

Inductive switch elements with sensing head Ø 15.5 mm, for use with switch position spacing 16 mm

Code	Order code for spare switch elements	Electrical version	Rated-switching distance s_n	Assured switching distance s_a
THA	BES 517-142-Y	PNP, changeover, 10...30 V DC, short-circuit protected	5 mm	0...4 mm
EJA	BES 517-463	NO, up to 250 V AC	5 mm	0...4 mm
AAA	BES 517-464	NC, up to 250 V AC	5 mm	0...4 mm

Hybrid switch element with mechanical plunger and inductive processing

Code	Order code for spare switch elements	Electrical version	Rated-switching distance s_n	Assured switching distance s_a
DH	BES 516-110-D	PNP, changeover, 10...30 V DC	More information on request!	

Position switch Series F60 compliant with DIN 43693

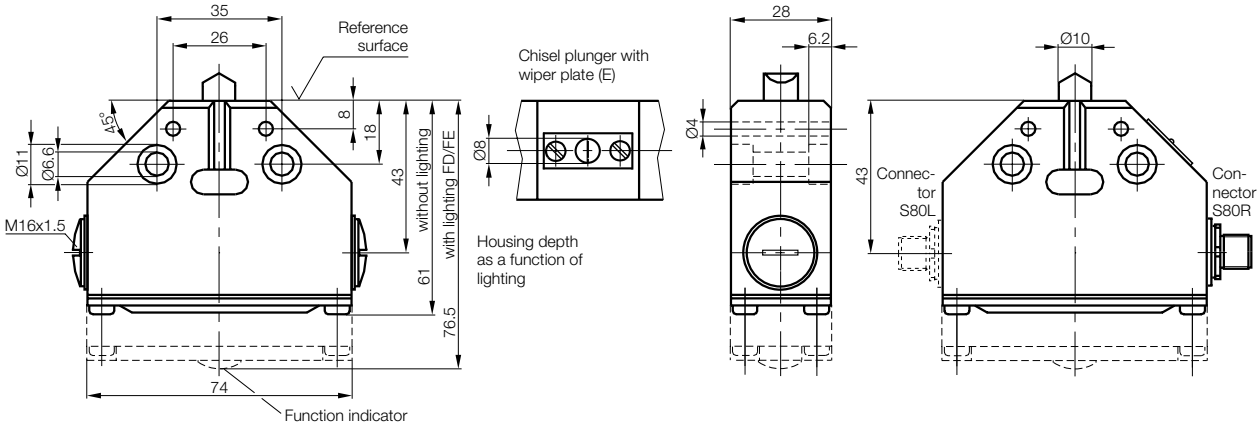

Assembly

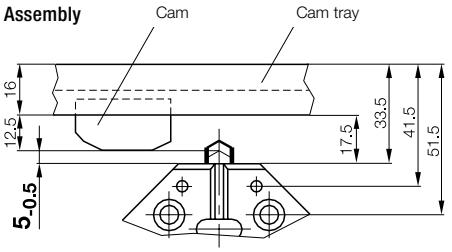

Attention!
To assure
the switching function
Dimension 5-0.5 especially
must be maintained.

Position switch Series 99 and 100

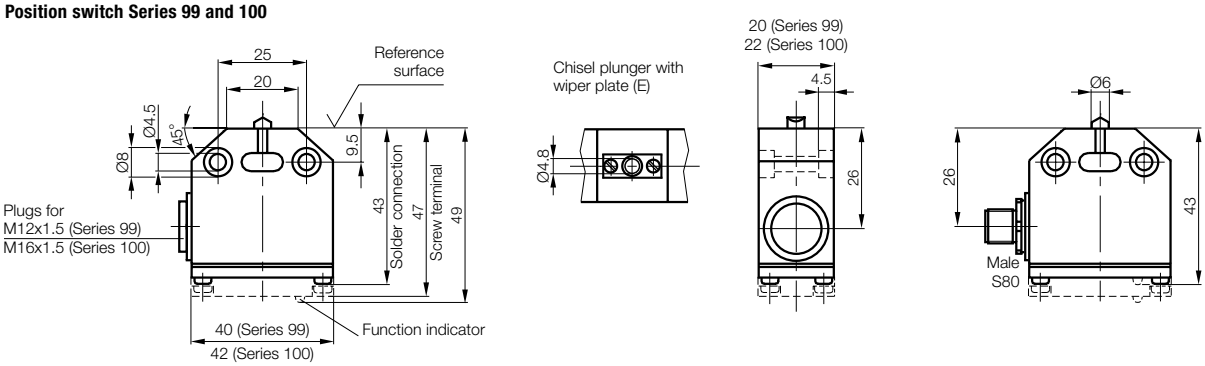

Assembly

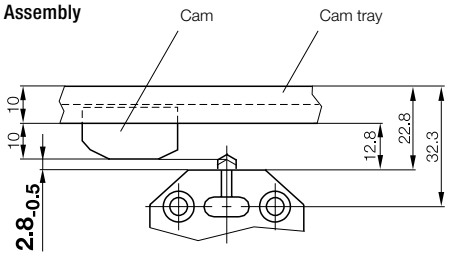

Attention!
To assure the switching function
dimension $2.8_{-0.5}$ especially must be
maintained.

Multiple position switches 100 compliant with DIN 43697

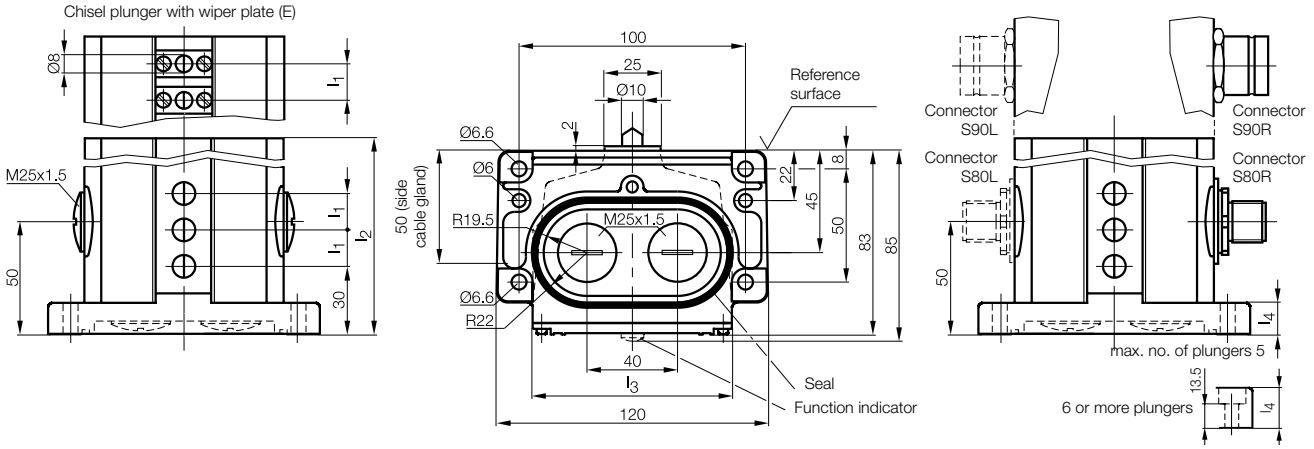

Assembly

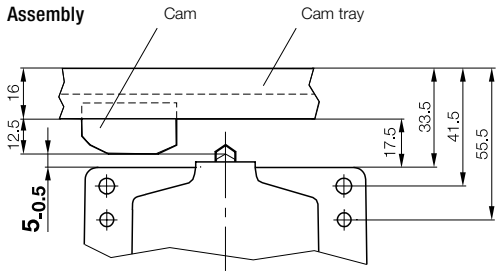

Attention!
To assure the switching function dimension $5_{-0.5}$ especially must be maintained.

Series 62 multiple position switch

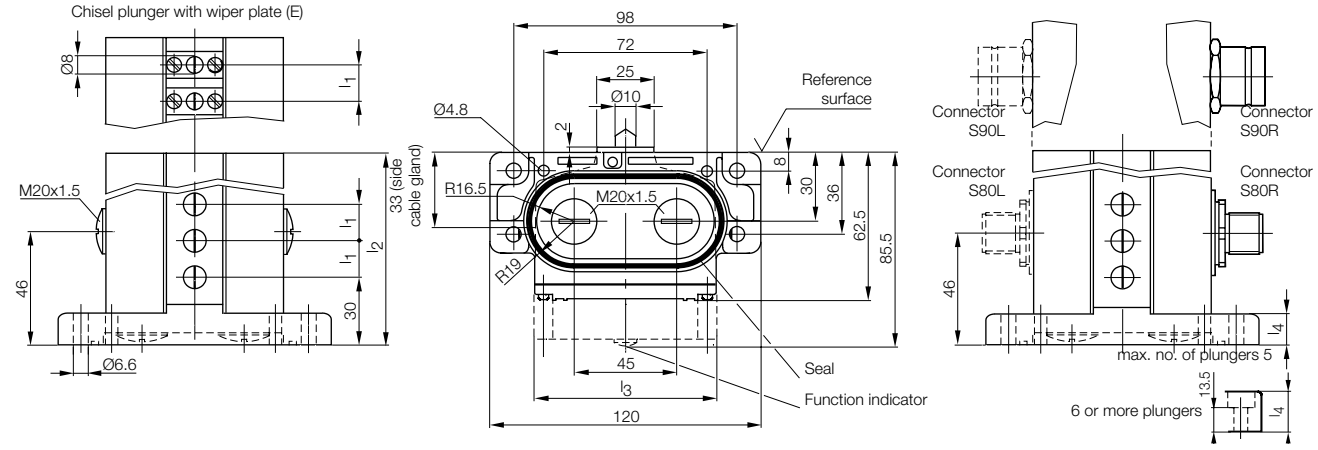

Assembly

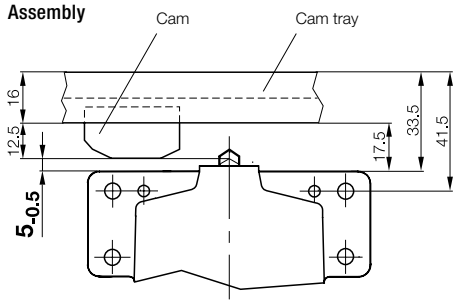

Attention!
To assure
the switching function
Dimension 5-0.5 especially
must be maintained.

Series 61 multiple position switch

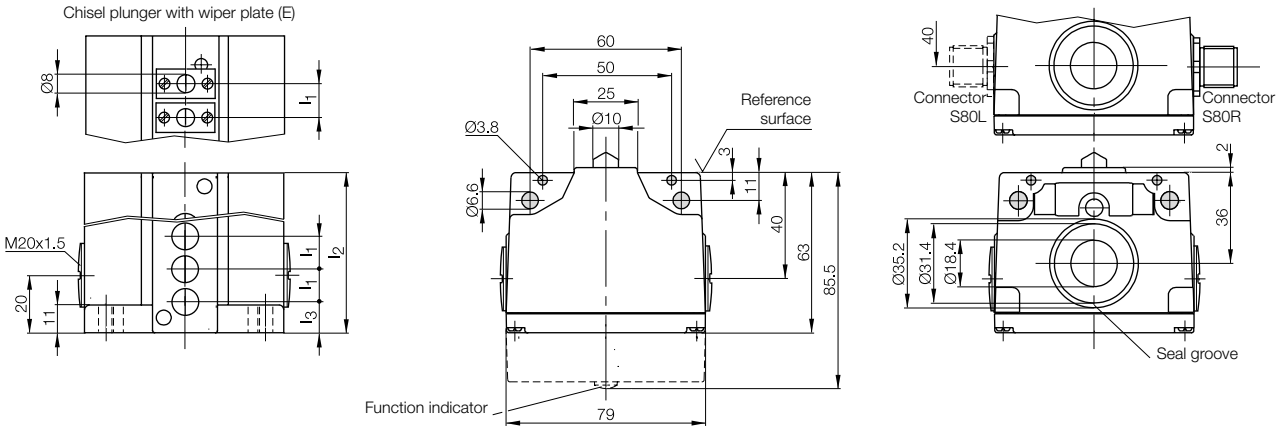

Assembly

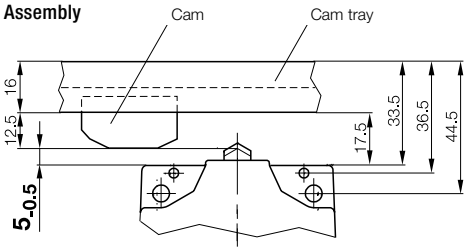

Attention!
To assure
the switching function
Dimension 5-0.5 especially
must be maintained.

Series 72 multiple position switch

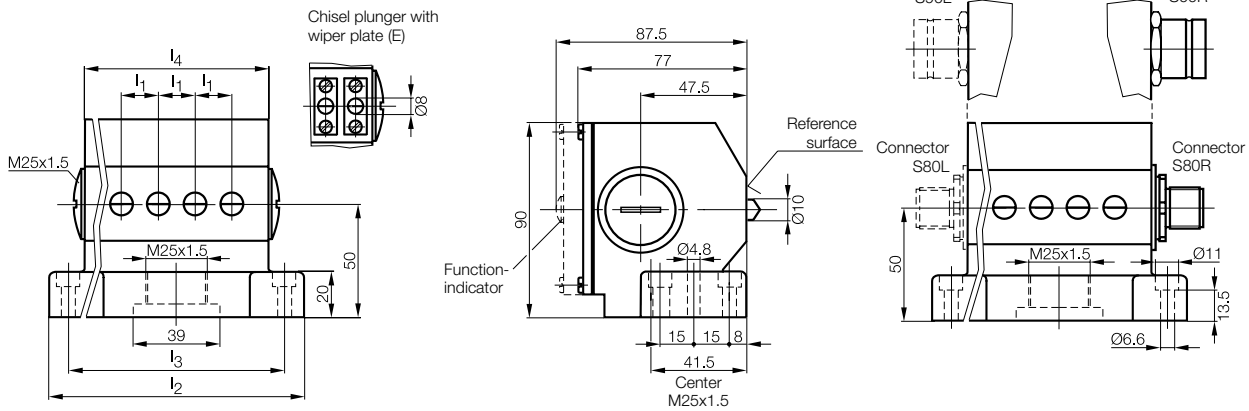

Assembly

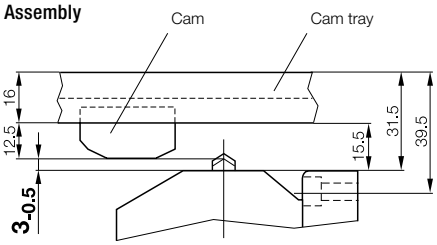

Attention!
To assure
the switching function
dimension 3-0.5 especially must be
maintained.

Series 46 multiple position switch

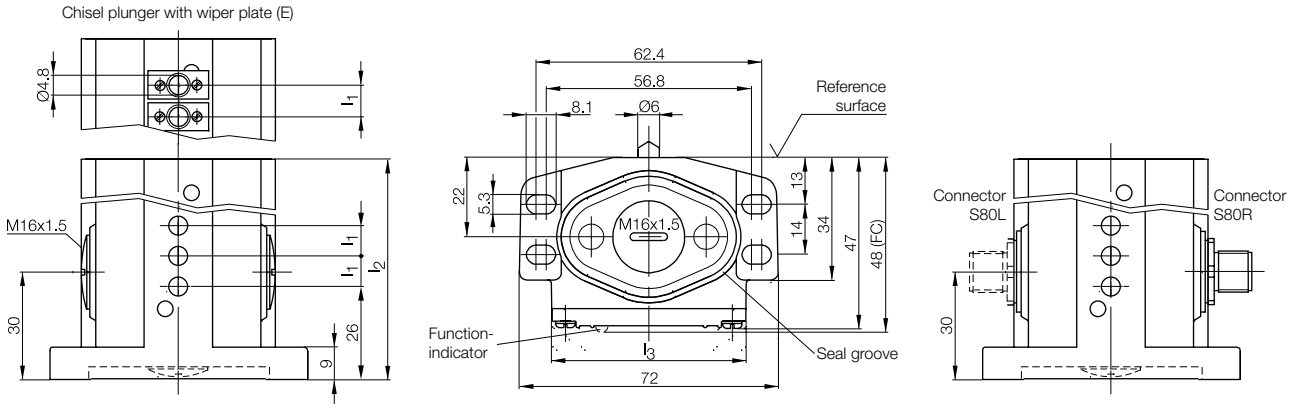

Assembly

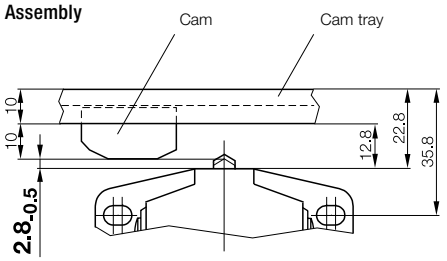

Attention!
To assure
the switching function
dimension 2.8-0.5 especially
must be maintained.

Series 40 multiple position switch

Standard:

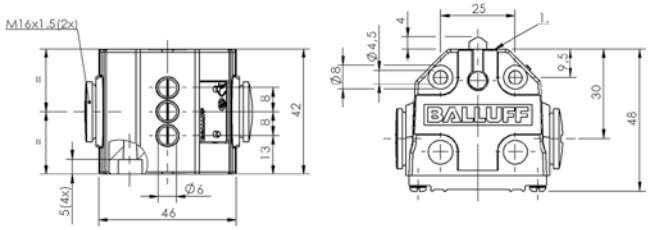

1) Reference edge

Chisel plunger with wiper plate:

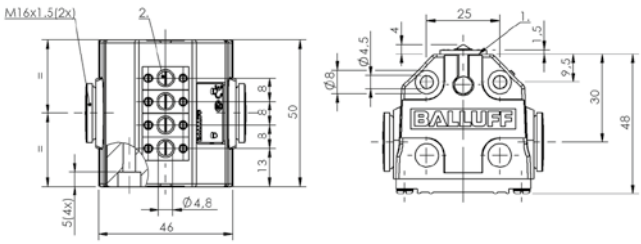

1) Reference edge
2) Anti-crystallization plunger

Connector left:

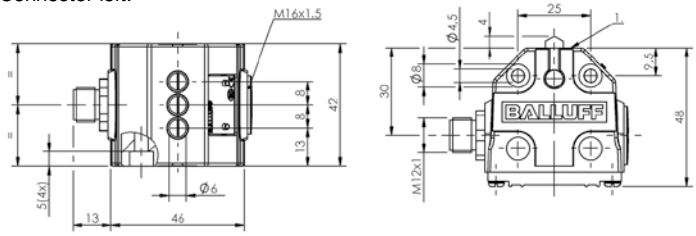

1) Reference edge

Assembly

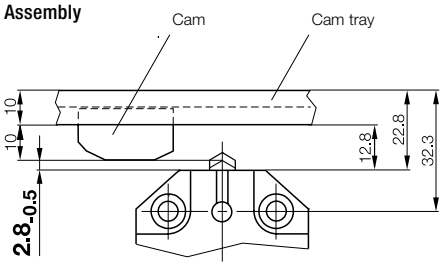

Attention!
To assure the switching function
dimension $2.8_{-0.5}$
especially must be maintained.

Multiple position switches with quick-change plunger block Series 100 compliant with DIN 43697

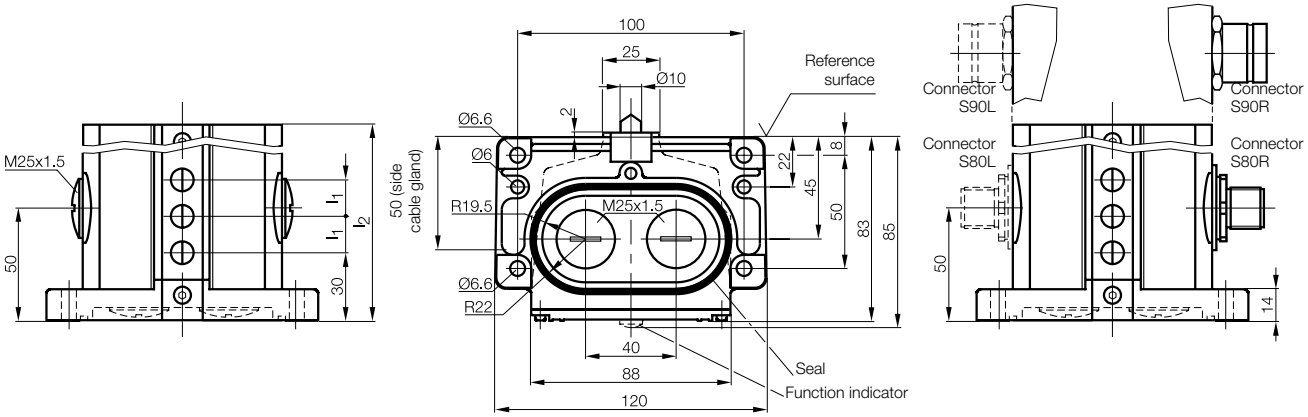

Assembly

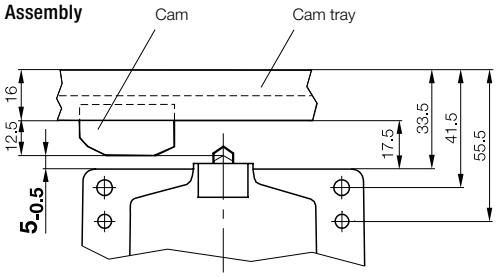

Attention!
To assure the switching function dimension $5_{-0.5}$ especially must be maintained.

Multiple position switches with quick-change plunger block Series 61

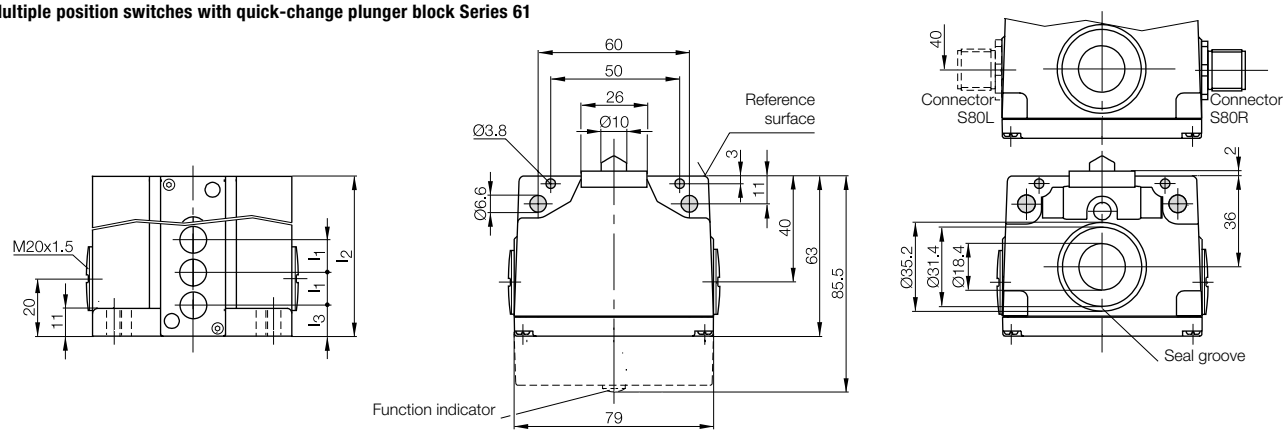

Assembly

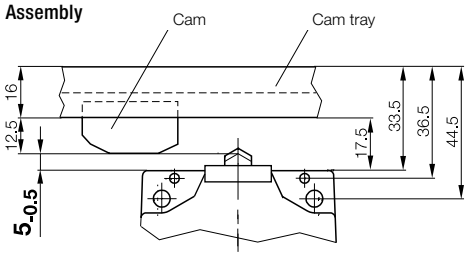

Attention!
To assure the switching function dimension $5_{-0.5}$ especially must be maintained.

Position switch with safety switch positions Series F60 DIN 43693

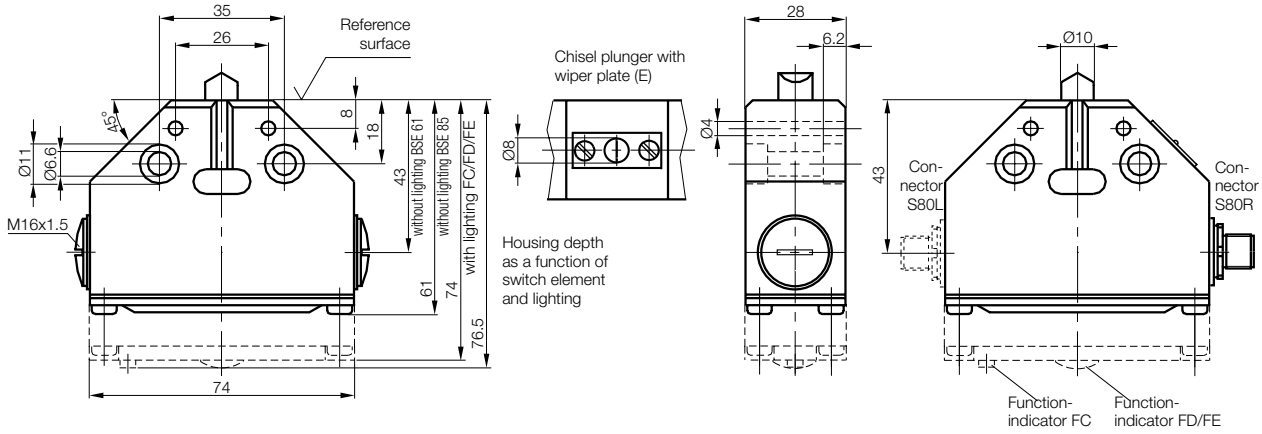

Assembly

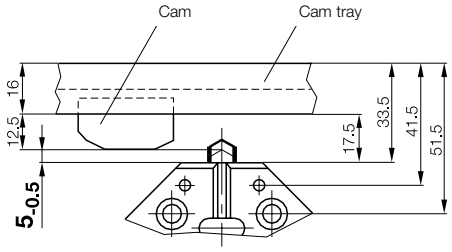

Attention!
To assure the switching function dimension $5_{-0.5}$ especially must be maintained.

Multiple position limit switches with safety switch positions Series 100 DIN 43697

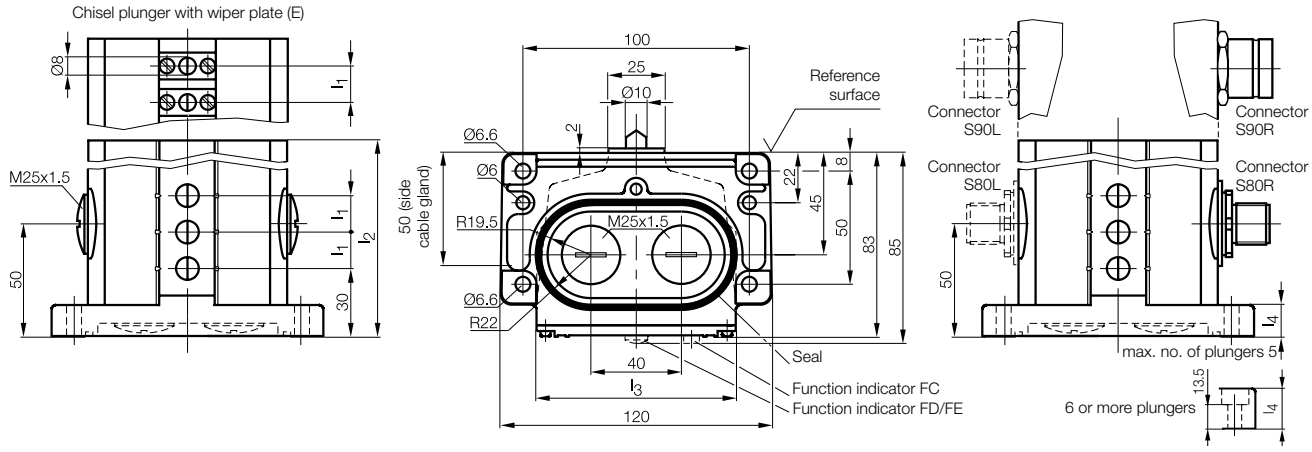

Assembly

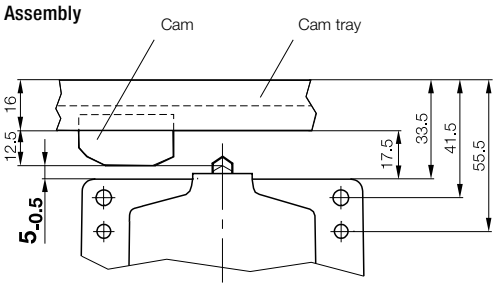

Attention!
To assure the switching function dimension $5_{-0.5}$ especially must be maintained.

Multiple position limit switches with safety switch positions Series 62

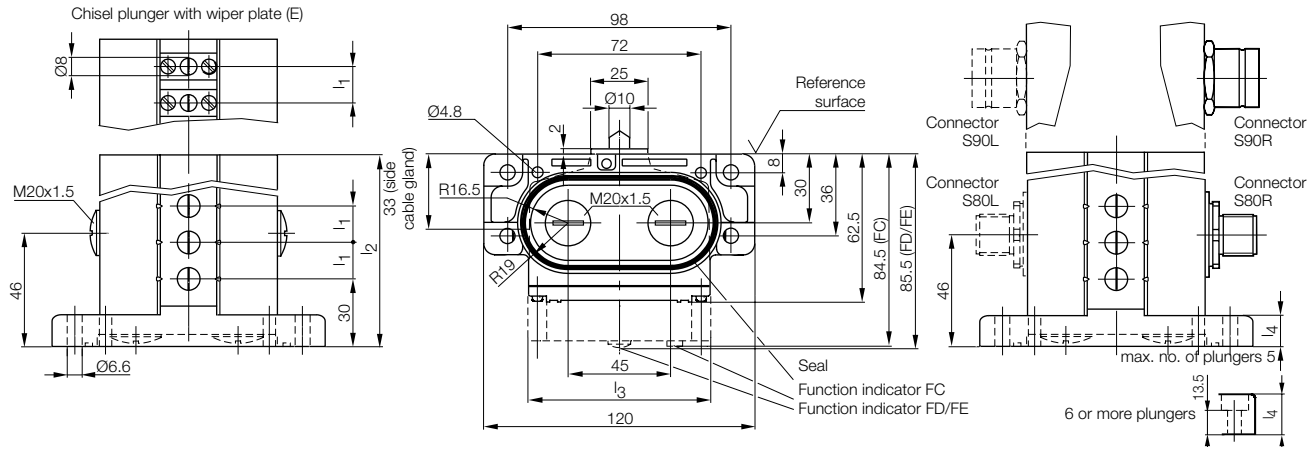

Assembly

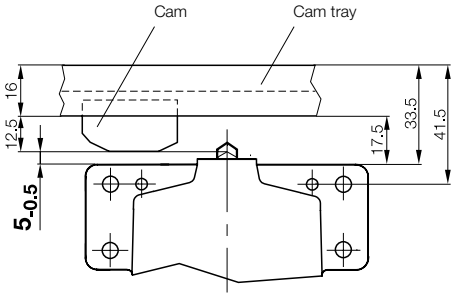

Attention!
To assure the switching function dimension $5_{-0.5}$ especially must be maintained.

Multiple position limit switches with safety switch positions Series 61

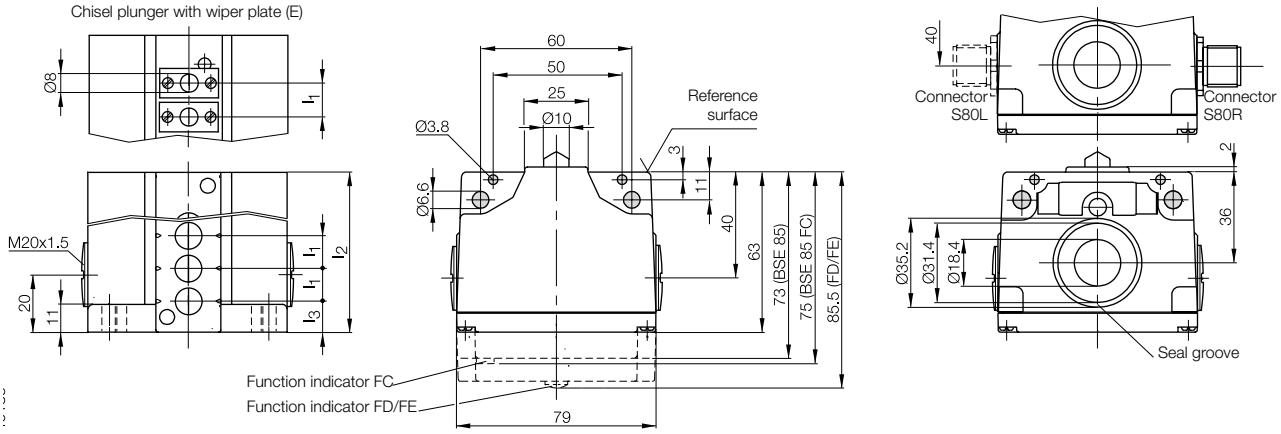

Assembly

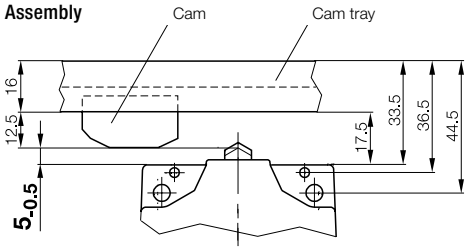

Attention!
To assure the switching function dimension $5_{-0.5}$ especially must be maintained.

Multiple position limit switches with safety switch positions Series 72

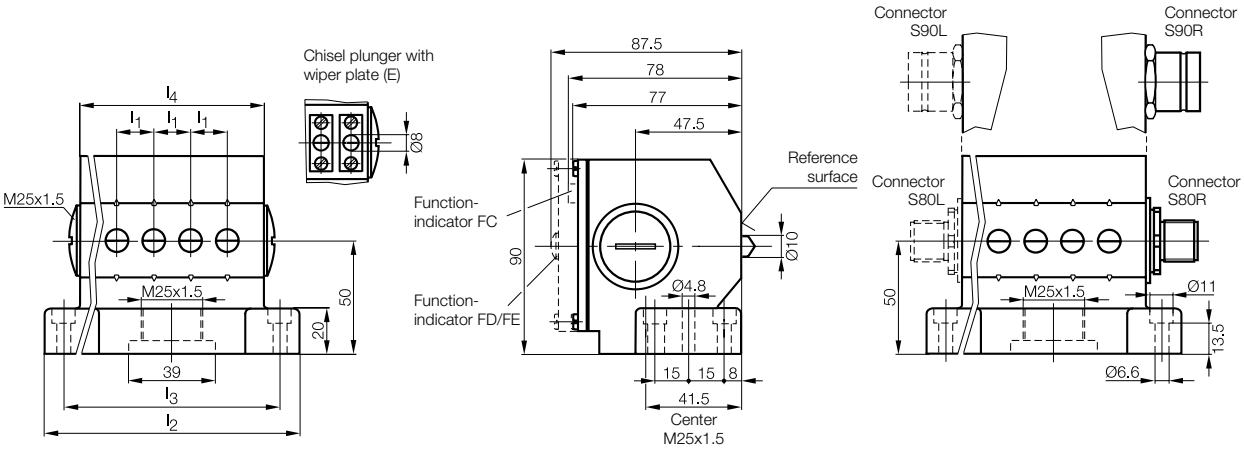

Assembly

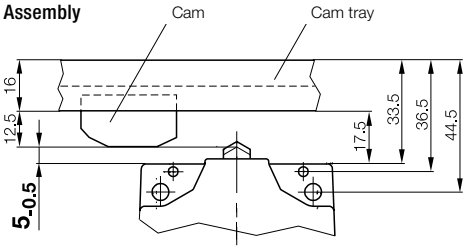

Attention!
To assure the switching function dimension $5_{-0.5}$ especially must be maintained.

Multiple position limit switches with safety switch positions and quick-change plunger block Series 100

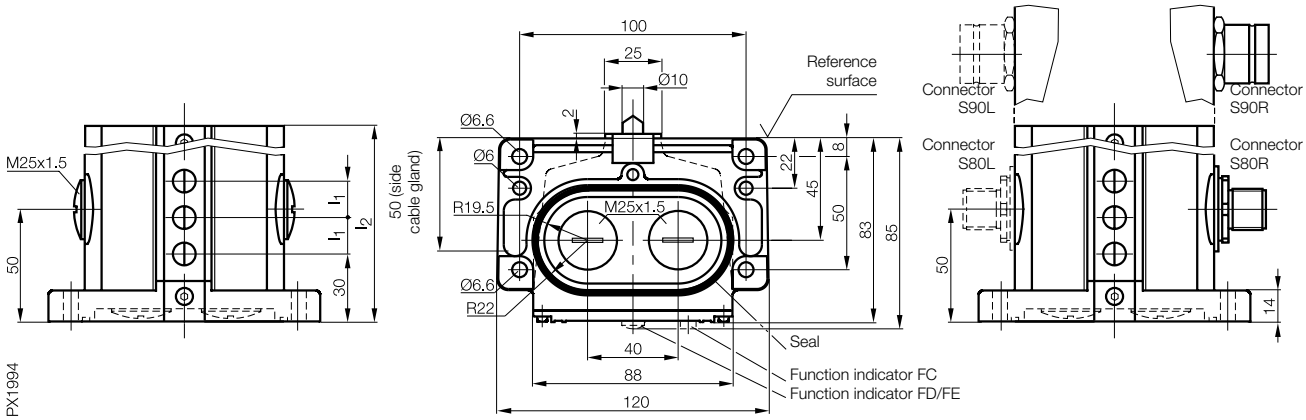

Assembly

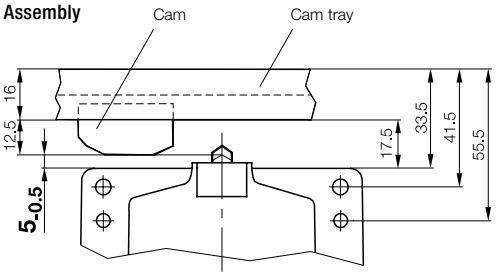

Attention!
To assure the switching function dimension $5_{-0.5}$ especially must be maintained.

Do you need more details? Our Product Finder at www.balluff.com provides you with product-specific information, including technical drawings, data sheets, user guides and more for each individual product. All items are available for download.

Multiple position limit switches with safety switch positions and quick-change plunger block Series 61

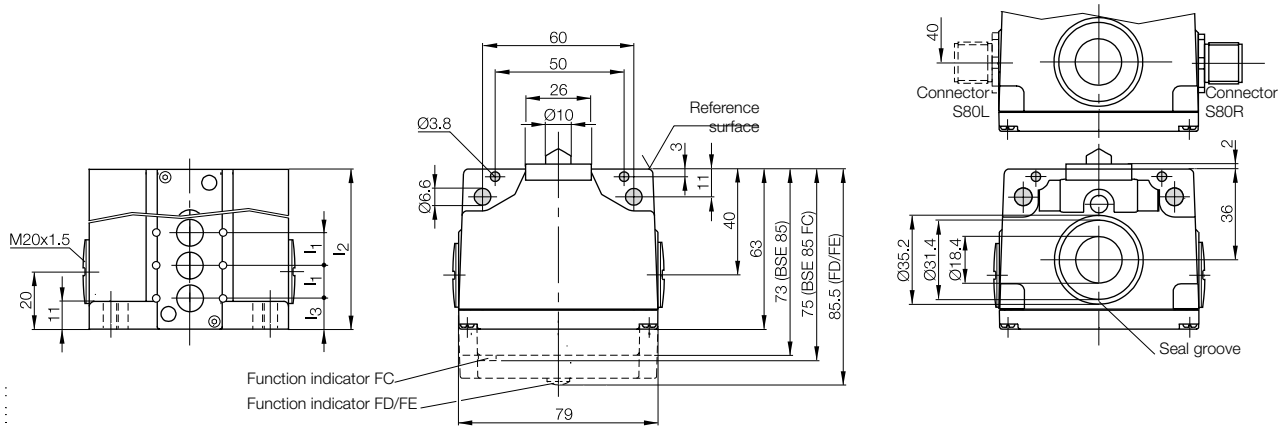

Assembly

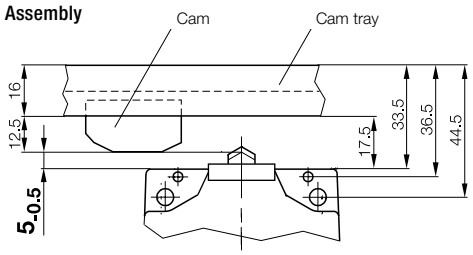

Attention!
To assure
the switching function
dimension $5_{-0.5}$ especially
must be maintained.

Position switch with positive opening Series 99 and 100

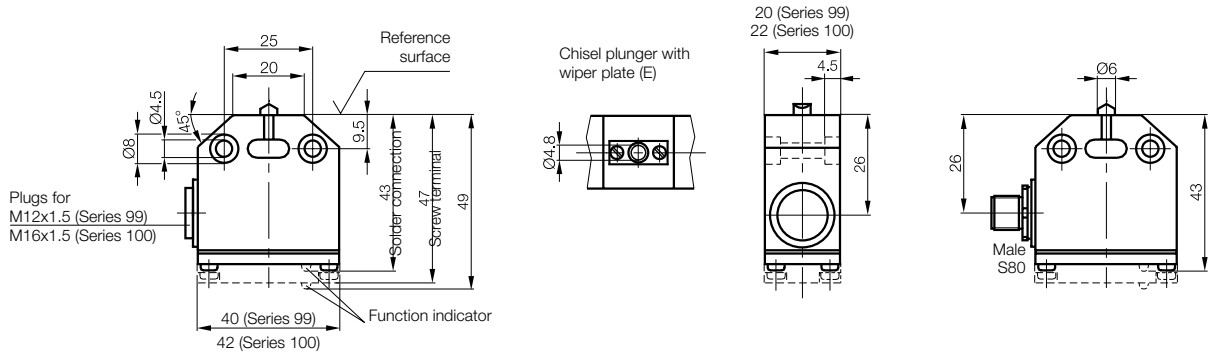

Assembly

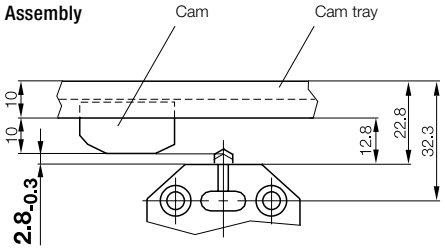

Attention!
To assure
the switching function
dimension $2.8_{-0.3}$ especially
must be maintained.

Multiple position limit switches with positive opening Series 46

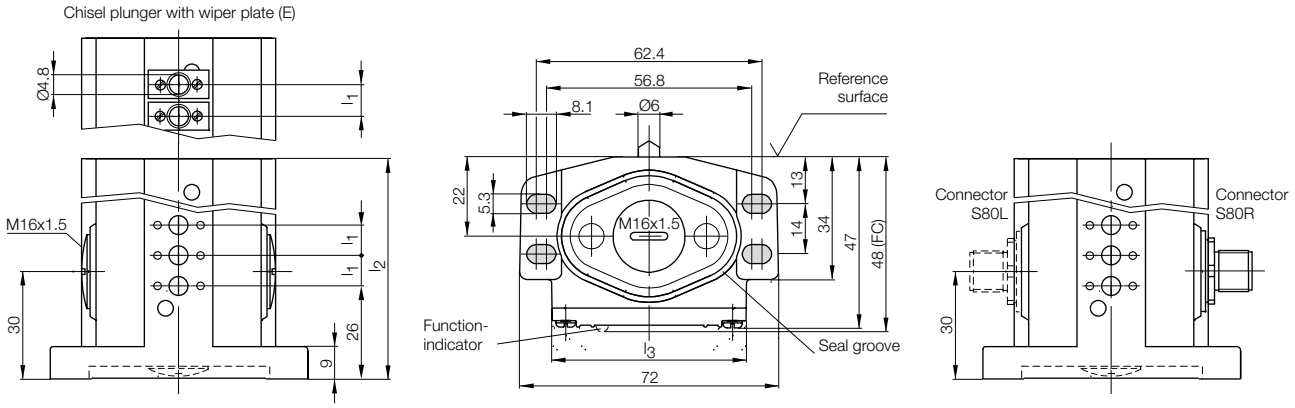

Assembly

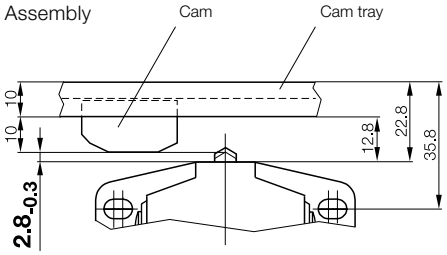

Attention!
To assure
the switching function
dimension $2.8_{-0.3}$ especially
must be maintained.

Multiple position limit switches with positive opening Series 40

Chisel plunger with wiper plate:

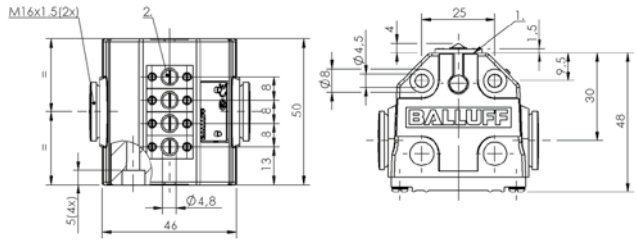

1) Reference edge
2) Anti-crystallization plunger

Standard:

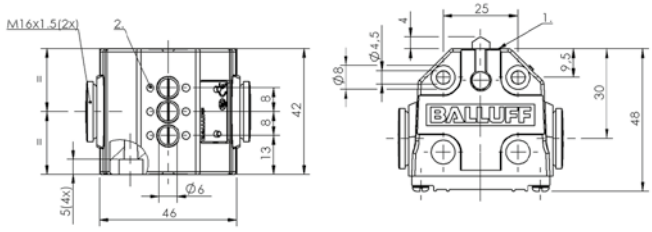

1) Reference edge
2) Mark. Safety switch position

Assembly

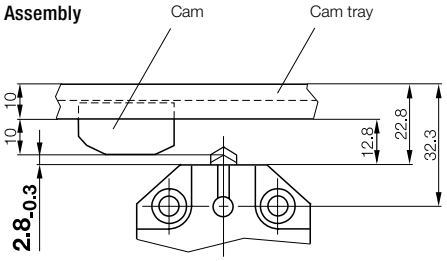

Attention!
To assure
the switching function
dimension $2.8_{-0.3}$ especially must be
maintained.

High-temperature position switch Series 99 and 100

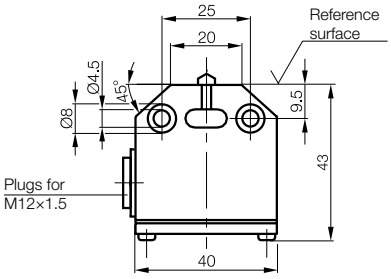

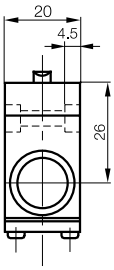

Assembly

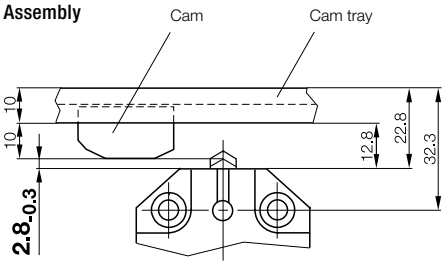

Attention!
To assure
the switching function
dimension $2.8_{-0.3}$ especially
must be maintained.

High-temperature multiple position switches Series 46 and 40

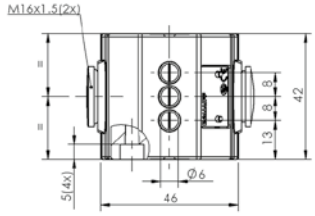

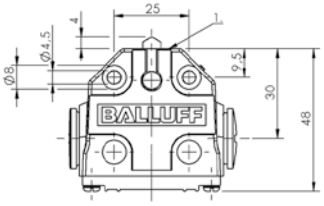

1) Reference edge

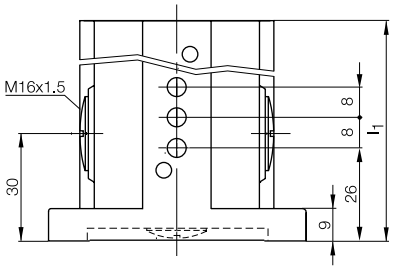

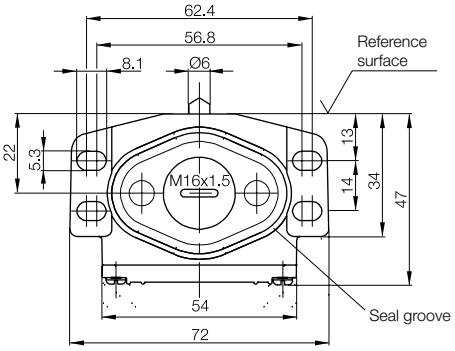

Assembly

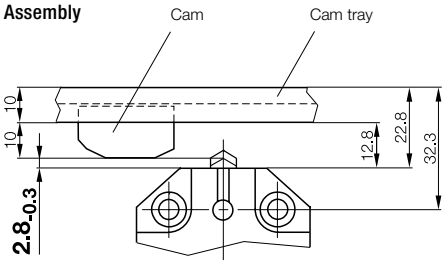

Attention!
To assure
the switching function
dimension $2.8_{-0.3}$ especially
must be maintained.

Inductive Position Switches Series H2 and H3

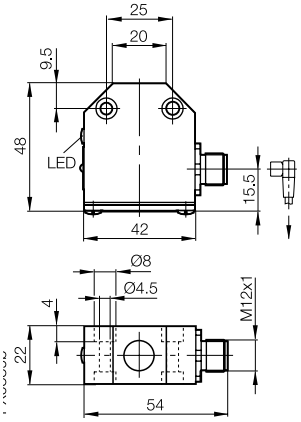

BES01FE, BES01EW

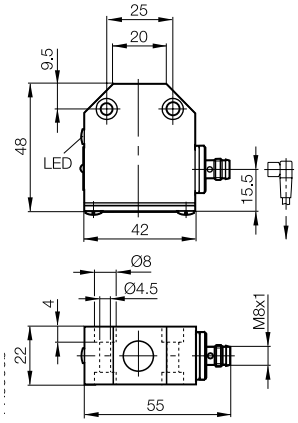

BES01FF

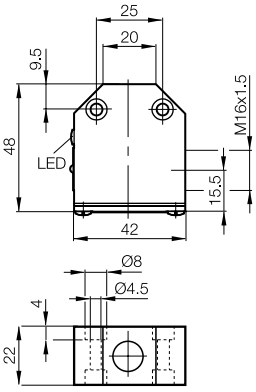

BES01FC, BES01EU, BES01ZK, BES01ET

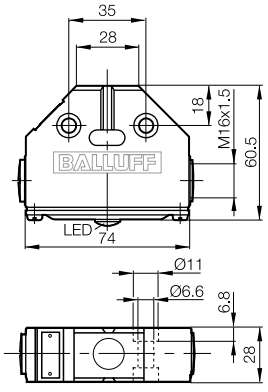

BES017M, BES017L

Inductive multiple position switches Series 602-11

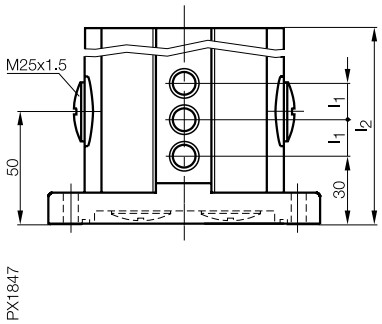

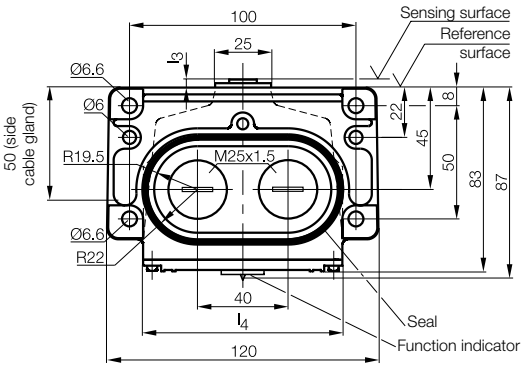

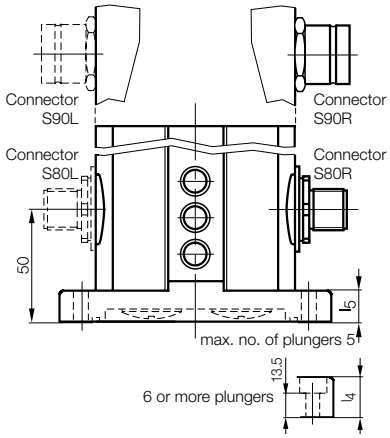

Assembly

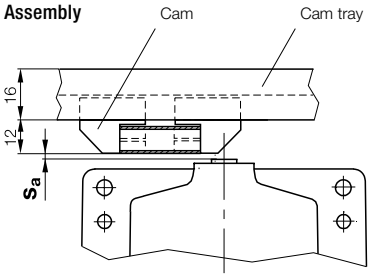

Attention!
To assure
the switching function
s_a must lie within
$0 < s_a \leq 0.81\ s_n$.

Inductive multiple position switches Series 610-11...613-11

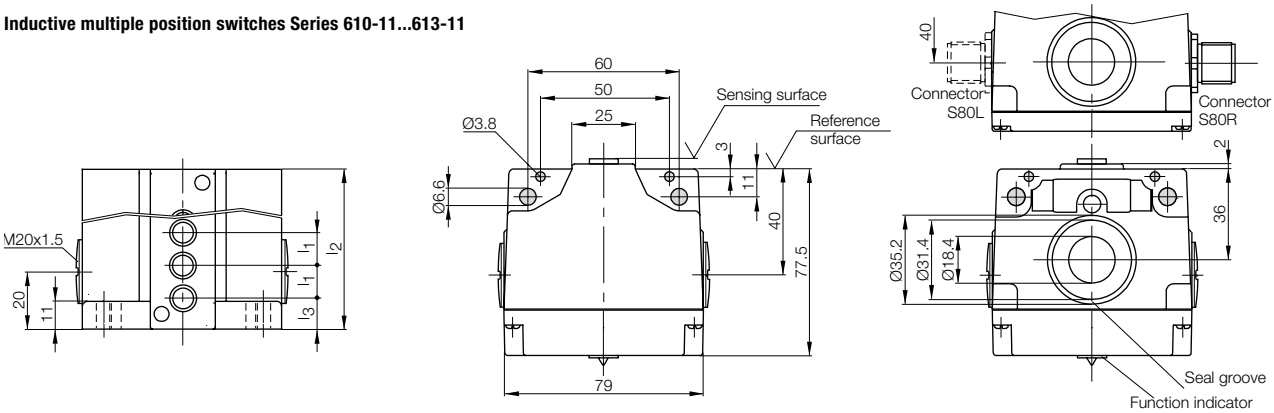

Assembly

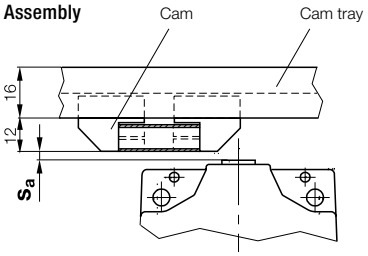

Attention!
To assure
the switching function
s_a must lie within
$0 < s_a \leq 0.81\ s_n$.

Inductive multiple position switches Series 605-11

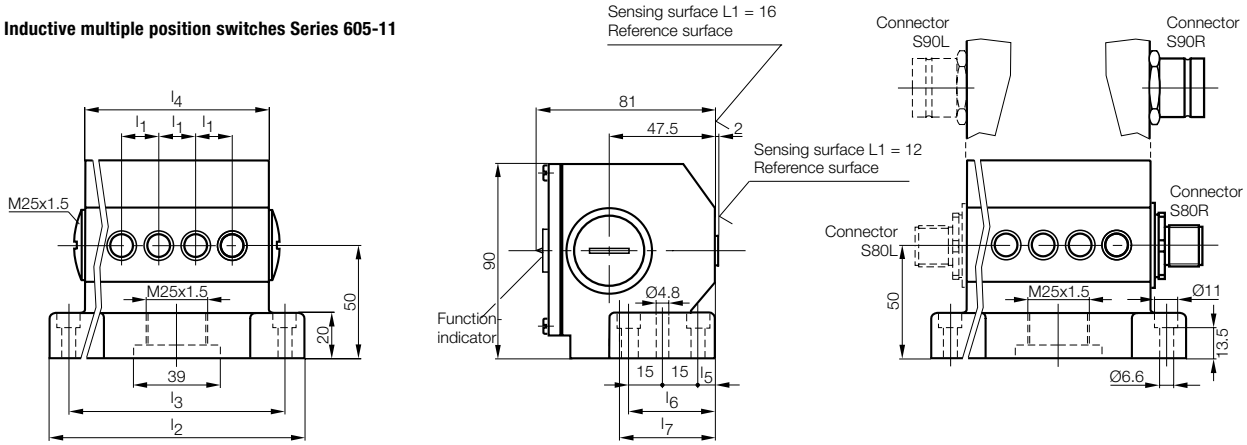

Assembly

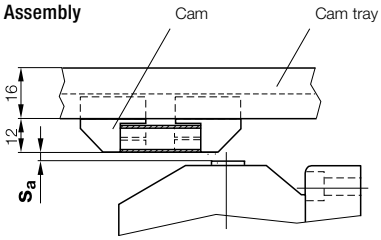

Attention!
To assure
the switching function
s_a must lie within
$0 < s_a \leq 0.81\ s_n$.

Inductive multiple position switches Series 603-11

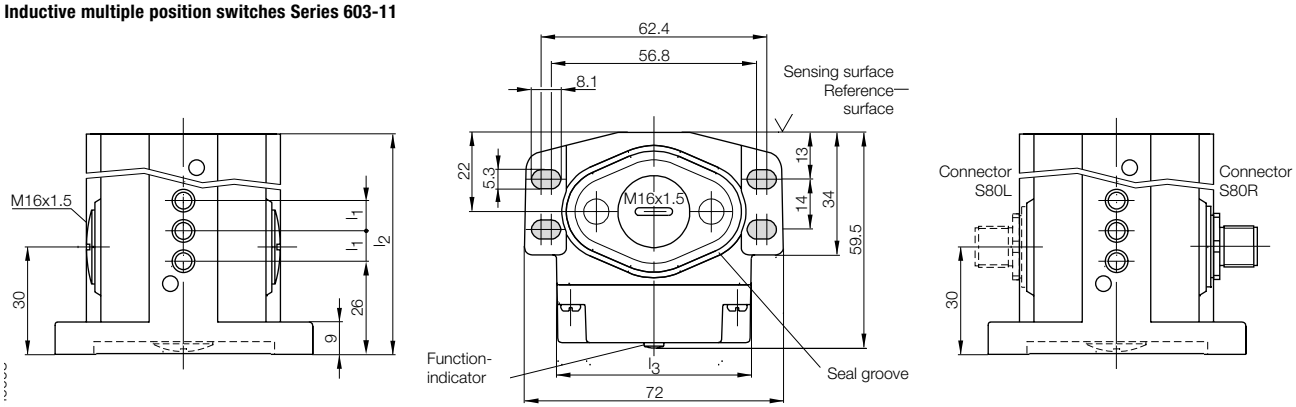

Assembly

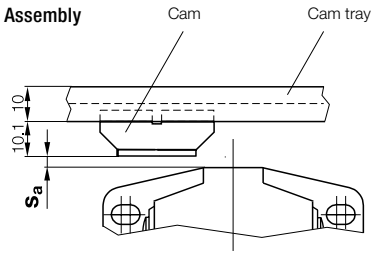

Attention!
To assure
the switching function
s_a must lie within
$0 < s_a \leq 0.81\ s_n$.

Inductive multiple position switches Series 650-11

with connectors:

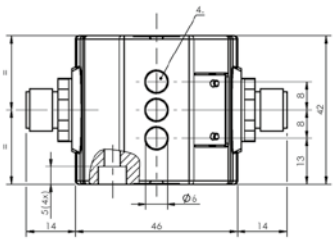

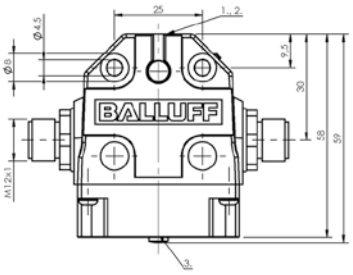

1) Reference edge
2) Sensing surface
3) Function indicator FD/FE/LL
4) 1st pos.

without connector:

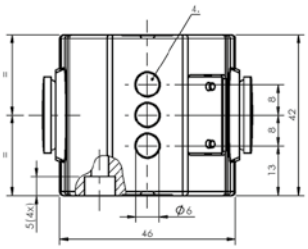

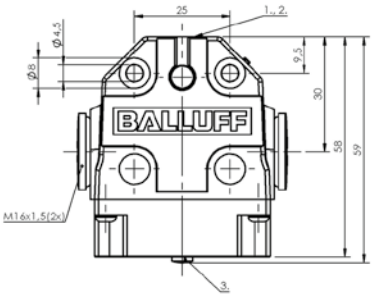

1) Reference edge
2) Sensing surface
3) Function indicator FD/FE/LL
4) 1st pos.

Assembly

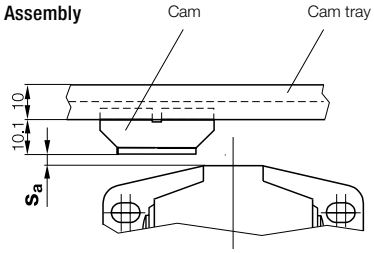

Attention!
To assure
the switching function
s_a must lie within
$0 < s_a \leq 0.81\ s_n$.

Sensors 1

BASICS AND GLOSSARY

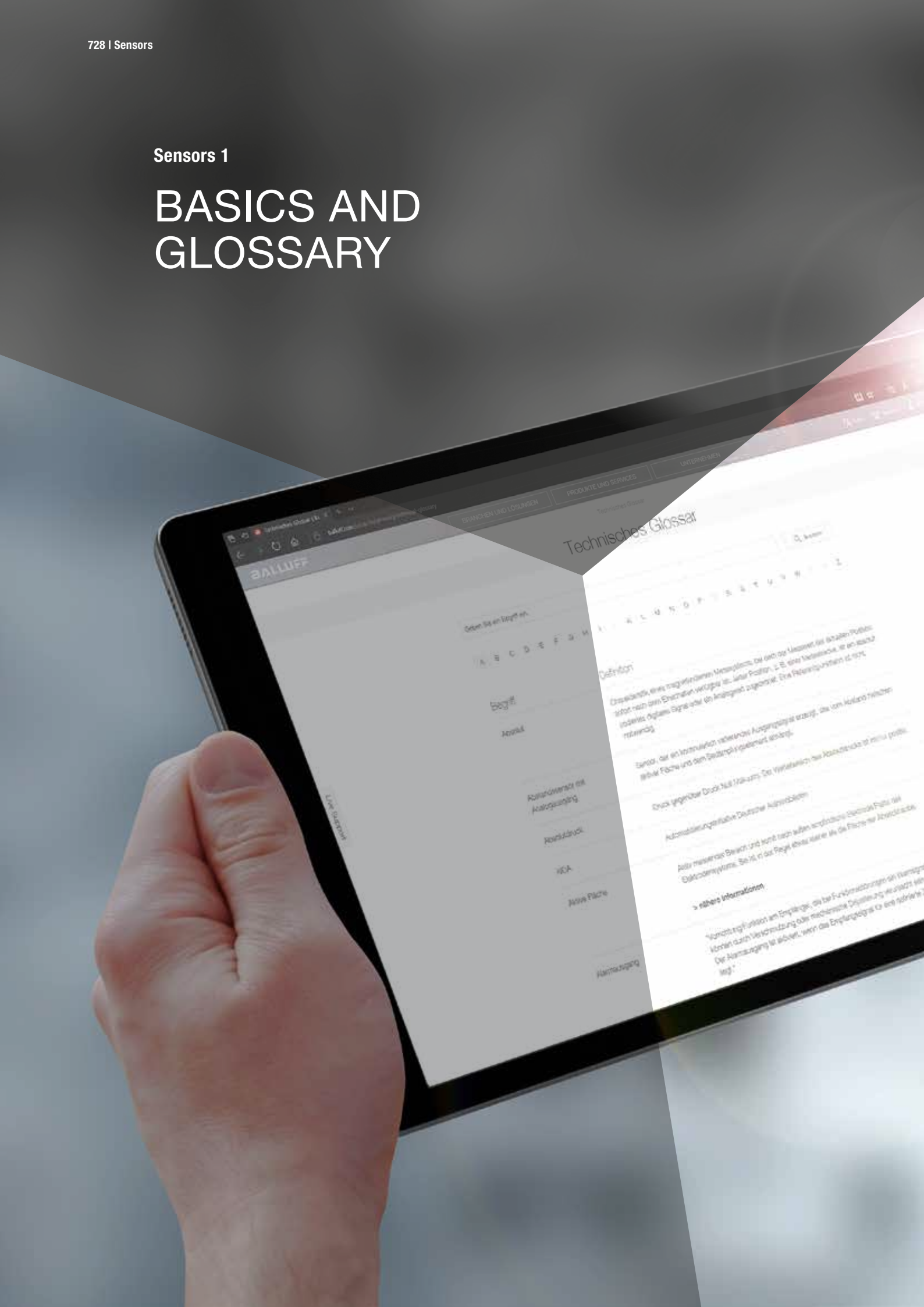

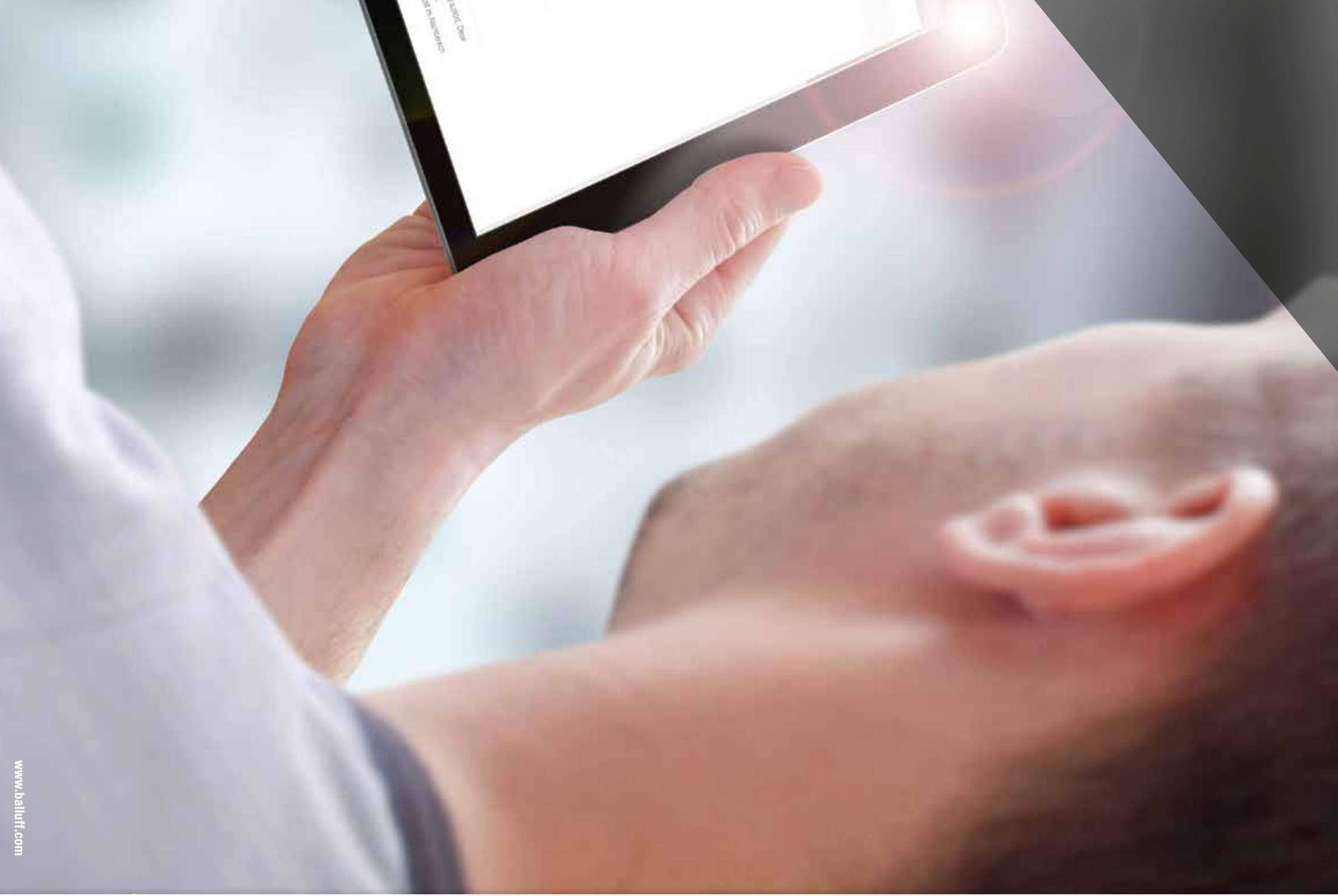

www.balluff.com

INDUCTIVE SENSORS

Principle

Inductive sensors are based on the interaction of metallic targets with the electromagnetic alternating field of the sensor. Eddy currents are induced in the metallic damping material, which removes energy from the field and reduces the height of the oscillation amplitude. This change is processed in the inductive sensor.

The functional groups of Balluff sensors are:

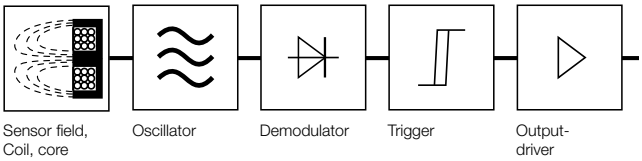

Sensing surface

Actively measuring area and thereby the externally sensitive electrode/plate of the electrode system. It is generally somewhat smaller than the surface of the cover.

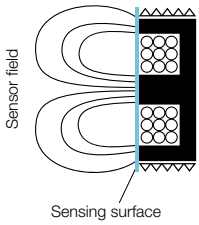

Standard target

A square plate made of Fe 360 (ISO 630), used to define sensing distances per EN 60947-5-2. Thickness is 1 mm; the side length "a" corresponds to the diameter of the inscribed circle of the active surface or 3 s_n, if the value is larger than the named diameter.

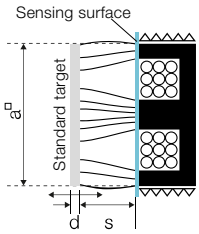

Switching frequency

The maximum speed at which the sensor can reliably detect an object under standardized conditions. This corresponds to the maximum number of switching operations (ON/OFF) per second. The value is dependent on the size and speed of the object and its distance from the sensing face.

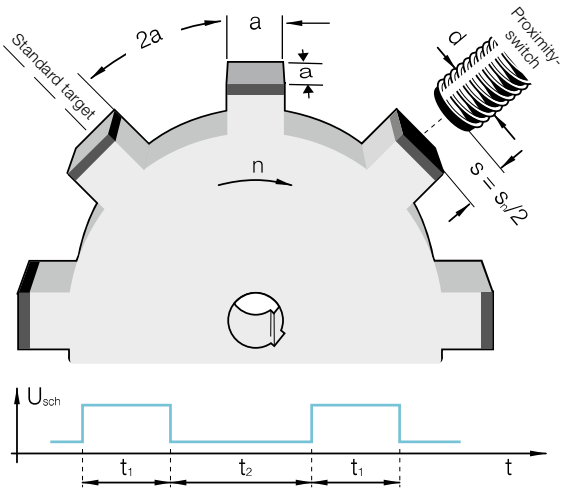

Correction factor

Reduction in the switching distance for damping materials that are not Fe 360.

Material	Factor
Steel	1.0
Copper	0.25...0.45
Brass	0.35...0.50
Aluminum	0.30...0.45
Stainless steel	0.60...1.00
Nickel	0.65...0.75
Cast iron	0.93...1.05

Factor 1 sensors
Identical switching distance for metals such as steel, stainless steel, aluminum or brass.

Steelface sensors
Effective switching distance = rated switching distance × correction factor

Model	Steel FE 360	Stainless steel	Aluminum	Copper	Brass
M8 Ferrous	1	0.1... 0.7	0	0	0.1
M12 Ferrous	1	0.1... 0.7	0	0	0
M12 Non-Ferrous	0	0	1	1.1	0.9
M18 Ferrous	1	0.1... 0.7	0	0	0
M18 Non-Ferrous	0	0	1	1.1	0.9
M30 Ferrous	1	0.1... 0.7	0	0	0
M30 Non-Ferrous	0	0	1	1.1	0.9

Ferrous
Detection of ferromagnetic steel and iron.

Non-Ferrous
Detection of non-magnetizing metals such as aluminum, copper, brass and many stainless steels.

Delay times

Time delay before availability

Duration between the application of power and the availability of a sensor.

Temperature effects and limits

Ambient temperature T_a

The maximum permissible temperature range at which a sensor may be operated while ensuring reliable functioning of the sensor.

Temperature drift

The temperature drift is the deviation of the real switching distance within the temperature range of –25 °C ≤ Ta ≤ +70 °C. In accordance with EN 60947-5-2: $\Delta s_r/s_r \leq 10$ %

Magnetic field immunity

Operating principle

Error-free function depends on the magnitude of the welding current and the distance between the sensor and the current-carrying line.

Construction and circuitry design measures ensure that magnetic field immune sensors are not influenced by magnetic fields.

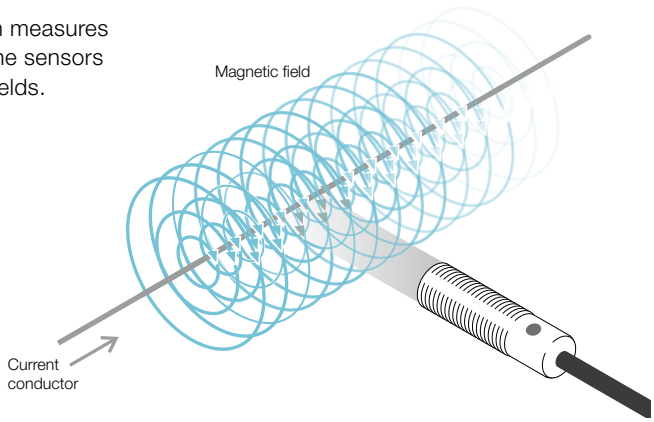

Operating voltage U_B

Voltage range (V) n which flawless functioning of the sensor is assured.
It includes all voltage tolerances and ripple.

Rated operating voltage

The maximum voltage at which the sensor can be used in normal use.
Indicated by U_e. DC switches: U_e = 24 V DC; AC and AC/DC switches: U_e = 110 V AC.

Voltage drop U_d

The maximum voltage loss of the switching final stage between switching output and $+U_B$ (PNP) or $-U_B$ (NPN) at the maximum specified load current.

Rated isolation voltage

The voltage to which the insulation checks and the air and creepage distances refer.
For sensors, the highest rated operating voltage is considered the rated insulation voltage.

Rated supply frequency

Frequency of the operating voltage when using alternating current

Ripple

The maximum permissible AC voltage (peak-to-peak of U_e which may be superimposed on the operating voltage U_S without affecting the function of the sensor.

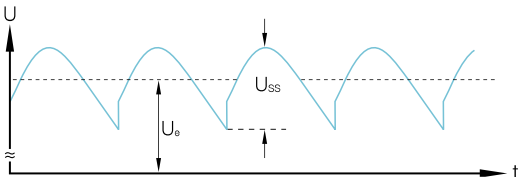

Ue = Rated operating voltage
Uss = Oscillation width

Ripple $\sigma = \frac{U_{pp}}{U_e} \times 100$ [%]

Rated operating current

The permissible output current which flows through the load R_L.

Off-state current

The current which flows in the load circuit when a sensor is not conducting (open).

Short-term current carrying capacity I_k

For an AC device the short-term permissible current I_k (A_{eff}) during a specified turn-on duration t_k (ms) and repetition rate f (Hz).

Limited rated short-circuit current

Value of the unaffected short circuit current which the short circuit protected circuit can withstand during the entire turn-off time (duration of current flow) of the device under specified conditions. This current is prescribed in the standard in order to test the short-circuit protection of sensors.

No-load current

The maximum internal current consumption with no load connected to the switching output (in general at $U_{B\ max.}$ and actuated).

Minimum operating current

Minimum current (mA) required when energizing the output to maintain operation.

Output resistance

Resistance (Ra) at the output of a circuit or component. The output resistance is generally a frequency-dependent, complex resistance with amount and phase and is referred to as output resistance.

Load capacitance

The load capacitance is the permitted total capacitance at the sensor output, including cable capacitance.

Output circuits

Driver stages

3-wire DC-switch

PNP, positive switching (current source)

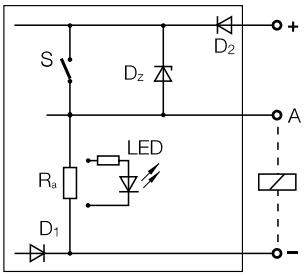

NPN, negative switching (current sink)

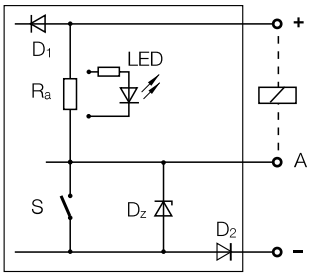

S = Semiconductor switch
R_a = output resistance
LED = Light diode
D_z = Z-diode, delimiter
D_1 = Polarity reversal-protected diode
D_2 = Polarity reversal-protected diode in the load circuit (only with short-circuit protected version)

2-wire DC-switch

Non-polarized

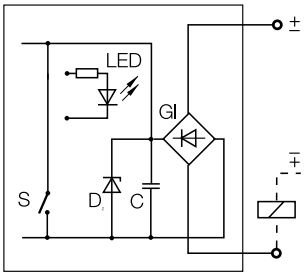

S = Semiconductor switch
Dz = Z-diode, delimiter
C = capacitor
Gl = bridge rectifier
LED = light emitting diode

2-wire AC- and AC/DC-switch (all current switch)

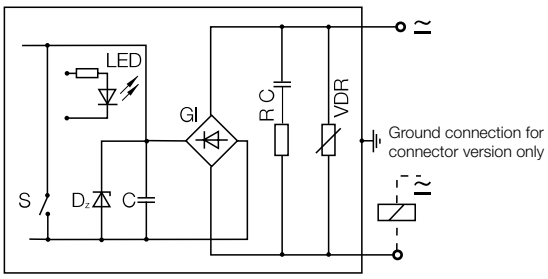

S = Semiconductor switch
D_z = Z-diode, delimiter
C = Sieve condenser
RC = HF-points-limit
Gl = bridge rectifier
LED = Light diode
VDR = Voltage point limiter

	Cable/terminals	Male	Cable/terminals	Male
DC 3-/4-wire	PNP (+) sourcing		NPN (–) sinking	
NO	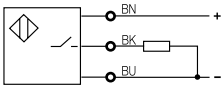	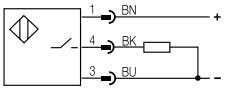	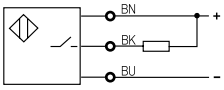	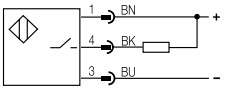
NC	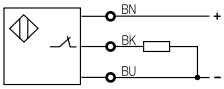	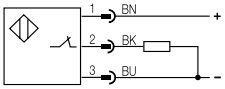	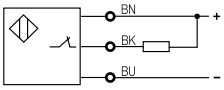	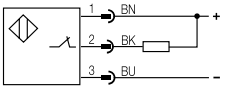
Complementary	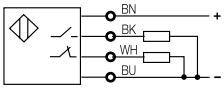	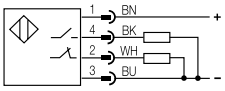	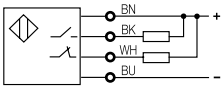	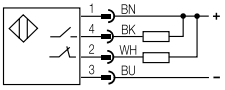

	polarized	Non-polarized
DC 2-wire		
NO	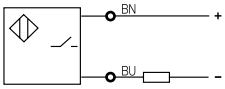 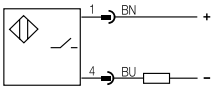	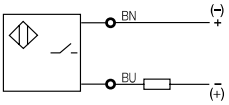 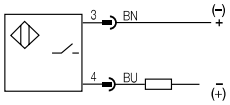
NC	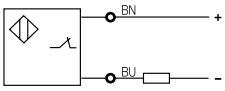 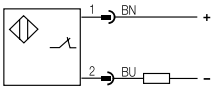	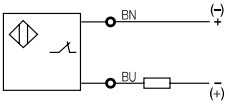 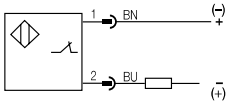

	Protection isolated (Protection Class II ⧈)	with protection ground (insulation class I)
AC sensors		
NO	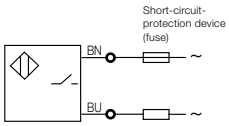	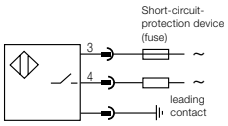

	Protection isolated (Protection Class II ⧈)	with protection ground (insulation class I)
AC/DC sensors		
NO	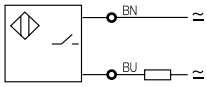	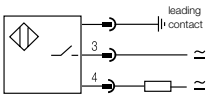
NC	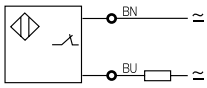	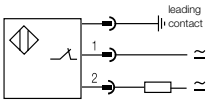
Closer-opener, programmable	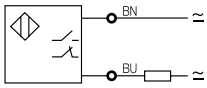	

Series connection

Electrical circuit type in which the components are connected to each other in a string so that they form a single current path.

3-wire DC-switch

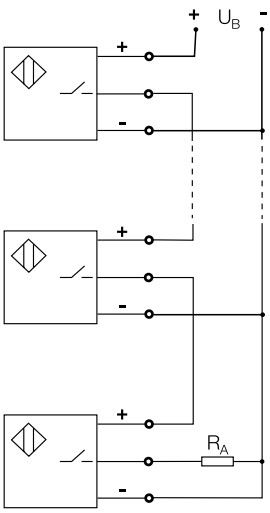

2-wire DC-switch (AC/DC)

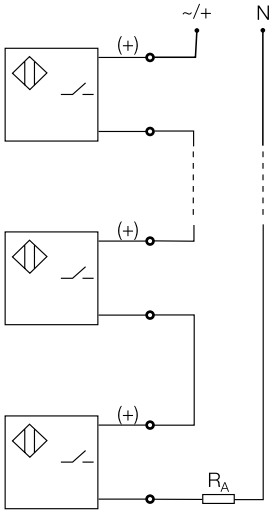

Parallel circuit

Electrical circuit type in which all the switching elements and their same named poles are connected in common to each other, so that multiple current paths result.

3-wire DC-switch

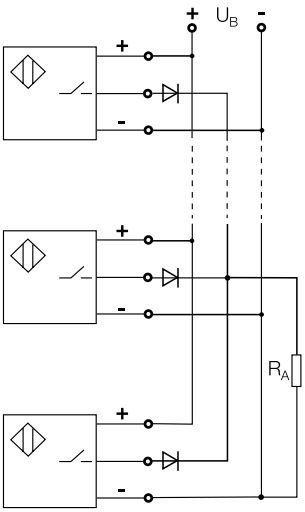

2-wire DC-switch

Parallel wiring of 2-wire-sensors is not recommended, since missed pulses can be caused by the ready delay as the oscillator begins to oscillate.

Utilization categories in accordance with EN 60947-5-2/IEC 60947-5-2

Category		Typical load applications
AC 12	AC-switch	Resistance- and semiconductor loads, optocouplers
AC 140	AC-switch	Small electromagnetic load Ia ≤ 0.2 A; e.g. contactor relay
DC12	DC-switch	Resistance- and semiconductor loads, optocouplers
DC 13	DC-switch	Electromagnets

Smallest bending radius for standard PUR and standard PVC cables

Bending radius at rest: min. 5 × cable diameter
Bending radius in motion: min. 10 × cable diameter

Cable break protection

Characteristic of 3-wire switches which prevent malfunction when there is a cable break. A built-in diode prevents the current from flowing via the output line A.

Reverse polarity protection

Also called polarity reversal protection. This sensor technology protects against reversal of the supply voltage (plus and minus) and reversal of the connection wires (brown and blue).

Short-circuit rating

Characteristic of components or assemblies which indicates the short-circuit current which the component or assembly can withstand.

Short-circuit protection (sensors with a maximum voltage of 60 V DC)

The short-circuit protection is achieved in Balluff sensors with clocked or thermal short-circuit protection circuitry. The output stage is thereby protected against overload and short circuit. The release current of the short-circuit protection is above the rated operating current I_e. Currents from switching and load capacitances are specified in the sensor data and do not trigger this function, but rather are masked by a short delay time.

Short-circuit protected/overload protected (sensors for operation optional with AC or DC power supply)

Short-circuit protected/overload protected sensors are often operated with relays or contactors as load. At switch-on, alternating current switching amplifiers (protection contactor/relay) for the sensor are briefly a substantially higher load (6...10 × rated current) than later in the later static operation, because their core is still open. The static value of the load (current) is only reached after several milliseconds. Not until the magnetic field is closed does the max. permissible rated operating current I_e listed in the data sheet flow through the sensor. The release value for a short-circuit in these sensors therefore has to be significantly greater. If for example the contactor can no longer be entire closed due to mechanical or electrical reasons, this could lead to an overload of the sensors. This is where the overload protection comes into play. It is designed as slow-acting (time-delayed). Its trigger threshold lies only slightly above the maximum permissible Ie. A reaction (in other words, shutoff) occurs, depending on the height of the overload, only after more than 20 ms. This ensures that properly working relays and contactors can be switched normally, while defective devices will not destroy the Balluff sensors. The short-circuit/overload protection usual has a bistable design and has to be reset after triggering by switching the operating voltage.

Recommended short-circuit protection device for BES033J, BES033H, BES017M

Miniature fuse in accordance with IEC 60127-2 sheet 1,
≤ 2 A (fast-acting). The fuse has to be in the load current line;
the fuse may not be placed in the output line.

Approach direction

Direction of an object as it enters the detection range/active range of a sensor.

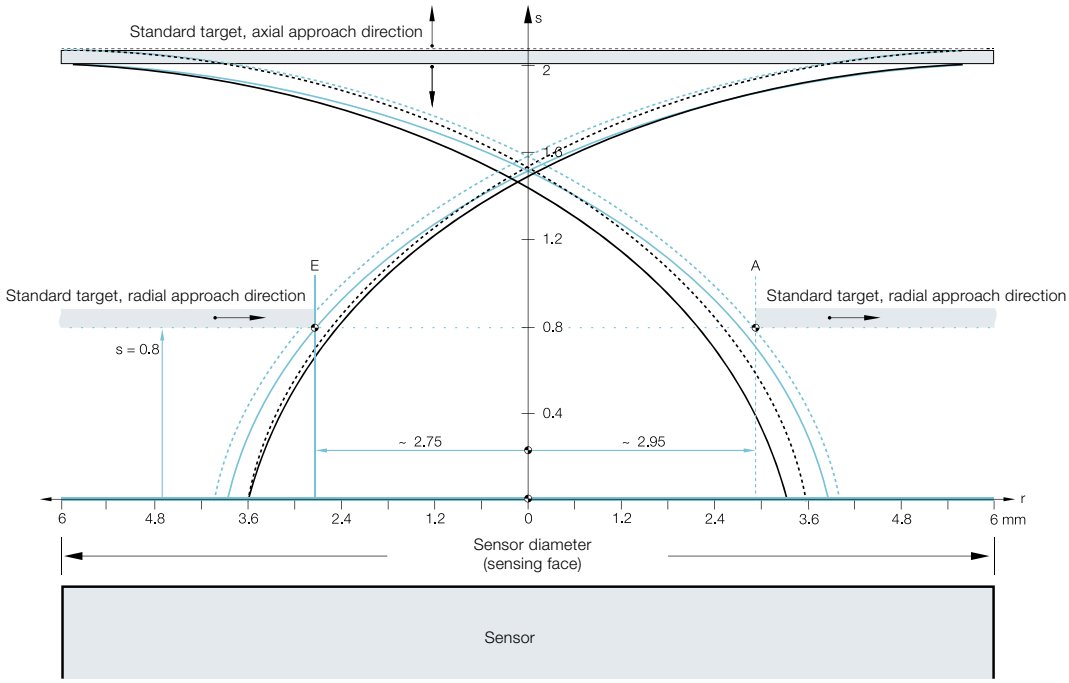

Axial and radial damping

When damping in an axial direction, the standard target is moved concentric to the system axis. The switchpoint is thereby determined only by the distance "s" from the sensing surface of the sensor. When damping in the radial direction, the location of the switching point is additionally affected by the radial distance "r" of the target from the system axis. The diagram shows the response curves, which indicate the dependency of the switching point on "s" and "r". The primary purpose of this drawing is to show the possibility of damping using a lateral approach and the difference compared with axial approach.

Application

Due in part to manufacturing tolerances within a production run, the exact switchpoint must in any case be established on site. The solid curves indicate the respective turn-on point, the dashed curves the turn-off point A. The blue curves apply to switches with a clear zone, and the black ones for flush-mountable switches. Since the switching operation can be induced from either direction, the curves are shown mirrored from the system axis.

Examples

Passing objects on conveyor lines generate a signal change when their front edge crosses the turn-on curve on the entry side. The signal reverses again when the back edge of the passing object crosses the (mirrored) turn-off curve on the opposite side. In the case of reversing parts (e. g. end of travel), the signal reversal occurs at the turn-off curve on the same side.

The vertical axis in the diagram shows the distance of the switching point from the sensing surface. It is based on the rated switching distance sn. At a distance of 0.8 mm, a laterally approaching target reaches the solid line turn-on curve at point "E" and leaves the turn-off curve at point "A". the horizontal axis in the graph is referenced to the radius of the sensing surface. The zero point of this axis lies in the center of the shell core cap. In our example for the M12 switch, the radius is r = 6 mm.

Switching distances

Switching distance

The distance between the standard target and the sensing surface of the sensor at which a signal change is triggered as per EN 60947-5-2. For a normally open switch this means from OFF to ON and for normally closed from ON to OFF.

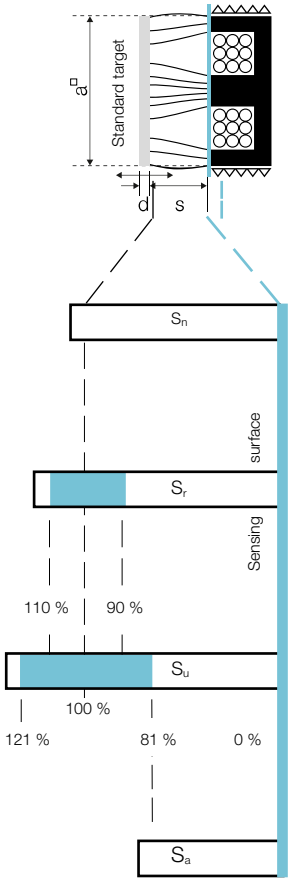

Assured switching distance S_a

Switching distance within which assured operation of the sensor at a specified voltage and temperature range is given ($0 \leq s_a \leq 0.81\ s_n$).

Effective operating distance s_r

The switching distance of a single proximity switch measured under specified conditions, e.g. flush mountable, rated operating voltage U_e, temperature T_a.

Rated operating distance S_n

Maximum achievable switching distance from the standard target under device specification (generally with s_n as shipped from the factory).

Usable operating distance

The permissible operating distance is the permitted switching distance within fixed voltage and temperature limits ($0.81\ s_n \leq s_u \leq 1.21\ s_n$).

Switching distance labeling

Switching distance	Size	Switching distance
■ Standard-switching distance according to EN 60947-5-2		
■■ **2 ×** switching distance compared to standard	Ø 3 mm*	1 mm flush
	Ø 4 mm/M5*	1.5 mm flush
	Ø 6.5 mm...M30	1.5...2-x
■■■ **3×** switching distance compared to standard	Ø 3 mm*	3 mm non-flush
	Ø 4 mm/M5*	5 mm non-flush
	Ø 6.5 mm...M12	2.2...3-x
	M18...M30	depending on version
■■■■ **4×** switching distance compared to standard		

*Information for switching distance in mm. The switching distances of these sensors are not standardized.

Repeat accuracy

Variance in the output values when approaching a mechanically prescribed position repeatedly from the same direction.

Hysteresis

Signal difference resulting for measurement sensors when a mechanically prescribed position is approached from one side, then crosses this point and afterwards approaches this same position from the other direction. Position difference between switching point (object approaches) and switch-back point (object travels away) for switching sensors.

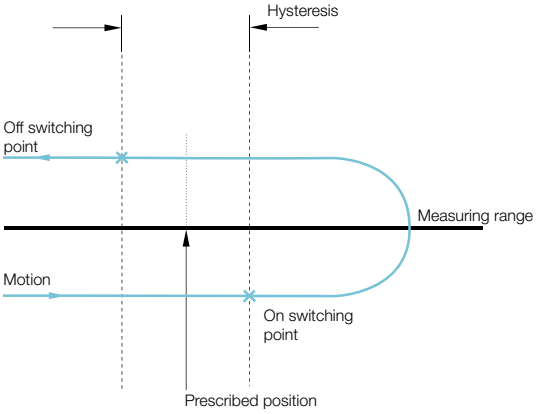

Installation in metal: Sensors with standard switching distance ■

Flush mountable sensors

Flush mountable sensors can be installed with their sensing surfaces flush to the metal. The distance to the opposite metal surfaces has to be ≥ 3 s_n, and the distance between two sensors (with row mounting) has to be ≥ 2d.

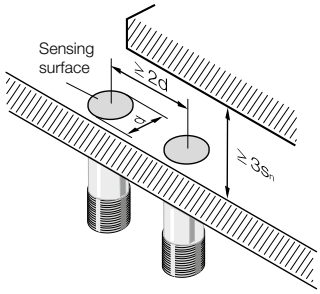

Non-flush mountable sensors

Non-flush mountable sensors can be identified by their "caps", since they have no metal housing surrounding the area of the sensing face. The sensing surface must extend ≥ 2 s_n from the metallic installation medium. The distance to the opposite metal surfaces has to be ≥ 3 s_n, and the distance between two sensors (with row mounting) has to be ≥ 3 d.

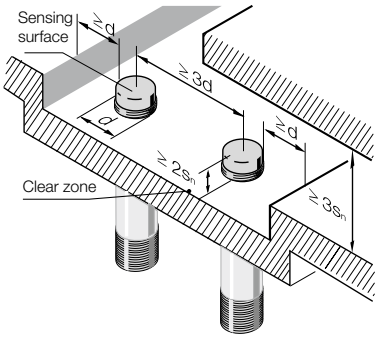

Opposing installation of two sensors

The opposing (facing) installation of two sensors requires a minimum distance of a ≥ 3d between the sensing faces.

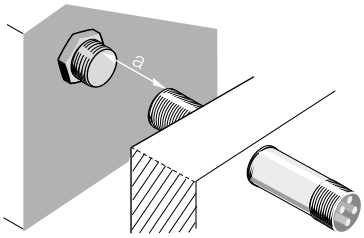

Installation medium

Materials	Description
Ferromagnetic materials	Iron, steel or other magnetizable materials
Non-ferrous metal	Brass, aluminum or other non-magnetizable materials
Other materials	Plastics, electrical non-conductive materials

Installation in metal: Sensors with 2 × switching distance ■■

Flush mountable sensors

Flush mountable sensors can be embedded flush up to their sensing surfaces in non-ferrous materials. Installation in non-ferrous metal may result in a reduction of the switching distance. The distance to the opposite metal surfaces has to be ≥ 3 sn, and the distance between two sensors (with row mounting) has to be ≥ 2d. In order to install the sensor in ferromagnetic materials, the following guidelines are used for dimension "x".

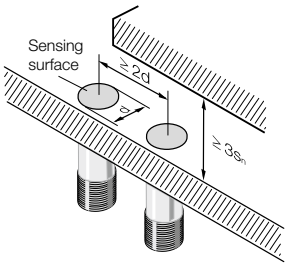

Size d	Dimension x
Ø 3 mm	1 mm
Ø 4 mm	1.5 mm
M5	1.5 mm
Ø 6.5 mm	0 mm
M8	0 mm
M12	1.5 mm
M18	2.5 mm
M30	3.5 mm

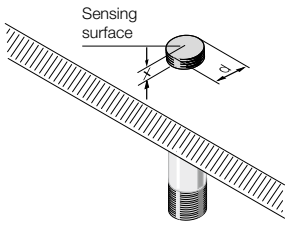

For DC 2-wire sensors, the following apply:

Size d	Dimension x
M8	0 mm
M12	0 mm
M18	0.7 mm
M30	3.5 mm

In the Factor 1 and ATEX NAMUR sensor family, dimension x is not needed when installing in metal.

Non-flush mountable sensors

Non-flush mountable sensors can be identified by their "caps", since they have no metal housing surrounding the area of the sensing face. The sensing face must extend ≥ 2 sn from the metallic installation medium. The distance to the opposite metal surfaces must be ≥ 3 sn, and the distance between two sensors (with row mounting) has to be ≥ 3 d.

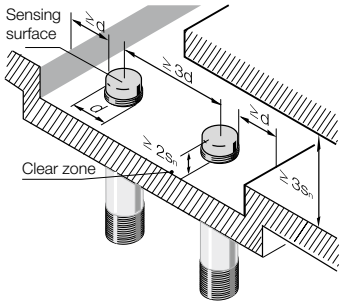

Opposing installation of two sensors

The opposing installation of two sensors requires a minimum distance of a ≥ 4d between the sensing surfaces.

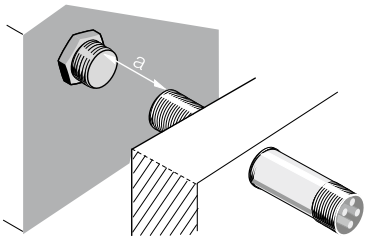

Installation in metal: Sensors with 3 × and 4 × switching distance ■■■ and ■■■■

Quasi-flush mountable sensors

Quasi-flush mountable sensors require space behind the sensing surface which is free of conductive materials. Under this condition the specified switching distance is available without limitation. Dimension "×" (see fig.) indicates the shortest distance between the sensing face and the conductive material behind it.

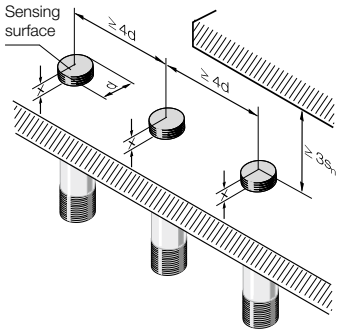

Size d	3x switching distance: Dimension x for installation in		4x switching distance: Dimension x for installation in	
	Ferromagnetic material	Other metals	Ferromagnetic material	Other metals
Ø 6.5 mm	2 mm	1 mm	3 mm	2 mm
M8	2 mm	1 mm	3 mm	2 mm
M12	2.5 mm	2 mm	4 mm	3 mm
M18	4 mm	2.5 mm		
M30	8 mm	4 mm		

Non-flush mountable sensors

Non-flush mountable sensors can be identified by their "caps", since they have no metal housing surrounding the area of the sensing face. The distance to opposing metal surfaces must be ≥ 3 s_n.

Installation conditions:

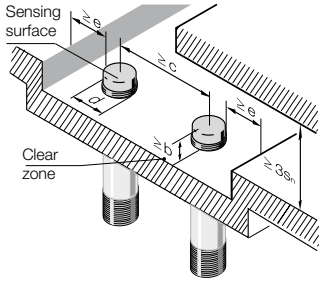

Size d	Dimension x	Dimension x	Dimension x
Size d	Dimension b	Dimension c	Dimension e
Ø 3 mm	≥ 10 mm	≥ 30 mm	≥ 10 mm
Ø 4 mm	≥ 15 mm	≥ 40 mm	≥ 20 mm
M5	≥ 15 mm	≥ 40 mm	≥ 20 mm
Ø 6.5 mm	≥ 8 mm	≥ 32 mm	≥ 8 mm
M8	≥ 8 mm	≥ 32 mm	≥ 8 mm
M12	≥ 10 mm	≥ 48 mm	≥ 12 mm
M18	≥ 20 mm	≥ 72 mm	≥ 18 mm
M30	≥ 35 mm in steel ≥ 25 mm in non-ferrous metal ≥ 20 mm in stainless steel	≥ 120 mm	≥ 30 mm

Opposing installation of two sensors

The opposing installation of two sensors requires a minimum distance of a ≥ 5d between the sensing surfaces.

For exceptions see table:

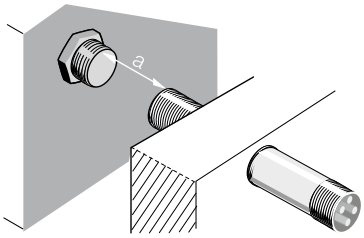

Size d	Dimension a
Ø 3 mm	20 mm
Ø 4 mm	45 mm
M5	45 mm

Installation instructions for block-style designs and sensors with special properties

Recommendation for gluing in the sensor Ø 6.5 mm smooth

Prepare and clean drill hole and sensor according to the specifications of the glue used. Coat hole and sensor with adhesive and position sensor in hole. Allow to cure. For additional instructions, see the data sheet.

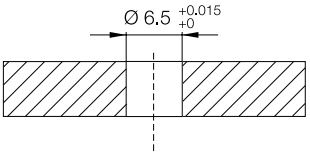

Features

- Simple installation with glue-in sensor
- Flexible use with optional radial cable outlet

Installation notice for BES R04... with s_n 2.5 mm

Aluminum:	can be mounted completely flush
Steel:	all the way around with a 1.5 mm clear zone

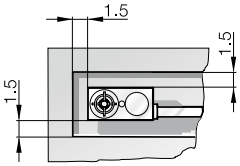

Mounting bracket BAM00K3 for BES R04... with s_n 1.5 mm (please order separately)

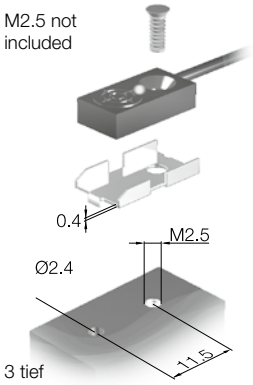

Installation note for BES030E and BES030F

Small, compact block sensor with increased switching distance for quick installation. The connector mount can be rotated and the sensing face can be oriented in three directions.

Simple replacement with no loss of position thanks to the fixed mounting plate:

- Cost savings
- No special tools necessary
- Simple to install

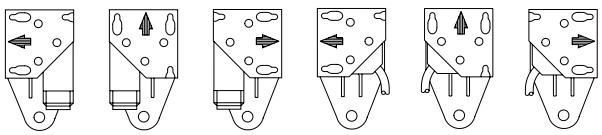

Installation note for BES R05KB...

Row mounting

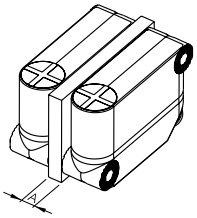

- With plastics or no material present in the space:
- Distance A = at least 5 mm
- With metal in the space:
- Distance A = at least 4 mm

Installation note for 40 × 40 mm series Unicompact

Flush installation

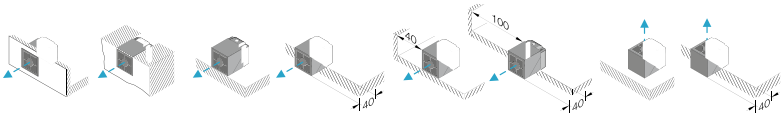

Sensing distance	Mounting	Permissible installation options							
15 mm	Original mounting bracket (plastic)	■	■	■	■	■	■	■	■
	Mounting bracket BES Q40-HW-2 (metal)	■	■	■	■	■	■	■	■
20 mm	Original mounting bracket (plastic)	■	■	■	■	■	■	■	■
	Mounting bracket BES Q40-HW-2 (metal)	■	■	■	■	■	■	■	■

Non-flush installation

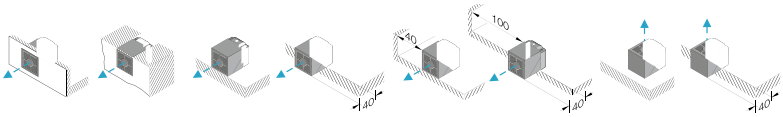

Sensing distance	Mounting	Permissible installation options							
25 mm	Original mounting bracket (plastic)			■	■	■	■	■	■
	Mounting bracket BES Q40-HW-2 (metal)			■	■	■	■	■	■ [3]
35 mm [1]	Original mounting bracket (plastic)				■		■		■
	Mounting bracket BES Q40-HW-2 (metal)				■		■		
35 mm [2]	Original mounting bracket (plastic)			■	■	■	■	■	■
	Mounting bracket BES Q40-HW-2 (metal)				■		■		■ [3]
40 mm	Original mounting bracket (plastic)				■		■		■
	Mounting bracket BES Q40-HW-2 (metal)				■		■		

[1] with BES ...35E... [2] with BES ...35Z...011 [3] Switching distance can be reduced by 15 %

Row mounting

80 mm flush
120 mm non-flush

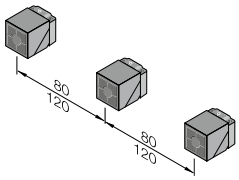

Installation note for 40 × 40 mm series Unisensor

Flush installation

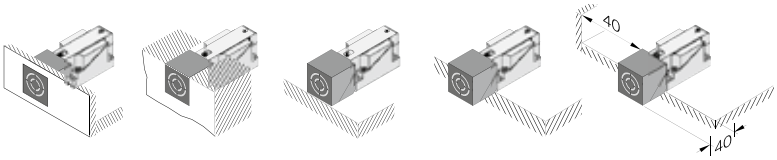

Sensing distance	Permissible installation options				
15 mm	■	■	■	■	■
20 mm	■	■	■	■	■

Row mounting

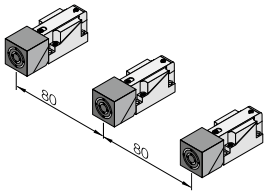

Non-flush installation

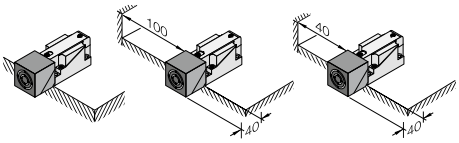

Sensing distance	Permissible installation options		
20 mm	■	■	■
25 mm	■	■	■
30 mm	■	■	
40 mm	■	■	

Row mounting

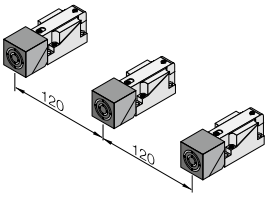

Installation note for 80 × 80 mm series Maxisensor

Flush installation

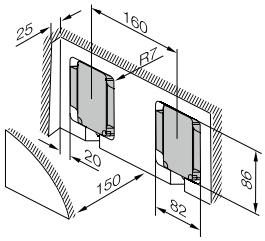

Non-flush installation

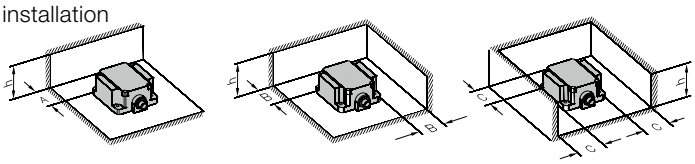

Minimum distances in metal

Metal/measurements	h	A	B	C
Stahl	40 mm	70 mm	80 mm	90 mm
Stahl	70 mm	80 mm	90 mm	100 mm
Aluminum	40 mm	0 mm	10 mm	10 mm
Aluminum	70 mm	10 mm	20 mm	20 mm

Please note whether it is installed in ferrous or non-ferrous materials.

Installation instruction for high pressure rated sensors with O-ring

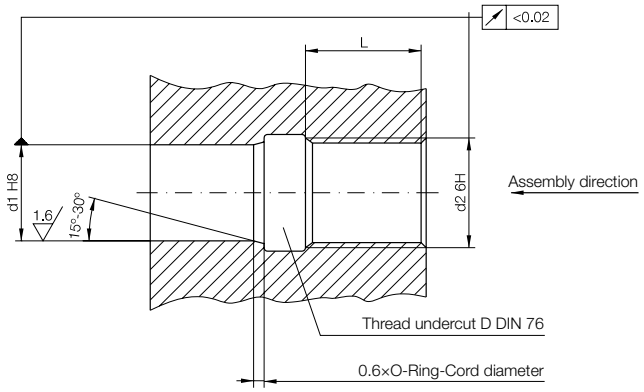

For example, with BHS0035:

d_1: Ø of the positioning hole for the switch head Ø 10^{H8} = Ø $10^{+0.022}$

d_2: Nominal thread diameter M12 × 1 6H

L: Recommended screw-in depth L ≥ 0.8 × d_2 = 0.8 × 12 = 9.6

Installation note for ring sensors

Installation in row

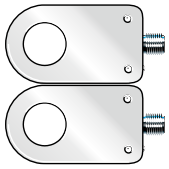

Installation in a stack

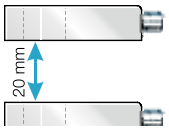

Installation note hose sensors

Centerline spacing for side-by-side mounting

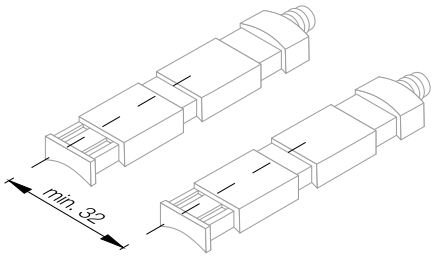

INDUCTIVE DISTANCE SENSORS WITH ANALOG OUTPUT

Distance sensor with analog output

A sensor which generates a continuously varying output signal which is a function of the distance between the sensing surface and the actuation element.

Effective distance s_e

Point in the middle of a sensor's range of linearity s_l. Serves as a reference point for further specifications.

Linearity range

Working range in which the sensor has defined linearity.

Linearity error

Maximum deviation from the straight line that connects the zero point of the measuring range to the end point or full extension. There is a linear relationship between the position or path to be measured and the output signal for a voltage, current or digitized output information. This feature may be restricted to a defined linearity range.

Limit frequency

Maximum possible number of switching operations per second. Damping is done according to EN 60947 -5-2 with standard targets on a rotating, non-conductive disc.
The area ratio of iron to non-conductor is 1:2. The rated value of the limit frequency (–3 dB limit) is reached when the output signal has dropped to approx. 70% of the original signal level.

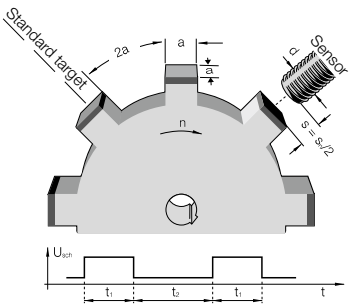

Measurement speed

Speed with which changes to the active surface of a sensor are registered, processed and outputted. Up to the specified measuring speed the distance to a linear moving object can be reliably detected. The direction of movement of the object is parallel to the sensing face of the sensor.

Repeat accuracy

Variance in the output values when approaching a mechanically prescribed position repeatedly from the same direction.

Response time

The time which a sensor requires in order to reliably and steadily change the output signal. The specified time, which was determined at the maximum measuring speed, includes both the electrical response time of the sensor and the time for the mechanical change of the damping state.

Slope

The slope is a measure of the sensitivity of the sensor with respect to a distance change. This physical relationship can be calculated for travel sensors as follows:

$$\text{Slope S [V/mm]} = \frac{U_a\,\text{max} - U_a\,\text{min}}{s_a\,\text{max} - s_a\,\text{min}}$$

or

$$\text{Slope S [mA/mm]} = \frac{I_a\,\text{max} - I_a\,\text{min}}{s_a\,\text{max} - s_a\,\text{min}}$$

Temperature drift

The temperature drift is the shift a point experiences on the actual output curve at different temperatures. The temperature drift is described by the temperature coefficient.

Temperature coefficient

Describes the deviation of the sensor output signal under the effect of a temperature change, and thus represents a quality criterion for the sensor also.

Tolerance T

A variable which defines the manufacturing tolerance band of the output curve, thereby determining the maximum sample deviation.

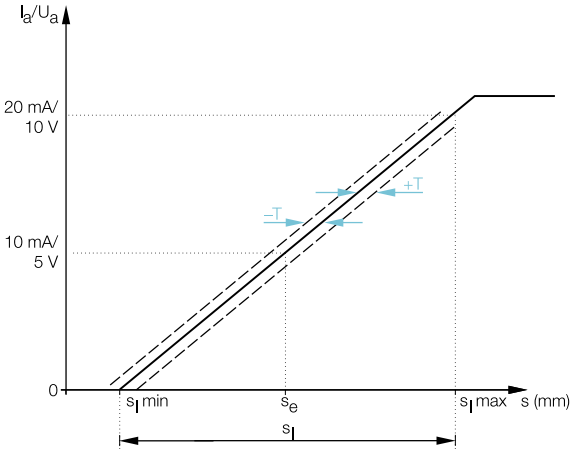

Size	Tolerance for flush sensors	Tolerance for non-flush sensors
Ø 6.5 mm	±0.125 mm	
M8	±0.1 mm	±0.15 mm
M12	±0.125 mm	±0.25 mm
M18	±0.3 mm	±0.5 mm
M30	±0.6 mm	±0.8 mm
PG 36	±0.1 mm	
20×30×8 mm	±0.125 mm	
80×80×40 mm	±1.0 mm	

Installation note for BAW R03K...

Material	Installation dimensions x
Steel	0 mm
Brass	5 mm
Aluminum	5 mm
Stainless steel	5 mm

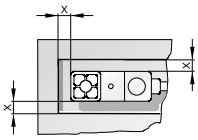

Installation note for Analog-Ringsensor

Compact analog ring sensor with 20 mm opening. Measured value changes are produced by different metallic objects or insertion depths. Applications include thickness measurement of various screws, rods or wires, and position measurement on machines by inserting conical objects into the sensor.

Testing cone for determining insertion depth (measuring range and linearization)

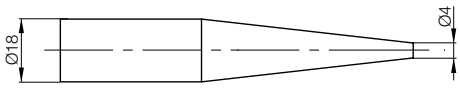

No mutual interference for front-mounting of two sensors.

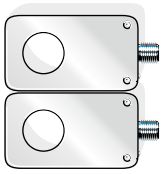

No mutual interference for parallel mounting of two sensors.

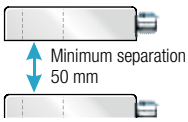

When stacking multiple sensors, the separation must be at least 50 mm.

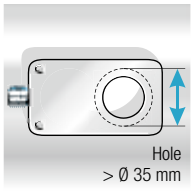

The opening should be at least Ø 35 mm for flat installation on metal surfaces.

ACCESSORIES FOR INDUCTIVE SENSORS

Mounting options for inductive sensors 40 × 40 mm

Mounting bracket BAM00JW

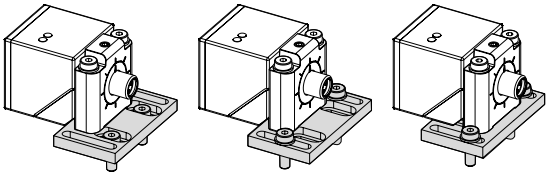

Three different mounting options

Fastener set BAM026J

- 1 mounting plate
- 2 slot nuts
- 2 cheese head screws M5 × 10 DIN 912
- 2 washers Ø 5.3, DIN 533
- 2 cheese head screws M5 × 40, ISO 4762

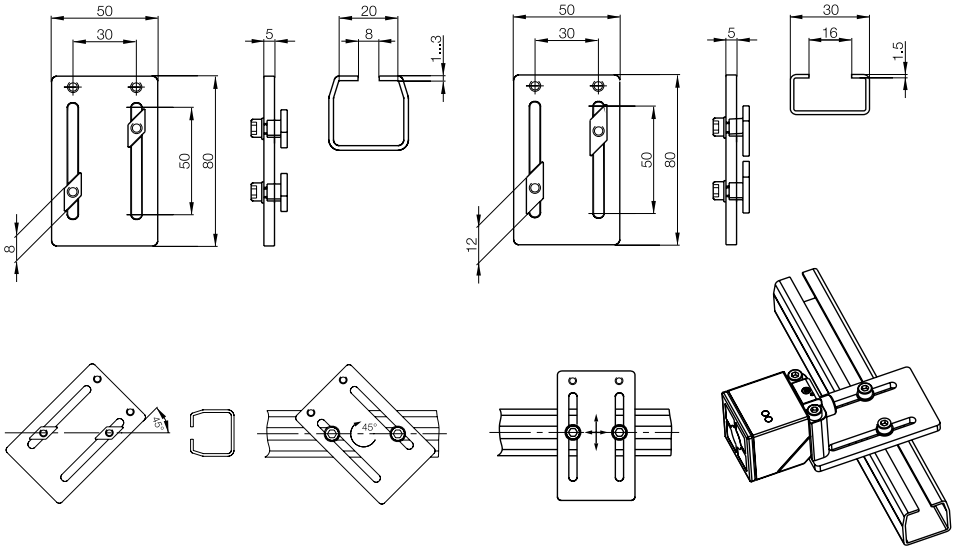

Weld protection for inductive sensors 40 × 40 mm

The BAM00K0 weld protection consists of a protective cover and a self-adhering PTFE film for protecting the active surface. If the sensor head is replaced, the welding protection must not be removed.

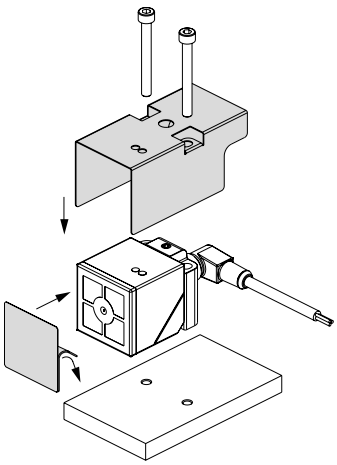

Cascading

When cascading several BES 113-FD-1 (series connection), the output (2) must be connected to the input (3) of the downstream device. The jumper between VI is not needed except for the first device. When there is a malfunction, the message appears on the last device.

The defective sensor is indicated by the first weakly illuminated LED in the cascade.

Small and space-saving, the BES 113-FD-1 can be mounted in a DIN rail according to DIN EN 50022-35.

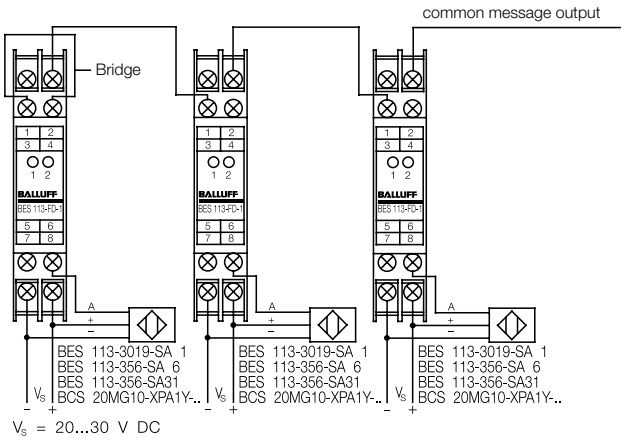

CAPACITIVE SENSORS

Principle of operation

The non-contacting capacitive sensor converts a variable of interest in technical production terms (e.g. object or level detection) into a signal which can be processed further. The function is based on the alteration in the electrical field around its active zone. The sensor consists essentially of an electrode system, oscillator, demodulator, trigger stage, output driver/switching amplifier. The electrode systems together with an active measuring electrode (sensing face) form an open plate capacitor. This is part of an RC oscillator.

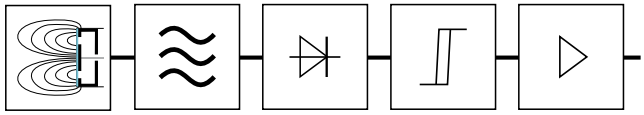

When metallic or non-metallic objects approach the sensing surface of the capacitive sensor, the capacitance of the open plate capacitor changes and the oscillator begins to oscillate. This causes the trigger stage downstream of the oscillator to trip, and the switching amplifier to change its output state. The function of the capacitive sensor can be explained using the equation for capacitance of a plate capacitor:

$C = \varepsilon 0 \times \varepsilon r \times F \times (1/S)$

εr: As a relative dielectric constant (property of the target medium)

$\varepsilon 0$: As an absolute dielectric constant (natural constant)

F: As electrode surface

S: As distance

From the above formula it follows that objects which have a sufficiently large relative dielectric constant (εr) as well as area (as a ratio with the sensing surface) and sufficiently close distance are detected by the capacitive sensor. In addition to the described universal technology in which the sensor is a component of an oscillator circuit, there are also more modern technologies which satisfy the special application requirements.

Sensor for object detection (flush)

Sensors with a straight line electrical field (no side sensitivity). These detect solid bodies, e.g. cartons, paper stacks, plastic blocks and plates as well as glass. They also detect media levels through a wall made of plastic or glass. The wall thickness may not exceed 4 mm.

Sensor for level detection (non-flush)

Sensors with a spherical electrical field. These units are designed to detect the product, bulk goods or liquids (e.g. granulate, sugar, flour, corn, sand, or oil and water) with their sensing surface, preferably by contacting the medium or through a glass or plastic wall.

Foam and residue compensation (smart level technology)

Patented technology which enables optimal detection of levels of electrically conductive (polar) media (water, lyes, acids, ...). This is accomplished with direct contact (immersion probes) and through a maximum 10 mm thick wall of plastic, glass or ceramic. The sensors which are based on this technology compensate for the dielectric effect of the container wall and enable reliable distinguishing between the target medium and its build-up, films and foaming.

Setting the sensitivity on capacitive sensors

In most cases adjusting the sensor sensitivity (capacitance value which when exceeded causes the sensor to switch) to the environment is required (pre-loading by other objects in the capture area, e.g. a container wall). The setting is done depending on the device generation using a potentiometer, a key, a separate line or IO-Link.

Definitions and Characteristic Values

Sensing surface

Actively measuring area and thereby the externally sensitive electrode/plate of the electrode system. It is generally somewhat smaller than the surface of the cover.

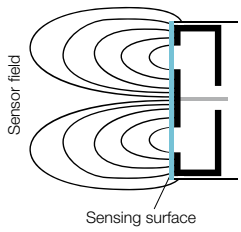

Standard target

A square plate made of Fe 360 (ISO 630), used to define sensing distances per EN 60947-5-2. Thickness is 1 mm; the side length "a" corresponds to the diameter of the inscribed circle of the active surface or 3 s_n, if the value is larger than the named diameter.

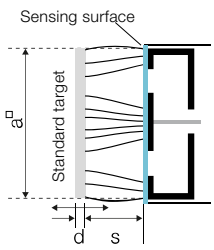

Rated operating distance S_n

Maximum achievable switching distance from the standard target under device specification (generally with s_n as shipped from the factory).

Effective operating distance S_r

The switching distance of a single proximity switch measured under specified conditions, e.g. flush mountable, rated operating voltage U_e, temperature T_a.

Hysteresis

The hysteresis is the difference in distance between the switch-on point (for an object that is approaching) and the switch-off point (for an object that is receding).

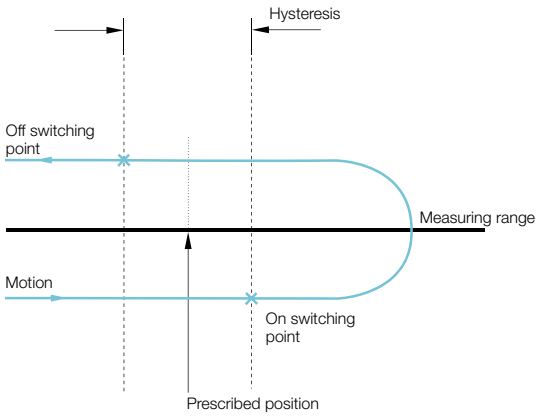

Repeat accuracy

Variance in the output values when approaching a mechanically prescribed position repeatedly from the same direction.

Switching frequency

The maximum speed at which the sensor can reliably detect an object under standardized conditions. This corresponds to the maximum number of switching operations (ON/OFF) per second. The value is dependent on the size and speed of the object and its distance from the sensing face.

Temperature drift

The temperature drift indicates by what percentage amount of Sr the switching distance may change (maximum) within a defined temperature range.

Ambient temperature T_a

The maximum permissible temperature range at which a sensor may be operated while ensuring reliable functioning of the sensor.

Degree of protection

Indicates the suitability of electrical components for various ambient conditions and protection of persons from potential hazard in their use. The degrees of protection are specified according to IEC 60529. Code letters IP (International Protection Marking) designate protection against shock hazard, ingress of solid foreign bodies, and water, for electrical equipment. Example IP69K: Protection against ingress of water at high pressure and steam cleaning per DIN 40050 Part 9.

Output functions, connections and electric characteristic values

Normally closed (NC)

Also "normally closed" – sensor principle/output function in which the switching output is inactive (not energized) when the sensor detects an object. The switching output is energized when no object is present.

Normally open (NO)

Also "normally open" – sensor principle/output function in which the switching output is active (energized) when the sensor detects an object. The switching output is not energized when no object is present. This principle is the most commonly used in automation technology.

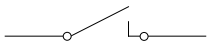

PNP

Switched positive – the load is connected to negative and the positive is switched.

NPN

Switched negative – the load is connected to the positive and the negative is switched.

PNP/NPN (push/pull)

The sensor can be used both as PNP or NPN, depending on the wiring of the load.
(The outputs from multiple devices cannot be wired in parallel)

PNP/NPN NO/NC codable

The sensor can be used both as PNP or NPN, depending on the wiring of the load.
By reversing the supply voltage (brown to –, blue to +) the switching function can be set from NO to NC.

IO-Link

The capacitive sensor can with an appropriate counterpart (master) enter into data communication (com2, 30Kbit) through its switching output. On one hand it can transmit much data (e.g. the continuous degree of damping by an object or fill medium as a numerical value), and on the other hand be configured remotely from the counterpart. If there is no master the sensor automatically goes into its normal switching mode (SIO): e.g. PNP/NC

Analog output

Output switches between $+U_B$ and $-U_B$. By reversing the supply voltage (brown to –, blue to +) the switching function can be set from NO to NC.

Connection diagrams

DC 3-/4-wire

PNP (+) sourcing

Cable/terminals

Male

NO

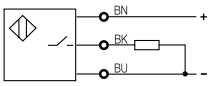

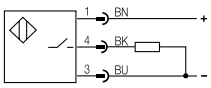

NC

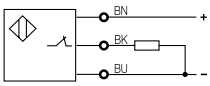

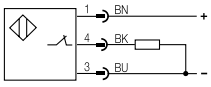

NPN (–) sinking

Cable/terminals

Male

NO

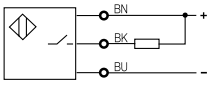

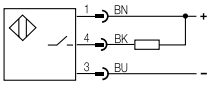

NC

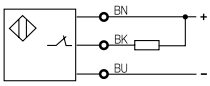

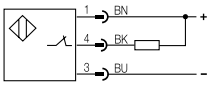

PNP/NPN selectable

NO/NC user selectable

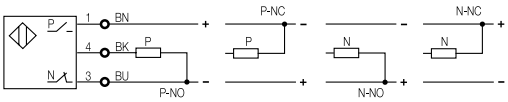

AC/DC 2-wire

Protection isolated (Protection Class II)

Cable/terminals

NO

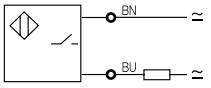

NC

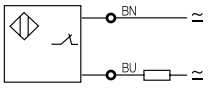

Smallest bending radius for standard PUR and standard PVC cables

Bending radius at rest: min. 5 × cable diameter
Bending radius in motion: min. 10 × cable diameter

Operating voltage U_B

Voltage range (V) n which flawless functioning of the sensor is assured.
It includes all voltage tolerances and ripple.

Voltage drop U_d

The maximum voltage loss of the switching final stage between switching output and $+U_B$ (PNP) or $-U_B$ (NPN) at the maximum specified load current.

Ripple

The maximum permissible AC voltage (peak-to-peak of U_e) which may be superimposed on the operating voltage U_S without affecting the function of the sensor.

Output current I_e

The maximum current with which the output of the sensor may be loaded in continuous operation. Also referred to as operating current.

No-load current

The maximum internal current consumption with no load connected to the switching output (in general at $U_{B\ max.}$ and actuated).

Short-circuit protection

Protective device for overload and short-circuit. Present in all our DC sensors. In the event of overload or short-circuit at the output, the output transistor is automatically switched off. As soon as the malfunction has been corrected, the output stage is reset to normal functioning.

Reverse polarity protection

Also called polarity reversal protection. This sensor technology protects against reversal of the supply voltage (plus and minus) and reversal of the connection wires (brown and blue).

Reverse protected

The sensor electronics is protected against any possible reversal combination of all the leads.

Correction factors and guide values for smart level technology

Conditions of operation and correction factors

If an electrically non-conducting actuation element (target) enters the sensor field, the capacitance changes proportionally to εr and to the immersion depth or to the distance to the sensing surface. Since the rated switching distance sn is based on a grounded standard target made of Fe , the switching distances must be corrected when using other materials:

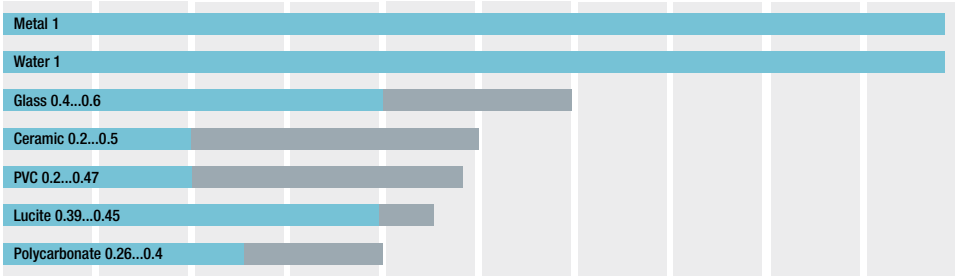

These data depend among other things on the sensor type and the object dimensions and should be used for reference only.

Application area for foam and residue compensation (smart level technology) with guide values

The media and conductivity values given here are only guide values and are for general orientation only. Basically all the media listed can be reliably detected. The differences are in the compensation ability for buildup, foaming and films when the level is falling. When in doubt, testing should be carried out, since factors such as temperature and media concentration can affect the conductivity values. Please contact us.
Conductivity values for other media on request.

Industrial waste water (select the sensor according to conductivity of the medium			
	Disinfectants (media containing chlorine)		
	Table salt solution		
Alcohol	Rinsing agents		
Marmalade	Milk/buttermilk/yogurt		
Demineralized water	Fruit juice		
Mineral oils	Coolant/lubricants		Ketchup/ mayonnaise/mustard
Plant oils	Formic acid (30 %)		Phosphoric acid (10 %)
Ammonia (30 %)	Vinegar		Sulfuric acid (10 %)
Drinking water	Cola		Calcium chloride (30 %)
Sugar solution, diluted	Honey/glue	Blood	Hydrochloric acid (40 %)
Toothpaste	Beer	Seawater	Nitric acid (12 %)
BCS Standard up to approx. 0.7 mS	Smart level technology 15 approx. 0.7...15 mS	Smart level technology 50 approx. 15...50 mS	Smart level technology 500+ approx. 50...500 mS and greater

Application and setting examples for basic sensor types

Flush sensors

Normally, the rectilinear field of flush-mounted sensors scans objects from a distance.
To ensure flawless switching of the sensor, the maximum switching distance must be checked before using the device. The following example applications show how you can do this.

Detecting solid bodies made of different materials

A flush mountable capacitive sensor will be used to detect a ceramic plate. The sensor is set to the maximum rated switching distance sn of, for example, 4mm from metal or by approximation from your hand. With this preset distance of 4 mm, move the sensor towards the ceramic plate. The rated switching distance sn to the ceramic plate has been reduced to approx. 2mm.
The distance of 2 mm is now the maximum permissible switching distance for the ceramic plate. Only adjustment for smaller sensing distances than 2mm is permitted.

Attention! To ensure that our sensors work reliably within their technical specifications, they have a greater sensing distance than the maximum rated switching distance sn indicated in the catalog. If the user now adjusts the switching distance for the above described ceramic plate to 4 mm, the sensor will operate outside the permitted range. This entails a risk that temperature and other environmental factors, plus electrical interference in the mains, may lead to faulty switching by the sensor.

Sensing levels through container walls

A flush mountable capacitive sensor will be used to detect a liquid, e.g. water, through the container wall. The dividing wall must be made of a non-conductive material, e.g. glass or plastic. The max. permissible wall thickness increases with the diameter of the sensing face: max. 4 mm (except SmartLevel technology).

The sensor's face (sensing surface) is now attached to the glass or plastic wall as tightly as possible. The tank is then filled with water until approx. 30 to 50% of the sensor's sensing surface is covered.

Particularly when small and ultra-small quantities of liquid are being scanned, and if the sensor has not been mounted in a form-fitting configuration (flat sensor surface on a tank wall with a small radius), 30 % should be chosen as a coverage area. Now turn the sensor's potentiometer counter-clockwise (less sensitivity) until it turns off (NO). Now turn the potentiometer clockwise again (greater sensitivity) until the LED and sensor turn on again. For modern versions with a teach function at 30-50 % coverage of the sensing face through the fill material hold down the key or placed a defined potential on the Teach line until the LED flashes (full teach).

Non-flush sensors

These capacitive sensors with their spherical electrical field are especially suited as level detectors for liquids, granulates or powders.

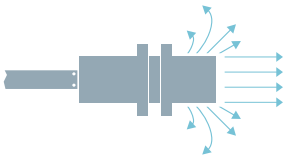

Sensing levels directly in the container

A non-flush mountable capacitive sensor will be used to detect a granulate in a tank. The sensor is now installed in the tank with its sensing surface (clear zone at the head as described in the catalog), in a configuration ensuring that the head is completely covered by the product.

Now turn the sensor's potentiometer counter-clockwise (lower sensitivity) until the LED, and thus the output signal, switch off. Now turn the potentiometer clockwise again (higher sensitivity) just enough until the LED, and thus the output signal, switch on again. Then turn the potentiometer another ½-turn (180°-rotation) clockwise. This compensates for possible temperature fluctuations or humidity changes in the product you are detecting. If a medium has a high εr, especially water, the sensor will react much more sensitively. Therefore the adjustment should be for around 50 % coverage or a sensor resp. immersion probe in the SmartLevel technology series should be used.

Detecting levels of conductive liquids directly in the container or through a container wall

Level sensors using SmartLevel technology detect liquid, conductive and even sticking liquids directly or indirectly through container walls. And they do it without adjustment using the factory default setting as long as the wall thickness does not exceed 6mm. For thicker walls or extremely conductive and adhering media the SmartLevel technology sensor can be adjusted.

Adjustment:

First install the sensor flush against the container wall. Bring level to 30...50 % coverage of the sensing face. Set the switching point on the potentiometer so that the sensor is just switching. For the new device generation with Teach key hold down or place a defined potential on the Teach line until the LED flashes.

Adjustment can also be made with a totally filled or empty container:

Full compensation: turn the potentiometer slowly counter-clockwise until the sensor turns off. Now slowly turn the potentiometer (with the sensor switched off) clockwise until the sensor turns on again. At the turn-on point then turn the potentiometer another half-turn (approx. 180°) clockwise and the SmartLevel sensor is adjusted.

Empty compensation: Now slowly turn the potentiometer (with the sensor switched off) clockwise until the sensor turns on again. At the turn-on point the potentiometer only needs to be turned 3 times by approx. 360° counter-clockwise and the SmartLevel sensor is adjusted.

In essence the switching point for a SmartLevel sensor should be at 30-50 % coverage of the sensing face with the medium.

Installation guidelines

Flush-mount Proximity switches

Flush mountable sensors can be installed with their sensing surface flush to the metal. The distance between two proximity switches (in row mounting) must be ≥ 2d.

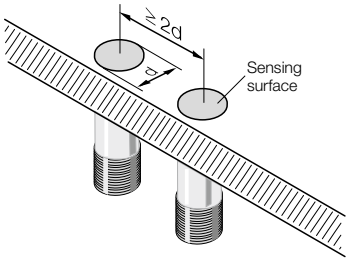

Non-flush mountable proximity switches

The sensing surface must extend ≥ 2 sn from the metallic installation medium. The distance between two proximity switches must be ≥ 2d.

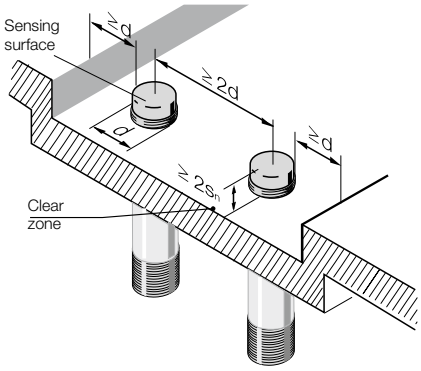

Opposing Installation of two sensors

The opposing installation of two sensors requires a minimum distance of a ≥ 4d between the sensing surfaces.

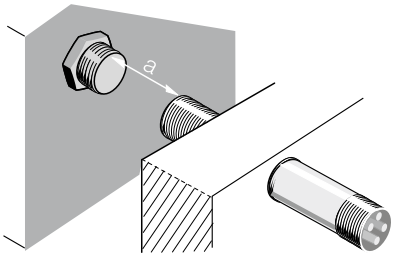

Installation note for high-temperature and pressure-resistant capacitive sensors

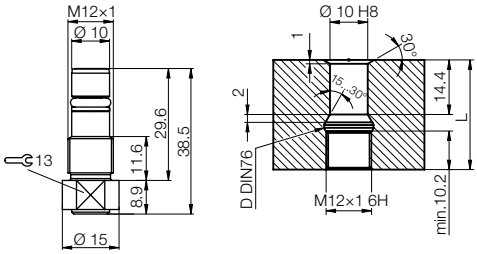

Installation and mounting options

Mounting sensors for object detection

Central mounting in a drilled hole
- M5, M8, M12, M18, M30
- Simple, flexible fastening with two nuts
- Flexible positioning in the sensor axis

Through-holes in the sensor
- Standard mounting for cubical sensors
- Simple mounting through threaded hole
- Clear positioning when replacing

Threaded holes in the sensor
- Central hole with M3 thread
- Very easy installation
- Clear positioning when replacing

Clamping a cylindrical sensor
- Suitable for all cylindrical designs
- Simple, reliable fastening
- Very flexible positioning

Installation as a leak sensor
- Simple to install
- Clear positioning when fastening
- Use of sensors with a fixed switching distance

Installation of fill-level indicators

Flange mounting
- Pressure-tight screw connection
- Can be used in metal containers
- Installation in standard bushings is possible

Hole mounting
- Simple screw connection
- Can be used for every container material
- Not pressure-tight
- Suitable for powders and granules

Installation of cable ties
- Simple, subsequent fastening
- No contact with product necessary
- For non-metallic containers

Wall mounting
- Simple fastening
- For non-metallic containers
- No drilling of container
- No contamination of the medium

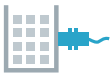

PHOTOELECTRIC SENSORS

Ambient light

The portion of light which is picked up by the receiver, but does not originate from the emitter.

Ambient temperature T_a

The maximum permissible temperature range at which a sensor may be operated while ensuring reliable functioning of the sensor.

Alarm output

Device/function on the receiver which generates a warning signal when there is a malfunction. This can be caused by contamination or mechanical maladjustment. The alarm output is activated if the received signal lies in the alarm range for a defined amount of time.

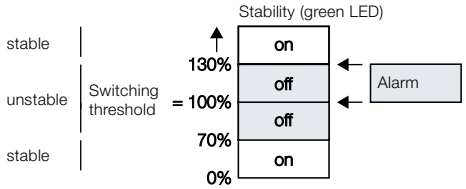

Amplifier

Amplifiers prepare signals from sensor heads or fiber optics and convert them into a switching or analog signal.

Autocollimation

Principle of reflection in which the light beam striking a reflector is reflected back to itself in parallel. The emitter and receiver use the same optical lens, so that the emitted light and the light beam reflected back from the reflector lie on the same optical axis. The advantage compared with the dual lens principle is that there is no dead zone in front of the sensor and that the switching response does not depend on the approach direction.

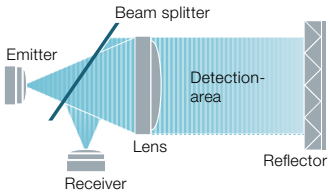

Background suppression (BGA)

Procedure for reliably distinguishing an object against its background. Can be done nearly regardless of the color and surface of the object. A reflecting background has no effect. Sensors with background suppression consist of a light emitter and several light receivers. By means of triangulation the position of an object can be determined. Depending on this position the switching distance can be set and the object thereby distinguished from the background.

Beam shape

Focused
With a focused light beam the emitter light is bundled at a certain distance into a minimum diameter. This location is referred to as the point of focus. At this point small parts detection and switching accuracy are at their greatest.

Collimated
With a collimated light beam the light emitted is radiated out in parallel. This means the size of the light spot remains virtually unchanged over the entire working range of the sensor. This allows distance-independent yet precise object detection.

Divergent
In a divergent light beam the light spot created by the emitter becomes larger with increasing object distance. In the case of through-beam sensors a divergent light beam makes possible simple alignment with the reflector or receiver.

Blind zone

Area between the active surface and minimum switching distance within which a target cannot be detected.

Color sensor

Photoelectric sensor for detecting and evaluating colors.

Contamination

Dirt and dust particles which collect on a sensor and reduce the range of photoelectric sensors and fiber objects compared with pure air. Deposits on the lens reduce its light transmission. The light is absorbed and scattered in the beam path. An oil-free source of compressed air can be used to prevent the effects of dirt and contamination due to impure air.

Correction factors (for diffuse sensors)

Values for determining the range of a sensor which is dependent on the differing reflection properties of an object. For example the range of the sensor is reduced with darker objects due to the greater light absorption.

For objects with different reflective properties the following correction factors can be applied (see table).

Correction factor	Object, surface
1	Paper, white, matte 200 g/m²
1.2...1.6	Metal, shiny
1	Styrofoam, white
0.6	Cotton fabric, white
0.5	PVC, gray
0.4	Wood, rough
0.3	Cardboard, black, shiny
0.1	Cardboard, black, matte

Dark switching

Type of photoelectric sensor in which the output becomes active when there is no light at the receiver.

Light receiver	Amplifier	Consumer
Non-illuminated	Fully modulated	Switched on
Illuminated	Not fully modulated	switched off

Detection range

Range in which the switching distance of a sensor from the standard target can be adjusted.

Diffuse sensors

Photoelectric sensor in which the emitter and the receiver are in one housing. The alignment to a detection object is largely uncritical. A target object (e. g. a standard target which is 90 % reflective) bounces a part of the light from its surface back to the receiver. If the standard target reaches the response curve, the output signal will change. The sensing distance depends on the size, shape, color and properties of the reflective object surface. Using a Kodak gray card with 90 % reflectivity (like white paper), distances of up to 2 m can be obtained.

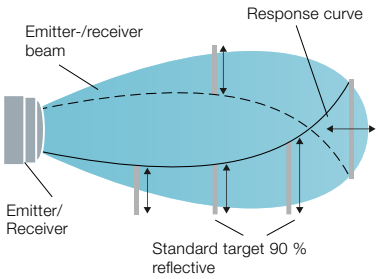

Distance sensor with analog output

A sensor which generates a continuously varying output signal which is a function of the distance between the sensing surface and the target point. It generates a linear output signal within a certain range (measuring range).

Fiber optics

Optical fiber made of glass or plastic with a diameter of down to 50 µm, consisting of several hundred individual fibers. Extremely flexible. The optical properties are not affected by moisture or aggressive media.

Mounting notes for fiber optics
The resistance of the sealing ring must be overcome when connecting the fiber optics to the base unit.

Fiber optics design

UZG type
- Polyurethane jacket
- Strain relief
- Glass optical fiber bundle
- Flexible
- Excellent chemical resistance
- Does not become brittle from oils and cooling emulsions
- Temperature resistance –20...+85 °C

MZG type
- Corrugated metal armor
- Strain relief
- Glass optical fiber bundle
- Resistant to high temperatures –20...+170 °C (up to +250 °C for a fixed installation)
- Flexible
- Crush-resistant
- Resistant to hot swarf

SMG type
- Silicon protection jacket
- Corrugated metal armor with glass optical fiber bundle strain relief
- Extended temperature range –40...+150 °C
- Highly flexible
- Crush-resistant

Mounting instruction BOS 30M with BFO 18V

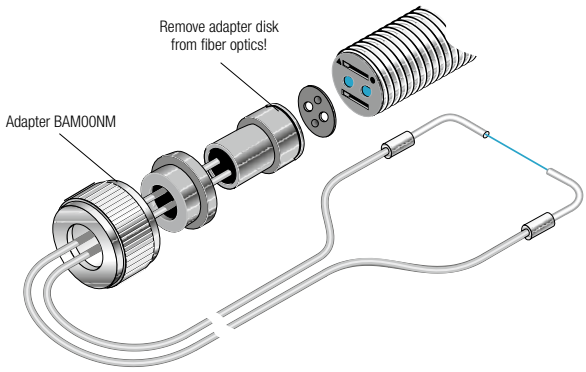

Fork sensors

U-shaped housing style of through-beam sensors with the emitter and receiver facing each other. Advantage: Ease of installation, alignment and simple electrical connection.

Gray value shift

The switching distance difference when calibrating using different object reflectivities. The sensor is calibrated for a distance using a Kodak gray card with 90 % reflection. A Kodak gray card having 18 % Reflexion is used and the resulting distance measured. The difference between these two switchpoints in % is referred to as the gray value shift. The smaller the gray value shift, the more color-independently the sensor operates.

Hysteresis

Signal difference resulting for measurement sensors when a mechanically prescribed position is approached from one side, then crosses this point and afterwards approaches this same position from the other direction. Position difference between switching point (object approaches) and switch-back point (object travels away) for switching sensors.

Lasers, laser class

Designation both for a physical effect as well as a device used to generate laser beams. Laser stands for "light amplification by stimulated emission of radiation". Laser beams are electromagnetic waves. The purpose of laser protection classes is to protect persons from laser radiation by specifying limit values. Based on this, the lasers used are classified according to a scale reflecting the degree of hazard. The calculations and associated limit values relevant for the classification are described in the standard EN 60825-1:2001-11. The grouping is based on a combination of output power and wavelength, taking into account emission duration, number of pulses and angle extension.

Balluff sensors have the following laser protection classes:
Class 1: Non-hazardous, no special caution.
Class 2: Low power, eyelid closing reflex is sufficient.

Light

The medium with which photoelectric sensors operate. In the sensor there is a change in the light intensity on an optical path (between emitter and receiver) caused by a target object. This change is evaluated by the sensor. Depending on the properties of this object and the characteristics of the optical beam, the light beam is either interrupted, reflected or scattered. The emitter usually consists of high-power red light LEDs and laser LEDs, with photodiodes or CCD (charge coupled devices) used as the receiver. Red light LEDs are used because the light beam and the detection point can be measured visually and can be adjusted more easily. In the case of laser sensors the light spot is usually more sharply delineated and is highly visible. Even over great distances.

Light band sensor

LED light band sensor
Photoelectric sensor with LEDs consisting of multiple emitters and receivers in a row in separate housings. The close arrangement of the optical components means the emitter generates a light band is generated and the entire light intensity measured at the facing receiver side.

Laser light band sensor
Photoelectric laser sensor in which a laser beam is refracted on the emitter side over a prism at a sharp angle for generating a homogeneous light band. The receiver contains a CCD (charge coupled device) used for precisely detecting edges, even at up to 2 m of distance. A CCD consists of very precisely arranged light-sensitive cells whose charge is measured and processed by the electronics.

Light grids

Photoelectric sensor in which the emitter and the receiver are located in separate housings. By placing individual emitter and receiver elements in a row a large area can be monitored. As soon as an object enters this area, a switching signal is triggered. Light grids with analog output also tell you the object location or its size.

Light-on switching

Type of photoelectric sensor in which the output becomes active when there is light at the receiver.

Light receiver	Amplifier	Consumer
Illuminated	Fully modulated	Switched on
Non-illuminated	Not fully modulated	switched off

Light refraction

A change in direction of light rays at the interface between two optical media having different optical density (e.g. glass/air). The degree of refraction depends on the quotients of the optical densities of both media and on the angle of incidence ε to the optical axis.
If a light beam travels from a dense medium, n, into a thinner one, n', its course there will show a greater angle ε'. Above $\varepsilon_{crit.}$ (critical angle at which the refracted ray travels parallel to the interface). If however it again enters the medium having density n, the result is total reflection.

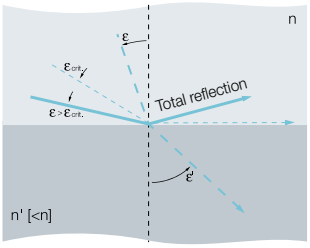

Light type

Photoelectric sensors make use of the differing wavelengths of light, with some using visible light in different colors and others using light invisible to the human eye. Photoelectric sensors use mainly the following light types:
Red light: Visible, easy to align, universal for many applications
Infrared light (IR): Invisible, essentially color-independent, ideal in dirty environments
Laser red light: Visible, physical properties of the laser make it ideal for small parts detection and for long ranges, high switching accuracy
White light: Visible, for special applications, e.g. contrast and color sensors
Ultraviolet light (UV): Hardly visible, ideal for luminescent marks

MICROmote

Photoelectric sensor system which combines an external processor unit (amplifier) with exceptionally small photoelectric sensor heads. This allows miniaturized sensor heads to be realized.

Microspot/Pin Point

LEDs with opening angles of ≤3°. These are used where small, extremely sharp light spots are required.

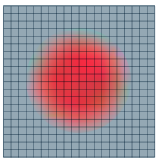
Standard red light

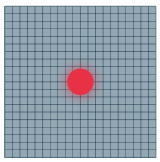
Microspot

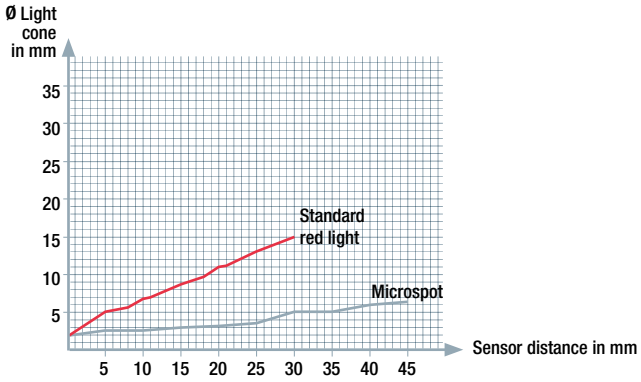

On delay

Time a sensor requires to be ready when an object enters the capture range.

Polarizing filter

Light filters which allow only a certain oscillation plane to pass and thereby effectively filters out scattered light: the light is polarized. Reduces reflections from metallic surfaces and reduces spurious switching. Also referred to as a polarizing filter.

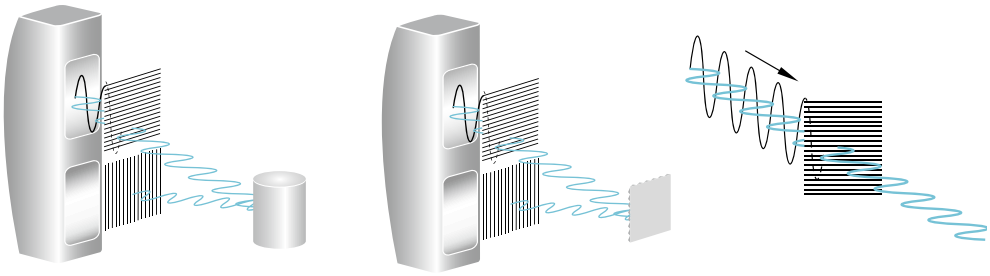

Relative humidity

Ambient condition which can affect the sensor function. For example if the lens is subjected to high relative humidity.

Reflector

Light beams extend to a straight line in free space. Upon striking an object, they are reflected. Depending on the surface properties of the object, we distinguish between the following reflection types: total reflection, retroreflection, and diffuse reflection.

In optical object detection and image processing retro-reflectors are often used. The retro-reflection is caused by two mirrors aligned vertically to each other. A light beam is again projected back through double reflection in the same direction. The angle of incidence can thus be altered in a relatively wide range. The two-dimensional principle of retroreflection can be carried over to a spatial system with three mirrors which are oriented at right angles to each other (one corner of a cube standing on its point). A light beam entering this system is totally reflected by all three surfaces and exits parallel to the incident beam.

Retroreflection

A light beam which is again projected back through double reflection in the same direction. The angle of incidence can thus be altered in a relatively wide range. Is caused by two mirrors at vertical angles to each other.

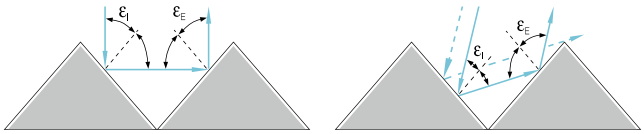

Retroreflective sensor

Photoelectric sensor in which the emitter and the receiver are in one housing. A reflector on the opposite side of the beam bounces the emitter's light back to the receiver. A target object interrupts the reflected light beam and causes a change in the output signal. With reflective surfaces it is recommended that the light reflected from the object be filtered out using a polarizing filter in front of the receiver, in order to prevent any possible fault signals.

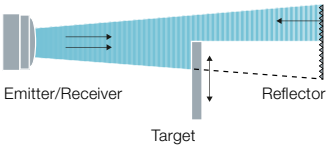

Reverse polarity protection

Also called polarity reversal protection. This sensor technology protects against reversal of the supply voltage (plus and minus) and reversal of the connection wires (brown and blue).

Sensor heads

Sensor heads consist of an emitter and receiver element. In through-beam sensors the emitter and receiver elements are housed in separate enclosures.

Short-circuit protection

Protective device for overload and short-circuit. Present in all our DC sensors. In the event of overload or short-circuit at the output, the output transistor is automatically switched off. As soon as the malfunction has been corrected, the output stage is reset to normal functioning.

Smallest bending radius for standard PUR and standard PVC cables

Bending radius at rest: min. 5 × cable diameter
Bending radius in motion: min. 10 × cable diameter

Teach-in

Method for setting sensors by pressing a button. No potentiometers or slide switches are used. Because there are defined setting increments, the advantage is that the sensor cannot be set in an unreliable range. The microcontroller also assumes control of the contamination indicator and the contamination output.

Test input

Input on a photoelectric sensor which enables function checking of the emitter and receiver by interrupting its light pulses. Contamination or maladjustment of the optical axis causes the emitter signal to reach the receiver only weakly, if at all. Therefore, the output will not switch, even though the test input is activated. The test function corresponds to a remote monitoring of the photoelectric sensor and enables a preventive system control.

Through-beam sensor

A photoelectric sensor consisting of separate emitter and receiver units which must be aligned on opposite sides of the sensing path. Long ranges of up to 50 m. When an object interrupts the light beam, the receiver switches, i.e. the output signal changes – regardless of the surface composition of the target. In unfavorable conditions (e.g. dust, moisture, oil), you achieve the best results with through-beam sensors.

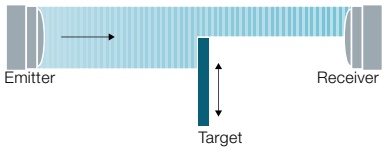

Time-of-flight sensor

Photoelectric sensor in which the light time-of-flight between emitter, the object and the receiver is measured. The duration of this time-of-flight allows the distance to the object to be determined.

Transmission

Measure for the transparency of a medium. It is defined as the ratio of: – passed to – entering light (in %). Diffuse transmission is the term which is used when the light is partially or completely diffused.

Triangulation

Procedure whereby the light cones of the emitter and receiver lobe of a through-beam system intersect each other at a narrow angle. A target object is detected where the lobes overlap. The emitter light which is reflected or diffused from objects outside this limited zone cannot be registered by the photo-receiver. Benefit: With triangulation, relatively small changes in distance can be recognized (e.g. slots, offsets on shafts). Color and shape of the object have very little effect.

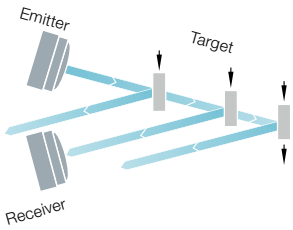

Turn-off time

The time a sensor requires to respond when the target leaves the detection range at a factor of 0.5 of the radiant power.

Alphanumeric Index

SORTED BY ORDERING CODE

BAE00KJ	BAE SA-CS-026-YP-BP02	331
BAE00KH	BAE SA-CS-025-YP-BP02	331
BAE00L9	BAE SA-CS-025-YP-BP00,3-GS04	331
BAE00LA	BAE SA-CS-026-YP-BP00,3-GS04	331
BAE00LC	BAE SA-CS-027-YI-BP00,3-GS04	331
BAE00N4	BAE SA-OH-038-IC-DV02	617
BAE00N5	BAE SA-OH-038-IC-S75G	617
BAE00N6	BAE SA-OH-038-UA-S75G	617
BAE00N7	BAE SA-OH-040-PP-S75G	619
BAE00NE	BAE SA-OH-035-PP-DV02	617
BAE00NF	BAE SA-OH-035-PP-S75G	617
BAE00NH	BAE SA-OH-038-UA-DV02	617
BAE00NJ	BAE SA-OH-040-PP-DV02	619
BAE00PR	BAE SA-OH-035-NP-DV02	617
BAE00PT	BAE SA-OH-035-NP-S75G	617
BAE00Y7	BAE SA-OH-050-PP-S75G	619
BAE00YC	BAE SA-OH-050-PP-DV02	619
BAW000J	BAW G06EE-UAF20B-EP03-K	263
BAW000T	BAW M08EI-UAD15B-BP03	263
BAW001T	BAW M18ME-ICC50B-BP03	265
BAW002F	BAW M18MI-BLC50B-S04G	267
BAW002H	BAW M18MI-IAC50B-S04G	267
BAW002W	BAW M30ME-UAC10B-S04G	267
BAW002Y	BAW M30ME-UAC15F-S04G	267
BAW003E	BAW Z01AC-UAD50B-DP03-K	269
BAW003W	BAW Z05AC-BLD50B-BP00,75-GS04	269
BAW004H	BAW M12ME-UAC70G-S04G	265
BAW004K	BAW M12ME-UAC35C-S04G	263
BAW004M	BAW M12MI-BLC35C-S04G	265
BAW005Y	BAW M30EE-ICD10B-S04G-L01	267
BAW005Z	BAW R03KC-UAA40B-BP03-505	269
BAW006A	BAW M12MF-IAC35C-S04G	263
BAW0011	BAW M12ME-UAD50B-BP01	265
BAW0026	BAW M18ME-UAE50B-S04G-K	265
BAW0029	BAW M18MG-UAC16F-S04G-K	267
BAW0034	BAW R06AC-UAF20B-S49G	269
BAW0040	BAW Z08EO-UAD20B-S04G-H11	263
BAW0056	BAW M12MH-BLC70G-S04G	265
BAW0069	BAW M12MF-ICC35C-S04G	263
BCS00A1	BCS M18T4H1-XXS10H-SZ02-T08	335
BCS00A2	BCS M30T4G1-XXS20H-SZ02-T08	337
BCS00A3	BCS S10T401-XXSFNC-SZ02-T07	335
BCS00A6	BCS S03T401-PSCFNH-KM16-T02	339
BCS00A9	BCS S03T401-NOCFNH-KM16-T02	339
BCS00AU	BCS M12TTG1-PSM40C-ET02	289
BCS000J	BCS M18KM3-UOT80G-BV02	335
BCS000K	BCS M18KM3-UST80G-BV02	335
BCS00LL	BCS M18BBH1-PSC15H-EP02	309
BCS00LM	BCS M18BBG2-PSC15H-S04K	309
BCS00LT	BCS M18BBG2-POC15H-S04K	309
BCS00M2	BCS M18BBN1-NSC80D-EP02	291
BCS00M8	BCS M18BBI3-PSC80D-S04K	291
BCS00ME	BCS M18B4G2-PSC15H-S04K	311
BCS00MF	BCS M18B4I3-PSC80D-S04K	291
BCS00MR	BCS M30B4I2-PSC15D-S04K	293
BCS00MY	BCS M30B4E2-PSC25H-S04K	313
BCS00N6	BCS M30B4E1-PSC25H-EP02	313
BCS00NA	BCS M30BBI2-PSC15D-S04K	291
BCS00NH	BCS M30BBE2-PSC25H-S04K	313
BCS00NM	BCS M30BBI1-PSC15D-EP02	291
BCS00NT	BCS M30BBE1-PSC25H-EP02	311
BCS00NZ	BCS M18BBN1-PSC80D-EP02	291
BCS00P0	BCS M12B4G2-PSC40D-S04K	289
BCS00P4	BCS M12B4E2-PSC80H-S04K	309
BCS00PC	BCS M12B4G1-PSC80H-EP02	309
BCS00PJ	BCS M12BBG2-PSC40D-S04K	289
BCS00PN	BCS M12BBE2-PSC80H-S04K	307
BCS00PP	BCS M12BBE2-POC80H-S04K	307
BCS00PU	BCS M12BBI1-PSC40D-EP02	287
BCS00R0	BCS M12BBG1-PSC80H-EP02	307
BCS00R1	BCS M12BBG1-POC80H-EP02	307
BCS00R4	BCS M12B4I1-PSC40D-EP02	289
BCS00TR	BCS Q40BBAA-GPC20C-EP02	295
BCS000U	BCS M30KN2-UOT15G-AV02	337
BCS00U5	BCS Q40BBAA-POC20C-EP00,3-GS49	295
BCS00U6	BCS Q40BBAA-PSC20C-EP00,3-GS49	295
BCS00UJ	BCS G34OOI2-PSC15D-S04K	293
BCS000W	BCS M30KN2-UST15G-AV02	337
BCS00W7	BCS G20L4Q-PAC10C-EV03-D03	337
BCS000Y	BCS F01CP01-XXS10C-EP02-GZ01-002	337
BCS00ZL	BCS S44KK01-PSCFNG-EP00,3-GS49	315
BCS001A	BCS D18T403-XXS30C-EP02-GZ01-002	325
BCS001C	BCS D18T404-XXS50C-EP02-GZ01-002	325
BCS001F	BCS D22T405-XXS10C-EP02-GZ01-002	325
BCS001H	BCS D22T408-XXS10C-EP02-GZ01-002	327
BCS001L	BCS G06T4E1-PSM15C-EP02	287
BCS001R	BCS G06T4D2-PSM15C-S49G	287
BCS001Y	BCS G06T4E1-PSM30G-EP02	307
BCS002A	BCS M08T4E2-PSM15C-S49G	287
BCS002M	BCS M08T4E2-PSM30G-S49G	307
BCS002T	BCS G10T4H-PSM40C-EP02	287
BCS003A	BCS D30T401-PSC15C-EP02	291
BCS003F	BCS D30T401-NOC15C-EP02	291
BCS003K	BCS D50OO02-YPC25C-EV02	293
BCS004K	BCS M30BBM3-PPC20C-EP02	293
BCS004M	BCS M30BBM2-PPM20C-S04G	293
BCS004T	BCS M30B4M2-PPM20C-S04G	293
BCS006A	BCS M18T4G2-PSC15G-S04G	311
BCS006H	BCS S01T401-PSCFNG-KM16-T02	339
BCS006J	BCS S01T401-POCFNG-KM16-T02	339
BCS006M	BCS S02T401-PSCFNG-KM16-T02	339
BCS006Z	BCS M12TTG1-PSM80G-ET02	307
BCS007F	BCS M30BBM2-PPC30G-S04G	313
BCS007L	BCS M30T4M2-PPC30G-S04G	313
BCS007Y	BCS M30BBM2-PPCFAG-S04G	311
BCS008A	BCS M18TTI2-PSCFAG-AT02	309
BCS0010	BCS G04T4D-XXS10C-EP02-GZ01-002	323
BCS010A	BCS S44KK02-POCFAG-EP00,3-GS49	315
BCS010L	BCS S44KK01-GPCFAG-EP02	315
BCS010M	BCS S44KK02-GPCFAG-EP02	315

BCS010N	BCS S44KK03-GPCFAG-EP02	315
BCS0011	BCS M05T4C-XXS10C-EP02-GZ01-002	323
BCS011E	BCS S04K501-PICFNG-S04G-T50	317
BCS011F	BCS S04K501-PSCFNG-S04G-T50	317
BCS011H	BCS S04K501-POCFNG-S04G-T50	317
BCS0012	BCS G06T4B-XXS15C-EP02-GZ01-002	323
BCS012A	BCS R08RRE-PSM80C-EP02	295
BCS012C	BCS R08RRE-POM80C-EP02	295
BCS012H	BCS R08RRE-PSMFHC-EP02	301
BCS012J	BCS R08RRE-POMFHC-EP02	301
BCS012N	BCS R08RRE-PIM80C-EP00,3-GS04	295
BCS012P	BCS R08RRE-PIMFHC-EP00,3-GS04	301
BCS012T	BCS R08RRE-PSM80C-EP00,3-GS75	295
BCS012U	BCS R08RRE-POM80C-EP00,3-GS75	295
BCS012Z	BCS R08RRE-PSMFHC-EP00,3-GS75	301
BCS0013	BCS G06T4B-XXS30G-EP02-GZ01-002	323
BCS013E	BCS Z094401-XXS20B-SZ02-T07	335
BCS0014	BCS M08T4C-XXS15C-EP02-GZ01-002	325
BCS0015	BCS M08T4C1-XXS30G-EP02-GZ01-002	325
BCS0016	BCS G10T4B-XXS40C-EP02-GZ01-002	323
BCS0017	BCS G10T4C-XXS80G-EP02-GZ01-002	323
BCS017H	BCS M12K4G1-GSM50C-EP02	289
BCS017K	BCS M12K4D2-GSM50C-S04G	289
BCS018A	BCS Q40BBAA-PSICFHC-EP00,3-GS04	303
BCS018T	BCS S30KK01-GPSFHF-EV05	317
BCS018Z	BCS S30KK02-GPSFHF-EV05	317
BCS0019	BCS M12T4D1-XXS80G-EP02-GZ01-002	325
BCS0022	BCS G06T4D2-PSM30G-S49G	307
BCS0026	BCS M08T4E1-PSM15C-EP02	287
BCS0070	BCS M12TTG1-POM80G-ET02	307
BCS0073	BCS M18TTI2-PSC15G-AT02	311
BCS0077	BCS M30TTH2-PSC30G-AT02	313
BCS0084	BCS D50OO04-PPCFAC-EV02	301
BCS0086	BCS M30TTH2-PSCFAG-AT02	311
BCS0105	BCS S44KK01-PSCFAG-EP00,3-GS49	315
BCS0109	BCS S44KK02-PSCFAG-EP00,3-GS49	315
BCS0130	BCS R08RRE-POMFHC-EP00,3-GS75	301
BCS0133	BCS Q40BBAA-GPCFHC-EP02	303
BCS0134	BCS Q40BBAA-PSCFHC-EP00,3-GS49	303
BCS0135	BCS Q40BBAA-POCFHC-EP00,3-GS49	303
BCS0179	BCS M12K4D2-GSM80G-S04G	309
BCW0001	BCW M18B4M1-ICM80C-DV02	335
BCW0004	BCW F03EA85-XXSFNC-EP00,3-GZ01	337
BES00AA	BES M30MI-PSC15B-BV02	81
BES00A1	BES M30MI-PSC10B-BV03	79
BES00A3	BES M30MI-PSC10B-S04G	83
BES00A4	BES M30MI-PSC10B-S04K	83
BES00AC	BES M30MI-PSC15B-BV03	81
BES00AF	BES M30MI-PSC15B-S04G	85
BES00AY	BES M30MM-PSC30F-BV02	87
BES00AZ	BES M30MM-PSC30F-S04K	89
BES00CN	BES M08EF-NSC15B-BP02-003	29
BES00CR	BES M08EF-POC15B-BP02-003	29
BES00CW	BES M08EF-PSC20B-BP02-003	31
BES00LR	BES 516-3028-G-E4-Y-PU-05	81
BES00LT	BES 516-3028-G-E4-Y-S4-01	81
BES00LU	BES 516-3028-G-E5-Y-S4	85
BES00Y0	BES 516-362-E5-Y-S4	87
BES01EU	BES 516-341-H2-Y	707
BES01EW	BES 516-341-H2-Y-S4	707
BES01FC	BES 516-346-H2-Y	707
BES01FE	BES 516-346-H2-Y-S4	707
BES01FF	BES 516-346-H2-Y-S49	707
BES01JC	BES 516-362-G-S4-H	89
BES01NP	BES G06EF-PSC40F-S49G	25
BES000E	BES G06ED-PSC40F-BP02	25
BES00E5	BES M12MD-PSC40B-BP02-003	49
BES00EF	BES M12ME-PSC40B-S04G-003	55
BES00EY	BES M18ME-PSC50B-S04G-003	69
BES000L	BES M08EB-POC40F-S49G	43
BES000M	BES M08EB-PSC40F-S49G	43
BES00PK	BES 516-325-E5-C-S4	51
BES00PW	BES 516-325-G-E4-C-S4-00,5	51
BES00PY	BES 516-325-G-E5-C-S4	55
BES00PZ	BES 516-325-G-E5-C-S49	55
BES00R5	BES 516-326-E4-C-S4-00,2	69
BES00R6	BES 516-326-E5-C-S4	69
BES00RC	BES 516-326-G-E5-C-S4	71
BES00RE	BES 516-327-E4-Y-01,5	79
BES00RP	BES 516-327-E5-Y-S4	83
BES00RT	BES 516-327-G-E4-Y-03	81
BES00RW	BES 516-327-G-E5-Y-S4	85
BES000T	BES M08ED-NSC40F-BV02	41
BES00UY	BES 516-356-E5-C-S4	59
BES00WM	BES 516-360-E5-Y-S4	75
BES000Y	BES M08ED-PSC40F-BP02	41
BES00YT	BES 516-370-E5-C-S4	51
BES00Z0	BES 516-370-G-E5-C-S4	57
BES0001	BES M12MI-PSC40B-BV03	51
BES001A	BES M08EH-NSC40F-S04G	45
BES001C	BES M08EH-NSC40F-S49G	43
BES01C7	BES 516-325-G-S4-C	57
BES01C8	BES 516-325-S4-C	53
BES01CW	BES 516-326-S4-C	71
BES001E	BES M08EH-POC40F-S04G	45
BES01EA	BES 516-327-G-S4-C	87
BES01EC	BES 516-327-G-S4-H	87
BES01EE	BES 516-327-S4-C	85
BES01ET	BES 516-340-H2-Y	707
BES001F	BES M08EH-POC40F-S49G	43
BES01FJ	BES 516-347-MO-C-03	91
BES01FK	BES 516-347-MO-C-05	91
BES01FM	BES 516-347-MO-C-PU-05	91
BES01FN	BES 516-347-MO-C-S4-00,2	93
BES01FR	BES 516-347-MO-C-S49	93
BES01FT	BES 516-347-MO-C-S49-00,2	93
BES001H	BES M08EH-PSC40F-S04G	45
BES01H6	BES 516-356-S4-C	61
BES01HW	BES 516-360-G-S4-H	77
BES01HY	BES 516-360-S4-C	77
BES001J	BES M08EH-PSC40F-S49G	43
BES01JE	BES 516-362-S4-C	89
BES01JW	BES 516-367-S4-C	71
BES01K6	BES 516-370-S4-C	55
BES001L	BES M08MG-GSC20B-BV02	139
BES01MM	BES 517-351-NO-C-03	99
BES01MT	BES 517-351-NO-C-S49-00,2	99
BES01N1	BES 517-398-N1-C	99
BES01N2	BES 517-398-N2-C	99
BES01N5	BES 517-398-NO-C-03	97
BES01N6	BES 517-398-NO-C-05	97
BES01N8	BES 517-398-NO-C-PU-03	99
BES01N9	BES 517-398-NO-C-PU-05	99
BES01NA	BES 517-398-NO-C-S49-00,2	99
BES01NH	BES 517-399-NO-C-03	97
BES01NY	BES G08EG-PSC15B-BV02	27
BES001P	BES M08MG-USC20B-BP03	139
BES01P5	BES M08EG-NSC25F-S04G	43
BES01P6	BES M08EG-POC25F-S04G	43
BES01P9	BES M08EG1-PSC40F-S04G	43
BES001T	BES M08MG-USC20B-BV02	139
BES001U	BES M08MG-USC20B-BV03	139
BES001W	BES M08MG-USC20B-BV05	139
BES001Z	BES M08MG-GSC20B-BP00,3-GS04	141
BES02AC	BES 516-217-E5-E-S27	89
BES02AE	BES 516-217-E5-E-S5	89

BES02ET	BES 515-326-E5-T-S4	69
BES02F0	BES 515-327-E5-T-S4	83
BES02FP	BES 515-449-SA7-S21	53
BES002H	BES M08MI-NSC15B-BV03	29
BES02P3	BES 516-326-SA96-G-E5-Y-S4	71
BES02YJ	BES M30MG1-PSC40F-S04G	91
BES02YL	BES M30MI1-POC22B-S04G	91
BES02YM	BES M30MI1-PSC22B-S04G	91
BES03AR	BES 516-325-G-S4-L	57
BES03EJ	BES G06MH-PSC30B-BP00,3-GS49	25
BES003F	BES M08MI-PSC20B-BP02	31
BES003J	BES M08MI-PSC20B-BP05	31
BES03P4	BES G06EH-PSC20B-S49G	23
BES03P5	BES G06EH-PSC40F-S49G	25
BES03R9	BES G06EE-PSC20B-S49G-003	23
BES01P0	BES M04EC-PSD06B-BP02	17
BES01P3	BES M08ED-PSC25F-S04G	43
BES01P7	BES M08EG-PSC15B-S49G	35
BES01P8	BES M08EG-PSC25F-S04G	43
BES01PC	BES M08EH-NSC15B-S04G	35
BES01PE	BES M08EH-POC15B-S04G	35
BES01PH	BES M08EH-PSC20B-S04G	39
BES01PN	BES M12EG-PSC80F-S04G	61
BES01PY	BES M12MD-PSC80F-S04G	61
BES01W0	BES R01ZC-NAC70B-BP05	101
BES01W2	BES R01ZC-PAC70B-BP00.2-GS04	103
BES01W3	BES R01ZC-PAC70B-BP00.5-GS04	103
BES01W4	BES R01ZC-PAC70B-BP03	101
BES01WE	BES R01ZC-PSC70B-BP00.2-GS49	101
BES01WF	BES R01ZC-PSC70B-BP00.3-GS49	101
BES001Y	BES M08ME1-USC20B-S04G	141
BES01YZ	BES R05KB-NSC20B-EP05	95
BES01Z2	BES R05KB-POC40B-S49A	97
BES01Z5	BES R05KB-PSC20B-EP05	95
BES01Z7	BES R05KB-PSC20B-S49A	97
BES01Z8	BES R05KB-PSC40B-EP00,3-GS04	97
BES01ZA	BES R05KB-PSC40B-EV02	95
BES01ZC	BES R05KB-PSC40B-EV03	97
BES01ZE	BES R05KB-PSC40B-S49A	97
BES01ZK	BES 516-344-H2-Y	707
BES01ZN	BES M12MI-PSH80B-S04G	63
BES01ZT	BES M08MI-NSC40B-S49G	47
BES01ZW	BES M08MI-PSC40B-S49G	47
BES02A5	BES 516-217-E4-E-03	87
BES02AU	BES 516-420-E4-L-02	65
BES02AW	BES 516-420-E4-L-05	65
BES02C5	BES 516-437-E4-L-02	73
BES02C7	BES 516-437-E5-L-S21	75
BES02C9	BES 516-449-BO-L-05	47
BES02CT	BES R05KB-USU20B-EV02	95
BES02CU	BES R05KB-USU20B-EV03	95
BES02CY	BES R05KB-USU40B-EV02	95
BES02E9	BES 515-215-E5-E-S21	83
BES02EU	BES 515-326-S4-C	71
BES02F1	BES 515-327-S4-C	85
BES02FN	BES 515-362-S4-C	89
BES02FU	BES M12EI-PSC40B-S04G	57
BES02H0	BES M18EI-PSC80B-S04G	73
BES02H5	BES 516-105-SA2-05	225
BES02H6	BES 516-105-SA5	227
BES02H7	BES 516-114-SA1-05	227
BES02HE	BES 516-125-SA1-05	229
BES02HU	BES 516-325-SA19-03	225
BES02HW	BES 516-325-SA19-05	225
BES02J5	BES 516-325-S4-CW	211
BES02J9	BES 516-326-S4-CW	211
BES02JH	BES 516-327-S4-CW	211
BES02JM	BES 516-356-S4-CW	211
BES02JZ	BES M12MF1-PSC30A-S04G-W	189
BES002K	BES M08MI-NSC15B-S49G	37
BES02K0	BES M12MF1-PSC30A-S04G-W01	189
BES02K4	BES M12ML-PSC30A-S04G-W01	191
BES02K5	BES M12ML-PSC80E-S04G-W	191
BES02KC	BES M18MI-PSC70B-S04G-W	217
BES02KM	BES M30ML-PSC10A-S04G-W	193
BES02KN	BES M30ML-PSC10A-S04G-W01	193
BES02L6	BES 516-3005-FO-N-03	255
BES02LA	BES 516-324-EO-N-03	255
BES02LE	BES 516-325-E3-N-PU-05	255
BES02N3	BES M08EH1-NSC20B-S04G-S	161
BES02N4	BES M08EH1-NSC20B-S04G-S01	161
BES02N5	BES M08EH1-PSC20B-S04G-S	203
BES02N6	BES M08EH1-PSC20B-S04G-S01	203
BES02NA	BES M12EI-PSC40B-S04G-S	163
BES02NC	BES M12EI-PSC40B-S04G-S01	163
BES02NK	BES M18EI-PSC72B-S04G-S01	173
BES02NR	BES M18MF-USC70B-S04G	149
BES002P	BES M08MI-NSC20B-BV02	31
BES02PU	BES M08MH1-PSC20B-S04G-101	217
BES02PW	BES M08MH1-PSC30B-S04G-101	217
BES02TN	BES IKU-031.28-S4	105
BES002U	BES M08MI-NSC20B-S49G	39
BES02W6	BES M08MH-PSC40B-S49G-507	47
BES02W7	BES M08MH1-NSC30B-S04G	41
BES02W9	BES M08MH1-PSC30B-S04G	41
BES02WH	BES M12EG1-PSC60Z-S04G-S11	163
BES02WK	BES M12MC1-PSC10F-S04G	63
BES02WM	BES M12MD1-PSC60B-S04G	63
BES02WR	BES M12MF1-PSC10F-S04G	63
BES02WY	BES M12MG1-POC60B-S04G	63
BES02WZ	BES M12MG1-PSC60B-S04G	63
BES02Y1	BES M18EF1-PSC20F-S04G-S	173
BES02Y3	BES M18EG1-PSC10Z-S04G-S11	175
BES02YC	BES M30EE1-PSC40F-S04G-S	177
BES02YF	BES M30EG1-PSC20Z-S04G-S11	177
BES02YR	BES M08EG-PSC15A-S49G-W	189
BES02YT	BES M08EG1-PSC15A-S04G-W	189
BES02YZ	BES M08EG1-PSC15S-S04G-S	203
BES02Z2	BES M12EG1-PSC20N-S04G-S	203
BES02Z3	BES M12EG1-PSC20S-S04G-S	203
BES02Z8	BES M18EG1-PSC50N-S04G-S	205
BES02Z9	BES M18EG1-PSC50S-S04G-S	205
BES02ZE	BES M18MN-USU80B-S21G	73
BES02ZH	BES M30EG1-PSC80N-S04G-S	207
BES02ZJ	BES M30EG1-PSC80S-S04G-S	207
BES02ZR	BES G06MD-GNX10B-EV02-EEX	237
BES02ZT	BES M08MD-GNX10B-EV02-EEX	237
BES02ZU	BES M12ME-GNX40B-S04G-EEX	239
BES02ZW	BES M18ME1-GNX80B-S04G-EEX	243
BES02ZY	BES M30ME1-GNX15B-S04G-EEX	245
BES02ZZ	BES Q40KFU-GNX20B-S92G-EEX	247
BES003C	BES M08MI-PSC15B-S49G	37
BES03FH	BES M18MF-GSC70B-S04G-U	149
BES03FJ	BES M18MG-GSC70B-BX00,3-GS04-U	147
BES03H6	BES M05EG-PSC08B-BP02	157
BES03HH	BES M08MG-UOC20B-BV03	141
BES03HM	BES M12MG-UOC30B-BV03	143
BES03JA	BES IKVS-010.23-G-S4	259
BES03JC	BES IKVS-015.23-G-S4	259
BES03JH	BES IKVS-025.23-G-S4	259
BES03JM	BES M05EG-PSC08B-BP00,2-GS49	159
BES003K	BES M08MI-PSC20B-BV02	33
BES03KL	BES M30MF-GSC15B-S04G-U	151
BES03L7	BES M05ED-PSD08B-BP02-R03	159
BES03LC	BES M05ED-PSD08B-BP00,3-GS49-R03	159
BES03LE	BES M05ED-POD08B-BP00,3-GS49-R03	159

BES003M	BES M08MI-PSC20B-BV05	33
BES03M5	BES R04KC-GNX15B-EP02	255
BES03NZ	BES M05ED-PSC08B-BP02-R50	159
BES003P	BES M08MI-PSC20B-S49G	39
BES03P6	BES M08MI-POC15B-S49G	37
BES03PN	BES Q40KHU-PAC20B-S04G	107
BES03RM	BES M18MG-PSC16F-S04G	77
BES03RP	BES M18MI-POC80B-S04G	73
BES03T5	BES M08MH1-POC20B-S04G	39
BES03TH	BES M08MI-POC20B-BV02	33
BES03TL	BES M08MI-PSC20B-BP10	33
BES03UY	BES M08EE1-PSC20B-S49G-S	159
BES03YP	BES M08MG1-PSC20A-S04G-W	189
BES003Z	BES M12MF-GSC30B-S04G	145
BES03Z3	BES M08EE1-NSC20B-S49G-S	159
BES03Z8	BES M04EC-PSC10B-EP02	17
BES03ZJ	BES M04EC-NSC10B-EP02	17
BES04AT	BES 515-326-SA49-D-TF-05	225
BES04AU	BES 515-327-SA22-D-TF-05	227
BES04C7	BES 515-360-SA13-D-TF-05	227
BES04C8	BES 515-362-SA4-D-TF-05	229
BES04CK	BES 515-325-SA74-D-TF-02	223
BES04CL	BES 515-356-SA35-D-TF-02	225
BES04F1	BES M18MD-PSC80B-BP05-003	67
BES04FK	BES M12MI-PSIC20C-S04G	53
BES004N	BES M12MG-PSC80F-S04G	61
BES004T	BES M12MG-USC30B-BV02	141
BES04TU	BES G10ED-PSC08B-EP00,3-GS49	47
BES04Z5	BES M12EI-PSC40A-S04G-S	203
BES0005	BES G06EB-PSC40F-S49G	25
BES05AL	BES M18ME-PSC12E-S04G-W08	193
BES05AM	BES M18MI-PSC12E-S04G-W08	193
BES05ER	BES M18ME-PSC12B-S04G	79
BES05EU	BES M18MI-PSC12B-S04G	79
BES05EY	BES M18MG-PSC20F-S04G	79
BES05FN	BES M08EM-PSD20B-ET05-T	223
BES05K7	BES M18EG1-PSC80A-S04G-S	205
BES05K8	BES M18EG1-PSC80S-S04G-S	207
BES05K9	BES M18EG1-PSC80N-S04G-S	207
BES05KT	BES M12MI-PSC40A-S04G-W08	191
BES05L3	BES M18MF2-PSC80F-BV02-EXD	243
BES05L4	BES M30MF2-PSC10B-BV02-EXD	243
BES05L5	BES M30MF2-PSC15F-BV02-EXD	245
BES05L9	BES M18MF2-PSC80F-BV02-EXE	243
BES05LA	BES M30MF2-PSC10B-BV02-EXE	245
BES05LC	BES M30MF2-PSC15F-BV02-EXE	245
BES05M5	BES M30EG2-PSC10B-BV02-EXF	243
BES005N	BES M12MI-POC40B-S04G	57
BES05N0	BES M18MH2-GNX80F-S04G-EXC	243
BES05N1	BES M30MH2-GNX10B-S04G-EXC	245
BES05N2	BES M30MH2-GNX15F-S04G-EXC	247
BES05N4	BES M18ED-PSC50B-GT05-T	227
BES05N5	BES M30N1-PSC10B-GT05-T	229
BES05N6	BES Q40KG-X20F-SZ03	231
BES05N7	BES Q08EC-PSD20B-ES05	229
BES05N8	BES Q12EC-PSD40B-ES05	229
BES05N9	BES Q40KG-PSD25F-S04G	231
BES05NC	BES M18EG1-PSC80A-S04G-S02	207
BES05NE	BES M12MG2-GNX20B-BT02-EXA	237
BES05NF	BES M12MG2-GNX40F-BT02-EXA	239
BES05NJ	BES M18MH2-GNX80F-BT02-EXA	243
BES05NK	BES M30MH2-GNX10B-BT02-EXA	245
BES05NL	BES M30MH2-GNX15F-BT02-EXA	245
BES05NM	BES M12MG2-GNX20B-BT02-EXB	237
BES05NN	BES M12MG2-GNX40F-BT02-EXB	239
BES05NR	BES M18MH2-GNX80F-BT02-EXB	243
BES05NT	BES M30MH2-GNX10B-BT02-EXB	245
BES05NU	BES M30MH2-GNX15F-BT02-EXB	247
BES05PN	BES M18MI-PSC80A-S04G-W09	191
BES05PP	BES M18MI-PSC80A-S04G-W10	191
BES05PR	BES M18ME-PSC80A-S04G-W10	191
BES05RN	BES M05ED-PSD08B-ES01-GS49-T	223
BES05RP	BES M05ED-PSD08B-ES02-T	223
BES05RR	BES M05ED-PSD08B-ES05-T	223
BES05U8	BES M08MM-PSC40B-BP00,3-GS49	47
BES05U9	BES M08MM-PSC40B-BP00,3-GS04	45
BES05UA	BES M08MM-NSC40B-BP00,3-GS04	45
BES05WE	BES G06EI-PSC40B-S49G	27
BES006A	BES M18MF-USC70B-S04K	147
BES006C	BES M18MG-GSC70B-BP00,3-GS04	147
BES007H	BES M18MI-NSC80B-BP03	67
BES007J	BES M18MI-NSC80B-BV03	67
BES007M	BES M18MI-NSC80B-S04K	73
BES0008	BES G06ED-NSC40F-BP02	25
BES008E	BES M18MI-PSC80B-BV02	67
BES008F	BES M18MI-PSC80B-BV03	67
BES008H	BES M18MI-PSC80B-BV05	69
BES008L	BES M18MI-PSC80B-S04G	73
BES008R	BES M30MF-GSC15B-BV02	149
BES008W	BES M30MF-GSC15B-S04K	151
BES008Z	BES M30MF-USC15B-BP03	151
BES009E	BES M30MI-NSC10B-BV03	79
BES012F	BES G04ED-PSC15B-S26G	15
BES012H	BES G04ED-PSC50F-EP02	15
BES012J	BES G04ED-PSC50F-EP05	15
BES012K	BES G04ED-PSC50F-S26G	17
BES012L	BES G08EE-PSC20B-BP02	27
BES012R	BES G08EG-PSC15B-BP05	27
BES012T	BES G08EG-PSC15B-BV05	27
BES012W	BES M05EC-NSC08B-S26G	17
BES012Z	BES M05EC-PSC08B-S26G	17
BES0013	BES M08EG-NSC40F-BV02	41
BES013A	BES M05ED-PSC15B-S26G	19
BES013C	BES M05ED-PSC50F-EP00,3-GS04	19
BES013E	BES M05ED-PSC50F-EP02	19
BES013F	BES M05ED-PSC50F-EP05	19
BES013H	BES M05ED-PSC50F-S26G	19
BES013J	BES M08EC-NSC15B-S49G	35
BES013K	BES M08EC-POC15B-S49G	35
BES013L	BES M08EC-POC20B-S49G	37
BES013Y	BES M08EE-NSC15B-S04G	35
BES0014	BES M08EG-POC40F-BP02	41
BES014A	BES M08EE-PSC20B-S49G	39
BES014M	BES M08EF-PSC40F-S49G	43
BES014W	BES M12EE-PSC40B-S04G	55
BES015N	BES 516-105-S4-C	71
BES0016	BES M08EG-PSC40F-BP02	41
BES016W	BES 516-123-G-S4-H	77
BES017H	BES 516-133-MO-C-PU-05	93
BES017M	BES 516-161-H3-L	707
BES0021	BES M08MG-GSC20B-BP03	139
BES022Z	BES 517-3036-I02-C-S4	103
BES0024	BES M08MH1-NSC15B-S04G	37
BES0025	BES M08MH1-NSC20B-S04G	39
BES025U	BES G06K40-PSC15B-FP02	19
BES0026	BES M08MH1-POC15B-S04G	37
BES026M	BES M08E60-PSC15B-EP02	27
BES0027	BES M08MH1-PSC15B-S04G	37
BES027K	BES M30MF-GSC15B-BX00,3-GS04-U	151
BES027M	BES 516-207-BO-E-03	47
BES027N	BES 516-207-BO-E-05	49
BES027T	BES 516-207-G-S21-E	57
BES027U	BES 516-207-S21-E	53
BES027W	BES 516-207-S27-E	53
BES0028	BES M08MH1-PSC20B-S04G	39
BES028L	BES 516-211-E4-E-03	65

BES028N	BES 516-211-E4-E-PU-05	65
BES028R	BES 516-211-E5-E-S27	71
BES028U	BES 516-211-E6-E-05	65
BES029L	BES 516-215-E4-E-03	79
BES029M	BES 516-215-E4-E-05	81
BES030E	BES Z03K-GSS10B-EP00,15-GS04-006	103
BES030F	BES Z03K-GSS10B-EP00,8-GS04-006	103
BES0031	BES M08MI-POC15B-BV03	29
BES0032	BES M08MI-POC15B-BV05	31
BES032M	BES 516-113-SA3-S4-C	51
BES032R	BES 516-133-SA3-C-PU-04	93
BES033H	BES 516-300-S255	101
BES033J	BES 516-300-S279	101
BES034K	BES 516-324-SA17-05	159
BES035E	BES 516-325-SA45	51
BES036R	BES 516-356-SA24-S4-C	61
BES036T	BES 516-356-SA26-S4-C	59
BES0037	BES M08MI-PSC15B-BV02	31
BES038Y	BES G06EI-PSC30B-S49G	23
BES040R	BES M04EC-PSC10B-EP00,3-GS49	17
BES0041	BES M12MF-USC30B-S04G	145
BES0042	BES M12MG-GSC30B-BP00,3-GS04	145
BES043T	BES 515-326-SA49-D-TF-02	225
BES043W	BES 515-327-SA22-D-TF-02	227
BES043Y	BES 515-362-SA4-D-TF-02	229
BES0046	BES M12MG-GSC30B-BV03	143
BES048A	BES R05KB-POC20B-S49A	97
BES048K	BES R01ZC-PSC50B-BZ00,2-GS04-W05	219
BES048N	BES R01ZC-PSC50B-BZ00,2-GS04-W13	219
BES048Y	BES R01ZC-PSC70B-BZ00,2-GS04-108	219
BES048Z	BES R01ZC-PSC70B-BZ00,2-GS04-110	101
BES050P	BES M05ED-GNX08B-EP02	255
BES051H	BES G06E60-POC15B-EP01-GS49	23
BES051J	BES M05ED-PSC10B-EP00,2-097	17
BES051L	BES M05ED-POC10B-EP00,3-097	17
BES052M	BES Q40KFA-PSY20B-DV02	105
BES054Z	BES M08EH1-PSC60F-S49G	45
BES056A	BES M12EI-PSC40B-S04G-S03	217
BES056C	BES M18EI-PSC72B-S04G-S03	217
BES0057	BES M12MI-NSC40B-BV03	49
BES0058	BES M12MI-NSC40B-BV05	49
BES058J	BES M08EH1-PSC60F-S04G	45
BES0059	BES M12MI-NSC40B-S04G	57
BES0060	BES M12MI-PSC20B-S04G	53
BES0062	BES M12MI-PSC40B-BP03	49
BES0064	BES M12MI-PSC40B-BV02	49
BES0065	BES M12MI-PSC40B-BV05	51
BES0069	BES M18MF-GSC70B-S04K	147
BES0070	BES M18MG-PSC16F-S04K	77
BES0071	BES M18MG-USC70B-BP03	147
BES0073	BES M18MG-USC70B-BV02	145
BES0074	BES M18MG-USC70B-BV03	147
BES0086	BES M18MI-PSC50B-S04G	69
BES0089	BES M18MI-PSC80B-BP03	67
BES0091	BES M30MF-USC15B-BV02	149
BES0092	BES M30MF-USC15B-BV03	149
BES0094	BES M30MF-USC15B-S04K	151
BES0120	BES G04EC-POC08B-S26G	15
BES0122	BES G04EC-PSC08B-S26G	15
BES03Z6	BES G03EC-PSC10B-EP02	15
BES03ZA	BES G06K40-PSC20B-FP02	21
BES04AH	BES R01EC-PSC50A-BP00,3-GS04-W50	193
BES004P	BES M12MG-USC30B-BP03	143
BES04RE	BES R01EC-PSC50A-BS00,3-GS04-W51	195
BES004T	BES M12MG-USC30B-BV02	143
BES004U	BES M12MG-USC30B-BV03	143
BES004W	BES M12MG-USC30B-BV05	143
BES05L2	BES M18MF2-PSC50B-BV02-EXD	241
BES05L6	BES M12MF2-PSC20B-BV02-EXE	237
BES05L7	BES M12MF2-PSC40F-BV02-EXE	239
BES05L8	BES M18MF2-PSC50B-BV02-EXE	241
BES05M3	BES M12EG2-PSC20B-BV02-EXF	237
BES05M4	BES M18EG2-PSC50B-BV02-EXF	241
BES05MW	BES M12MG2-GNX20B-S04G-EXC	239
BES05MY	BES M12MG2-GNX40F-S04G-EXC	241
BES05MZ	BES M18MH2-GNX50B-S04G-EXC	241
BES05NH	BES M18MH2-GNX50B-BT02-EXA	241
BES05NP	BES M18MH2-GNX50B-BT02-EXB	241
BES013M	BES M08EC-PSC15B-S04G	35
BES013N	BES M08EC-PSC15B-S49G	35
BES013P	BES M08EC-PSC20B-S49G	37
BES014K	BES M08EF-PSC15B-BP02	29
BES020A	BES 517-132-M6-H-S4	107
BES020C	BES 517-132-M7-H	109
BES020E	BES 517-132-M7-H-S4	111
BES021E	BES Q40KFU-PAC30F-S04G	111
BES021H	BES Q40KFU-PAC35E-S04G	197
BES021K	BES Q40KFU-PAC35E-S04G-W01	197
BES021M	BES Q40KFU-PAC40E-S04G	197
BES021P	BES Q40KFU-PSC15A-S04G	195
BES021T	BES Q40KFU-PSC15A-S04G-W01	195
BES021U	BES Q40KFU-PSC20A-S04G	195
BES021W	BES Q40KFU-PSC20B-S04G	107
BES021Z	BES Q40KFU-PSC30F-S04G	111
BES0022	BES M08ME1-GSC20B-S04G	141
BES022K	BES Q40KFU-PAC15A-S04G	195
BES022R	BES 517-460-U5-L-D	113
BES023P	BES 517-139-M4-H	113
BES023R	BES 517-139-M5-H	113
BES023W	BES 517-139-U5-H-S4	113
BES023Y	BES 517-223-M5-E	109
BES024F	BES 517-224-M5-E	113
BES025H	BES G06EA-POC15B-EP02	21
BES025L	BES G06EA-PSC15B-EP01	21
BES025M	BES G06EA-PSC15B-EP02	21
BES025N	BES G06EA-PSD15B-S49G	23
BES028A	BES 516-209-S21-E	59
BES028F	BES 516-210-BO-E-03	59
BES029W	BES 516-215-E5-E-S5	85
BES030C	BES Q80KA-PAC50B-S04Q-U	111
BES0033	BES M08MI-POC20B-S49G	39
BES0034	BES M08MI-PSC15B-BP02	29
BES0036	BES M08MI-PSC15B-BP05	29
BES039W	BES M12MG-GSC30B-BX00,3-GS04-U	145
BES042L	BES 516-300-S338-S4-D	167
BES042M	BES 516-300-S337-S4-D	167
BES048J	BES R01ZC-PSC50B-BZ00,2-GS04-V02	213
BES048W	BES R01ZC-PSC50B-BZ00,5-GS04-V02	213
BES049Y	BES R01EC-PSC50A-BP00,3-GS04-W51	195
BES050N	BES G04ED-GNX08B-EP02	255
BES054N	BES M08MI-PSC30B-S49G	41
BES055Y	BES M05EE1-PSC08B-EV00,9-116	157
BES0068	BES M12MI-PSC40B-S04G	57
BES0083	BES M18MI-PSC50B-BV03	65
BES0130	BES M05ED-NOC15B-S26G	19
BES0137	BES M05ED-POC15B-S26G	19
BES0139	BES M05ED-POC50F-S26G	19
BES0142	BES M08EE-POC15B-S04G	35
BES0143	BES M08EE-POC15B-S49G	35
BES0145	BES M08EE-POC20B-S49G	39
BES0146	BES M08EE-PSC15B-S04G	35
BES0147	BES M08EE-PSC15B-S49G	35
BES0149	BES M08EE-PSC20B-S04G-101	39
BES0153	BES 516-133-MO-C-S4-00,2	93
BES0161	BES 516-113-S4-C	55
BES0166	BES 516-114-G-S4-H	87

BES0167	BES 516-114-S4-C	85
BES0178	BES 516-131-S4-C	61
BES0201	BES 517-132-M3-H	105
BES0206	BES 517-132-M5-H	109
BES0209	BES 517-132-M6-H	107
BES0217	BES Q40KFU-PAC20B-S04G	107
BES0222	BES Q40KFU-PSC35Z-S04G-011	197
BES0223	BES Q40KFU-PSC40E-S04G	197
BES0236	BES 517-385-V-C-S4	109
BES0244	BES 517-223-U4-E	109
BES0247	BES 517-223-U5-E	109
BES0251	BES G06E60-POC15B-EP02	21
BES0254	BES G06E60-PSC15B-EP00,3-GS49	21
BES0256	BES G06E60-PSC15B-EP02	21
BES0257	BES G06E60-PSC20B-EP00,3-GS49	23
BES0258	BES G06E60-PSC20B-EP02	21
BES0270	BES M08EA-POD15B-S49G	33
BES0275	BES M08EA-PSC15B-EP02	29
BES0276	BES M08EA-PSC20B-EP00,3-GS49	33
BES0277	BES M08EA-PSD15B-S49G	33
BES0278	BES M08EA-PSD20B-S49G	37
BES0285	BES 516-209-BO-E-03	59
BES0286	BES 516-209-BO-E-05	59
BES0289	BES 516-209-G-S21-E	63
BES0292	BES 516-213-E4-E-03	75
BES0296	BES 516-213-E5-E-S21	75
BES0297	BES 516-213-E5-E-S27	75
BES0298	BES 516-213-E5-E-S5	75
BES0300	BES Q40KFU-GNX35F-S92G-EEX	247
BES0308	BES Q40KFU-PSC40F-S04G-012	111
BES0314	BES R01ZC-PAC70B-BP00.2-GS04-107	103
BES0315	BES M05EG-NSC08B-BP00,2-GS49	159
BES0316	BES 516-418-E5-L-S27	83
BES0324	BES M08MG-GSC20B-BP00,3-GS04-101	141
BES0326	BES M12MG-GSC30B-BP00,3-GS04-101	145
BES0328	BES M18MF-GSC70B-S04G	149
BES0330	BES 516-209-SA1-S21-E	59
BES0341	BES 516-3009-SA2-MO-C-05	91
BES0389	BES M08EE-PSC20B-EP05-511	31
BES0409	BES G03EC-PSC10B-EP00,3-GS49	15
BES0427	BES M08EE-PSC25B-S49G	41
BES0428	BES Z06K-PSC16F-S49G	259
BES0429	BES Z06K-PSC16F-BP00,1-GS04	259
BES0433	BES M12EE-PSC40B-S04G-L01	185
BES0435	BES M12EI-PSC40B-S04G-L01	185
BES0437	BES M18EI-PSC80B-S04G-L01	185
BES0441	BES M18EE1-PSY50B-S04G-L01	185
BES0443	BES M12EE1-PSY40F-S04G-L01	185
BES0444	BES M12EE1-PSY20B-S04G-L01	185
BES0454	BES M30MI-PSC15A-S04G-W12	193
BES0457	BES Q40KFU-PAC20A-S04G-W01	197
BES0474	BES M12MG-GOC30B-BV03	143
BES0481	BES R01ZC-PSC50B-BZ03-V02	213
BES0493	BES R01ZC-PSC50B-BZ00,2-GS49-V02	213
BES0496	BES M18MI2-PSC80B-S04G	73
BES0510	BES M12EI-PSC40S-S04G-S	205
BES0511	BES M12EI-PSC40N-S04G-S	205
BES0550	BES M08EH1-POC60F-S49G	45
BES0555	BES Q40KFC-PSY20B-DV02	105
BES0567	BES M12EI-PSC40A-S04G-S02	205
BES0568	BES Q08ZC-GNX15B-EP02	255
BFB000A	BFB M18M-002-P-S4	521
BFB000C	BFB M18M-011-P-S4	519
BFB000E	BFB M18M-012-P-S4	519
BFB0003	BFB 75K-001-P-02	519
BFB0004	BFB 75K-001-P-S75	519
BFB0006	BFB 75K-002-P-S75	519
BFB0008	BFB 75K-003-P-02	519
BFB0009	BFB M18M-001-P-S4	521
BFO000AP	BFO D22-LA-GD-EAK-52-02	543
BFO000AR	BFO D13-XV-AK-EAK-50-02	551
BFO000AT	BFO D13-XB-AB-EAK-10-01	551
BFO000AW	BFO D22-LAH-BK-EAK-10-02	541
BFO000AY	BFO D22-LAT-YB-EAK-10-0,5	541
BFO0000C	BFO N22-LA-FB-EAK-05-01	539
BFO000C3	BFO D10-XA-VB-EAK-10-02	545
BFO000C4	BFO D22-XB-LB-EAK-15-SA1-02	547
BFO000C5	BFO D25-LA-ED-EAK-250-0,5	543
BFO000C6	BFO D10-LAH-CK-EAK-05-02	543
BFO000C7	BFO D10-LAH-DK-EAK-05-02	543
BFO000C8	BFO D25 LA-HD-EAK-465-02	543
BFO000C9	BFO D22-XB-UB-EAK-15-SA1-02	547
BFO0000F	BFO 18A-LAA-MZG-20-0,5	525
BFO000FN	BFO D22-XB-LB-EAK-15-SA1-05	549
BFO000FP	BFO D22-XB-LB-EAK-15-SA1-01	547
BFO0000H	BFO 18A-LAA-MZG-20-1	525
BFO000H3	BFO 18A-XAA-MZG-30-5	533
BFO000H4	BFO D22-XB-LB-EAK-15-SA1-0,5	547
BFO000H5	BFO D22-XA-08B-EAK-26-02	549
BFO000H6	BFO D22-LAH-JD-EAK-10-02	541
BFO000H8	BFO NU1-XB-05K-MZG-11-01	533
BFO0000J	BFO 18A-LAA-MZG-20-1,5	525
BFO0000M	BFO 18A-LAA-UZG-20-0,5	525
BFO0000N	BFO 18A-LAA-UZG-20-1	525
BFO0000U	BFO 18A-LCC-SMG-20-0,5	527
BFO0000W	BFO 18A-LCC-SMG-20-1	527
BFO0000Z	BFO 18A-LCC-UZG-20-1	527
BFO0001A	BFO 18A-LEE-SMG-20-1	529
BFO0001F	BFO 18A-LEE-UZG-20-0,5	529
BFO0001H	BFO 18A-LEE-UZG-20-1	531
BFO0001P	BFO 18A-LFF-MZG-10-0,5	527
BFO0001R	BFO 18A-LFF-MZG-10-1	529
BFO0001U	BFO 18A-LFF-SMG-10-0,5	529
BFO0001W	BFO 18A-LFF-SMG-10-1	529
BFO0001Z	BFO 18A-LGG-MZG-10-0,5	525
BFO0002F	BFO 18A-XAA-SMG-30-0,5	533
BFO0002H	BFO 18A-XAA-SMG-30-1	533
BFO0002M	BFO 18A-XAA-UZG-30-0,5	533
BFO0002N	BFO 18A-XAA-UZG-30-1	533
BFO0002U	BFO 18A-XAC-SMG-30-0,5	535
BFO0002W	BFO 18A-XAC-SMG-30-1	535
BFO00003	BFO D22-XA-DB-EAK-20-01	549
BFO0003C	BFO 18A-XAE-UZG-30-0,5	537
BFO0003E	BFO 18A-XAE-UZG-30-1	537
BFO0003H	BFO 18A-XAF-MZG-15-0,5	535
BFO0003J	BFO 18A-XAF-MZG-15-1	535
BFO0003M	BFO 18A-XAF-SMG-15-0,5	535
BFO0003N	BFO 18A-XAF-SMG-15-1	537
BFO0003R	BFO 18A-XAG-MZG-15-0,5	533
BFO0003T	BFO 18A-XAG-MZG-15-1	533
BFO0003Y	BFO 18V-LCC-MZG-23-0,5	527
BFO0003Z	BFO 18V-LCC-MZG-23-0,75	527
BFO00004	BFO D22-XA-SB-EAK-20-02	549
BFO0004A	BFO 18V-LDD-MZG-23-3	531
BFO0004C	BFO 18V-LDD-SMG-23-0,5	531
BFO0004F	BFO 18V-LDD-SMG-23-1	531
BFO0004M	BFO 18V-XAC-MZG-30-0,5	535
BFO0004P	BFO 18V-XAC-SMG-30-0,5	535
BFO0004R	BFO 18V-XAC-SMG-30-1	535
BFO0004U	BFO 18V-XAD-MZG-30-0,5	537
BFO0004Y	BFO 18V-XAD-SMG-30-0,5	539
BFO0004Z	BFO 18V-XAD-SMG-30-1	539
BFO00005	BFO D22-XA-UB-EAK-20-02	547
BFO0005A	BFO D13-XA-JB-EAK-20-02	551
BFO0005C	BFO D13-XB-KB-EAK-10-02	545
BFO0005E	BFO D13-XB-RB-EAK-10-02	545

BFO005K	BFO D22-LA-BD-EAK-52-02	543
BFO005M	BFO D22-LA-KB-EAK-10-02	539
BFO005N	BFO D22-LA-NB-EAK-10-02	541
BFO005P	BFO D22-LA-QB-PAK-05-02	541
BFO005R	BFO D22-LA-RB-EAK-10-02	539
BFO005T	BFO D22-LAH-KB-EAK-10-02	539
BFO005U	BFO D22-LAP-KB-EAK-15-02	539
BFO005W	BFO D22-LAT-KB-EAK-10-02	541
BFO005Y	BFO D22-LD-EAK-10-20	539
BFO005Z	BFO D22-XA-CD-EAK-110-02	551
BFO0006	BFO D22-XB-UB-EAK-15-02	545
BFO0007	BFO D22-XBF-LB-EAK-15-02	549
BFO0013	BFO 18A-LEE-MZG-20-0,5	529
BFO0014	BFO 18A-LEE-MZG-20-1	529
BFO0019	BFO 18A-LEE-SMG-20-0,5	529
BFO0020	BFO 18A-LGG-MZG-10-1	525
BFO0023	BFO 18A-LGG-SMG-10-0,5	525
BFO0024	BFO 18A-LGG-SMG-10-1	527
BFO0026	BFO 18A-XAA-MZG-30-0,5	531
BFO0027	BFO 18A-XAA-MZG-30-1	531
BFO0031	BFO 18A-XAE-MZG-30-0,5	537
BFO0032	BFO 18A-XAE-MZG-30-1	537
BFO0037	BFO 18A-XAE-SMG-30-0,5	537
BFO0038	BFO 18A-XAE-SMG-30-1	537
BFO0042	BFO 18V-LCC-SMG-23-0,5	527
BFO0047	BFO 18V-LDD-MZG-23-0,75	531
BFO0049	BFO 18V-LDD-MZG-23-2,0	531
BFO0051	BFO D10-LA-CB-EAK-05-02	541
BFO0052	BFO D10-XA-GB-EAK-10-02	545
BFO0053	BFO D10-XA-HB-EAK-10-02	547
BFO0054	BFO D10-XA-RB-EAK-10-02	545
BFO0055	BFO D10-XAH-KB-EAK-10-02	547
BFO0056	BFO D13-LA-QB-EAK-05-02	541
BFO0058	BFO D13-LG-05-EAK-30-02	545
BFO0059	BFO D13-LG-10-EAK-30-02	545
BFO0060	BFO D22-XA-ED-EAK-250-02	551
BFO0062	BFO D22-XA-MB-PAK-10-02	551
BFO0063	BFO D22-XAH-LB-EAK-20-02	549
BFO0064	BFO D22-XAP-LB-EAK-30-02	549
BFO0065	BFO D22-XAT-LB-EAK-20-02	549
BFO0066	BFO D22-XB-LB-EAK-15-02	547
BFO0067	BFO D25-LA-CD-EAK-110-02	543
BFO0068	BFO D25-LA-ED-EAK-250-02	543
BFS000L	BFS 33M-GSS-F01-PU-02	507
BFS000M	BFS 33M-GSI-F01-S75	507
BFS0001	BFS 26K-PS-L01-S115	507
BGL000C	BGL 120A-005-S49	455
BGL000F	BGL 120A-007-S49	453
BGL000J	BGL 180A-001-S49	459
BGL000L	BGL 180A-005-S49	457
BGL000N	BGL 180A-007-S49	453
BGL000R	BGL 20A-001-S49	457
BGL000U	BGL 20A-005-S49	455
BGL000Y	BGL 20A-007-S49	451
BGL0001	BGL 10A-001-S49	457
BGL001C	BGL 30A-005-S49	455
BGL001F	BGL 30A-007-S49	451
BGL001J	BGL 50A-001-S49	457
BGL001M	BGL 50A-003-S49	453
BGL001P	BGL 50A-005-S49	455
BGL001T	BGL 50A-007-S49	451
BGL001W	BGL 5A-001-S49	457
BGL001Z	BGL 5A-005-S49	455
BGL002L	BGL 21-IR	451
BGL002M	BGL 21-RG	451
BGL002Z	BGL 30C-001-S4	461
BGL0003	BGL 10A-005-S49	455
BGL003C	BGL 50C-005-S4	461
BGL003F	BGL 50C-007-S4	459
BGL003J	BGL 30A-011-S49	451
BGL003L	BGL 80A-011-S49	453
BGL004L	BGL 50F-001-00,2-S4	461
BGL004M	BGL 50F-007-00,2-S4	461
BGL004N	BGL 80F-001-00,2-S4	461
BGL004P	BGL 80F-007-00,2-S4	461
BGL0005	BGL 10A-007-S49	451
BGL0007	BGL 120A-001-S49	459
BGL0009	BGL 120A-003-S49	455
BGL0010	BGL 220A-001-S49	459
BGL0012	BGL 220A-005-S49	457
BGL0014	BGL 220A-007-S49	453
BGL0016	BGL 30A-001-S49	457
BGL0019	BGL 30A-003-S49	453
BGL0021	BGL 5A-007-S49	451
BGL0023	BGL 80A-001-S49	457
BGL0025	BGL 80A-003-S49	453
BGL0027	BGL 80A-005-S49	455
BGL0029	BGL 80A-007-S49	453
BGL0031	BGL 30C-003-S4	459
BGL0033	BGL 30C-005-S4	459
BGL0035	BGL 30C-007-S4	459
BGL0037	BGL 50C-001-S4	461
BGL0039	BGL 50C-003-S4	459
BHS000T	BES 516-200-S2/2.062“-S21	165
BHS000U	BES 516-200-S2/2.062“-S5	165
BHS0001	BES 516-100-S45-S4-D	173
BHS001F	BES 516-300-S135-D-PU-05	169
BHS001L	BES 516-300-S135-S4-D	171
BHS001N	BES 516-300-S144-S4-D	175
BHS002H	BES 516-300-S240-D-PU-03	169
BHS002J	BES 516-300-S240-D-PU-05	169
BHS002W	BES 516-300-S249-NEX-S4-D	237
BHS002Y	BES 516-300-S249-S4-D	169
BHS003A	BES 516-300-S291-S4-D	163
BHS003M	BES 516-300-S295/1.250“-S4	165
BHS004A	BES 516-300-S299-S4-D	175
BHS004C	BES 516-300-S300-S4-D	173
BHS004K	BES 516-300-S315-S4-N	239
BHS004L	BES 516-300-S318-S4-N	237
BHS004N	BES 516-300-S321-S4-D	169
BHS005H	BHS G408N-PSC10-S49	157
BHS005P	BHS B135V-PSD15-NEX-S04	239
BHS005R	BHS B135V-PSD15-S04	171
BHS005U	BHS B135V-PSD25-S04-003	173
BHS005Y	BHS B249V-PSD15-S04	171
BHS0006	BES 516-200-S2/1.025“-S5	163
BHS006M	BES 516-300-S331-S4-D	177
BHS006N	BHS G403N-PSD10-S26	157
BHS006U	BHS G409N-PSD10-EP02	157
BHS006Y	BHS G409N-NSD10-EP02	157
BHS007J	BHS G409N-PSD10-EP00,3-GS49	157
BHS0008	BES 516-200-S2/1.250“-S21	163
BHS0009	BES 516-200-S2/1.250“-S5	165
BHS0014	BES 516-200-S2/2.875“-S5	165
BHS0019	BES 516-200-S2/4.560“-S5	167
BHS0021	BES 516-300-S162-S4-D	171
BHS0022	BES 516-300-S163-S4-D	173
BHS0026	BES 516-300-S190-S4	175
BHS0027	BES 516-300-S203	175
BHS0028	BES 516-300-S205-D-PU-03	167
BHS0029	BES 516-300-S205-D-PU-05	167
BHS0030	BES 516-300-S260-S4-D	167
BHS0032	BES 516-300-S262-S4-D	169
BHS0033	BES 516-300-S265-S4-D	171
BHS0034	BES 516-300-S266-S4	239
BHS0039	BES 516-300-S289-BO-D-PU-05	161

BHS0041	BES 516-300-S295/2.062“-S4	165
BHS0050	BHS A402N-PSC15-S49	161
BHS0054	BHS A404N-PSC15-S49	161
BHS0058	BHS A407N-PSD15-BP02	161
BHS0061	BHS B265V-PSD15-S04	171
BIP000C	BIP ED2-B070-03-S75	279
BIP000E	BIP ED2-B103-03-S75	279
BIP000L	BIP AD2-T030-02-S4	277
BIP000M	BIP ED2-B048-03-S75	277
BIP000R	BIP ED2-B133-03-S75	279
BIP001F	BIP LD2-T133-03-S75	279
BIP001H	BIP LD2-T070-03-S75	279
BIP001J	BIP LD2-T048-03-S75	277
BIP001K	BIP AD2-T017-04-BP02	275
BIP001L	BIP CD2-T017-04-BP02	275
BIP001M	BIP LD2-T017-04-BP00,5-S4	275
BIP001U	BIP AD2-T017-01-EB02	275
BIP001W	BIP CD2-T017-01-EB02	275
BIP001Y	BIP LD2-T017-01-EP00,5-S4	275
BIP0002	BIP AD2-B040-02-S4	277
BIP0004	BIP LD2-T040-02-S4	277
BIP0005	BIP CD2-B040-02-S4	277
BIP0014	BIP LD2-T103-03-S75	279
BIW1-A310	BIW1-**A**310-M_ _ _ _-P1-S115	283
BIW1-C310	BIW1-**C**310-M_ _ _ _-P1-S115	283
BIW1-E310	BIW1-**E**310-M_ _ _ _-P1-S115	283
BIW1-G310	BIW1-**G**310-M_ _ _ _-P1-S115	283
BKT000H	BKT 18KF-001-P-S4	511
BKT000Y	BKT 21M-002-P-S4	511
BKT0001	BKT 67M-001-U-S92	511
BKT0003	BKT 67M-003-U-S92	511
BKT0005	BKT 67M-005-U-S92	511
BKT0006	BKT 67M-006-U-S92	511
BKT0010	BKT 6K-002-P-S75	511
BLA0001	BLA 50A-001-S115	503
BLA0003	BLA 50A-002-S4	503
BLG0001	BLG 1-010-210-050-PV01-SX	499
BLG0002	BLG 1-010-210-070-PV01-SX	499
BLG0003	BLG 1-015-210-050-PV01-SX	499
BLG0005	BLG 1-030-210-070-PV01-SX	499
BLT0009	BLT 21M-001-P-S4	517
BMF00AR	BMF 235K-PS-C-2A-PU-02	647
BMF00C4	BMF 235K-PS-C-2A-SA2-S49-00,3	647
BMF00C5	BMF 235K-PS-C-2A-SA2-S4-00,3	647
BMF00C6	BMF 235K-PO-C-2A-SA2-S49-00,3	645
BMF00C9	BMF 235K-PS-C-2A-SA95-S4-00,3	669
BMF00C9	BMF 235K-PS-C-2A-SA95-S4-00,3	647
BMF00CA	BMF 235K-PS-C-2A-SA95-S75-00,3	647
BMF00CA	BMF 235K-PS-C-2A-SA95-S75-00,3	669
BMF00E4	BMF 255K-N-06-EEX	647
BMF00EF	BMF 243K-PS-C-2A-PU-02	653
BMF00EL	BMF 243K-PS-C-2A-SA2-S49-00,3	653
BMF00ER	BMF 243K-PS-C-2A-SA2-S4-00,3	653
BMF00ET	BMF 243K-PS-C-2A-SA95-S75-00,3	669
BMF00ET	BMF 243K-PS-C-2A-SA95-S75-00,3	653
BMF00F9	BMF 243K-PS-C-2A-SA95-S4-00,3	667
BMF00F9	BMF 243K-PS-C-2A-SA95-S4-00,3	653
BMF00HA	BMF 233K-PS-C-2A-PU-02	651
BMF00HF	BMF 233K-PS-C-2A-SA2-S49-00,3	651
BMF00J1	BMF 233K-PS-C-2A-SA95-S75-00,3	667
BMF00J1	BMF 233K-PS-C-2A-SA95-S75-00,3	651
BMF00J2	BMF 233K-PS-C-2A-SA95-S4-00,3	667
BMF00J2	BMF 233K-PS-C-2A-SA95-S4-00,3	651
BMF00JF	BMF 203K-H-PS-C-A2-PU-02	651
BMF00JH	BMF 203K-H-PS-C-A2-S75-00,3	651
BMF000L	BMF 07M-PS-D-2-SA2-S49-00,3	677
BMF00L6	BMF 235K-H-PS-C-A2-S75-00,3	645
BMF00LW	BMF 405KF-PO-C-2A-EY-02	647
BMF00M5	BMF 405KF-PS-C-2A-S4-00,3	647
BMF00MU	BMF 415KW-HAKKI-W-5-P3-S75-00,3	645
BMF00MW	BMF 415KW-HAPS-W-5-P3-S49-00,3	645
BMF00N2	BMF 415KW-HAKKI-W-5-S0-02	645
BMF00N3	BMF 415KW-HAPS-W-5-S0-02	645
BMF00NL	BMF 415KW-HAKKI-W-5-P0-S4-00,3	645
BMF00NM	BMF 415KW-HAPS-W-5-P0-S4-00,3	645
BMF000P	BMF 08M-PS-C-2-KPU-02	677
BMF001E	BMF 103K-PS-C-2A-PU-02	657
BMF001L	BMF 103K-PS-C-2A-SA2-S49-00,3	657
BMF001P	BMF 103K-PS-C-2A-SA7-S49-00,3	657
BMF001R	BMF 103K-PS-C-2A-SA95-S75-00,3	667
BMF001R	BMF 103K-PS-C-2A-SA95-S75-00,3	657
BMF003U	BMF 303K-PS-C-2A-PU-02	659
BMF004C	BMF 303K-PS-C-2A-SA7-S49-00,3	657
BMF004E	BMF 303K-PS-C-2A-SA95-S4-00,3	657
BMF004E	BMF 303K-PS-C-2A-SA95-S4-00,3	667
BMF004F	BMF 303K-PS-C-2A-SA95-S75-00,3	657
BMF004F	BMF 303K-PS-C-2A-SA95-S75-00,3	667
BMF005L	BMF 305K-PS-C-2-SA2-S49-00,3	659
BMF008A	BMF 32M-PS-W-2-S4	659
BMF008F	BMF 305M-PS-C-2-S49	659
BMF0027	BMF 21K-PS-C-2-PU-03	663
BMF0029	BMF 21K-PS-C-2-S49	663
BMF0043	BMF 303K-PS-C-2A-SA2-S49-00,3	657
BMF0056	BMF 305K-PS-C-2-PU-02	659
BMF0087	BMF 32M-PS-C-2-S4	659
BMF0088	BMF 32M-PS-C-2-S49	659
BMP000K	BMP 01-EL1PP21A-0256-00-P00,5-S75	641
BMP000N	BMP 01-EL1PP21A-0096-00-P00,5-S4	641
BMP0007	BMP 01-EL1PP21A-0032-00-P00,5-S75	641
BMP0009	BMP 01-EL1PP21A-0160-00-P02	641
BOD000C	BOD 26K-LBR04-S115-C	627
BOD000E	BOD 26K-LBR05-S115-C	627
BOD000L	BOD 21M-LA01-S92	623
BOD000M	BOD 21M-LA02-S92	623
BOD000N	BOD 21M-LA04-S92	623
BOD000P	BOD 21M-LB01-S92	623
BOD000R	BOD 21M-LB02-S92	625
BOD000T	BOD 21M-LB04-S92	625
BOD001C	BOD 66M-RB11-S92	629
BOD001E	BOD 66M-LA14-S92	629
BOD001F	BOD 66M-LB14-S92	629
BOD001H	BOD 66M-RA11-S92	629
BOD001J	BOD 66M-LA12-S92	629
BOD001K	BOD 66M-LB12-S92	629
BOD001L	BOD 6K-RA02-S75	623
BOD001N	BOD 23K-LA01-S92	625
BOD001P	BOD 23K-LB01-S92	625
BOD001R	BOD 6K-RA03-S75	623
BOD001U	BOD 37M-LA01-S92	629
BOD001W	BOD 37M-LB01-S92	629
BOD001Y	BOD 37M-LPR02-S115	627
BOD001Z	BOD 6K-RA04-S75	623
BOD0002	BOD 26K-LA01-S4-C	625
BOD002L	BOD 21M-LBI05-S4	623
BOD002M	BOD 24K-LPI07-S4	625
BOD002N	BOD 24K-LPI08-S4	625
BOD0004	BOD 26K-LA02-S4-C	627
BOD0005	BOD 26K-LB04-S115-C	627
BOD0006	BOD 26K-LB05-S115-C	627
BOD0007	BOD 26K-LB06-S92-C	627
BOD0008	BOD 26K-LB07-S92-C	627
BOD0020	BOD 23K-LI01-S4	625
BOH000A	BOH TR-G02-001-01-S49F	595
BOH000C	BOH TK-G02-001-01-S49F	595
BOH000E	BOH TK-M03-005-01-S49F	595
BOH00E5	BOH TR-M04-020-01-S49F	597

BOH00E6	BOH TK-M04-020-01-S49F	597
BOH00EL	BOH AI-R034-025-01-S49F	599
BOH000F	BOH TK-M05-006-01-S49F	597
BOH00F5	BOH AI-R028-034-01-S49F	593
BOH00F6	BOH AI-R051-035-01-S49F	593
BOH00F7	BOH AI-R073-036-01-S49F	593
BOH00FF	BOH AI-R180-037-02-S49F	593
BOH00FH	BOH AI-R264-038-02-S49F	593
BOH00FJ	BOH AI-R396-039-02-S49F	593
BOH00FK	BOH AI-R484-040-02-S49F	593
BOH00FL	BOH AI-R704-041-02-S49F	593
BOH000H	BOH TL-M06-007-02-S49F	599
BOH000J	BOH TJ-G02-001-01-S49F	595
BOH000K	BOH TR-M06-002-02-S49F	599
BOH000L	BOH DR-Q06-001-01-S49F	605
BOH000M	BOH DK-Q06-001-01-S49F	605
BOH000N	BOH TR-Q06-001-01-S49F	599
BOH000P	BOH TK-Q06-001-01-S49F	599
BOH000R	BOH TJ-Q06-001-01-S49F	599
BOH000T	BOH TR-M03-001-01-S49F	595
BOH000U	BOH TK-M03-001-01-S49F	595
BOH000Y	BOH TR-M05-003-01-S49F	597
BOH001A	BOH TR-T64-001-01-S49F	609
BOH001M	BOH AR-F40-001-01-S49F	607
BOH001N	BOH AR-F40-002-01-S49F	607
BOH001P	BOH AR-F80-003-01-S49F	607
BOH001R	BOH TR-T16-001-01-S49F	607
BOH001U	BOH TJ-T32-001-01-S49F	609
BOH001Y	BOH TR-T32-001-01-S49F	609
BOH001Z	BOH TK-R003-007-01-S49F	601
BOH0002	BOH DI-G02-001-01-S49F	603
BOH002A	BOH DK-R027-004-01-S49F	607
BOH002C	BOH TK-R018-001-01-S49F	601
BOH002E	BOH TK-R018-002-01-S49F	601
BOH002F	BOH TK-R027-003-01-S49F	601
BOH002H	BOH TK-R027-004-01-S49F	601
BOH002K	BOH DK-R002-006-01-S49F	605
BOH002L	BOH FK-Z001-001-01-S49F	607
BOH002M	BOH AI-R165-011-01-S49F	603
BOH0003	BOH DR-G02-001-01-S49F	603
BOH003C	BOH DI-G05-002-01-S49F	603
BOH003M	BOH DI-M06-002-01-S49F	605
BOH003W	BOH DI-Q06-001-01-S49F	605
BOH0004	BOH DI-M03-001-01-S49F	603
BOH0005	BOH DR-G05-002-01-S49F	603
BOH005J	BOH TI-G02-001-01-S49F	595
BOH0006	BOH DK-G05-002-01-S49F	603
BOH006H	BOH TI-M06-002-01-S49F	597
BOH006P	BOH TI-Q06-001-01-S49F	599
BOH0007	BOH DR-M06-002-01-S49F	605
BOH007A	BOH TJ-R010-008-01-S49F	601
BOH0008	BOH DK-M06-002-01-S49F	605
BOH0009	BOH DR-M03-001-01-S49F	603
BOH0010	BOH TR-G05-005-02-S49F	597
BOH0012	BOH TK-M08-004-02-S49F	599
BOH0013	BOH TK-M05-003-01-S49F	597
BOH0015	BOH TJ-T48-001-01-S49F	609
BOH0016	BOH TJ-T64-001-01-S49F	609
BOH0019	BOH TR-T48-001-01-S49F	609
BOH0020	BOH TR-R010-008-02-S49F	601
BOH0024	BOH AR-R113-010-01-S49F	601
BOH0027	BOH DK-R018-001-01-S49F	607
BOH0028	BOH DK-R018-002-01-S49F	605
BOH0029	BOH DK-R027-003-01-S49F	607
BOH0061	BOH TI-M03-001-01-S49F	595
BOH0065	BOH TI-M05-003-01-S49F	597
BOS00CH	BLE 18KF-PA-1LT-S4-C	429
BOS00CK	BLE 18KF-PA-1PP-S4-C	429
BOS00CT	BLE 18KW-PA-1LT-S4-C	429
BOS00CW	BLE 18KW-PA-1PP-S4-C	429
BOS00EM	BLS 18KF-XX-1LT-S4-L	429
BOS00EP	BLS 18KF-XX-1P-S4-L	429
BOS00ET	BLS 18KW-XX-1LT-S4-L	429
BOS00EW	BLS 18KW-XX-1P-S4-L	429
BOS00JJ	BOS 18KF-PA-1FR-S4-C	521
BOS00JM	BOS 18KF-PA-1HA-S4-C	379
BOS00JP	BOS 18KF-PA-1LOC-S4-C	353
BOS00JT	BOS 18KF-PA-1LQP-S4-C	401
BOS00JW	BOS 18KF-PA-1N1R-S4-C	379
BOS00JZ	BOS 18KF-PA-1PD-S4-C	353
BOS00K0	BOS 18KF-PA-1PE-C-02	351
BOS00K1	BOS 18KF-PA-1PE-S4-C	353
BOS00K3	BOS 18KF-PA-1QD-S4-C	401
BOS00K5	BOS 18KF-PA-1RE-S4-C	401
BOS00K7	BOS 18KF-PA-1TB-S4-C	401
BOS00K9	BOS 18KF-PA-1XA-S4-C	351
BOS00LH	BOS 18KW-PA-1HA-S4-C	379
BOS00LM	BOS 18KW-PA-1LQH-S4-C	401
BOS00LT	BOS 18KW-PA-1PD-S4-C	351
BOS00LW	BOS 18KW-PA-1QC-S4-C	401
BOS00LZ	BOS 18KW-PA-1TB-S4-C	401
BOS00TL	BOS 21M-PA-LR10-S4	407
BOS00TN	BOS 21M-PA-PK10-S4	407
BOS00TR	BOS 21M-PA-PR10-S4	407
BOS00TU	BOS 21M-PA-PT10-S4	407
BOS00WF	BOS 12M-PA-LE10-S4	423
BOS00WH	BOS 12M-X-LS11-S4	423
BOS00WJ	BOS 12M-X-LS12-S4	423
BOS00WL	BOS 12M-XT-LS11-S4	425
BOS00WN	BOS 12M-XT-LS12-S4	425
BOS00WT	BOS 21M-PA-IE10-S4	435
BOS00WW	BOS 21M-PA-LE10-S4	435
BOS00WZ	BOS 21M-XT-IS11-S4	435
BOS00Y0	BOS 21M-XT-LS11-S4	435
BOS01C1	BOS 18M-PS-RD20-S4	349
BOS01C5	BOS 18M-PA-LH23-S4	377
BOS01CA	BOS 18M-PA-RD21-S4	349
BOS01CE	BOS 18M-PA-PR20-S4	397
BOS01CF	BOS 18M-PA-RD20-S4	349
BOS01CJ	BOS 50K-PA-RD10-S4	361
BOS01CK	BOS 50K-PA-RE10-S4	437
BOS01CN	BOS 50K-XT-RS10-S4	439
BOS01CR	BOS 50K-PA-PR10-S4	409
BOS01CY	BOS 18M-X-RS30-S4	425
BOS01E7	BOS 18M-PS-RD21-S4	349
BOS01EY	BOS 18M-PA-ID20-S4	349
BOS01F0	BOS 18M-PA-IR20-S4	397
BOS01F8	BOS 18M-PS-PR23-S4	399
BOS01FA	BOS 18M-PS-RD23-S4	349
BOS01FJ	BOS 18M-PA-PR20-S4S	399
BOS01FL	BOS 23K-PA-RH10-S4	385
BOS01FM	BOS 23K-PA-RD10-S4	359
BOS01FN	BOS 23K-PA-RR10-S4	409
BOS01FP	BOS 23K-PA-RE10-S4	437
BOS01FR	BOS 23K-PA-LH10-S4	385
BOS01FU	BOS 23K-PA-LE10-S4	437
BOS01H0	BOS 08E-PS-KH22-00,2-S49	375
BOS01H2	BOS 08E-PS-KF20-00,2-S49	375
BOS01H4	BOS 08E-PS-KH22-S49	375
BOS01H6	BOS 08E-PS-KF20-S49	375
BOS01HK	BOS 18M-PS-IR23-S4	397
BOS01HR	BOS 18M-PA-IR21-S4	397
BOS01J4	BOS 18M-PA-RH23-S4	377
BOS01J7	BOS 18M-PUV-RE30-S4	425
BOS01J8	BOS 18M-PUV-RD30-S4	351
BOS01JA	BOS 50K-PU-RD11-S4	361

BOS01JJ	BOS 50K-PI-RD11-S4	361
BOS01JK	BOS 5K-PU-LH12-S75	381
BOS01JP	BOS 5K-PU-LX10-S75	433
BOS01JT	BOS 5K-PU-LR10-02	405
BOS01JW	BOS 5K-PU-LR10-S75	405
BOS01K1	BOS 64K-AA-IH12-TG	387
BOS01K2	BOS 64K-AA-ID10-TG	361
BOS01K3	BOS 64K-AA-PR10-TG	409
BOS01K4	BOS 64K-AA-IE10-TG	439
BOS01K5	BOS 64K-AA-IS10-TG	439
BOS01KE	BOS 18E-PA-RD20-S4	351
BOS01KL	BOS 18E-PA-PR20-S4	399
BOS01KM	BOS 18E-PA-RE20-S4	427
BOS01KT	BOS 18E-X-RS20-S4	427
BOS01KW	BOS 6K-PU-RH10-S49	383
BOS01KY	BOS 6K-PU-RH10-S75	383
BOS01L3	BOS 6K-PU-RH11-S75	383
BOS01L8	BOS 6K-PU-PT10-S75	407
BOS01LE	BOS 6K-PU-LH10-S75	383
BOS01LU	BOS 6K-PU-LE10-S49	435
BOS01LW	BOS 6K-PU-LE10-S75	435
BOS01M1	BOS 6K-XT-LS10-S49	435
BOS01M2	BOS 6K-XT-LS10-S75	435
BOS01M4	BOS 6K-PU-LK10-S75	405
BOS01MH	BOS 6K-PU-PR10-S49	405
BOS01MJ	BOS 6K-PU-PR10-S75	407
BOS01MP	BOS Q08M-PS-LR20-S49	403
BOS01MU	BOS Q08M-PS-LR20-00,2-S49	403
BOS01MW	BOS Q08M-PO-LR20-00,2-S49	403
BOS01NA	BOS 18KF-PA-1XA-SA1-C-00,2	351
BOS01NC	BOS 23K-PA-LK10-S4	409
BOS01NE	BOS 18M-PA-LR20-S4	397
BOS01NF	BOS 18M-PA-LD20-S4	349
BOS01NH	BOS 18M-XT-LS20-S4	425
BOS01NJ	BOS 18M-PA-LE20-S4	425
BOS01NN	BOS 08E-PS-KD20-S49	347
BOS01R8	BOS 08E-PS-KD20-00,2-S49	347
BOS01RJ	BOS Q08M-PS-KD20-S49	353
BOS01RK	BOS 08E-PS-PR20-S49	397
BOS01RL	BOS 08E-PS-PR20-00,2-S49	397
BOS01RM	BOS 08E-PO-PR20-S49	397
BOS01RZ	BOS Q08M-PS-KD20-00,2-S49	353
BOS01T8	BOS Q08M-PS-PR20-S49	403
BOS01T9	BOS Q08M-PS-PR20-00,2-S49	403
BOS01TN	BOS 12M-PS-RD11-S4	347
BOS01TP	BOS 12M-PS-RD10-S4	347
BOS01TT	BOS 12M-PS-PR10-S4	397
BOS01TU	BOS 12M-PS-RD12-S4	347
BOS01TW	BOS 12M-X-RS10-S4	425
BOS01TY	BOS 12M-PS-RE10-S4	423
BOS01U3	BOS 08E-PS-LE20-S49	423
BOS01U8	BOS 08E-X-LS20-S49	423
BOS01UA	BOS 18M-PI-RD30-S4	349
BOS01UC	BOS 18M-PI-RE30-S4	425
BOS01UE	BOS 18M-PI-PR30-S4	399
BOS01UF	BOS 18M-XI-RS30-S4	427
BOS01UM	BOS 12M-PA-RF10-S4	375
BOS01UW	BOS 23K-UU-LH11-S92	385
BOS01WC	BOS Q08M-PS-LD20-S49	353
BOS01Y2	BOS 12M-PS-ID10-S4	347
BOS01Y4	BOS Q08M-PS-KE21-S49	431
BOS01Y6	BOS Q08M-PS-KE21-00,2-S49	431
BOS01Y7	BOS Q08M-PO-KE21-S49	431
BOS01YK	BOS Q08M-X-KS21-S49	431
BOS01YM	BOS Q08M-X-KS21-00,2-S49	431
BOS01Z5	BOS 08E-X-KS20-S49	423
BOS01Z8	BOS 21M-PA-RH22-S4	385
BOS01Z9	BOS 21M-PA-LH23-S4	383
BOS01ZT	BOS 12M-PA-RF11-S4	375
BOS01ZU	BOS 12M-PA-RH12-S4	377
BOS002H	BOS 18M-PS-LH22-S4	377
BOS002K	BOS 18M-PSV-LH22-S4	377
BOS008A	BOS 26K-PA-1IE-S4-C	387
BOS008E	BOS 26K-PA-1LHB-S4-C	387
BOS008F	BOS 26K-PA-1LHC-S4-C	387
BOS008L	BOS 26K-PA-1LQP-S4-C	409
BOS008M	BOS 26K-PA-1QE-S4-C	409
BOS010J	BOS 18MR-PS-1HA-E5-C-S4	377
BOS011E	BOS 5K-NS-RH12-02	383
BOS011R	BOS 5K-PO-IX10-S75	433
BOS012A	BOS 5K-PS-RH12-S75	383
BOS012C	BOS 5K-PS-RR10-02	405
BOS012E	BOS 5K-PS-RR10-S75	405
BOS014W	BOS 18M-PA-RH22-S4	377
BOS015E	BOS 5K-PS-RR10-S49	405
BOS015J	BOS 5K-PS-ID10-S49	355
BOS015N	BOS 5K-PS-RD11-S49	357
BOS015U	BOS 5K-PS-RH12-S49	383
BOS0016	BOS 18E-PS-1N2M-S4-D	379
BOS016E	BOS 23K-XT-RS11-S4	437
BOS016F	BOS 23K-PU-RE10-S4	437
BOS016K	BOS 23K-XT-LS11-S4	437
BOS016L	BOS 23K-PU-LE10-S4	437
BOS016P	BOS 23K-PU-RR10-S4	409
BOS016U	BOS 23K-PU-LR10-S4	409
BOS016Z	BOS 23K-PU-RD10-S4	359
BOS016Z	BOS 23K-PU-RD10-S4	359
BOS017C	BOS 23K-PU-LH10-S4	385
BOS017H	BOS 23K-PU-LH20-S4	385
BOS018N	BOS 50K-PS-RH12-S4	387
BOS018P	BOS 50K-PA-RH12-S4	387
BOS020A	BOS 08E-PO-KE20-S49	423
BOS020F	BOS 08E-PS-KE20-S49	423
BOS020K	BOS R020K-PS-RF11-02	379
BOS020M	BOS R020K-PS-RF11-00,2-S49	379
BOS020N	BOS R020K-PS-RF11-00,2-S75	379
BOS020R	BOS R020K-PS-PR11-02	403
BOS020T	BOS R020K-PS-PR11-00,2-S49	403
BOS020U	BOS R020K-PS-PR11-00,2-S75	403
BOS021C	BOS R020K-PS-RF10-00,2-S49	379
BOS021J	BOS R01E-PS-KD20-00,2-S49	355
BOS021K	BOS R01E-PS-KD20-02	355
BOS021L	BOS R01E-PS-KR20-00,2-S49	403
BOS021M	BOS R01E-PS-KR20-02	405
BOS021N	BOS R01E-PS-KE20-00,2-S49	433
BOS021P	BOS R01E-PS-KE20-02	433
BOS021R	BOS R01E-X-KS20-00,2-S49	433
BOS021T	BOS R01E-X-KS20-02	433
BOS021U	BOS R01E-PS-KF20-00,2-S49	381
BOS021W	BOS R01E-PS-KF20-02	381
BOS022C	BOS R020K-PS-RH12-02	381
BOS022N	BOS R01E-PS-KF21-02	381
BOS023H	BOS 18E-PI-RE30-S4	427
BOS023J	BOS 18E-XI-RS30-S4	427
BOS023U	BOS 18E-X-RS30-S4	427
BOS023W	BOS 18E-PA-RE30-S4	427
BOS023Y	BOS 18E-PA-PR30-S4	399
BOS026K	BOS 21M-UUI-LH31-S4	385
BOS026R	BOS 21M-UUI-RP30-S4	345
BOS027M	BOS 21M-PAI-PR30-S4	407
BOS027N	BOS 21M-PAI-RD30-S4	359
BOS027P	BOS 21M-XI-RS31-S4	437
BOS027R	BOS 21M-PAI-RE30-S4	437
BOS0031	BOS 21M-PA-ID10-S4	357
BOS0032	BOS 21M-PA-LD10-S4	357
BOS0033	BOS 21M-PA-RD10-S4	357

BOS0036	BOS 21M-PUS-RV13-S4	385
BOS0081	BOS 18MR-PA-1HA-S4-C	377
BOS0089	BOS 26K-PA-1HC-S4-C	387
BOS0121	BOS 5K-PO-RR10-S75	405
BOS0123	BOS 5K-PS-ID10-02	355
BOS0124	BOS 5K-PS-ID10-S75	355
BOS0125	BOS 5K-PS-IX10-02	433
BOS0126	BOS 5K-PS-IX10-S75	433
BOS0127	BOS 5K-PS-RD11-02	355
BOS0128	BOS 5K-PS-RD11-S75	357
BOS0156	BOS 50K-PSV-RH12-S4	387
BOS0175	BOS 23K-PU-LD20-S4	359
BOS0178	BOS 23K-PU-RH10-S4	385
BOS0211	BOS R020K-PS-RX11-02	431
BOS0214	BOS R020K-PS-RX11-00,2-S49	431
BOS0217	BOS R020K-PS-RF12-00,2-S49	381
BOS0234	BOS R020K-PS-RH12-00,2-S75	381
BOS0246	BOS 08E-PI-KH22-00,2-S49	375
BOS0247	BOS 08E-PI-KH22-S49	375
BOS0265	BOS R01E-UI-KH22-00,2-S49	381
BOS0285	BOS R254K-UUI-LH10-S4	385
BOS0286	BOS R254K-UUI-PR10-S4	407
BOW001A	BOW A-0408-PS-C-S49	489
BOW001J	BOW A-0808-PS-C-S49	489
BOW002A	BOW A-1616-NS-C-S49	489
BOW002H	BOW A-1216-PS-C-S49	489
BOW002J	BOW A-1616-PS-C-S49	489
BOW002U	BOW B-0404-DU-C-S75	489
BOW002Y	BOW B-0808-DU-C-S75	491
BOW0012	BOW A-1208-PS-C-S49	489
BOW0029	BOW A-1216-NS-C-S49	489
BOW0031	BOW B-1212-DU-C-S75	491
BOW0034	BOW B-1616-DU-C-S75	491
BOW0037	BOW B-2020-DU-C-S75	491
BWL000C	BWL 4040D-L011-S49	477
BWL000F	BWL 4040D-R011-S49	479
BWL000J	BWL 4040D-R013-S49	479
BWL000L	BWL 5454D-I011-S49	477
BWL000N	BWL 5454D-L011-S49	477
BWL000R	BWL 5454D-R011-S49	481
BWL000U	BWL 5454D-R013-S49	479
BWL000Y	BWL 6868D-I011-S49	477
BWL0001	BWL 110110D-I011-S49	477
BWL001C	BWL 9090D-R013-S49	479
BWL001N	BWL 6868D-R013-S49	479
BWL0003	BWL 110110D-L011-S49	479
BWL0005	BWL 110110D-R011-S49	481
BWL0007	BWL 110110D-R013-S49	479
BWL0009	BWL 4040D-I011-S49	477
BWL0010	BWL 6868D-L011-S49	477
BWL0012	BWL 6868D-R011-S49	481
BWL0015	BWL 9090D-I011-S49	477
BWL0017	BWL 9090D-L011-S49	479
BWL0019	BWL 9090D-R011-S49	481

Alphanumeric Index

SORTED BY PART NUMBER

BES03Z6	**BES G03EC-PSC10B-EP02**	**15**
BES0409	**BES G03EC-PSC10B-EP00,3-GS49**	**15**
BES0122	**BES G04EC-PSC08B-S26G**	**15**
BES012F	**BES G04ED-PSC15B-S26G**	**15**
BES012H	**BES G04ED-PSC50F-EP02**	**15**
BES012J	**BES G04ED-PSC50F-EP05**	**15**
BES0120	**BES G04EC-POC08B-S26G**	**15**
BES012K	**BES G04ED-PSC50F-S26G**	**17**
BES01P0	**BES M04EC-PSD06B-BP02**	**17**
BES03Z8	**BES M04EC-PSC10B-EP02**	**17**
BES040R	**BES M04EC-PSC10B-EP00,3-GS49**	**17**
BES051J	**BES M05ED-PSC10B-EP00,2-097**	**17**
BES012Z	**BES M05EC-PSC08B-S26G**	**17**
BES051L	**BES M05ED-POC10B-EP00,3-097**	**17**
BES03ZJ	**BES M04EC-NSC10B-EP02**	**17**
BES012W	**BES M05EC-NSC08B-S26G**	**17**
BES013A	**BES M05ED-PSC15B-S26G**	**19**
BES013E	**BES M05ED-PSC50F-EP02**	**19**
BES013F	**BES M05ED-PSC50F-EP05**	**19**
BES013C	**BES M05ED-PSC50F-EP00,3-GS04**	**19**
BES013H	**BES M05ED-PSC50F-S26G**	**19**
BES025U	**BES G06K40-PSC15B-FP02**	**19**
BES0137	**BES M05ED-POC15B-S26G**	**19**
BES0139	**BES M05ED-POC50F-S26G**	**19**
BES0130	**BES M05ED-NOC15B-S26G**	**19**
BES0256	**BES G06E60-PSC15B-EP02**	**21**
BES025L	**BES G06EA-PSC15B-EP01**	**21**
BES025M	**BES G06EA-PSC15B-EP02**	**21**
BES0258	**BES G06E60-PSC20B-EP02**	**21**
BES03ZA	**BES G06K40-PSC20B-FP02**	**21**
BES0254	**BES G06E60-PSC15B-EP00,3-GS49**	**21**
BES0251	**BES G06E60-POC15B-EP02**	**21**
BES025H	**BES G06EA-POC15B-EP02**	**21**
BES0257	**BES G06E60-PSC20B-EP00,3-GS49**	**23**
BES025N	**BES G06EA-PSD15B-S49G**	**23**
BES03R9	**BES G06EE-PSC20B-S49G-003**	**23**
BES03P4	**BES G06EH-PSC20B-S49G**	**23**
BES038Y	**BES G06EI-PSC30B-S49G**	**23**
BES051H	**BES G06E60-POC15B-EP01-GS49**	**23**
BES000E	**BES G06ED-PSC40F-BP02**	**25**
BES0005	**BES G06EB-PSC40F-S49G**	**25**
BES01NP	**BES G06EF-PSC40F-S49G**	**25**
BES03P5	**BES G06EH-PSC40F-S49G**	**25**
BES03EJ	**BES G06MH-PSC30B-BP00,3-GS49**	**25**
BES0008	**BES G06ED-NSC40F-BP02**	**25**
BES05WE	**BES G06EI-PSC40B-S49G**	**27**
BES012R	**BES G08EG-PSC15B-BP05**	**27**
BES01NY	**BES G08EG-PSC15B-BV02**	**27**
BES012T	**BES G08EG-PSC15B-BV05**	**27**
BES012L	**BES G08EE-PSC20B-BP02**	**27**
BES026M	**BES M08E60-PSC15B-EP02**	**27**
BES0275	**BES M08EA-PSC15B-EP02**	**29**
BES014K	**BES M08EF-PSC15B-BP02**	**29**
BES0034	**BES M08MI-PSC15B-BP02**	**29**
BES0036	**BES M08MI-PSC15B-BP05**	**29**
BES00CR	**BES M08EF-POC15B-BP02-003**	**29**
BES0031	**BES M08MI-POC15B-BV03**	**29**
BES00CN	**BES M08EF-NSC15B-BP02-003**	**29**
BES002H	**BES M08MI-NSC15B-BV03**	**29**
BES0037	**BES M08MI-PSC15B-BV02**	**31**
BES0389	**BES M08EE-PSC20B-EP05-511**	**31**
BES00CW	**BES M08EF-PSC20B-BP02-003**	**31**
BES003F	**BES M08MI-PSC20B-BP02**	**31**
BES003J	**BES M08MI-PSC20B-BP05**	**31**
BES0032	**BES M08MI-POC15B-BV05**	**31**
BES002P	**BES M08MI-NSC20B-BV02**	**31**
BES03TL	**BES M08MI-PSC20B-BP10**	**33**
BES003K	**BES M08MI-PSC20B-BV02**	**33**
BES003M	**BES M08MI-PSC20B-BV05**	**33**
BES0276	**BES M08EA-PSC20B-EP00,3-GS49**	**33**
BES0277	**BES M08EA-PSD15B-S49G**	**33**
BES03TH	**BES M08MI-POC20B-BV02**	**33**
BES0270	**BES M08EA-POD15B-S49G**	**33**
BES013N	**BES M08EC-PSC15B-S49G**	**35**
BES013M	**BES M08EC-PSC15B-S04G**	**35**
BES0147	**BES M08EE-PSC15B-S49G**	**35**
BES0146	**BES M08EE-PSC15B-S04G**	**35**
BES01P7	**BES M08EG-PSC15B-S49G**	**35**
BES013K	**BES M08EC-POC15B-S49G**	**35**
BES0143	**BES M08EE-POC15B-S49G**	**35**
BES0142	**BES M08EE-POC15B-S04G**	**35**
BES01PE	**BES M08EH-POC15B-S04G**	**35**
BES013J	**BES M08EC-NSC15B-S49G**	**35**
BES013Y	**BES M08EE-NSC15B-S04G**	**35**
BES01PC	**BES M08EH-NSC15B-S04G**	**35**
BES003C	**BES M08MI-PSC15B-S49G**	**37**
BES0027	**BES M08MH1-PSC15B-S04G**	**37**
BES0278	**BES M08EA-PSD20B-S49G**	**37**
BES013P	**BES M08EC-PSC20B-S49G**	**37**
BES03P6	**BES M08MI-POC15B-S49G**	**37**
BES0026	**BES M08MH1-POC15B-S04G**	**37**
BES013L	**BES M08EC-POC20B-S49G**	**37**
BES002K	**BES M08MI-NSC15B-S49G**	**37**
BES0024	**BES M08MH1-NSC15B-S04G**	**37**
BES014A	**BES M08EE-PSC20B-S49G**	**39**
BES0149	**BES M08EE-PSC20B-S04G-101**	**39**
BES01PH	**BES M08EH-PSC20B-S04G**	**39**
BES003P	**BES M08MI-PSC20B-S49G**	**39**
BES0028	**BES M08MH1-PSC20B-S04G**	**39**
BES0145	**BES M08EE-POC20B-S49G**	**39**
BES0033	**BES M08MI-POC20B-S49G**	**39**
BES03T5	**BES M08MH1-POC20B-S04G**	**39**
BES002U	**BES M08MI-NSC20B-S49G**	**39**
BES0025	**BES M08MH1-NSC20B-S04G**	**39**
BES0427	**BES M08EE-PSC25B-S49G**	**41**
BES054N	**BES M08MI-PSC30B-S49G**	**41**
BES02W9	**BES M08MH1-PSC30B-S04G**	**41**
BES000Y	**BES M08ED-PSC40F-BP02**	**41**
BES0016	**BES M08EG-PSC40F-BP02**	**41**
BES0014	**BES M08EG-POC40F-BP02**	**41**

BES02W7	**BES M08MH1-NSC30B-S04G**	**41**
BES000T	**BES M08ED-NSC40F-BV02**	**41**
BES0013	**BES M08EG-NSC40F-BV02**	**41**
BES01P3	**BES M08ED-PSC25F-S04G**	**43**
BES01P8	**BES M08EG-PSC25F-S04G**	**43**
BES000M	**BES M08EB-PSC40F-S49G**	**43**
BES014M	**BES M08EF-PSC40F-S49G**	**43**
BES001J	**BES M08EH-PSC40F-S49G**	**43**
BES01P9	**BES M08EG1-PSC40F-S04G**	**43**
BES01P6	**BES M08EG-POC25F-S04G**	**43**
BES000L	**BES M08EB-POC40F-S49G**	**43**
BES001F	**BES M08EH-POC40F-S49G**	**43**
BES01P5	**BES M08EG-NSC25F-S04G**	**43**
BES001C	**BES M08EH-NSC40F-S49G**	**43**
BES001H	**BES M08EH-PSC40F-S04G**	**45**
BES054Z	**BES M08EH1-PSC60F-S49G**	**45**
BES058J	**BES M08EH1-PSC60F-S04G**	**45**
BES05U9	**BES M08MM-PSC40B-BP00,3-GS04**	**45**
BES001E	**BES M08EH-POC40F-S04G**	**45**
BES0550	**BES M08EH1-POC60F-S49G**	**45**
BES001A	**BES M08EH-NSC40F-S04G**	**45**
BES05UA	**BES M08MM-NSC40B-BP00,3-GS04**	**45**
BES05U8	**BES M08MM-PSC40B-BP00,3-GS49**	**47**
BES01ZW	**BES M08MI-PSC40B-S49G**	**47**
BES02W6	**BES M08MH-PSC40B-S49G-507**	**47**
BES04TU	**BES G10ED-PSC08B-EP00,3-GS49**	**47**
BES01ZT	**BES M08MI-NSC40B-S49G**	**47**
BES02C9	**BES 516-449-BO-L-05**	**47**
BES027M	**BES 516-207-BO-E-03**	**47**
BES00E5	**BES M12MD-PSC40B-BP02-003**	**49**
BES0062	**BES M12MI-PSC40B-BP03**	**49**
BES0064	**BES M12MI-PSC40B-BV02**	**49**
BES0057	**BES M12MI-NSC40B-BV03**	**49**
BES0058	**BES M12MI-NSC40B-BV05**	**49**
BES027N	**BES 516-207-BO-E-05**	**49**
BES0001	**BES M12MI-PSC40B-BV03**	**51**
BES0065	**BES M12MI-PSC40B-BV05**	**51**
BES00PW	**BES 516-325-G-E4-C-S4-00,5**	**51**
BES035E	**BES 516-325-SA45**	**51**
BES00PK	**BES 516-325-E5-C-S4**	**51**
BES00YT	**BES 516-370-E5-C-S4**	**51**
BES032M	**BES 516-113-SA3-S4-C**	**51**
BES0060	**BES M12MI-PSC20B-S04G**	**53**
BES01C8	**BES 516-325-S4-C**	**53**
BES02FP	**BES 515-449-SA7-S21**	**53**
BES027U	**BES 516-207-S21-E**	**53**
BES027W	**BES 516-207-S27-E**	**53**
BES04FK	**BES M12MI-PSIC20C-S04G**	**53**
BES00PZ	**BES 516-325-G-E5-C-S49**	**55**
BES00EF	**BES M12ME-PSC40B-S04G-003**	**55**
BES00PY	**BES 516-325-G-E5-C-S4**	**55**
BES014W	**BES M12EE-PSC40B-S04G**	**55**
BES01K6	**BES 516-370-S4-C**	**55**
BES0161	**BES 516-113-S4-C**	**55**
BES0068	**BES M12MI-PSC40B-S04G**	**57**
BES02FU	**BES M12EI-PSC40B-S04G**	**57**
BES01C7	**BES 516-325-G-S4-C**	**57**
BES03AR	**BES 516-325-G-S4-L**	**57**
BES00Z0	**BES 516-370-G-E5-C-S4**	**57**
BES005N	**BES M12MI-POC40B-S04G**	**57**
BES0059	**BES M12MI-NSC40B-S04G**	**57**
BES027T	**BES 516-207-G-S21-E**	**57**
BES00UY	**BES 516-356-E5-C-S4**	**59**
BES036T	**BES 516-356-SA26-S4-C**	**59**
BES0285	**BES 516-209-BO-E-03**	**59**
BES0286	**BES 516-209-BO-E-05**	**59**
BES028A	**BES 516-209-S21-E**	**59**
BES0330	**BES 516-209-SA1-S21-E**	**59**
BES028F	**BES 516-210-BO-E-03**	**59**
BES01H6	**BES 516-356-S4-C**	**61**
BES036R	**BES 516-356-SA24-S4-C**	**61**
BES01PY	**BES M12MD-PSC80F-S04G**	**61**
BES01PN	**BES M12EG-PSC80F-S04G**	**61**
BES004N	**BES M12MG-PSC80F-S04G**	**61**
BES0178	**BES 516-131-S4-C**	**61**
BES02WK	**BES M12MC1-PSC10F-S04G**	**63**
BES02WR	**BES M12MF1-PSC10F-S04G**	**63**
BES02WM	**BES M12MD1-PSC60B-S04G**	**63**
BES02WZ	**BES M12MG1-PSC60B-S04G**	**63**
BES01ZN	**BES M12MI-PSH80B-S04G**	**63**
BES02WY	**BES M12MG1-POC60B-S04G**	**63**
BES0289	**BES 516-209-G-S21-E**	**63**
BES0083	**BES M18MI-PSC50B-BV03**	**65**
BES02AU	**BES 516-420-E4-L-02**	**65**
BES02AW	**BES 516-420-E4-L-05**	**65**
BES028L	**BES 516-211-E4-E-03**	**65**
BES028N	**BES 516-211-E4-E-PU-05**	**65**
BES028U	**BES 516-211-E6-E-05**	**65**
BES04F1	**BES M18MD-PSC80B-BP05-003**	**67**
BES008E	**BES M18MI-PSC80B-BV02**	**67**
BES0089	**BES M18MI-PSC80B-BP03**	**67**
BES008F	**BES M18MI-PSC80B-BV03**	**67**
BES007H	**BES M18MI-NSC80B-BP03**	**67**
BES007J	**BES M18MI-NSC80B-BV03**	**67**
BES008H	**BES M18MI-PSC80B-BV05**	**69**
BES00R5	**BES 516-326-E4-C-S4-00,2**	**69**
BES00EY	**BES M18ME-PSC50B-S04G-003**	**69**
BES00R6	**BES 516-326-E5-C-S4**	**69**
BES02ET	**BES 515-326-E5-T-S4**	**69**
BES0086	**BES M18MI-PSC50B-S04G**	**69**
BES02EU	**BES 515-326-S4-C**	**71**
BES01CW	**BES 516-326-S4-C**	**71**
BES00RC	**BES 516-326-G-E5-C-S4**	**71**
BES02P3	**BES 516-326-SA96-G-E5-Y-S4**	**71**
BES01JW	**BES 516-367-S4-C**	**71**
BES015N	**BES 516-105-S4-C**	**71**
BES028R	**BES 516-211-E5-E-S27**	**71**
BES008L	**BES M18MI-PSC80B-S04G**	**73**
BES02H0	**BES M18EI-PSC80B-S04G**	**73**
BES0496	**BES M18MI2-PSC80B-S04G**	**73**
BES03RP	**BES M18MI-POC80B-S04G**	**73**
BES007M	**BES M18MI-NSC80B-S04K**	**73**
BES02ZE	**BES M18MN-USU80B-S21G**	**73**
BES02C5	**BES 516-437-E4-L-02**	**73**
BES00WM	**BES 516-360-E5-Y-S4**	**75**
BES0292	**BES 516-213-E4-E-03**	**75**
BES02C7	**BES 516-437-E5-L-S21**	**75**
BES0296	**BES 516-213-E5-E-S21**	**75**
BES0297	**BES 516-213-E5-E-S27**	**75**
BES0298	**BES 516-213-E5-E-S5**	**75**
BES01HY	**BES 516-360-S4-C**	**77**
BES03RM	**BES M18MG-PSC16F-S04G**	**77**
BES0070	**BES M18MG-PSC16F-S04K**	**77**
BES01HW	**BES 516-360-G-S4-H**	**77**
BES016W	**BES 516-123-G-S4-H**	**77**
BES05EY	**BES M18MG-PSC20F-S04G**	**79**
BES05ER	**BES M18ME-PSC12B-S04G**	**79**
BES05EU	**BES M18MI-PSC12B-S04G**	**79**
BES00RE	**BES 516-327-E4-Y-01,5**	**79**
BES00A1	**BES M30MI-PSC10B-BV03**	**79**
BES009E	**BES M30MI-NSC10B-BV03**	**79**
BES029L	**BES 516-215-E4-E-03**	**79**
BES00RT	**BES 516-327-G-E4-Y-03**	**81**
BES00AA	**BES M30MI-PSC15B-BV02**	**81**
BES00AC	**BES M30MI-PSC15B-BV03**	**81**
BES00LR	**BES 516-3028-G-E4-Y-PU-05**	**81**

BES00LT	**BES 516-3028-G-E4-Y-S4-01**	**81**
BES029M	**BES 516-215-E4-E-05**	**81**
BES00RP	**BES 516-327-E5-Y-S4**	**83**
BES02F0	**BES 515-327-E5-T-S4**	**83**
BES00A3	**BES M30MI-PSC10B-S04G**	**83**
BES00A4	**BES M30MI-PSC10B-S04K**	**83**
BES0316	**BES 516-418-E5-L-S27**	**83**
BES02E9	**BES 515-215-E5-E-S21**	**83**
BES02F1	**BES 515-327-S4-C**	**85**
BES01EE	**BES 516-327-S4-C**	**85**
BES00RW	**BES 516-327-G-E5-Y-S4**	**85**
BES00AF	**BES M30MI-PSC15B-S04G**	**85**
BES00LU	**BES 516-3028-G-E5-Y-S4**	**85**
BES0167	**BES 516-114-S4-C**	**85**
BES029W	**BES 516-215-E5-E-S5**	**85**
BES01EA	**BES 516-327-G-S4-C**	**87**
BES01EC	**BES 516-327-G-S4-H**	**87**
BES00AY	**BES M30MM-PSC30F-BV02**	**87**
BES00Y0	**BES 516-362-E5-Y-S4**	**87**
BES0166	**BES 516-114-G-S4-H**	**87**
BES02A5	**BES 516-217-E4-E-03**	**87**
BES02FN	**BES 515-362-S4-C**	**89**
BES01JE	**BES 516-362-S4-C**	**89**
BES00AZ	**BES M30MM-PSC30F-S04K**	**89**
BES01JC	**BES 516-362-G-S4-H**	**89**
BES02AC	**BES 516-217-E5-E-S27**	**89**
BES02AE	**BES 516-217-E5-E-S5**	**89**
BES02YJ	**BES M30MG1-PSC40F-S04G**	**91**
BES02YM	**BES M30MI1-PSC22B-S04G**	**91**
BES01FJ	**BES 516-347-MO-C-03**	**91**
BES01FK	**BES 516-347-MO-C-05**	**91**
BES01FM	**BES 516-347-MO-C-PU-05**	**91**
BES02YL	**BES M30MI1-POC22B-S04G**	**91**
BES0341	**BES 516-3009-SA2-MO-C-05**	**91**
BES01FN	**BES 516-347-MO-C-S4-00,2**	**93**
BES01FT	**BES 516-347-MO-C-S49-00,2**	**93**
BES01FR	**BES 516-347-MO-C-S49**	**93**
BES017H	**BES 516-133-MO-C-PU-05**	**93**
BES032R	**BES 516-133-SA3-C-PU-04**	**93**
BES0153	**BES 516-133-MO-C-S4-00,2**	**93**
BES01Z5	**BES R05KB-PSC20B-EP05**	**95**
BES01ZA	**BES R05KB-PSC40B-EV02**	**95**
BES01YZ	**BES R05KB-NSC20B-EP05**	**95**
BES02CT	**BES R05KB-USU20B-EV02**	**95**
BES02CU	**BES R05KB-USU20B-EV03**	**95**
BES02CY	**BES R05KB-USU40B-EV02**	**95**
BES01ZC	**BES R05KB-PSC40B-EV03**	**97**
BES01Z8	**BES R05KB-PSC40B-EP00,3-GS04**	**97**
BES01Z7	**BES R05KB-PSC20B-S49A**	**97**
BES01ZE	**BES R05KB-PSC40B-S49A**	**97**
BES01N5	**BES 517-398-NO-C-03**	**97**
BES01N6	**BES 517-398-NO-C-05**	**97**
BES048A	**BES R05KB-POC20B-S49A**	**97**
BES01Z2	**BES R05KB-POC40B-S49A**	**97**
BES01NH	**BES 517-399-NO-C-03**	**97**
BES01N8	**BES 517-398-NO-C-PU-03**	**99**
BES01N9	**BES 517-398-NO-C-PU-05**	**99**
BES01NA	**BES 517-398-NO-C-S49-00,2**	**99**
BES01N1	**BES 517-398-N1-C**	**99**
BES01N2	**BES 517-398-N2-C**	**99**
BES01MM	**BES 517-351-NO-C-03**	**99**
BES01MT	**BES 517-351-NO-C-S49-00,2**	**99**
BES033J	**BES 516-300-S279**	**101**
BES01WE	**BES R01ZC-PSC70B-BP00.2-GS49**	**101**
BES01WF	**BES R01ZC-PSC70B-BP00.3-GS49**	**101**
BES048Z	**BES R01ZC-PSC70B-BZ00,2-GS04-110**	**101**
BES01W4	**BES R01ZC-PAC70B-BP03**	**101**
BES033H	**BES 516-300-S255**	**101**
BES01W0	**BES R01ZC-NAC70B-BP05**	**101**
BES022Z	**BES 517-3036-I02-C-S4**	**103**
BES01W2	**BES R01ZC-PAC70B-BP00.2-GS04**	**103**
BES0314	**BES R01ZC-PAC70B-BP00.2-GS04-107**	**103**
BES01W3	**BES R01ZC-PAC70B-BP00.5-GS04**	**103**
BES030E	**BES Z03K-GSS10B-EP00,15-GS04-006**	**103**
BES030F	**BES Z03K-GSS10B-EP00,8-GS04-006**	**103**
BES052M	**BES Q40KFA-PSY20B-DV02**	**105**
BES0555	**BES Q40KFC-PSY20B-DV02**	**105**
BES02TN	**BES IKU-031.28-S4**	**105**
BES0201	**BES 517-132-M3-H**	**105**
BES021W	**BES Q40KFU-PSC20B-S04G**	**107**
BES0209	**BES 517-132-M6-H**	**107**
BES020A	**BES 517-132-M6-H-S4**	**107**
BES0217	**BES Q40KFU-PAC20B-S04G**	**107**
BES03PN	**BES Q40KHU-PAC20B-S04G**	**107**
BES0236	**BES 517-385-V-C-S4**	**109**
BES0206	**BES 517-132-M5-H**	**109**
BES020C	**BES 517-132-M7-H**	**109**
BES0244	**BES 517-223-U4-E**	**109**
BES023Y	**BES 517-223-M5-E**	**109**
BES0247	**BES 517-223-U5-E**	**109**
BES021Z	**BES Q40KFU-PSC30F-S04G**	**111**
BES0308	**BES Q40KFU-PSC40F-S04G-012**	**111**
BES021E	**BES Q40KFU-PAC30F-S04G**	**111**
BES020E	**BES 517-132-M7-H-S4**	**111**
BES030C	**BES Q80KA-PAC50B-S04Q-U**	**111**
BES023P	**BES 517-139-M4-H**	**113**
BES023R	**BES 517-139-M5-H**	**113**
BES024F	**BES 517-224-M5-E**	**113**
BES023W	**BES 517-139-U5-H-S4**	**113**
BES022R	**BES 517-460-U5-L-D**	**113**
BES001L	**BES M08MG-GSC20B-BV02**	**139**
BES0021	**BES M08MG-GSC20B-BP03**	**139**
BES001P	**BES M08MG-USC20B-BP03**	**139**
BES001T	**BES M08MG-USC20B-BV02**	**139**
BES001U	**BES M08MG-USC20B-BV03**	**139**
BES001W	**BES M08MG-USC20B-BV05**	**139**
BES001Z	**BES M08MG-GSC20B-BP00,3-GS04**	**141**
BES0324	**BES M08MG-GSC20B-BP00,3-GS04-101**	**141**
BES0022	**BES M08ME1-GSC20B-S04G**	**141**
BES001Y	**BES M08ME1-USC20B-S04G**	**141**
BES004T	**BES M12MG-USC30B-BV02**	**141**
BES03HH	**BES M08MG-UOC20B-BV03**	**141**
BES0046	**BES M12MG-GSC30B-BV03**	**143**
BES0474	**BES M12MG-GOC30B-BV03**	**143**
BES004P	**BES M12MG-USC30B-BP03**	**143**
BES004T	**BES M12MG-USC30B-BV02**	**143**
BES004U	**BES M12MG-USC30B-BV03**	**143**
BES004W	**BES M12MG-USC30B-BV05**	**143**
BES03HM	**BES M12MG-UOC30B-BV03**	**143**
BES0042	**BES M12MG-GSC30B-BP00,3-GS04**	**145**
BES0326	**BES M12MG-GSC30B-BP00,3-GS04-101**	**145**
BES039W	**BES M12MG-GSC30B-BX00,3-GS04-U**	**145**
BES003Z	**BES M12MF-GSC30B-S04G**	**145**
BES0041	**BES M12MF-USC30B-S04G**	**145**
BES0073	**BES M18MG-USC70B-BV02**	**145**
BES006C	**BES M18MG-GSC70B-BP00,3-GS04**	**147**
BES03FJ	**BES M18MG-GSC70B-BX00,3-GS04-U**	**147**
BES0069	**BES M18MF-GSC70B-S04K**	**147**
BES0074	**BES M18MG-USC70B-BV03**	**147**
BES0071	**BES M18MG-USC70B-BP03**	**147**
BES006A	**BES M18MF-USC70B-S04K**	**147**
BES0328	**BES M18MF-GSC70B-S04G**	**149**
BES03FH	**BES M18MF-GSC70B-S04G-U**	**149**
BES008R	**BES M30MF-GSC15B-BV02**	**149**
BES02NR	**BES M18MF-USC70B-S04G**	**149**
BES0091	**BES M30MF-USC15B-BV02**	**149**

BES0092	**BES M30MF-USC15B-BV03**	**149**
BES027K	**BES M30MF-GSC15B-BX00,3-GS04-U**	**151**
BES008W	**BES M30MF-GSC15B-S04K**	**151**
BES03KL	**BES M30MF-GSC15B-S04G-U**	**151**
BES008Z	**BES M30MF-USC15B-BP03**	**151**
BES0094	**BES M30MF-USC15B-S04K**	**151**
BHS006U	**BHS G409N-PSD10-EP02**	**157**
BHS007J	**BHS G409N-PSD10-EP00,3-GS49**	**157**
BHS006N	**BHS G403N-PSD10-S26**	**157**
BHS005H	**BHS G408N-PSC10-S49**	**157**
BES055Y	**BES M05EE1-PSC08B-EV00,9-116**	**157**
BES03H6	**BES M05EG-PSC08B-BP02**	**157**
BHS006Y	**BHS G409N-NSD10-EP02**	**157**
BES03JM	**BES M05EG-PSC08B-BP00,2-GS49**	**159**
BES03NZ	**BES M05ED-PSC08B-BP02-R50**	**159**
BES03L7	**BES M05ED-PSD08B-BP02-R03**	**159**
BES03LC	**BES M05ED-PSD08B-BP00,3-GS49-R03**	**159**
BES034K	**BES 516-324-SA17-05**	**159**
BES03UY	**BES M08EE1-PSC20B-S49G-S**	**159**
BES03LE	**BES M05ED-POD08B-BP00,3-GS49-R03**	**159**
BES0315	**BES M05EG-NSC08B-BP00,2-GS49**	**159**
BES03Z3	**BES M08EE1-NSC20B-S49G-S**	**159**
BHS0039	**BES 516-300-S289-BO-D-PU-05**	**161**
BHS0058	**BHS A407N-PSD15-BP02**	**161**
BHS0054	**BHS A404N-PSC15-S49**	**161**
BHS0050	**BHS A402N-PSC15-S49**	**161**
BES02N3	**BES M08EH1-NSC20B-S04G-S**	**161**
BES02N4	**BES M08EH1-NSC20B-S04G-S01**	**161**
BHS003A	**BES 516-300-S291-S4-D**	**163**
BES02NA	**BES M12EI-PSC40B-S04G-S**	**163**
BES02NC	**BES M12EI-PSC40B-S04G-S01**	**163**
BES02WH	**BES M12EG1-PSC60Z-S04G-S11**	**163**
BHS0008	**BES 516-200-S2/1.250“-S21**	**163**
BHS0006	**BES 516-200-S2/1.025“-S5**	**163**
BHS003M	**BES 516-300-S295/1.250“-S4**	**165**
BHS0041	**BES 516-300-S295/2.062“-S4**	**165**
BHS0009	**BES 516-200-S2/1.250“-S5**	**165**
BHS000T	**BES 516-200-S2/2.062“-S21**	**165**
BHS000U	**BES 516-200-S2/2.062“-S5**	**165**
BHS0014	**BES 516-200-S2/2.875“-S5**	**165**
BHS0030	**BES 516-300-S260-S4-D**	**167**
BHS0028	**BES 516-300-S205-D-PU-03**	**167**
BHS0029	**BES 516-300-S205-D-PU-05**	**167**
BES042M	**BES 516-300-S337-S4-D**	**167**
BES042L	**BES 516-300-S338-S4-D**	**167**
BHS0019	**BES 516-200-S2/4.560“-S5**	**167**
BHS004N	**BES 516-300-S321-S4-D**	**169**
BHS002H	**BES 516-300-S240-D-PU-03**	**169**
BHS002J	**BES 516-300-S240-D-PU-05**	**169**
BHS001F	**BES 516-300-S135-D-PU-05**	**169**
BHS0032	**BES 516-300-S262-S4-D**	**169**
BHS002Y	**BES 516-300-S249-S4-D**	**169**
BHS0033	**BES 516-300-S265-S4-D**	**171**
BHS005Y	**BHS B249V-PSD15-S04**	**171**
BHS0061	**BHS B265V-PSD15-S04**	**171**
BHS0021	**BES 516-300-S162-S4-D**	**171**
BHS001L	**BES 516-300-S135-S4-D**	**171**
BHS005R	**BHS B135V-PSD15-S04**	**171**
BHS0022	**BES 516-300-S163-S4-D**	**173**
BHS004C	**BES 516-300-S300-S4-D**	**173**
BHS005U	**BHS B135V-PSD25-S04-003**	**173**
BES02NK	**BES M18EI-PSC72B-S04G-S01**	**173**
BES02Y1	**BES M18EF1-PSC20F-S04G-S**	**173**
BHS0001	**BES 516-100-S45-S4-D**	**173**
BES02Y3	**BES M18EG1-PSC10Z-S04G-S11**	**175**
BHS001N	**BES 516-300-S144-S4-D**	**175**
BHS004A	**BES 516-300-S299-S4-D**	**175**
BHS0026	**BES 516-300-S190-S4**	**175**
BHS0027	**BES 516-300-S203**	**175**
BES02YF	**BES M30EG1-PSC20Z-S04G-S11**	**177**
BES02YC	**BES M30EE1-PSC40F-S04G-S**	**177**
BHS006M	**BES 516-300-S331-S4-D**	**177**
BES0444	**BES M12EE1-PSY20B-S04G-L01**	**185**
BES0433	**BES M12EE-PSC40B-S04G-L01**	**185**
BES0435	**BES M12EI-PSC40B-S04G-L01**	**185**
BES0443	**BES M12EE1-PSY40F-S04G-L01**	**185**
BES0441	**BES M18EE1-PSY50B-S04G-L01**	**185**
BES0437	**BES M18EI-PSC80B-S04G-L01**	**185**
BES02YR	**BES M08EG-PSC15A-S49G-W**	**189**
BES02YT	**BES M08EG1-PSC15A-S04G-W**	**189**
BES03YP	**BES M08MG1-PSC20A-S04G-W**	**189**
BES02JZ	**BES M12MF1-PSC30A-S04G-W**	**189**
BES02K0	**BES M12MF1-PSC30A-S04G-W01**	**189**
BES02K4	**BES M12ML-PSC30A-S04G-W01**	**191**
BES05KT	**BES M12MI-PSC40A-S04G-W08**	**191**
BES02K5	**BES M12ML-PSC80E-S04G-W**	**191**
BES05PR	**BES M18ME-PSC80A-S04G-W10**	**191**
BES05PN	**BES M18MI-PSC80A-S04G-W09**	**191**
BES05PP	**BES M18MI-PSC80A-S04G-W10**	**191**
BES05AL	**BES M18ME-PSC12E-S04G-W08**	**193**
BES05AM	**BES M18MI-PSC12E-S04G-W08**	**193**
BES02KM	**BES M30ML-PSC10A-S04G-W**	**193**
BES02KN	**BES M30ML-PSC10A-S04G-W01**	**193**
BES0454	**BES M30MI-PSC15A-S04G-W12**	**193**
BES04AH	**BES R01EC-PSC50A-BP00,3-GS04-W50**	**193**
BES04RE	**BES R01EC-PSC50A-BS00,3-GS04-W51**	**195**
BES049Y	**BES R01EC-PSC50A-BP00,3-GS04-W51**	**195**
BES021P	**BES Q40KFU-PSC15A-S04G**	**195**
BES021T	**BES Q40KFU-PSC15A-S04G-W01**	**195**
BES021U	**BES Q40KFU-PSC20A-S04G**	**195**
BES022K	**BES Q40KFU-PAC15A-S04G**	**195**
BES0222	**BES Q40KFU-PSC35Z-S04G-011**	**197**
BES0223	**BES Q40KFU-PSC40E-S04G**	**197**
BES0457	**BES Q40KFU-PAC20A-S04G-W01**	**197**
BES021H	**BES Q40KFU-PAC35E-S04G**	**197**
BES021K	**BES Q40KFU-PAC35E-S04G-W01**	**197**
BES021M	**BES Q40KFU-PAC40E-S04G**	**197**
BES02YZ	**BES M08EG1-PSC15S-S04G-S**	**203**
BES02N5	**BES M08EH1-PSC20B-S04G-S**	**203**
BES02N6	**BES M08EH1-PSC20B-S04G-S01**	**203**
BES02Z3	**BES M12EG1-PSC20S-S04G-S**	**203**
BES02Z2	**BES M12EG1-PSC20N-S04G-S**	**203**
BES04Z5	**BES M12EI-PSC40A-S04G-S**	**203**
BES0567	**BES M12EI-PSC40A-S04G-S02**	**205**
BES0510	**BES M12EI-PSC40S-S04G-S**	**205**
BES0511	**BES M12EI-PSC40N-S04G-S**	**205**
BES02Z9	**BES M18EG1-PSC50S-S04G-S**	**205**
BES02Z8	**BES M18EG1-PSC50N-S04G-S**	**205**
BES05K7	**BES M18EG1-PSC80A-S04G-S**	**205**
BES05NC	**BES M18EG1-PSC80A-S04G-S02**	**207**
BES05K8	**BES M18EG1-PSC80S-S04G-S**	**207**
BES05K9	**BES M18EG1-PSC80N-S04G-S**	**207**
BES02ZJ	**BES M30EG1-PSC80S-S04G-S**	**207**
BES02ZH	**BES M30EG1-PSC80N-S04G-S**	**207**
BES02J5	**BES 516-325-S4-CW**	**211**
BES02JM	**BES 516-356-S4-CW**	**211**
BES02J9	**BES 516-326-S4-CW**	**211**
BES02JH	**BES 516-327-S4-CW**	**211**
BES0481	**BES R01ZC-PSC50B-BZ03-V02**	**213**
BES048J	**BES R01ZC-PSC50B-BZ00,2-GS04-V02**	**213**
BES0493	**BES R01ZC-PSC50B-BZ00,2-GS49-V02**	**213**
BES048W	**BES R01ZC-PSC50B-BZ00,5-GS04-V02**	**213**
BES02PU	**BES M08MH1-PSC20B-S04G-101**	**217**
BES02PW	**BES M08MH1-PSC30B-S04G-101**	**217**
BES056A	**BES M12EI-PSC40B-S04G-S03**	**217**
BES02KC	**BES M18MI-PSC70B-S04G-W**	**217**

BES056C	**BES M18EI-PSC72B-S04G-S03**	**217**
BES048K	**BES R01ZC-PSC50B-BZ00,2-GS04-W05**	**219**
BES048N	**BES R01ZC-PSC50B-BZ00,2-GS04-W13**	**219**
BES048Y	**BES R01ZC-PSC70B-BZ00,2-GS04-108**	**219**
BES05RP	**BES M05ED-PSD08B-ES02-T**	**223**
BES05RR	**BES M05ED-PSD08B-ES05-T**	**223**
BES05RN	**BES M05ED-PSD08B-ES01-GS49-T**	**223**
BES05FN	**BES M08EM-PSD20B-ET05-T**	**223**
BES04CK	**BES 515-325-SA74-D-TF-02**	**223**
BES02HU	**BES 516-325-SA19-03**	**225**
BES02HW	**BES 516-325-SA19-05**	**225**
BES04CL	**BES 515-356-SA35-D-TF-02**	**225**
BES043T	**BES 515-326-SA49-D-TF-02**	**225**
BES04AT	**BES 515-326-SA49-D-TF-05**	**225**
BES02H5	**BES 516-105-SA2-05**	**225**
BES05N4	**BES M18ED-PSC50B-GT05-T**	**227**
BES04C7	**BES 515-360-SA13-D-TF-05**	**227**
BES043W	**BES 515-327-SA22-D-TF-02**	**227**
BES04AU	**BES 515-327-SA22-D-TF-05**	**227**
BES02H6	**BES 516-105-SA5**	**227**
BES02H7	**BES 516-114-SA1-05**	**227**
BES05N5	**BES M30N1-PSC10B-GT05-T**	**229**
BES043Y	**BES 515-362-SA4-D-TF-02**	**229**
BES04C8	**BES 515-362-SA4-D-TF-05**	**229**
BES05N7	**BES Q08EC-PSD20B-ES05**	**229**
BES05N8	**BES Q12EC-PSD40B-ES05**	**229**
BES02HE	**BES 516-125-SA1-05**	**229**
BES05N9	**BES Q40KG-PSD25F-S04G**	**231**
BES05N6	**BES Q40KG-X20F-SZ03**	**231**
BES02ZR	**BES G06MD-GNX10B-EV02-EEX**	**237**
BES02ZT	**BES M08MD-GNX10B-EV02-EEX**	**237**
BES05NE	**BES M12MG2-GNX20B-BT02-EXA**	**237**
BES05NM	**BES M12MG2-GNX20B-BT02-EXB**	**237**
BHS004L	**BES 516-300-S318-S4-N**	**237**
BES05M3	**BES M12EG2-PSC20B-BV02-EXF**	**237**
BES05L6	**BES M12MF2-PSC20B-BV02-EXE**	**237**
BHS002W	**BES 516-300-S249-NEX-S4-D**	**237**
BHS0034	**BES 516-300-S266-S4**	**239**
BHS004K	**BES 516-300-S315-S4-N**	**239**
BES05MW	**BES M12MG2-GNX20B-S04G-EXC**	**239**
BES02ZU	**BES M12ME-GNX40B-S04G-EEX**	**239**
BES05NF	**BES M12MG2-GNX40F-BT02-EXA**	**239**
BES05NN	**BES M12MG2-GNX40F-BT02-EXB**	**239**
BHS005P	**BHS B135V-PSD15-NEX-S04**	**239**
BES05L7	**BES M12MF2-PSC40F-BV02-EXE**	**239**
BES05MY	**BES M12MG2-GNX40F-S04G-EXC**	**241**
BES05NH	**BES M18MH2-GNX50B-BT02-EXA**	**241**
BES05NP	**BES M18MH2-GNX50B-BT02-EXB**	**241**
BES05MZ	**BES M18MH2-GNX50B-S04G-EXC**	**241**
BES05M4	**BES M18EG2-PSC50B-BV02-EXF**	**241**
BES05L2	**BES M18MF2-PSC50B-BV02-EXD**	**241**
BES05L8	**BES M18MF2-PSC50B-BV02-EXE**	**241**
BES02ZW	**BES M18ME1-GNX80B-S04G-EEX**	**243**
BES05NJ	**BES M18MH2-GNX80F-BT02-EXA**	**243**
BES05NR	**BES M18MH2-GNX80F-BT02-EXB**	**243**
BES05N0	**BES M18MH2-GNX80F-S04G-EXC**	**243**
BES05L3	**BES M18MF2-PSC80F-BV02-EXD**	**243**
BES05L9	**BES M18MF2-PSC80F-BV02-EXE**	**243**
BES05M5	**BES M30EG2-PSC10B-BV02-EXF**	**243**
BES05L4	**BES M30MF2-PSC10B-BV02-EXD**	**243**
BES05NK	**BES M30MH2-GNX10B-BT02-EXA**	**245**
BES05NT	**BES M30MH2-GNX10B-BT02-EXB**	**245**
BES05N1	**BES M30MH2-GNX10B-S04G-EXC**	**245**
BES02ZY	**BES M30ME1-GNX15B-S04G-EEX**	**245**
BES05NL	**BES M30MH2-GNX15F-BT02-EXA**	**245**
BES05LA	**BES M30MF2-PSC10B-BV02-EXE**	**245**
BES05L5	**BES M30MF2-PSC15F-BV02-EXD**	**245**
BES05LC	**BES M30MF2-PSC15F-BV02-EXE**	**245**
BES05NU	**BES M30MH2-GNX15F-BT02-EXB**	**247**
BES05N2	**BES M30MH2-GNX15F-S04G-EXC**	**247**
BES02ZZ	**BES Q40KFU-GNX20B-S92G-EEX**	**247**
BES0300	**BES Q40KFU-GNX35F-S92G-EEX**	**247**
BES050N	**BES G04ED-GNX08B-EP02**	**255**
BES02L6	**BES 516-3005-FO-N-03**	**255**
BES050P	**BES M05ED-GNX08B-EP02**	**255**
BES02LA	**BES 516-324-EO-N-03**	**255**
BES02LE	**BES 516-325-E3-N-PU-05**	**255**
BES0568	**BES Q08ZC-GNX15B-EP02**	**255**
BES03M5	**BES R04KC-GNX15B-EP02**	**255**
BES03JA	**BES IKVS-010.23-G-S4**	**259**
BES03JC	**BES IKVS-015.23-G-S4**	**259**
BES03JH	**BES IKVS-025.23-G-S4**	**259**
BES0429	**BES Z06K-PSC16F-BP00,1-GS04**	**259**
BES0428	**BES Z06K-PSC16F-S49G**	**259**
BAW000J	**BAW G06EE-UAF20B-EP03-K**	**263**
BAW000T	**BAW M08EI-UAD15B-BP03**	**263**
BAW0040	**BAW Z08EO-UAD20B-S04G-H11**	**263**
BAW004K	**BAW M12ME-UAC35C-S04G**	**263**
BAW006A	**BAW M12MF-IAC35C-S04G**	**263**
BAW0069	**BAW M12MF-ICC35C-S04G**	**263**
BAW004M	**BAW M12MI-BLC35C-S04G**	**265**
BAW004H	**BAW M12ME-UAC70G-S04G**	**265**
BAW0056	**BAW M12MH-BLC70G-S04G**	**265**
BAW0011	**BAW M12ME-UAD50B-BP01**	**265**
BAW001T	**BAW M18ME-ICC50B-BP03**	**265**
BAW0026	**BAW M18ME-UAE50B-S04G-K**	**265**
BAW002F	**BAW M18MI-BLC50B-S04G**	**267**
BAW002H	**BAW M18MI-IAC50B-S04G**	**267**
BAW0029	**BAW M18MG-UAC16F-S04G-K**	**267**
BAW005Y	**BAW M30EE-ICD10B-S04G-L01**	**267**
BAW002W	**BAW M30ME-UAC10B-S04G**	**267**
BAW002Y	**BAW M30ME-UAC15F-S04G**	**267**
BAW005Z	**BAW R03KC-UAA40B-BP03-505**	**269**
BAW003E	**BAW Z01AC-UAD50B-DP03-K**	**269**
BAW003W	**BAW Z05AC-BLD50B-BP00,75-GS04**	**269**
BAW0034	**BAW R06AC-UAF20B-S49G**	**269**
BIP001U	**BIP AD2-T017-01-EB02**	**275**
BIP001W	**BIP CD2-T017-01-EB02**	**275**
BIP001Y	**BIP LD2-T017-01-EP00,5-S4**	**275**
BIP001K	**BIP AD2-T017-04-BP02**	**275**
BIP001L	**BIP CD2-T017-04-BP02**	**275**
BIP001M	**BIP LD2-T017-04-BP00,5-S4**	**275**
BIP000L	**BIP AD2-T030-02-S4**	**277**
BIP0002	**BIP AD2-B040-02-S4**	**277**
BIP0005	**BIP CD2-B040-02-S4**	**277**
BIP0004	**BIP LD2-T040-02-S4**	**277**
BIP000M	**BIP ED2-B048-03-S75**	**277**
BIP001J	**BIP LD2-T048-03-S75**	**277**
BIP000C	**BIP ED2-B070-03-S75**	**279**
BIP001H	**BIP LD2-T070-03-S75**	**279**
BIP000E	**BIP ED2-B103-03-S75**	**279**
BIP0014	**BIP LD2-T103-03-S75**	**279**
BIP000R	**BIP ED2-B133-03-S75**	**279**
BIP001F	**BIP LD2-T133-03-S75**	**279**
BIW1-A310	**BIW1-A310-M_ _ _ _-P1-S115**	**283**
BIW1-E310	**BIW1-E310-M_ _ _ _-P1-S115**	**283**
BIW1-C310	**BIW1-C310-M_ _ _ _-P1-S115**	**283**
BIW1-G310	**BIW1-G310-M_ _ _ _-P1-S115**	**283**
BCS001L	**BCS G06T4E1-PSM15C-EP02**	**287**
BCS001R	**BCS G06T4D2-PSM15C-S49G**	**287**
BCS0026	**BCS M08T4E1-PSM15C-EP02**	**287**
BCS002A	**BCS M08T4E2-PSM15C-S49G**	**287**
BCS002T	**BCS G10T4H-PSM40C-EP02**	**287**
BCS00PU	**BCS M12BBI1-PSC40D-EP02**	**287**
BCS00PJ	**BCS M12BBG2-PSC40D-S04K**	**289**
BCS00AU	**BCS M12TTG1-PSM40C-ET02**	**289**

BCS00R4	**BCS M12B4I1-PSC40D-EP02**	**289**
BCS00P0	**BCS M12B4G2-PSC40D-S04K**	**289**
BCS017H	**BCS M12K4G1-GSM50C-EP02**	**289**
BCS017K	**BCS M12K4D2-GSM50C-S04G**	**289**
BCS00NZ	**BCS M18BBN1-PSC80D-EP02**	**291**
BCS00M8	**BCS M18BBI3-PSC80D-S04K**	**291**
BCS00MF	**BCS M18B4I3-PSC80D-S04K**	**291**
BCS003A	**BCS D30T401-PSC15C-EP02**	**291**
BCS00NM	**BCS M30BBI1-PSC15D-EP02**	**291**
BCS00NA	**BCS M30BBI2-PSC15D-S04K**	**291**
BCS00M2	**BCS M18BBN1-NSC80D-EP02**	**291**
BCS003F	**BCS D30T401-NOC15C-EP02**	**291**
BCS00MR	**BCS M30B4I2-PSC15D-S04K**	**293**
BCS00UJ	**BCS G340OI2-PSC15D-S04K**	**293**
BCS004K	**BCS M30BBM3-PPC20C-EP02**	**293**
BCS004M	**BCS M30BBM2-PPM20C-S04G**	**293**
BCS004T	**BCS M30B4M2-PPM20C-S04G**	**293**
BCS003K	**BCS D500O02-YPC25C-EV02**	**293**
BCS012N	**BCS R08RRE-PIM80C-EP00,3-GS04**	**295**
BCS012T	**BCS R08RRE-PSM80C-EP00,3-GS75**	**295**
BCS012A	**BCS R08RRE-PSM80C-EP02**	**295**
BCS00U6	**BCS Q40BBAA-PSC20C-EP00,3-GS49**	**295**
BCS012U	**BCS R08RRE-POM80C-EP00,3-GS75**	**295**
BCS012C	**BCS R08RRE-POM80C-EP02**	**295**
BCS00U5	**BCS Q40BBAA-POC20C-EP00,3-GS49**	**295**
BCS00TR	**BCS Q40BBAA-GPC20C-EP02**	**295**
BCS012P	**BCS R08RRE-PIMFHC-EP00,3-GS04**	**301**
BCS012Z	**BCS R08RRE-PSMFHC-EP00,3-GS75**	**301**
BCS012H	**BCS R08RRE-PSMFHC-EP02**	**301**
BCS0130	**BCS R08RRE-POMFHC-EP00,3-GS75**	**301**
BCS012J	**BCS R08RRE-POMFHC-EP02**	**301**
BCS0084	**BCS D500O04-PPCFAC-EV02**	**301**
BCS0134	**BCS Q40BBAA-PSCFHC-EP00,3-GS49**	**303**
BCS0135	**BCS Q40BBAA-POCFHC-EP00,3-GS49**	**303**
BCS018A	**BCS Q40BBAA-PSICFHC-EP00,3-GS04**	**303**
BCS0133	**BCS Q40BBAA-GPCFHC-EP02**	**303**
BCS001Y	**BCS G06T4E1-PSM30G-EP02**	**307**
BCS0022	**BCS G06T4D2-PSM30G-S49G**	**307**
BCS002M	**BCS M08T4E2-PSM30G-S49G**	**307**
BCS00R0	**BCS M12BBG1-PSC80H-EP02**	**307**
BCS00PN	**BCS M12BBE2-PSC80H-S04K**	**307**
BCS006Z	**BCS M12TTG1-PSM80G-ET02**	**307**
BCS00R1	**BCS M12BBG1-POC80H-EP02**	**307**
BCS00PP	**BCS M12BBE2-POC80H-S04K**	**307**
BCS0070	**BCS M12TTG1-POM80G-ET02**	**307**
BCS00PC	**BCS M12B4G1-PSC80H-EP02**	**309**
BCS00P4	**BCS M12B4E2-PSC80H-S04K**	**309**
BCS008A	**BCS M18TTI2-PSCFAG-AT02**	**309**
BCS00LL	**BCS M18BBH1-PSC15H-EP02**	**309**
BCS00LM	**BCS M18BBG2-PSC15H-S04K**	**309**
BCS00LT	**BCS M18BBG2-POC15H-S04K**	**309**
BCS0179	**BCS M12K4D2-GSM80G-S04G**	**309**
BCS0073	**BCS M18TTI2-PSC15G-AT02**	**311**
BCS00ME	**BCS M18B4G2-PSC15H-S04K**	**311**
BCS006A	**BCS M18T4G2-PSC15G-S04G**	**311**
BCS0086	**BCS M30TTH2-PSCFAG-AT02**	**311**
BCS00NT	**BCS M30BBE1-PSC25H-EP02**	**311**
BCS007Y	**BCS M30BBM2-PPCFAG-S04G**	**311**
BCS00NH	**BCS M30BBE2-PSC25H-S04K**	**313**
BCS0077	**BCS M30TTH2-PSC30G-AT02**	**313**
BCS00N6	**BCS M30B4E1-PSC25H-EP02**	**313**
BCS00MY	**BCS M30B4E2-PSC25H-S04K**	**313**
BCS007F	**BCS M30BBM2-PPC30G-S04G**	**313**
BCS007L	**BCS M30T4M2-PPC30G-S04G**	**313**
BCS0105	**BCS S44KK01-PSCFAG-EP00,3-GS49**	**315**
BCS00ZL	**BCS S44KK01-PSCFNG-EP00,3-GS49**	**315**
BCS0109	**BCS S44KK02-PSCFAG-EP00,3-GS49**	**315**
BCS010A	**BCS S44KK02-POCFAG-EP00,3-GS49**	**315**
BCS010L	**BCS S44KK01-GPCFAG-EP02**	**315**
BCS010N	**BCS S44KK03-GPCFAG-EP02**	**315**
BCS010M	**BCS S44KK02-GPCFAG-EP02**	**315**
BCS011E	**BCS S04K501-PICFNG-S04G-T50**	**317**
BCS011F	**BCS S04K501-PSCFNG-S04G-T50**	**317**
BCS011H	**BCS S04K501-POCFNG-S04G-T50**	**317**
BCS018T	**BCS S30KK01-GPSFHF-EV05**	**317**
BCS018Z	**BCS S30KK02-GPSFHF-EV05**	**317**
BCS0010	**BCS G04T4D-XXS10C-EP02-GZ01-002**	**323**
BCS0012	**BCS G06T4B-XXS15C-EP02-GZ01-002**	**323**
BCS0013	**BCS G06T4B-XXS30G-EP02-GZ01-002**	**323**
BCS0016	**BCS G10T4B-XXS40C-EP02-GZ01-002**	**323**
BCS0017	**BCS G10T4C-XXS80G-EP02-GZ01-002**	**323**
BCS0011	**BCS M05T4C-XXS10C-EP02-GZ01-002**	**323**
BCS0014	**BCS M08T4C-XXS15C-EP02-GZ01-002**	**325**
BCS0015	**BCS M08T4C1-XXS30G-EP02-GZ01-002**	**325**
BCS0019	**BCS M12T4D1-XXS80G-EP02-GZ01-002**	**325**
BCS001A	**BCS D18T403-XXS30C-EP02-GZ01-002**	**325**
BCS001C	**BCS D18T404-XXS50C-EP02-GZ01-002**	**325**
BCS001F	**BCS D22T405-XXS10C-EP02-GZ01-002**	**325**
BCS001H	**BCS D22T408-XXS10C-EP02-GZ01-002**	**327**
BAE00LC	**BAE SA-CS-027-YI-BP00,3-GS04**	**331**
BAE00KH	**BAE SA-CS-025-YP-BP02**	**331**
BAE00L9	**BAE SA-CS-025-YP-BP00,3-GS04**	**331**
BAE00KJ	**BAE SA-CS-026-YP-BP02**	**331**
BAE00LA	**BAE SA-CS-026-YP-BP00,3-GS04**	**331**
BCS000K	**BCS M18KM3-UST80G-BV02**	**335**
BCS000J	**BCS M18KM3-UOT80G-BV02**	**335**
BCW0001	**BCW M18B4M1-ICM80C-DV02**	**335**
BCS013E	**BCS Z094401-XXS20B-SZ02-T07**	**335**
BCS00A3	**BCS S10T401-XXSFNC-SZ02-T07**	**335**
BCS00A1	**BCS M18T4H1-XXS10H-SZ02-T08**	**335**
BCS00W7	**BCS G20L4Q-PAC10C-EV03-D03**	**337**
BCS000W	**BCS M30KN2-UST15G-AV02**	**337**
BCS000U	**BCS M30KN2-UOT15G-AV02**	**337**
BCS00A2	**BCS M30T4G1-XXS20H-SZ02-T08**	**337**
BCS000Y	**BCS F01CP01-XXS10C-EP02-GZ01-002**	**337**
BCW0004	**BCW F03EA85-XXSFNC-EP00,3-GZ01**	**337**
BCS006H	**BCS S01T401-PSCFNG-KM16-T02**	**339**
BCS00A6	**BCS S03T401-PSCFNH-KM16-T02**	**339**
BCS006M	**BCS S02T401-PSCFNG-KM16-T02**	**339**
BCS006J	**BCS S01T401-POCFNG-KM16-T02**	**339**
BCS00A9	**BCS S03T401-NOCFNH-KM16-T02**	**339**
BOS026R	**BOS 21M-UUI-RP30-S4**	**345**
BOS01R8	**BOS 08E-PS-KD20-00,2-S49**	**347**
BOS01NN	**BOS 08E-PS-KD20-S49**	**347**
BOS01Y2	**BOS 12M-PS-ID10-S4**	**347**
BOS01TP	**BOS 12M-PS-RD10-S4**	**347**
BOS01TN	**BOS 12M-PS-RD11-S4**	**347**
BOS01TU	**BOS 12M-PS-RD12-S4**	**347**
BOS01C1	**BOS 18M-PS-RD20-S4**	**349**
BOS01E7	**BOS 18M-PS-RD21-S4**	**349**
BOS01FA	**BOS 18M-PS-RD23-S4**	**349**
BOS01EY	**BOS 18M-PA-ID20-S4**	**349**
BOS01NF	**BOS 18M-PA-LD20-S4**	**349**
BOS01CF	**BOS 18M-PA-RD20-S4**	**349**
BOS01CA	**BOS 18M-PA-RD21-S4**	**349**
BOS01UA	**BOS 18M-PI-RD30-S4**	**349**
BOS01NA	**BOS 18KF-PA-1XA-SA1-C-00,2**	**351**
BOS01KE	**BOS 18E-PA-RD20-S4**	**351**
BOS00LT	**BOS 18KW-PA-1PD-S4-C**	**351**
BOS00K9	**BOS 18KF-PA-1XA-S4-C**	**351**
BOS00K0	**BOS 18KF-PA-1PE-C-02**	**351**
BOS01J8	**BOS 18M-PUV-RD30-S4**	**351**
BOS01WC	**BOS Q08M-PS-LD20-S49**	**353**
BOS01RZ	**BOS Q08M-PS-KD20-00,2-S49**	**353**
BOS01RJ	**BOS Q08M-PS-KD20-S49**	**353**
BOS00JZ	**BOS 18KF-PA-1PD-S4-C**	**353**

BOS00K1	**BOS 18KF-PA-1PE-S4-C**	**353**
BOS00JP	**BOS 18KF-PA-1LOC-S4-C**	**353**
BOS021J	**BOS R01E-PS-KD20-00,2-S49**	**355**
BOS021K	**BOS R01E-PS-KD20-02**	**355**
BOS0123	**BOS 5K-PS-ID10-02**	**355**
BOS015J	**BOS 5K-PS-ID10-S49**	**355**
BOS0124	**BOS 5K-PS-ID10-S75**	**355**
BOS0127	**BOS 5K-PS-RD11-02**	**355**
BOS015N	**BOS 5K-PS-RD11-S49**	**357**
BOS0128	**BOS 5K-PS-RD11-S75**	**357**
BOS0031	**BOS 21M-PA-ID10-S4**	**357**
BOS0032	**BOS 21M-PA-LD10-S4**	**357**
BOS0033	**BOS 21M-PA-RD10-S4**	**357**
BOS01FM	**BOS 23K-PA-RD10-S4**	**359**
BOS027N	**BOS 21M-PAI-RD30-S4**	**359**
BOS0175	**BOS 23K-PU-LD20-S4**	**359**
BOS016Z	**BOS 23K-PU-RD10-S4**	**359**
BOS016Z	**BOS 23K-PU-RD10-S4**	**359**
BOS01CJ	**BOS 50K-PA-RD10-S4**	**361**
BOS01JJ	**BOS 50K-PI-RD11-S4**	**361**
BOS01JA	**BOS 50K-PU-RD11-S4**	**361**
BOS01K2	**BOS 64K-AA-ID10-TG**	**361**
BOS01H2	**BOS 08E-PS-KF20-00,2-S49**	**375**
BOS01H6	**BOS 08E-PS-KF20-S49**	**375**
BOS01H0	**BOS 08E-PS-KH22-00,2-S49**	**375**
BOS01H4	**BOS 08E-PS-KH22-S49**	**375**
BOS0246	**BOS 08E-PI-KH22-00,2-S49**	**375**
BOS0247	**BOS 08E-PI-KH22-S49**	**375**
BOS01UM	**BOS 12M-PA-RF10-S4**	**375**
BOS01ZT	**BOS 12M-PA-RF11-S4**	**37**
BOS002H	**BOS 18M-PS-LH22-S4**	**377**
BOS002K	**BOS 18M-PSV-LH22-S4**	**377**
BOS010J	**BOS 18MR-PS-1HA-E5-C-S4**	**377**
BOS01ZU	**BOS 12M-PA-RH12-S4**	**377**
BOS01C5	**BOS 18M-PA-LH23-S4**	**377**
BOS0081	**BOS 18MR-PA-1HA-S4-C**	**377**
BOS014W	**BOS 18M-PA-RH22-S4**	**377**
BOS01J4	**BOS 18M-PA-RH23-S4**	**377**
BOS00LH	**BOS 18KW-PA-1HA-S4-C**	**379**
BOS00JW	**BOS 18KF-PA-1N1R-S4-C**	**379**
BOS00JM	**BOS 18KF-PA-1HA-S4-C**	**379**
BOS0016	**BOS 18E-PS-1N2M-S4-D**	**379**
BOS021C	**BOS R020K-PS-RF10-00,2-S49**	**379**
BOS020M	**BOS R020K-PS-RF11-00,2-S49**	**379**
BOS020N	**BOS R020K-PS-RF11-00,2-S75**	**379**
BOS020K	**BOS R020K-PS-RF11-02**	**379**
BOS0217	**BOS R020K-PS-RF12-00,2-S49**	**381**
BOS0234	**BOS R020K-PS-RH12-00,2-S75**	**381**
BOS022C	**BOS R020K-PS-RH12-02**	**381**
BOS021U	**BOS R01E-PS-KF20-00,2-S49**	**381**
BOS021W	**BOS R01E-PS-KF20-02**	**381**
BOS022N	**BOS R01E-PS-KF21-02**	**381**
BOS0265	**BOS R01E-UI-KH22-00,2-S49**	**381**
BOS01JK	**BOS 5K-PU-LH12-S75**	**381**
BOS015U	**BOS 5K-PS-RH12-S49**	**383**
BOS012A	**BOS 5K-PS-RH12-S75**	**383**
BOS01Z9	**BOS 21M-PA-LH23-S4**	**383**
BOS01LE	**BOS 6K-PU-LH10-S75**	**383**
BOS01KW	**BOS 6K-PU-RH10-S49**	**383**
BOS01KY	**BOS 6K-PU-RH10-S75**	**383**
BOS01L3	**BOS 6K-PU-RH11-S75**	**383**
BOS011E	**BOS 5K-NS-RH12-02**	**383**
BOS026K	**BOS 21M-UUI-LH31-S4**	**385**
BOS0285	**BOS R254K-UUI-LH10-S4**	**385**
BOS01Z8	**BOS 21M-PA-RH22-S4**	**385**
BOS01FR	**BOS 23K-PA-LH10-S4**	**385**
BOS01FL	**BOS 23K-PA-RH10-S4**	**385**
BOS0036	**BOS 21M-PUS-RV13-S4**	**385**
BOS017C	**BOS 23K-PU-LH10-S4**	**385**
BOS017H	**BOS 23K-PU-LH20-S4**	**385**
BOS0178	**BOS 23K-PU-RH10-S4**	**385**
BOS01UW	**BOS 23K-UU-LH11-S92**	**385**
BOS018N	**BOS 50K-PS-RH12-S4**	**387**
BOS0156	**BOS 50K-PSV-RH12-S4**	**387**
BOS008A	**BOS 26K-PA-1IE-S4-C**	**387**
BOS008E	**BOS 26K-PA-1LHB-S4-C**	**387**
BOS008F	**BOS 26K-PA-1LHC-S4-C**	**387**
BOS0089	**BOS 26K-PA-1HC-S4-C**	**387**
BOS018P	**BOS 50K-PA-RH12-S4**	**387**
BOS01K1	**BOS 64K-AA-IH12-TG**	**387**
BOS01RK	**BOS 08E-PS-PR20-S49**	**397**
BOS01RL	**BOS 08E-PS-PR20-00,2-S49**	**397**
BOS01TT	**BOS 12M-PS-PR10-S4**	**397**
BOS01HK	**BOS 18M-PS-IR23-S4**	**397**
BOS01RM	**BOS 08E-PO-PR20-S49**	**397**
BOS01F0	**BOS 18M-PA-IR20-S4**	**397**
BOS01HR	**BOS 18M-PA-IR21-S4**	**397**
BOS01NE	**BOS 18M-PA-LR20-S4**	**397**
BOS01CE	**BOS 18M-PA-PR20-S4**	**397**
BOS01F8	**BOS 18M-PS-PR23-S4**	**399**
BOS01FJ	**BOS 18M-PA-PR20-S4S**	**399**
BOS01KL	**BOS 18E-PA-PR20-S4**	**399**
BOS023Y	**BOS 18E-PA-PR30-S4**	**399**
BOS01UE	**BOS 18M-PI-PR30-S4**	**399**
BOS00LM	**BOS 18KW-PA-1LQH-S4-C**	**401**
BOS00LW	**BOS 18KW-PA-1QC-S4-C**	**401**
BOS00LZ	**BOS 18KW-PA-1TB-S4-C**	**401**
BOS00K5	**BOS 18KF-PA-1RE-S4-C**	**401**
BOS00JT	**BOS 18KF-PA-1LQP-S4-C**	**401**
BOS00K3	**BOS 18KF-PA-1QD-S4-C**	**401**
BOS00K7	**BOS 18KF-PA-1TB-S4-C**	**401**
BOS01MU	**BOS Q08M-PS-LR20-00,2-S49**	**403**
BOS01MP	**BOS Q08M-PS-LR20-S49**	**403**
BOS01T9	**BOS Q08M-PS-PR20-00,2-S49**	**403**
BOS01T8	**BOS Q08M-PS-PR20-S49**	**403**
BOS020T	**BOS R020K-PS-PR11-00,2-S49**	**403**
BOS020U	**BOS R020K-PS-PR11-00,2-S75**	**403**
BOS020R	**BOS R020K-PS-PR11-02**	**403**
BOS021L	**BOS R01E-PS-KR20-00,2-S49**	**403**
BOS01MW	**BOS Q08M-PO-LR20-00,2-S49**	**403**
BOS021M	**BOS R01E-PS-KR20-02**	**405**
BOS012E	**BOS 5K-PS-RR10-S75**	**405**
BOS012C	**BOS 5K-PS-RR10-02**	**405**
BOS015E	**BOS 5K-PS-RR10-S49**	**405**
BOS0121	**BOS 5K-PO-RR10-S75**	**405**
BOS01JT	**BOS 5K-PU-LR10-02**	**405**
BOS01JW	**BOS 5K-PU-LR10-S75**	**405**
BOS01M4	**BOS 6K-PU-LK10-S75**	**405**
BOS01MH	**BOS 6K-PU-PR10-S49**	**405**
BOS00TL	**BOS 21M-PA-LR10-S4**	**407**
BOS00TN	**BOS 21M-PA-PK10-S4**	**407**
BOS00TR	**BOS 21M-PA-PR10-S4**	**407**
BOS00TU	**BOS 21M-PA-PT10-S4**	**407**
BOS01MJ	**BOS 6K-PU-PR10-S75**	**407**
BOS01L8	**BOS 6K-PU-PT10-S75**	**407**
BOS027M	**BOS 21M-PAI-PR30-S4**	**407**
BOS0286	**BOS R254K-UUI-PR10-S4**	**407**
BOS01NC	**BOS 23K-PA-LK10-S4**	**409**
BOS01FN	**BOS 23K-PA-RR10-S4**	**409**
BOS008L	**BOS 26K-PA-1LQP-S4-C**	**409**
BOS008M	**BOS 26K-PA-1QE-S4-C**	**409**
BOS01CR	**BOS 50K-PA-PR10-S4**	**409**
BOS016U	**BOS 23K-PU-LR10-S4**	**409**
BOS016P	**BOS 23K-PU-RR10-S4**	**409**
BOS01K3	**BOS 64K-AA-PR10-TG**	**409**
BOS01U3	**BOS 08E-PS-LE20-S49**	**423**

BOS020F	**BOS 08E-PS-KE20-S49**	**423**
BOS01TY	**BOS 12M-PS-RE10-S4**	**423**
BOS020A	**BOS 08E-PO-KE20-S49**	**423**
BOS00WF	**BOS 12M-PA-LE10-S4**	**423**
BOS01U8	**BOS 08E-X-LS20-S49**	**423**
BOS01Z5	**BOS 08E-X-KS20-S49**	**423**
BOS00WH	**BOS 12M-X-LS11-S4**	**423**
BOS00WJ	**BOS 12M-X-LS12-S4**	**423**
BOS01NJ	**BOS 18M-PA-LE20-S4**	**425**
BOS01J7	**BOS 18M-PUV-RE30-S4**	**425**
BOS01UC	**BOS 18M-PI-RE30-S4**	**425**
BOS00WL	**BOS 12M-XT-LS11-S4**	**425**
BOS00WN	**BOS 12M-XT-LS12-S4**	**425**
BOS01TW	**BOS 12M-X-RS10-S4**	**425**
BOS01NH	**BOS 18M-XT-LS20-S4**	**425**
BOS01CY	**BOS 18M-X-RS30-S4**	**425**
BOS01KM	**BOS 18E-PA-RE20-S4**	**427**
BOS023W	**BOS 18E-PA-RE30-S4**	**427**
BOS023H	**BOS 18E-PI-RE30-S4**	**427**
BOS01UF	**BOS 18M-XI-RS30-S4**	**427**
BOS01KT	**BOS 18E-X-RS20-S4**	**427**
BOS023U	**BOS 18E-X-RS30-S4**	**427**
BOS023J	**BOS 18E-XI-RS30-S4**	**427**
BOS00CH	**BLE 18KF-PA-1LT-S4-C**	**429**
BOS00CK	**BLE 18KF-PA-1PP-S4-C**	**429**
BOS00CT	**BLE 18KW-PA-1LT-S4-C**	**429**
BOS00CW	**BLE 18KW-PA-1PP-S4-C**	**429**
BOS00EW	**BLS 18KW-XX-1P-S4-L**	**429**
BOS00ET	**BLS 18KW-XX-1LT-S4-L**	**429**
BOS00EP	**BLS 18KF-XX-1P-S4-L**	**429**
BOS00EM	**BLS 18KF-XX-1LT-S4-L**	**429**
BOS01Y4	**BOS Q08M-PS-KE21-S49**	**431**
BOS01Y6	**BOS Q08M-PS-KE21-00,2-S49**	**431**
BOS0214	**BOS R020K-PS-RX11-00,2-S49**	**431**
BOS0211	**BOS R020K-PS-RX11-02**	**431**
BOS01Y7	**BOS Q08M-PO-KE21-S49**	**431**
BOS01YM	**BOS Q08M-X-KS21-00,2-S49**	**431**
BOS01YK	**BOS Q08M-X-KS21-S49**	**431**
BOS021N	**BOS R01E-PS-KE20-00,2-S49**	**433**
BOS021P	**BOS R01E-PS-KE20-02**	**433**
BOS0126	**BOS 5K-PS-IX10-S75**	**433**
BOS0125	**BOS 5K-PS-IX10-02**	**433**
BOS011R	**BOS 5K-PO-IX10-S75**	**433**
BOS01JP	**BOS 5K-PU-LX10-S75**	**433**
BOS021R	**BOS R01E-X-KS20-00,2-S49**	**433**
BOS021T	**BOS R01E-X-KS20-02**	**433**
BOS00WT	**BOS 21M-PA-IE10-S4**	**435**
BOS00WW	**BOS 21M-PA-LE10-S4**	**435**
BOS01LW	**BOS 6K-PU-LE10-S75**	**435**
BOS01LU	**BOS 6K-PU-LE10-S49**	**435**
BOS01M1	**BOS 6K-XT-LS10-S49**	**435**
BOS01M2	**BOS 6K-XT-LS10-S75**	**435**
BOS00WZ	**BOS 21M-XT-IS11-S4**	**435**
BOS00Y0	**BOS 21M-XT-LS11-S4**	**435**
BOS01FU	**BOS 23K-PA-LE10-S4**	**437**
BOS01FP	**BOS 23K-PA-RE10-S4**	**437**
BOS01CK	**BOS 50K-PA-RE10-S4**	**437**
BOS016L	**BOS 23K-PU-LE10-S4**	**437**
BOS016F	**BOS 23K-PU-RE10-S4**	**437**
BOS027R	**BOS 21M-PAI-RE30-S4**	**437**
BOS027P	**BOS 21M-XI-RS31-S4**	**437**
BOS016K	**BOS 23K-XT-LS11-S4**	**437**
BOS016E	**BOS 23K-XT-RS11-S4**	**437**
BOS01K4	**BOS 64K-AA-IE10-TG**	**439**
BOS01CN	**BOS 50K-XT-RS10-S4**	**439**
BOS01K5	**BOS 64K-AA-IS10-TG**	**439**
		439
		439
		439
		439
BGL0021	**BGL 5A-007-S49**	**451**
BGL0005	**BGL 10A-007-S49**	**451**
BGL000Y	**BGL 20A-007-S49**	**451**
BGL001F	**BGL 30A-007-S49**	**451**
BGL003J	**BGL 30A-011-S49**	**451**
BGL001T	**BGL 50A-007-S49**	**451**
BGL002L	**BGL 21-IR**	**451**
BGL002M	**BGL 21-RG**	**451**
BGL0029	**BGL 80A-007-S49**	**453**
BGL003L	**BGL 80A-011-S49**	**453**
BGL000F	**BGL 120A-007-S49**	**453**
BGL000N	**BGL 180A-007-S49**	**453**
BGL0014	**BGL 220A-007-S49**	**453**
BGL0019	**BGL 30A-003-S49**	**453**
BGL001M	**BGL 50A-003-S49**	**453**
BGL0025	**BGL 80A-003-S49**	**453**
BGL0009	**BGL 120A-003-S49**	**455**
BGL001Z	**BGL 5A-005-S49**	**455**
BGL0003	**BGL 10A-005-S49**	**455**
BGL000U	**BGL 20A-005-S49**	**455**
BGL001C	**BGL 30A-005-S49**	**455**
BGL001P	**BGL 50A-005-S49**	**455**
BGL0027	**BGL 80A-005-S49**	**455**
BGL000C	**BGL 120A-005-S49**	**455**
BGL000L	**BGL 180A-005-S49**	**457**
BGL0012	**BGL 220A-005-S49**	**457**
BGL001W	**BGL 5A-001-S49**	**457**
BGL0001	**BGL 10A-001-S49**	**457**
BGL000R	**BGL 20A-001-S49**	**457**
BGL0016	**BGL 30A-001-S49**	**457**
BGL001J	**BGL 50A-001-S49**	**457**
BGL0023	**BGL 80A-001-S49**	**457**
BGL0035	**BGL 30C-007-S4**	**459**
BGL003F	**BGL 50C-007-S4**	**459**
BGL0007	**BGL 120A-001-S49**	**459**
BGL000J	**BGL 180A-001-S49**	**459**
BGL0010	**BGL 220A-001-S49**	**459**
BGL0033	**BGL 30C-005-S4**	**459**
BGL0031	**BGL 30C-003-S4**	**459**
BGL0039	**BGL 50C-003-S4**	**459**
BGL002Z	**BGL 30C-001-S4**	**461**
BGL0037	**BGL 50C-001-S4**	**461**
BGL004M	**BGL 50F-007-00,2-S4**	**461**
BGL004P	**BGL 80F-007-00,2-S4**	**461**
BGL004L	**BGL 50F-001-00,2-S4**	**461**
BGL004N	**BGL 80F-001-00,2-S4**	**461**
BGL003C	**BGL 50C-005-S4**	**461**
BWL0009	**BWL 4040D-I011-S49**	**477**
BWL000L	**BWL 5454D-I011-S49**	**477**
BWL000Y	**BWL 6868D-I011-S49**	**477**
BWL0015	**BWL 9090D-I011-S49**	**477**
BWL0001	**BWL 110110D-I011-S49**	**477**
BWL000C	**BWL 4040D-L011-S49**	**477**
BWL000N	**BWL 5454D-L011-S49**	**477**
BWL0010	**BWL 6868D-L011-S49**	**477**
BWL0017	**BWL 9090D-L011-S49**	**479**
BWL0003	**BWL 110110D-L011-S49**	**479**
BWL000J	**BWL 4040D-R013-S49**	**479**
BWL000U	**BWL 5454D-R013-S49**	**479**
BWL001N	**BWL 6868D-R013-S49**	**479**
BWL001C	**BWL 9090D-R013-S49**	**479**
BWL0007	**BWL 110110D-R013-S49**	**479**
BWL000F	**BWL 4040D-R011-S49**	**479**
BWL000R	**BWL 5454D-R011-S49**	**481**
BWL0012	**BWL 6868D-R011-S49**	**481**

BWL0019	**BWL 9090D-R011-S49**	**481**
BWL0005	**BWL 110110D-R011-S49**	**481**
BOW001A	**BOW A-0408-PS-C-S49**	**489**
BOW001J	**BOW A-0808-PS-C-S49**	**489**
BOW0012	**BOW A-1208-PS-C-S49**	**489**
BOW002H	**BOW A-1216-PS-C-S49**	**489**
BOW002J	**BOW A-1616-PS-C-S49**	**489**
BOW0029	**BOW A-1216-NS-C-S49**	**489**
BOW002A	**BOW A-1616-NS-C-S49**	**489**
BOW002U	**BOW B-0404-DU-C-S75**	**489**
BOW002Y	**BOW B-0808-DU-C-S75**	**491**
BOW0031	**BOW B-1212-DU-C-S75**	**491**
BOW0034	**BOW B-1616-DU-C-S75**	**491**
BOW0037	**BOW B-2020-DU-C-S75**	**491**
BLG0001	**BLG 1-010-210-050-PV01-SX**	**499**
BLG0002	**BLG 1-010-210-070-PV01-SX**	**499**
BLG0003	**BLG 1-015-210-050-PV01-SX**	**499**
BLG0005	**BLG 1-030-210-070-PV01-SX**	**499**
BLA0001	**BLA 50A-001-S115**	**503**
BLA0003	**BLA 50A-002-S4**	**503**
BFS0001	**BFS 26K-PS-L01-S115**	**507**
BFS000M	**BFS 33M-GSI-F01-S75**	**507**
BFS000L	**BFS 33M-GSS-F01-PU-02**	**507**
BKT000H	**BKT 18KF-001-P-S4**	**511**
BKT0010	**BKT 6K-002-P-S75**	**511**
BKT000Y	**BKT 21M-002-P-S4**	**511**
BKT0003	**BKT 67M-003-U-S92**	**511**
BKT0001	**BKT 67M-001-U-S92**	**511**
BKT0005	**BKT 67M-005-U-S92**	**511**
BKT0006	**BKT 67M-006-U-S92**	**511**
BLT0009	**BLT 21M-001-P-S4**	**517**
BFB000C	**BFB M18M-011-P-S4**	**519**
BFB000E	**BFB M18M-012-P-S4**	**519**
BFB0006	**BFB 75K-002-P-S75**	**519**
BFB0003	**BFB 75K-001-P-02**	**519**
BFB0004	**BFB 75K-001-P-S75**	**519**
BFB0008	**BFB 75K-003-P-02**	**519**
BFB0009	**BFB M18M-001-P-S4**	**521**
BFB000A	**BFB M18M-002-P-S4**	**521**
BOS00JJ	**BOS 18KF-PA-1FR-S4-C**	**521**
BFO000F	**BFO 18A-LAA-MZG-20-0,5**	**525**
BFO000H	**BFO 18A-LAA-MZG-20-1**	**525**
BFO000J	**BFO 18A-LAA-MZG-20-1,5**	**525**
BFO000M	**BFO 18A-LAA-UZG-20-0,5**	**525**
BFO000N	**BFO 18A-LAA-UZG-20-1**	**525**
BFO001Z	**BFO 18A-LGG-MZG-10-0,5**	**525**
BFO0020	**BFO 18A-LGG-MZG-10-1**	**525**
BFO0023	**BFO 18A-LGG-SMG-10-0,5**	**525**
BFO0024	**BFO 18A-LGG-SMG-10-1**	**527**
BFO000U	**BFO 18A-LCC-SMG-20-0,5**	**527**
BFO000W	**BFO 18A-LCC-SMG-20-1**	**527**
BFO000Z	**BFO 18A-LCC-UZG-20-1**	**527**
BFO003Y	**BFO 18V-LCC-MZG-23-0,5**	**527**
BFO003Z	**BFO 18V-LCC-MZG-23-0,75**	**527**
BFO0042	**BFO 18V-LCC-SMG-23-0,5**	**527**
BFO001P	**BFO 18A-LFF-MZG-10-0,5**	**527**
BFO001R	**BFO 18A-LFF-MZG-10-1**	**529**
BFO001U	**BFO 18A-LFF-SMG-10-0,5**	**529**
BFO001W	**BFO 18A-LFF-SMG-10-1**	**529**
BFO0013	**BFO 18A-LEE-MZG-20-0,5**	**529**
BFO0014	**BFO 18A-LEE-MZG-20-1**	**529**
BFO0019	**BFO 18A-LEE-SMG-20-0,5**	**529**
BFO001A	**BFO 18A-LEE-SMG-20-1**	**529**
BFO001F	**BFO 18A-LEE-UZG-20-0,5**	**529**
BFO001H	**BFO 18A-LEE-UZG-20-1**	**531**
BFO0047	**BFO 18V-LDD-MZG-23-0,75**	**531**
BFO0049	**BFO 18V-LDD-MZG-23-2,0**	**531**
BFO004A	**BFO 18V-LDD-MZG-23-3**	**531**
BFO004C	**BFO 18V-LDD-SMG-23-0,5**	**531**
BFO004F	**BFO 18V-LDD-SMG-23-1**	**531**
BFO0026	**BFO 18A-XAA-MZG-30-0,5**	**531**
BFO0027	**BFO 18A-XAA-MZG-30-1**	**531**
BFO000H3	**BFO 18A-XAA-MZG-30-5**	**533**
BFO002F	**BFO 18A-XAA-SMG-30-0,5**	**533**
BFO002H	**BFO 18A-XAA-SMG-30-1**	**533**
BFO002M	**BFO 18A-XAA-UZG-30-0,5**	**533**
BFO002N	**BFO 18A-XAA-UZG-30-1**	**533**
BFO000H8	**BFO NU1-XB-05K-MZG-11-01**	**533**
BFO003R	**BFO 18A-XAG-MZG-15-0,5**	**533**
BFO003T	**BFO 18A-XAG-MZG-15-1**	**533**
BFO002U	**BFO 18A-XAC-SMG-30-0,5**	**535**
BFO002W	**BFO 18A-XAC-SMG-30-1**	**535**
BFO004M	**BFO 18V-XAC-MZG-30-0,5**	**535**
BFO004P	**BFO 18V-XAC-SMG-30-0,5**	**535**
BFO004R	**BFO 18V-XAC-SMG-30-1**	**535**
BFO003H	**BFO 18A-XAF-MZG-15-0,5**	**535**
BFO003J	**BFO 18A-XAF-MZG-15-1**	**535**
BFO003M	**BFO 18A-XAF-SMG-15-0,5**	**535**
BFO003N	**BFO 18A-XAF-SMG-15-1**	**537**
BFO0031	**BFO 18A-XAE-MZG-30-0,5**	**537**
BFO0032	**BFO 18A-XAE-MZG-30-1**	**537**
BFO0037	**BFO 18A-XAE-SMG-30-0,5**	**537**
BFO0038	**BFO 18A-XAE-SMG-30-1**	**537**
BFO003C	**BFO 18A-XAE-UZG-30-0,5**	**537**
BFO003E	**BFO 18A-XAE-UZG-30-1**	**537**
BFO004U	**BFO 18V-XAD-MZG-30-0,5**	**537**
BFO004Y	**BFO 18V-XAD-SMG-30-0,5**	**539**
BFO004Z	**BFO 18V-XAD-SMG-30-1**	**539**
BFO005Y	**BFO D22-LD-EAK-10-20**	**539**
BFO000C	**BFO N22-LA-FB-EAK-05-01**	**539**
BFO005R	**BFO D22-LA-RB-EAK-10-02**	**539**
BFO005M	**BFO D22-LA-KB-EAK-10-02**	**539**
BFO005U	**BFO D22-LAP-KB-EAK-15-02**	**539**
BFO005T	**BFO D22-LAH-KB-EAK-10-02**	**539**
BFO005W	**BFO D22-LAT-KB-EAK-10-02**	**541**
BFO005N	**BFO D22-LA-NB-EAK-10-02**	**541**
BFO0051	**BFO D10-LA-CB-EAK-05-02**	**541**
BFO000AY	**BFO D22-LAT-YB-EAK-10-0,5**	**541**
BFO005P	**BFO D22-LA-QB-PAK-05-02**	**541**
BFO000H6	**BFO D22-LAH-JD-EAK-10-02**	**541**
BFO0056	**BFO D13-LA-QB-EAK-05-02**	**541**
BFO000AW	**BFO D22-LAH-BK-EAK-10-02**	**541**
BFO000C8	**BFO D25 LA-HD-EAK-465-02**	**543**
BFO000C6	**BFO D10-LAH-CK-EAK-05-02**	**543**
BFO000C7	**BFO D10-LAH-DK-EAK-05-02**	**543**
BFO000AP	**BFO D22-LA-GD-EAK-52-02**	**543**
BFO0067	**BFO D25-LA-CD-EAK-110-02**	**543**
BFO000C5	**BFO D25-LA-ED-EAK-250-0,5**	**543**
BFO0068	**BFO D25-LA-ED-EAK-250-02**	**543**
BFO005K	**BFO D22-LA-BD-EAK-52-02**	**543**
BFO0059	**BFO D13-LG-10-EAK-30-02**	**545**
BFO0058	**BFO D13-LG-05-EAK-30-02**	**545**
BFO005E	**BFO D13-XB-RB-EAK-10-02**	**545**
BFO0054	**BFO D10-XA-RB-EAK-10-02**	**545**
BFO000C3	**BFO D10-XA-VB-EAK-10-02**	**545**
BFO0052	**BFO D10-XA-GB-EAK-10-02**	**545**
BFO005C	**BFO D13-XB-KB-EAK-10-02**	**545**
BFO0006	**BFO D22-XB-UB-EAK-15-02**	**545**
BFO000C9	**BFO D22-XB-UB-EAK-15-SA1-02**	**547**
BFO0055	**BFO D10-XAH-KB-EAK-10-02**	**547**
BFO0005	**BFO D22-XA-UB-EAK-20-02**	**547**
BFO0053	**BFO D10-XA-HB-EAK-10-02**	**547**
BFO0066	**BFO D22-XB-LB-EAK-15-02**	**547**
BFO000H4	**BFO D22-XB-LB-EAK-15-SA1-0,5**	**547**
BFO000FP	**BFO D22-XB-LB-EAK-15-SA1-01**	**547**
BFO000C4	**BFO D22-XB-LB-EAK-15-SA1-02**	**547**

BFO00FN	**BFO D22-XB-LB-EAK-15-SA1-05**	**549**
BFO0007	**BFO D22-XBF-LB-EAK-15-02**	**549**
BFO00H5	**BFO D22-XA-08B-EAK-26-02**	**549**
BFO0064	**BFO D22-XAP-LB-EAK-30-02**	**549**
BFO0003	**BFO D22-XA-DB-EAK-20-01**	**549**
BFO0063	**BFO D22-XAH-LB-EAK-20-02**	**549**
BFO0065	**BFO D22-XAT-LB-EAK-20-02**	**549**
BFO0004	**BFO D22-XA-SB-EAK-20-02**	**549**
BFO00AT	**BFO D13-XB-AB-EAK-10-01**	**551**
BFO005A	**BFO D13-XA-JB-EAK-20-02**	**551**
BFO0062	**BFO D22-XA-MB-PAK-10-02**	**551**
BFO005Z	**BFO D22-XA-CD-EAK-110-02**	**551**
BFO00AR	**BFO D13-XV-AK-EAK-50-02**	**551**
BFO0060	**BFO D22-XA-ED-EAK-250-02**	**551**
BOH00F5	**BOH AI-R028-034-01-S49F**	**593**
BOH00F6	**BOH AI-R051-035-01-S49F**	**593**
BOH00F7	**BOH AI-R073-036-01-S49F**	**593**
BOH00FF	**BOH AI-R180-037-02-S49F**	**593**
BOH00FH	**BOH AI-R264-038-02-S49F**	**593**
BOH00FJ	**BOH AI-R396-039-02-S49F**	**593**
BOH00FK	**BOH AI-R484-040-02-S49F**	**593**
BOH00FL	**BOH AI-R704-041-02-S49F**	**593**
BOH005J	**BOH TI-G02-001-01-S49F**	**595**
BOH000C	**BOH TK-G02-001-01-S49F**	**595**
BOH000A	**BOH TR-G02-001-01-S49F**	**595**
BOH000J	**BOH TJ-G02-001-01-S49F**	**595**
BOH000E	**BOH TK-M03-005-01-S49F**	**595**
BOH0061	**BOH TI-M03-001-01-S49F**	**595**
BOH000U	**BOH TK-M03-001-01-S49F**	**595**
BOH000T	**BOH TR-M03-001-01-S49F**	**595**
BOH00E6	**BOH TK-M04-020-01-S49F**	**597**
BOH00E5	**BOH TR-M04-020-01-S49F**	**597**
BOH0010	**BOH TR-G05-005-02-S49F**	**597**
BOH000F	**BOH TK-M05-006-01-S49F**	**597**
BOH0065	**BOH TI-M05-003-01-S49F**	**597**
BOH0013	**BOH TK-M05-003-01-S49F**	**597**
BOH000Y	**BOH TR-M05-003-01-S49F**	**597**
BOH006H	**BOH TI-M06-002-01-S49F**	**597**
BOH000K	**BOH TR-M06-002-02-S49F**	**599**
BOH000H	**BOH TL-M06-007-02-S49F**	**599**
BOH0012	**BOH TK-M08-004-02-S49F**	**599**
BOH006P	**BOH TI-Q06-001-01-S49F**	**599**
BOH000P	**BOH TK-Q06-001-01-S49F**	**599**
BOH000N	**BOH TR-Q06-001-01-S49F**	**599**
BOH000R	**BOH TJ-Q06-001-01-S49F**	**599**
BOH00EL	**BOH AI-R034-025-01-S49F**	**599**
BOH001Z	**BOH TK-R003-007-01-S49F**	**601**
BOH0020	**BOH TR-R010-008-02-S49F**	**601**
BOH007A	**BOH TJ-R010-008-01-S49F**	**601**
BOH002E	**BOH TK-R018-002-01-S49F**	**601**
BOH002C	**BOH TK-R018-001-01-S49F**	**601**
BOH002H	**BOH TK-R027-004-01-S49F**	**601**
BOH002F	**BOH TK-R027-003-01-S49F**	**601**
BOH0024	**BOH AR-R113-010-01-S49F**	**601**
BOH002M	**BOH AI-R165-011-01-S49F**	**603**
BOH0002	**BOH DI-G02-001-01-S49F**	**603**
BOH0003	**BOH DR-G02-001-01-S49F**	**603**
BOH0004	**BOH DI-M03-001-01-S49F**	**603**
BOH0009	**BOH DR-M03-001-01-S49F**	**603**
BOH003C	**BOH DI-G05-002-01-S49F**	**603**
BOH0006	**BOH DK-G05-002-01-S49F**	**603**
BOH0005	**BOH DR-G05-002-01-S49F**	**603**
BOH003M	**BOH DI-M06-002-01-S49F**	**605**
BOH0008	**BOH DK-M06-002-01-S49F**	**605**
BOH0007	**BOH DR-M06-002-01-S49F**	**605**
BOH003W	**BOH DI-Q06-001-01-S49F**	**605**
BOH000M	**BOH DK-Q06-001-01-S49F**	**605**
BOH000L	**BOH DR-Q06-001-01-S49F**	**605**
BOH002K	**BOH DK-R002-006-01-S49F**	**605**
BOH0028	**BOH DK-R018-002-01-S49F**	**605**
BOH0027	**BOH DK-R018-001-01-S49F**	**607**
BOH002A	**BOH DK-R027-004-01-S49F**	**607**
BOH0029	**BOH DK-R027-003-01-S49F**	**607**
BOH002L	**BOH FK-Z001-001-01-S49F**	**607**
BOH001M	**BOH AR-F40-001-01-S49F**	**607**
BOH001N	**BOH AR-F40-002-01-S49F**	**607**
BOH001P	**BOH AR-F80-003-01-S49F**	**607**
BOH001R	**BOH TR-T16-001-01-S49F**	**607**
BOH001Y	**BOH TR-T32-001-01-S49F**	**609**
BOH001U	**BOH TJ-T32-001-01-S49F**	**609**
BOH0019	**BOH TR-T48-001-01-S49F**	**609**
BOH0015	**BOH TJ-T48-001-01-S49F**	**609**
BOH001A	**BOH TR-T64-001-01-S49F**	**609**
BOH0016	**BOH TJ-T64-001-01-S49F**	**609**
BAE00NE	**BAE SA-OH-035-PP-DV02**	**617**
BAE00NF	**BAE SA-OH-035-PP-S75G**	**617**
BAE00PR	**BAE SA-OH-035-NP-DV02**	**617**
BAE00PT	**BAE SA-OH-035-NP-S75G**	**617**
BAE00NH	**BAE SA-OH-038-UA-DV02**	**617**
BAE00N6	**BAE SA-OH-038-UA-S75G**	**617**
BAE00N4	**BAE SA-OH-038-IC-DV02**	**617**
BAE00N5	**BAE SA-OH-038-IC-S75G**	**617**
BAE00YC	**BAE SA-OH-050-PP-DV02**	**619**
BAE00Y7	**BAE SA-OH-050-PP-S75G**	**619**
BAE00NJ	**BAE SA-OH-040-PP-DV02**	**619**
BAE00N7	**BAE SA-OH-040-PP-S75G**	**619**
BOD001L	**BOD 6K-RA02-S75**	**623**
BOD001R	**BOD 6K-RA03-S75**	**623**
BOD001Z	**BOD 6K-RA04-S75**	**623**
BOD002L	**BOD 21M-LBI05-S4**	**623**
BOD000L	**BOD 21M-LA01-S92**	**623**
BOD000M	**BOD 21M-LA02-S92**	**623**
BOD000N	**BOD 21M-LA04-S92**	**623**
BOD000P	**BOD 21M-LB01-S92**	**623**
BOD000R	**BOD 21M-LB02-S92**	**625**
BOD000T	**BOD 21M-LB04-S92**	**625**
BOD0020	**BOD 23K-LI01-S4**	**625**
BOD001N	**BOD 23K-LA01-S92**	**625**
BOD001P	**BOD 23K-LB01-S92**	**625**
BOD002M	**BOD 24K-LPI07-S4**	**625**
BOD002N	**BOD 24K-LPI08-S4**	**625**
BOD0002	**BOD 26K-LA01-S4-C**	**625**
BOD0004	**BOD 26K-LA02-S4-C**	**627**
BOD0005	**BOD 26K-LB04-S115-C**	**627**
BOD0006	**BOD 26K-LB05-S115-C**	**627**
BOD0007	**BOD 26K-LB06-S92-C**	**627**
BOD0008	**BOD 26K-LB07-S92-C**	**627**
BOD000C	**BOD 26K-LBR04-S115-C**	**627**
BOD000E	**BOD 26K-LBR05-S115-C**	**627**
BOD001Y	**BOD 37M-LPR02-S115**	**627**
BOD001U	**BOD 37M-LA01-S92**	**629**
BOD001W	**BOD 37M-LB01-S92**	**629**
BOD001J	**BOD 66M-LA12-S92**	**629**
BOD001E	**BOD 66M-LA14-S92**	**629**
BOD001H	**BOD 66M-RA11-S92**	**629**
BOD001K	**BOD 66M-LB12-S92**	**629**
BOD001F	**BOD 66M-LB14-S92**	**629**
BOD001C	**BOD 66M-RB11-S92**	**629**
BMP0007	**BMP 01-EL1PP21A-0032-00-P00,5-S75**	**641**
BMP000N	**BMP 01-EL1PP21A-0096-00-P00,5-S4**	**641**
BMP0009	**BMP 01-EL1PP21A-0160-00-P02**	**641**
BMP000K	**BMP 01-EL1PP21A-0256-00-P00,5-S75**	**641**
BMF00N2	**BMF 415KW-HAKKI-W-5-S0-02**	**645**
BMF00N3	**BMF 415KW-HAPS-W-5-S0-02**	**645**
BMF00NL	**BMF 415KW-HAKKI-W-5-P0-S4-00,3**	**645**
BMF00MU	**BMF 415KW-HAKKI-W-5-P3-S75-00,3**	**645**

BMF00NM	**BMF 415KW-HAPS-W-5-P0-S4-00,3**	**645**
BMF00MW	**BMF 415KW-HAPS-W-5-P3-S49-00,3**	**645**
BMF00L6	**BMF 235K-H-PS-C-A2-S75-00,3**	**645**
BMF00C6	**BMF 235K-PO-C-2A-SA2-S49-00,3**	**645**
BMF00C5	**BMF 235K-PS-C-2A-SA2-S4-00,3**	**647**
BMF00C4	**BMF 235K-PS-C-2A-SA2-S49-00,3**	**647**
BMF00C9	**BMF 235K-PS-C-2A-SA95-S4-00,3**	**647**
BMF00CA	**BMF 235K-PS-C-2A-SA95-S75-00,3**	**647**
BMF00AR	**BMF 235K-PS-C-2A-PU-02**	**647**
BMF00M5	**BMF 405KF-PS-C-2A-S4-00,3**	**647**
BMF00LW	**BMF 405KF-PO-C-2A-EY-02**	**647**
BMF00E4	**BMF 255K-N-06-EEX**	**647**
BMF00JH	**BMF 203K-H-PS-C-A2-S75-00,3**	**651**
BMF00JF	**BMF 203K-H-PS-C-A2-PU-02**	**651**
BMF00HF	**BMF 233K-PS-C-2A-SA2-S49-00,3**	**651**
BMF00J2	**BMF 233K-PS-C-2A-SA95-S4-00,3**	**651**
BMF00J1	**BMF 233K-PS-C-2A-SA95-S75-00,3**	**651**
BMF00HA	**BMF 233K-PS-C-2A-PU-02**	**651**
BMF00ER	**BMF 243K-PS-C-2A-SA2-S4-00,3**	**653**
BMF00EL	**BMF 243K-PS-C-2A-SA2-S49-00,3**	**653**
BMF00F9	**BMF 243K-PS-C-2A-SA95-S4-00,3**	**653**
BMF00ET	**BMF 243K-PS-C-2A-SA95-S75-00,3**	**653**
BMF00EF	**BMF 243K-PS-C-2A-PU-02**	**653**
BMF001L	**BMF 103K-PS-C-2A-SA2-S49-00,3**	**657**
BMF001P	**BMF 103K-PS-C-2A-SA7-S49-00,3**	**657**
BMF001R	**BMF 103K-PS-C-2A-SA95-S75-00,3**	**657**
BMF001E	**BMF 103K-PS-C-2A-PU-02**	**657**
BMF0043	**BMF 303K-PS-C-2A-SA2-S49-00,3**	**657**
BMF004C	**BMF 303K-PS-C-2A-SA7-S49-00,3**	**657**
BMF004E	**BMF 303K-PS-C-2A-SA95-S4-00,3**	**657**
BMF004F	**BMF 303K-PS-C-2A-SA95-S75-00,3**	**657**
BMF003U	**BMF 303K-PS-C-2A-PU-02**	**659**
BMF008F	**BMF 305M-PS-C-2-S49**	**659**
BMF005L	**BMF 305K-PS-C-2-SA2-S49-00,3**	**659**
BMF0056	**BMF 305K-PS-C-2-PU-02**	**659**
BMF0087	**BMF 32M-PS-C-2-S4**	**659**
BMF0088	**BMF 32M-PS-C-2-S49**	**659**
BMF008A	**BMF 32M-PS-W-2-S4**	**659**
BMF0029	**BMF 21K-PS-C-2-S49**	**663**
BMF0027	**BMF 21K-PS-C-2-PU-03**	**663**
BMF001R	**BMF 103K-PS-C-2A-SA95-S75-00,3**	**667**
BMF004E	**BMF 303K-PS-C-2A-SA95-S4-00,3**	**667**
BMF004F	**BMF 303K-PS-C-2A-SA95-S75-00,3**	**667**
BMF00J2	**BMF 233K-PS-C-2A-SA95-S4-00,3**	**667**
BMF00J1	**BMF 233K-PS-C-2A-SA95-S75-00,3**	**667**
BMF00F9	**BMF 243K-PS-C-2A-SA95-S4-00,3**	**667**
BMF00ET	**BMF 243K-PS-C-2A-SA95-S75-00,3**	**669**
BMF00C9	**BMF 235K-PS-C-2A-SA95-S4-00,3**	**669**
BMF00CA	**BMF 235K-PS-C-2A-SA95-S75-00,3**	**669**
BMF000L	**BMF 07M-PS-D-2-SA2-S49-00,3**	**677**
BMF000P	**BMF 08M-PS-C-2-KPU-02**	**677**
BES01FF	**BES 516-346-H2-Y-S49**	**707**
BES01FC	**BES 516-346-H2-Y**	**707**
BES01EW	**BES 516-341-H2-Y-S4**	**707**
BES01EU	**BES 516-341-H2-Y**	**707**
BES017M	**BES 516-161-H3-L**	**707**
BES01ZK	**BES 516-344-H2-Y**	**707**
BES01ET	**BES 516-340-H2-Y**	**707**

Global Project Management

WE ARE EVERYWHERE FOR YOU

Always where you need us
Wherever you are doing business, we will support you locally. We work closely with machine and systems builders, systems integrators, planning offices and maintenance engineers. Balluff has constructed a global network for you consisting of technical consulting, sales and after-sales services.

Project manuals and approval lists
We provide you with custom tailored product data for smooth running of your projects. You receive project-specific manuals and approval lists. And personal contacts from Balluff are at your side throughout the entire project.

Individual services
If our services need to be even more personalized, we make this possible as well: with individual e-catalogs, application-specific product modifications, integrated software and system solutions and comprehensive logistics concepts.

Questions? Contact us. We are happy to help.

innovating automation

innovating automation

Balluff

WE OPEN UP NEW PERSPECTIVES

Balluff is a leading provider of high-value sensor, identification and image processing solutions including networking technology and software for any automation requirement. Family owned for more than 100 years, Balluff currently employs around 3600 persons in 38 subsidiaries with sales, production and development facilities around the world to ensure your success. Together with our representatives we guarantee the highest quality standards in 68 countries so that you always get the best.

We perform top services for innovative solutions that increase your competitive ability. We deliver a consistent digital focus, manufacturing expertise, and high personal dedication.

We adhere to our motto "Innovating Automation" as pacesetters of automation, refiners and new developers, and technological trailblazers. In open exchange with associations, universities and research institutes as well as in close contact with our customers, we create new industrial sector solutions for automation. As a future-looking company we keep our eye not only on the traditional areas of automation, but also devote ourselves to the development of holistic applications for an increasingly digital and networked world.

We have the future firmly in view in everything we do. With a sophisticated environmental management system, we protect the environment and handle our resources with care. This also creates for you the best prerequisites for sustained action.

You can always rely on us, our products and our adherence to delivery dates and schedule — All in the name of mutually beneficial partnership.

Headquarters
Balluff GmbH
Schurwaldstrasse 9
73765 Neuhausen a. d. F.
Germany
Phone +49 7158 173-0
Fax +49 7158 5010
balluff@balluff.de

CONTACT OUR WORLDWIDE SUBSIDIARIES

Doc.-No. 942496 EN · E21 · Subject to changes. Replaces H20