BALLUFF

PRODUCTS FOR EFFICIENT AUTOMATION

Products and Services

innovating automation

Safety, Industrial Networking,
Software and System Solutions, Power Supplies

4

Innovative solutions

TO MEET YOUR AUTOMATION NEEDS

Plastics, Rubber and Tires
Mobility
Packaging, Foods and Beverages
Energy Generation

INNOVATIVE SOLUTIONS FOR ANY REQUIREMENT

To give you an overview of our range of offerings we have condensed our product portfolio into five volumes. This overview provides a list of topics contained in each volume.

1

Sensors 1
- Inductive Sensors
- Capacitive Sensors
- Photoelectric Sensors
- Magnetic Sensors
- Mechanical Cam Switches

2

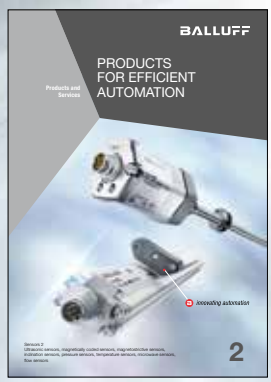

Sensors 2
- Ultrasonic Sensors
- Magnetically Coded Sensors
- Magnetostrictive Sensors
- Inclination Sensors
- Pressure Sensors
- Temperature Sensors
- Flow Sensors
- Condition Monitoring Sensors

3 — 4 — 5

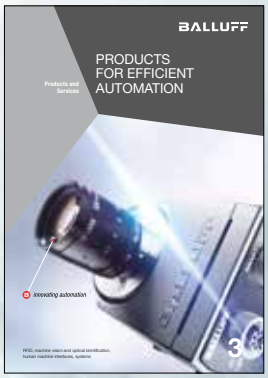

- RFID
- Machine Vision and Optical Identification
- Human Machine Interfaces

- Safety
- Industrial Networking
- Software and System Solutions
- Power Supplies

- Connectivity
- Accessories

Do you need more details? Our Product Finder at www.balluff.com provides you with product-specific information, including technical drawings, data sheets, user guides and more for each individual product. All items are available for download.

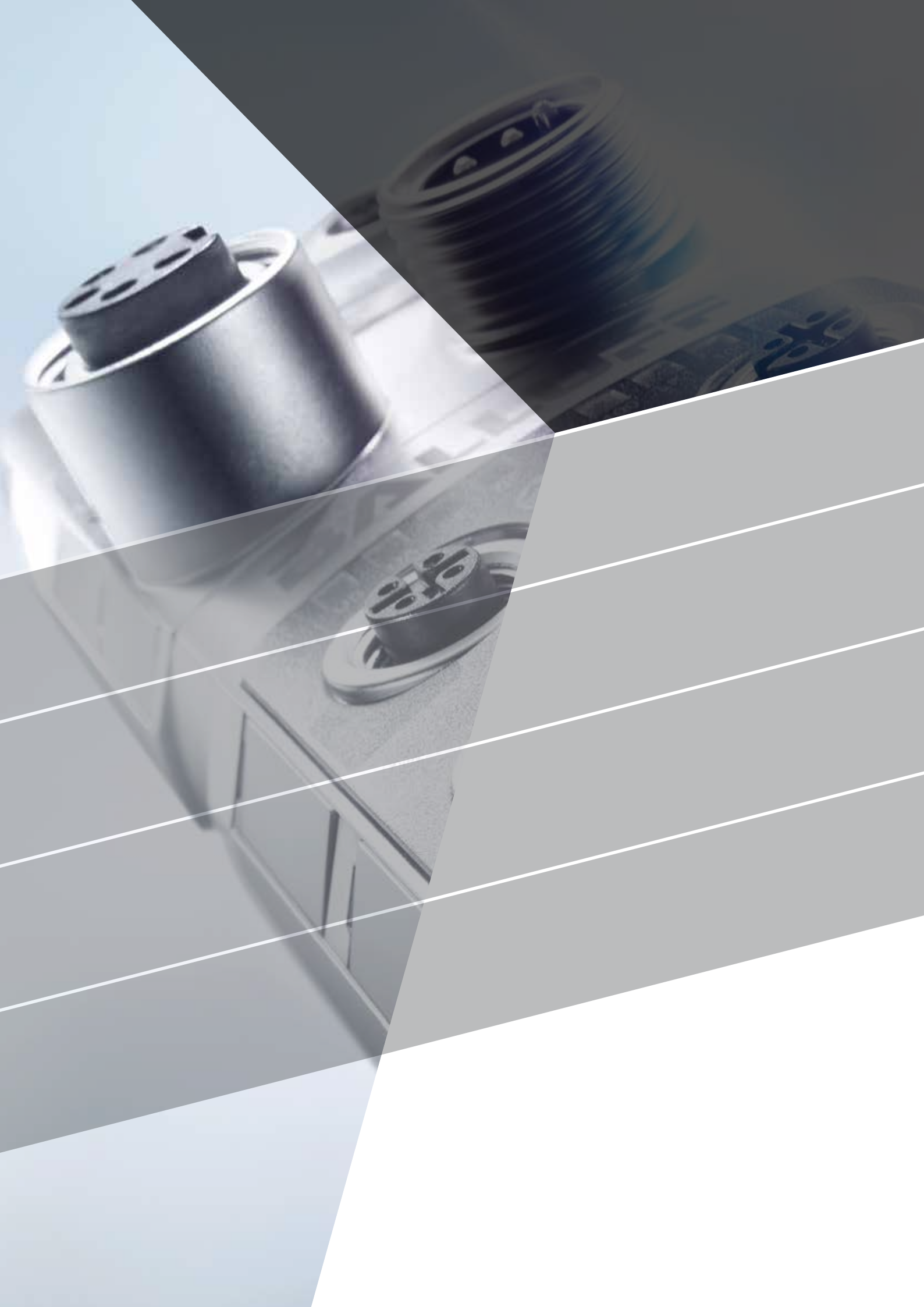

CONTENTS

8 SAFETY

12 Safe I/O Modules

30 INDUSTRIAL NETWORKING

34 Network Blocks
74 Switches
80 I/O Modules
122 Inductive Couplers

150 SOFTWARE UND SYSTEMLÖSUNGEN

152 Balluff Engineering Tool
154 Injection molding tool management with Mold-ID
158 Tool parameter transfer with Easy Tool-ID

158 POWER SUPPLIES

162 Heartbeat® Power Supply Units
166 Heartbeat® Power Supplies with IO-Link Interface
172 Power Supplies for the Control Cabinet

ALPHANUMERIC INDEX 182
GLOBAL PROJECT MANAGEMENT 186
ABOUT BALLUFF 188

Machine safety with Balluff quality

SAFETY.

innovating automation

Automation requires safety. And safety is based on reliability. Balluff quality guarantees great reliability with a variety of solutions that make machines and equipment dependable and safe. Our safety sensors together with safe controller technology enable innovative concepts for your machine safety – all while maintaining consistent quality that lasts for years. The Balluff safety concept for automation includes a continually increasing number or products and components that contribute to minimizing the risk to man and machine while safely processing the information. These components can easily be integrated into the machine controllers.

Your Balluff solutions

- Safe I/O modules

Safely transport signals

SAFE I/O MODULES

The safe I/O modules from Balluff combine safety and automation technology using IO-Link. They provide both sensor and actuator signals as well as safety-relevant information. The best part: all you need for the safety concept in your plant is an infrastructure for implementing industrial safety in your automation processes. The universal IO-Link interface makes integrating industrial safety technology easier than ever.

At Balluff the core of Safety over IO-Link is the Safety Hub with Profisafe for Profinet. Safety switches and sensors, opto-electronic protective devices or safety command devices are quick and easy to incorporate. All you need is standard M12 cables for connecting virtually any safe field device.

Safe communication with the controller level is via Profisafe for Profinet. Together with our safety components the result is an all-round safe system on which you can rely.

The most important benefits

- For safety applications up to PLe/SIL3
- Reduce IP addresses
- Standardized wiring concept with M12 cables, safe interlocking devices can be directly connected
- Simple device replacement
- Nearly any safety device can be connected

IO-Link blocks for safety applications 12
Profisafe over IO-Link 16
Basics and glossary 20

	BNI0033 BNI IOL-252-000-Z013	BNI003W BNI IOL-252-S01-Z013	
Performance Level	—	—	
Safety category (EN ISO 13849-1)	—	—	
SIL (IEC 61508)	—	—	
SIL CL (EN 62061)	—	—	
Response time max.	—	—	
Approval/Conformity	CE	CE	
Current sum US, sensor	—	—	
Current sum UA, actuator	9.0 A	9.0 A	
Digital inputs	—	—	
Digital outputs	8x PNP	8x PNP	
Interface	IO-Link 1.0	IO-Link 1.0	
Connection slots	—	—	
Dimension	68 x 32.4 x 181.5 mm	68 x 32.4 x 181.5 mm	
Ambient temperature	-5...70 °C	-5...70 °C	
Protection degree	IP67	IP67	
Housing material	Zinc, die-cast	Zinc, die-cast	
Productview	Page 14	Page 14	

	BNI0034 BNI IOL-256-000-Z013	BNI003Y BNI IOL-256-S01-Z013	BNI00CL BNI IOL-355-S02-Z013	
	—	—	d	
	—	—	3	
	—	—	2	
	—	—	2	
	—	—	1 ms	
	CE	CE	CE, TÜV, IO-Link, cULus, UL-File E319845, VOL.1 SEC.1	
	—	—	9 A	
	9.0 A	9.0 A	9 A	
	—	—	8x PNP, Type3	
	16x PNP	16x PNP	8x yes	
	IO-Link 1.0	IO-Link 1.0	IO-Link 1.1	
	—	—	8x M12x1-Female, 5-pole, A-coded	
	68 x 32.4 x 181.5 mm	68 x 32.4 x 181.5 mm	68 x 32.4 x 181.5 mm	
	-5...70 °C	-5...70 °C	-5...55 °C	
	IP67	IP67	IP67	
	Zinc, die-cast	Zinc, die-cast	Die-cast zinc	
	Page 14	Page 14	Page 15	

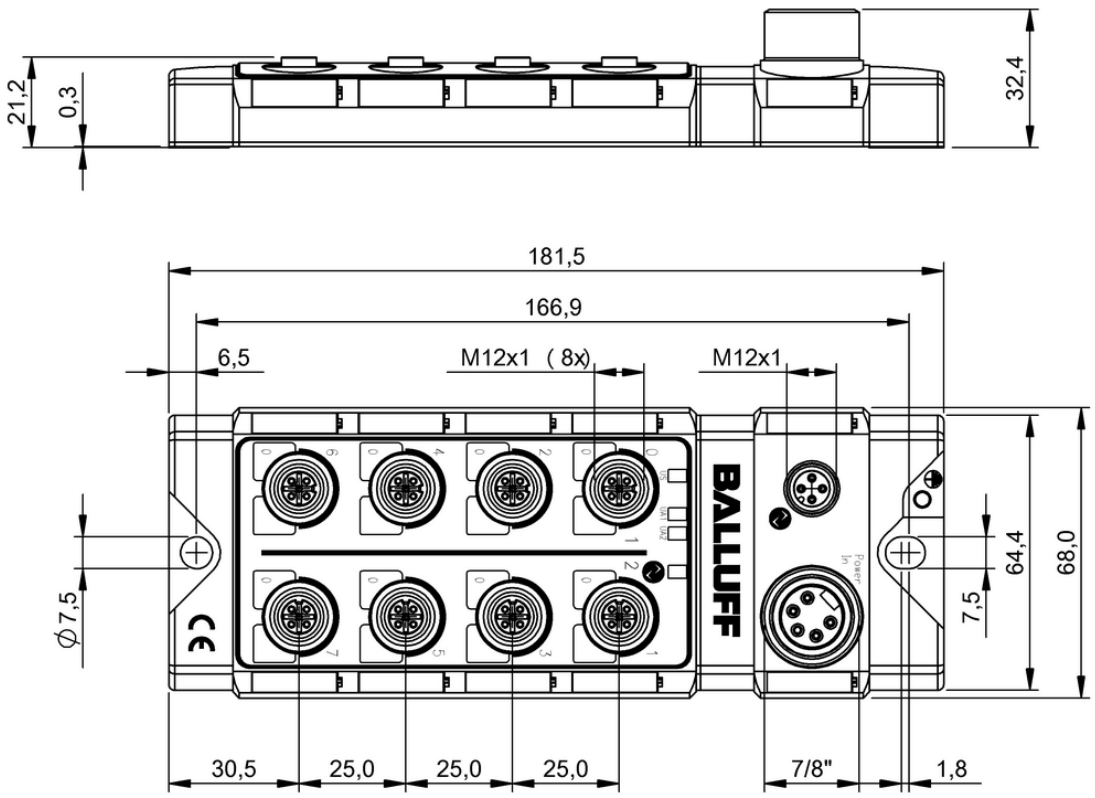

BNI0033, BNI003W

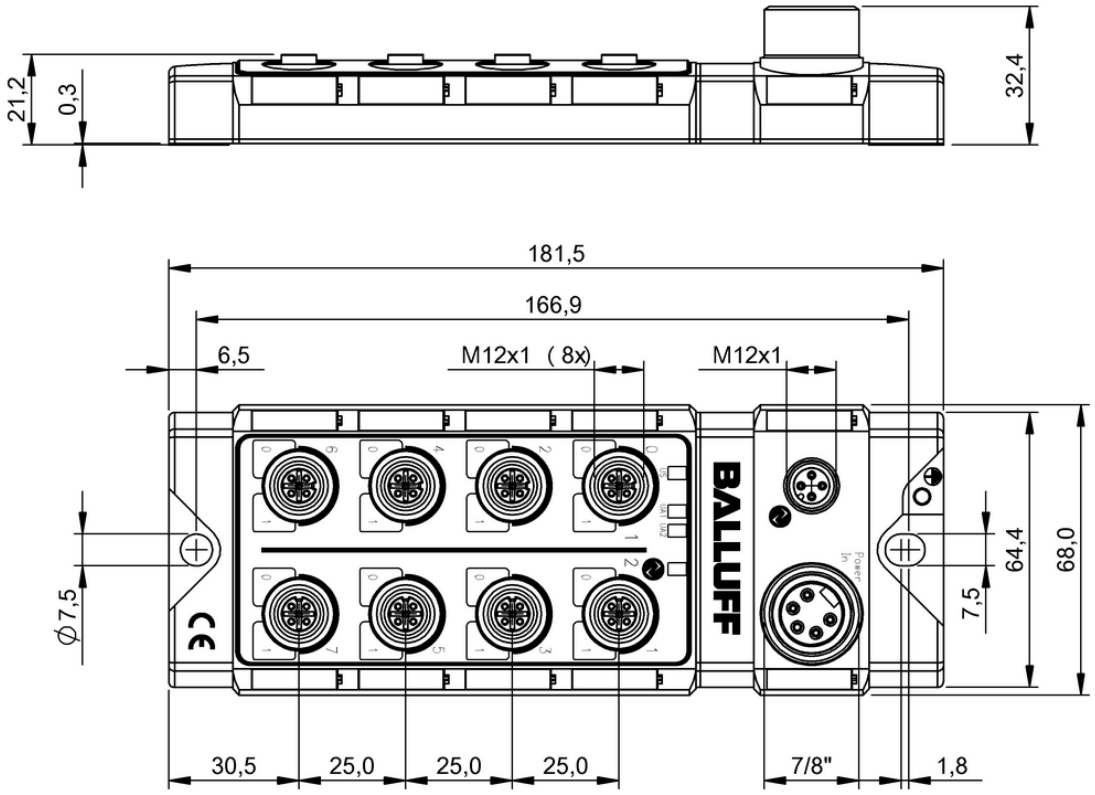

BNI0034, BNI003Y

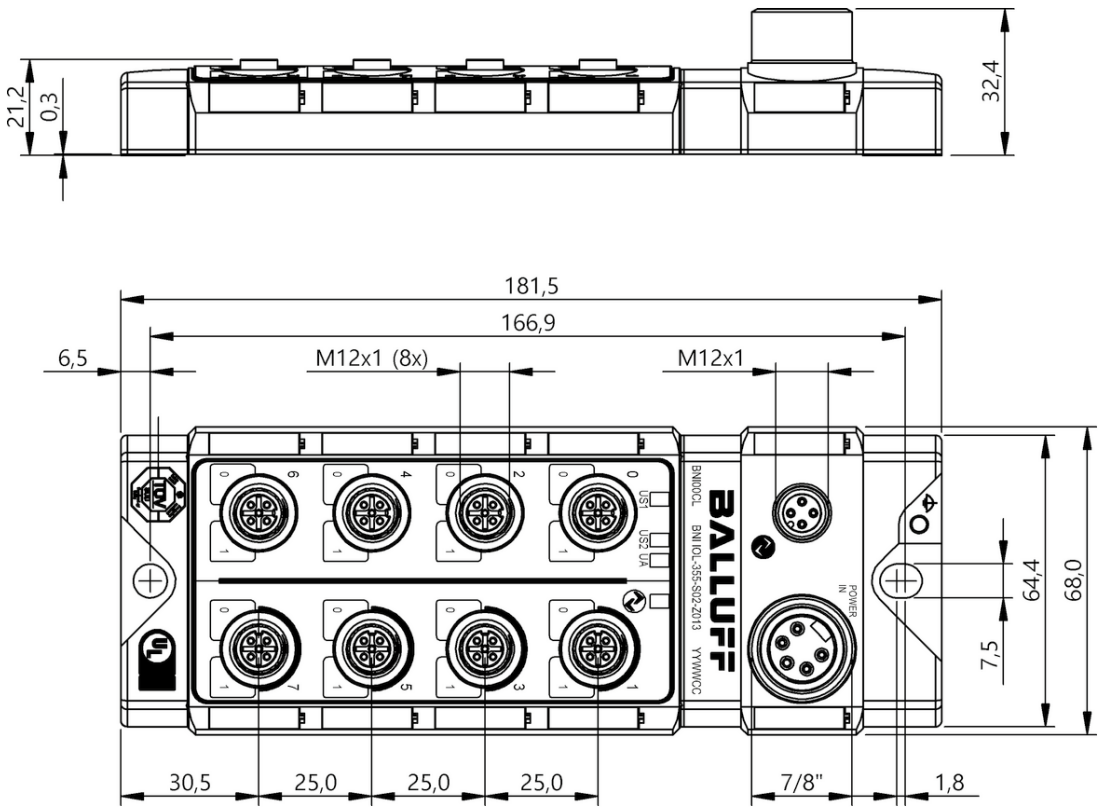
21,2
0,3
32,4
181,5
166,9
6,5
M12x1 (8x)
M12x1
64,4
68,0
7,5
30,5
25,0
25,0
25,0
7/8"
1,8
BALLUFF
BNI00CL
BNI IOL-355-S02-Z013
YYWWCC
US1
US2
UA
POWER IN

BNI00CL

Performance Level	
Safety category (EN ISO 13849-1)	
SIL (IEC 61508)	
SIL CL (EN 62061)	
Response time max.	
Approval/Conformity	
Number of safe inputs	
Number of safe inputs	
Current sum US, sensor	
Current sum UA, actuator	
Digital inputs	
Interface	
Connection slots	
Dimension	
Ambient temperature	
Protection degree	
Housing material	
Productview	

	BNI0098 BNI IOF-329-P02-Z038
	e
	4
	3
	3
	20 ms
	CE, TÜV, cULus, UL-File E319845, VOL.1 SEC.1
	12
	2
	4.8 A
	8 A
	12x PNP, Type 3
	PROFIsafe over IO-Link
	2x M12x1-Female, 8-pole, A-coded 6x M12x1-Female, 5-pole, A-coded
	68 x 32.4 x 181.5 mm
	-5...55 °C
	IP67
	Die-cast zinc
	Page 18

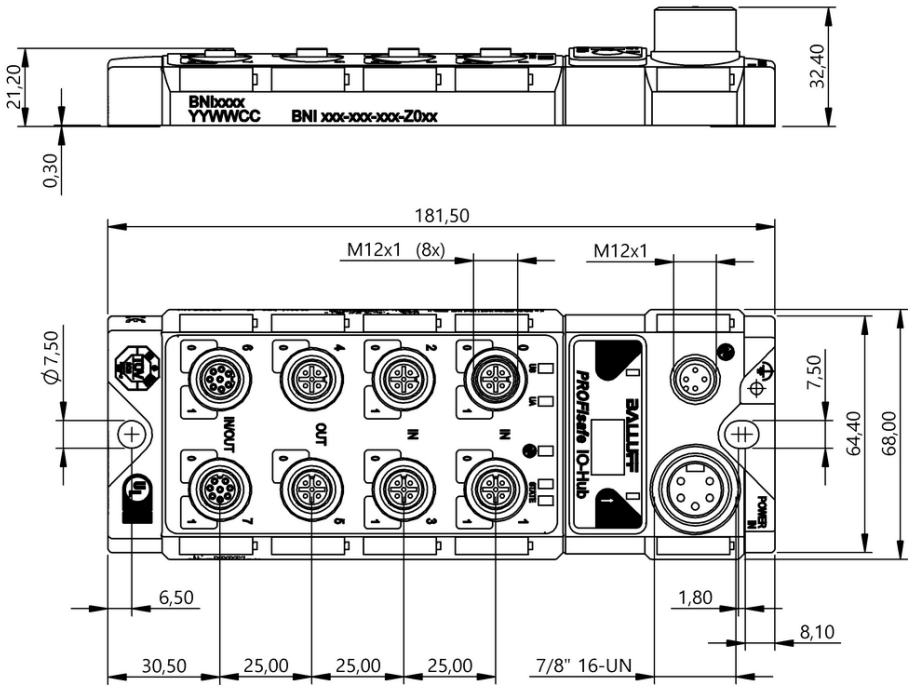
21,20
0,30
32,40
BNIbxxx
YYWWCC
BNI xxx-xxx-xxx-Z0xx
181,50
M12x1 (8x)
M12x1
Ø7,50
7,50
64,40
68,00
INOUT
OUT
IN
IN
PROFIsafe IO-Hub
BALLUFF
POWER IN
6,50
1,80
8,10
30,50
25,00
25,00
25,00
7/8" 16-UN

BNI0098

Safety

BASICS AND GLOSSARY

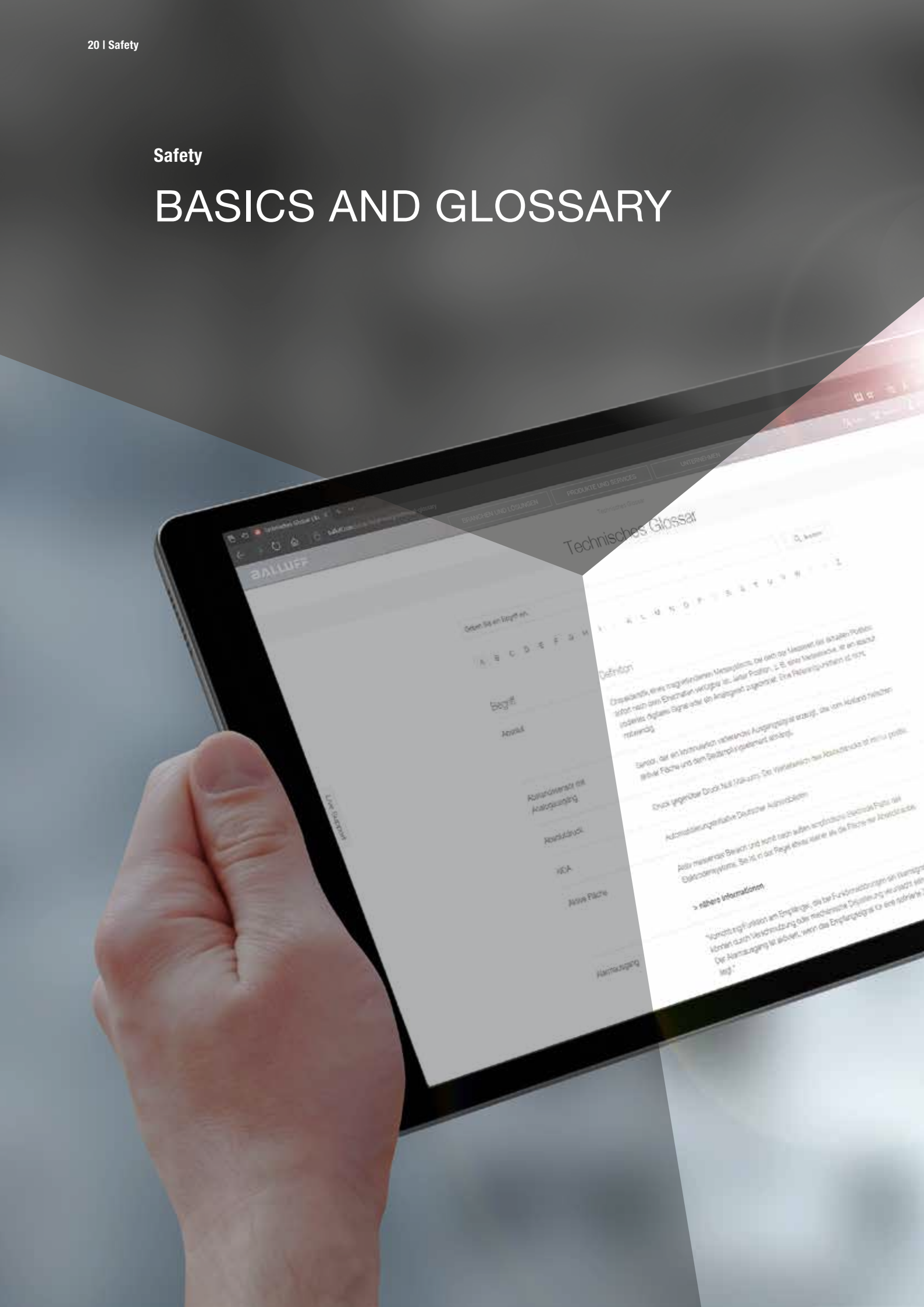

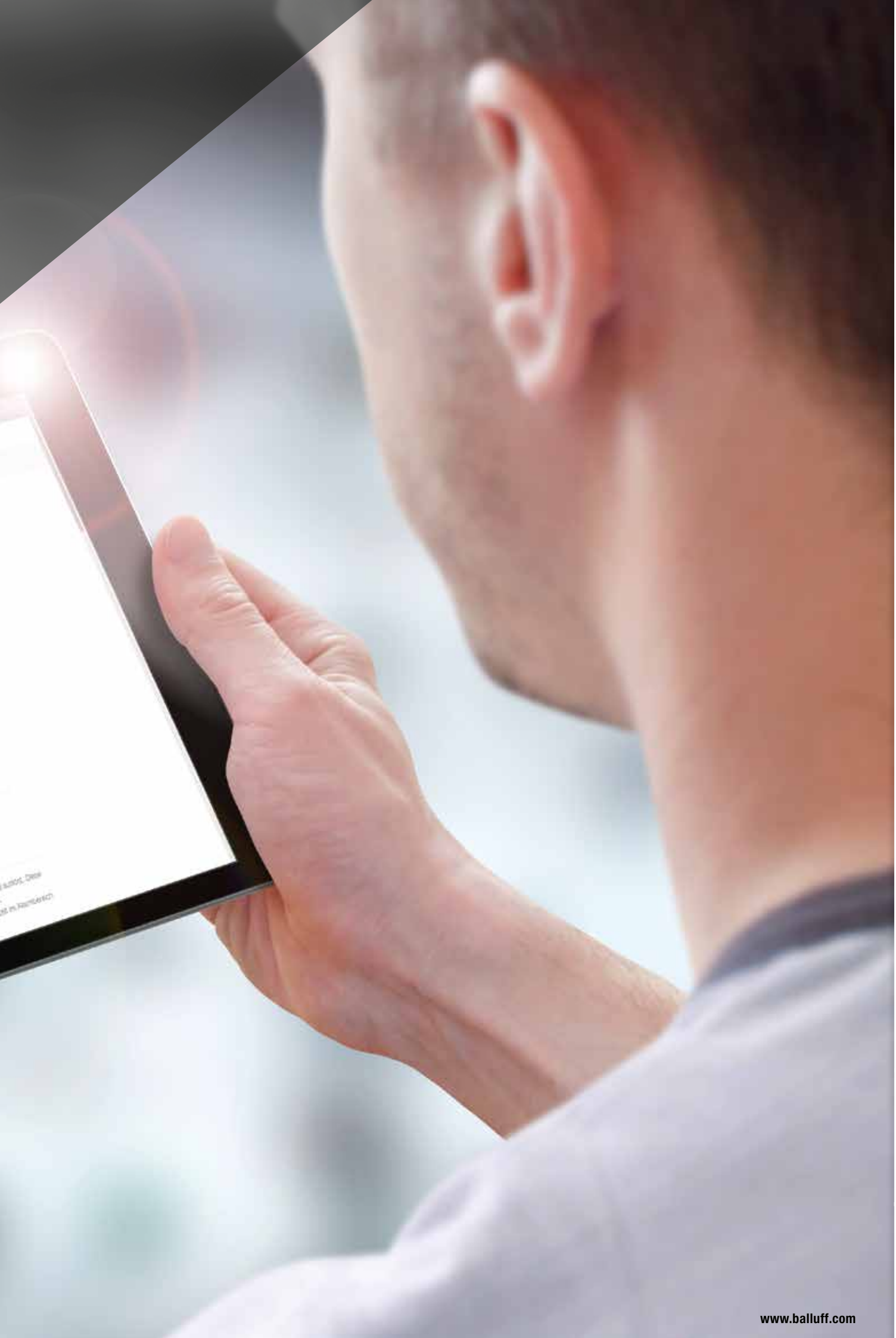

Failure	The inability of a unit to fulfill a required function	ISO 13849-1, ISO 12100
β	Is the common cause failure factor for undetectable dangerous faults λ_{DU}	IEC 62061
B_{10d}	Number of cycles until 10 % of the components fail dangerously	ISO 13849-1
User information (illustrative safety)	All of the information required for safe and proper use of the machine. It informs the user of the residual risk and warn him of it.	ISO 12100
CCF	Common cause failure, a specific type of dependent failure where several failures result from a single shared cause.	ISO 13849-1
CE marking	Indication from the manufacturer, distributor or EU-Representative that declares a product in compliance with EU regulation 765/2008, meaning the product meets the prevailing requirements as specified in the harmonization legislation of the Union regarding its affixing.	EU regulation 765/2008, EU regulation 765/2008
Coding	Connectors are designed to be reverse polarity protected.	ISO 13849-1, IEC 62061, IEC 61508
CRC	Cyclic redundancy check, procedure for determining a check value for data in order to detect errors in transmission or saving.	
DC	Diagnostic coverage indicator of the probability that the errors will be revealed by means of a test. Safety systems must be tested so that one knows whether they still function. The diagnostic coverage depends on the quality of the test. Poor tests cover only a few, whereas good tests cover many or even all errors. DC = ∑λdd/λdtotal	IEC 61508

DCavg	Average diagnostic coverage DC: Measure of the effectiveness of the diagnostics, which can be determined as the ratio of the failure rate of the detected hazardous fault and the fault rate of the total dangerous failures.	ISO 13849-1
Diversity	Having multiple means for performing a required function. Diversity-redundant systems can increase reliability.	IEC 61508
E/E/PES	Functional safety of electrical/electronic/programmable electronic safety-related systems	IEC 61508
Supplementary protective measures (indirect safety) (indirect safety measures)	Standards that must be taken to protect persons from hazards which cannot be sufficiently prevented or where the risks cannot be sufficiently limited.	ISO 12100
Error	Condition of a unit characterized by its inability to perform a required function. Not to be confused with "tampering"	ISO 13849-1, ISO 12100
FIT	Failure in time: A singular failure per 10^9 hours, or one failure per 114,000 years.	ISO 13849-1
FMEA	Failure mode effects analysis	ISO 13849-1, ISO 12100
Functional safety	The part of overall safety which depends on the correct function of the E/E/PE safety related system for risk reduction	IEC 61508, VDE 0803-4
Hazard/risk	Potential source of damage	ISO 13849-1
Hazardous area (risk area)	Any area in a machine and/or around a machine in which a person can be subjected to a hazard.	ISO 12100

Device types	Devices which are evaluated as a system first by the design process of the user are Device Type 2 or 3. Type 1 or Type 4 have been developed directly for use in a safety function. **Device Type 1:** Devices are ready to use safety devices with integrated diagnostics. These are already classified as SIL or PL. Examples: Safety light curtain, safety light grid, components for safety controllers, safe drives/drive functions, safety switching devices **Device Type 2:** Devices where the user must himself evaluate the device in terms of its safety. This requires additional application data (circuit structure, DC, CCF). Examples: Non-safe electronics, e.g. operational amplifier, proximity switch, pressure sensor, hydraulic valve **Device Type 3:** Devices are subject to wear. The user must provide additional application data for evaluating the safety function (switching frequency, actuation frequency, circuit structure, DC, CCF). Examples: Wear-prone electro-mechanical components, including power contactors, switches, pneumatic valves, interlocking devices, command devices **Device Type 4:** A special case of Device Type 1. For Device Type 4 the probability of a dangerous failure per hour PFHD = 0. The fault is either precluded or the fault always results in a safe state.	IEC 62061, VDMA 66413 standard sheet
HFT	Hardware fault tolerance: Ability to still perform a required function in the presence of errors or failures	IEC 62061, VDE 0113-50
Inherent safety	Direct intrinsic safety: A design that prevents hazards or reduces risks through suitable selection of design features of the machine itself.	ISO 12100
Placing on the market	Includes the responsibility if a distributed product does not comply with the relevant regulations.	2006/42/EG
IO-Link	IO-Link is the standardized IO technology for communicating with sensors and actuators. IO-Link is not a fieldbus, but rather a point-to-point communication based on the long-familiar 3-conductor sensor and actuator connection.	IEC 61131-9
Iterative process	A process of repetition of the same or similar actions for approaching a solution or particular goal.	ISO13849-1

Category [Cat.]	Categorization of the safety-related parts of a controller with respect to their resistance to errors and their behavior following an error. Categories are based on the structure of the arrangement of the parts, the error detection and/or their reliability.	ISO13849-1
Conformity	Declaration by the manufacturer that the distributed machine complies with all the relevant safety and health requirements.	2006/42/EG
λ (lambda)	Failure rate in [FIT] = 10^{-9} 1/h	IEC 62061
λ_d	Failure rate in the unsafe (hazardous) direction	IEC 62061
λ_{dd}	Failure rate in the unsafe (hazardous) direction; the failure is however detected through diagnostic means before it can have a hazardous effect.	IEC 62061
λ_{du}	Failure rate in the unsafe (hazardous) direction; the failure is not detected	IEC 62061
Λ_s (also: λsafe)	Failure rate in the safe direction	IEC 62061
MTTFd	Mean time to failure: Expected value of the average time until a dangerous failure	ISO 13849
MTTR	Mean time to repair	IEC 61508
Muting	Temporary automatic suppression of one or more safety functions by the SRP/CS	ISO 13849
PL	Performance level: Discrete level which specifies the capability of safety-relevant parts of a controller for performing a safety function under predictable conditions	ISO 13849-1
PFD	Probability of failure on demand	IEC 61508
PFDav	Average probability of failure on demand	IEC 61508

PFH	Probability of (dangerous) failure per hour	IEC 61508
PFHd	Probability of a dangerous failure per hour of a safety system or sub-system	IEC 61508
Product liability	Liability for damages compensation on the part of the manufacturer for damages to the end user resulting from a defective product	§4 Par. 1 Sentence 1 ProduktHaftG
PROFIsafe	How safety devices (E-Stop buttons, light grids, overfill prevention systems etc.) safely communicate with safety controllers over Profibus.	
Response time (for devices)	Time between action and reaction Example for safe I/O module: – Time between detection of a (state) change on the input port and the availability of this information on the communication interface (IO-Link) – Time between detection of new information on the communication interface (IO-Link) and its implementation on the output port	IEC 61508, IEC 62061
Residual risk	Risk remaining after protective measures have been taken	ISO 13849-1, ISO 12100
Risk analysis	Combination of determining the limits of the machine, identifying the risk, and risk assessment	ISO 13849-1, ISO 12100
Risk assessment	Totality of the process which includes a risk analysis and risk assessment	ISO 13849-1, ISO 12100
	Assessment based on the risk analysis as to whether the goals for risk reduction were achieved	ISO 13849-1, ISO 12100
Risk estimation	Determination of the probable extent of damage and probability of its occurrence	ISO 12100, DIN EN 1050
Risk graph	Means for risk classification. Determines which PL or SIL results per case. A role is played by the severity of the injury, frequency and/or duration of exposure to the hazard, and possibilities for avoiding the hazard.	ISO 13849-1, IEC 62061

Damage	Physical injury and/or damage to health (or property).	ISO 13849-1, IEC 61508, VDE 0803-4
Protective measure	Measure intended to achieve a reduction in risk is provided.	IEC 62061, VDE 0113-50
SFF	Proportion of safe failures; proportion of the total failure rate of a subsystem that does not lead to a dangerous failure.	ISO 61508, VDE 0803-4, IEC 62061, VDE 0113-50
Safety function	Function of a machine whereby a failure of the function can result in an increased risk (or risks)	ISO 13849-1, ISO 12100
SIL	Safety integrity level discrete level for specifying the safety integrity of the safety functions, whereby SIL 4 represents the highest level and SIL 1 the lowest level.	IEC 61508
SIL CL	SIL claim limit (of a sub-system)	IEC 62061
SRCF	Safety-relevant control function	IEC 62061
SRECS	Safety-relevant electrical control system	IEC 62061
SRP/CS	Safety-relevant part of a controller which responds to safety-relevant input signals and generates safety-relevant output signals	ISO 13849-1

Stop category	**Stop category 0:** Bringing to a stop by immediately interrupting power to the machine drive elements (i.e. an uncontrolled stop) **Stop category 1:** Controlled stopping, where the power to the machine drive elements is retained in order to cause stopping. The power is only interrupted when stop is achieved. **Stop category 1b:** Controlled stopping, where the power to the machine drive elements is maintained in order to cause stopping. Continuity of the stop condition is monitored, and when a failure is detected power is interrupted without generating a hazardous situation. **Stop category 2:** Controlled stopping, where power to the machine drive elements is maintained	IEC 60204-1
Validation	German Social Accident Insurance, ensures that a product provides the required results. See also "Verification"	IEC 61508, VDE 0803-4
Verification	Confirmation that a product meets the requirements. See also "Validation"	IEC 61508, VDE 0803-4
Reliability	The ability of an object to perform a particular function under particular conditions over a specified time interval	IEC 60050

Reliable information exchange across all levels

INDUSTRIAL NETWORKING.

innovating automation

The demands on industrial networking continually increase. The rising quantities of data and ever more complex communication require high-performance components that can reliably transport the information across all levels. This is especially true if high protection types, robustness, use at high temperatures or special interfaces and connections for maximum security are needed.

With the intelligent combination of high-performance industrial networking technology and the IO-Link communication standard, Balluff makes flexible and smooth communication in the most varied application scenarios possible.

Your Balluff solutions

- Network modules
- I/O modules
- Switches
- Memory modules
- Inductive couplers

INDUSTRIAL NETWORKING

34
NETWORK BLOCKS

36 Profinet
42 Profibus
46 CC-Link IE/Field
50 CC-Link IE-Field Basic
56 CC-Link
66 Ethernet/IP
70 Devicenet

74
SWITCHES

76 Unmanaged switches

80
I/O MODULES

82 IO-Link sensor/actuator hubs
112 IO-Link valve interface
118 Universal IO-Link interfaces

122
INDUCTIVE COUPLERS

124 IO-Link signal transmission
130 Signal transmission
140 Power supply

144
BASICS AND GLOSSARY

Extraordinary parameter settings and diagnostics capabilities

NETWORK BLOCKS

Balluff has developed a new generation of network modules for perfect linking of sensors and actuators. The system features highly versatile parameter settings and diagnostics possibilities that can be carried out via display, LEDs and an integrated Web server.

The status LEDs on the modules are large, bright and easy to read and interpret. This saves you time in setup, maintenance or troubleshooting. With an output current of up to 2 A, the Balluff network modules are capable of driving almost any load. Each output also offers overload protection with LED indicator and a memory feature for easy troubleshooting. The rugged, full-jacket enclosure also withstands high mechanical loads.

Features

- High performance in all networks
- Faster, simpler connection
- Reliable even in harsh environments, shock and vibration resistant
- IP67 design and rugged full-jacket enclosure
- Integrated Web server
- Line topology construction

	BNI005H BNI PNT-508-105-Z015	BNI007M BNI PNT-509-105-Z033	BNI004U BNI PNT-502-105-Z015
Interface	Profinet I/O	Profinet I/O	Profinet I/O
Fast Start-Up (FSU)	yes	yes	yes
Operating voltage Ub	18...30.2 VDC	18...30.2 VDC	18...30.2 VDC
Connection (COM 1)	M12x1-Female, 4-pin, D-coded	M12x1-Female, 4-pin, D-coded	M12x1-Female, 4-pin, D-coded
Connection (COM 2)	M12x1-Female, 4-pin, D-coded	M12x1-Female, 4-pin, D-coded	M12x1-Female, 4-pin, D-coded
Connection (supply voltage IN)	7/8“-Male, 5-pin	7/8“-Male, 5-pin	7/8“-Male, 5-pin
Connection (supply voltage OUT)	7/8“-Female, 5-pin	—	7/8“-Female, 5-pin
Connection slots	8x M12x1-Female, 5-pin, A-coded	16x M12x1-Female, 5-pin, A-coded	8x M12x1-Female, 5-pin, A-coded
Digital inputs	16x PNP, Type 3	32x PNP, Type 3	16x PNP, Type 3
Digital outputs	16x PNP	32x PNP	16x PNP
Configurable inputs/outputs	yes	yes	yes
Output current max.	2 A	2 A	2 A
Current sum US, sensor	9.0 A	9.0 A	9.0 A
Current sum UA, actuator	9.0 A	9.0 A	9.0 A
Housing material	Zinc, Die casting	Zinc, Die casting	Zinc, Die casting
Dimension	68 x 37.9 x 224 mm	68 x 37.9 x 334 mm	68 x 37.9 x 224 mm
Ambient temperature	-5...70 °C	-5...70 °C	-5...70 °C
IP rating	IP67	IP67	IP67
Auxiliary interfaces	8x IO-Link	8x IO-Link 8x IO-Link	4x IO-Link
IO-Link version	1.1	1.1	1.1
Port-class	Type A	Type A	Type A
Productview	Page 38	Page 38	Page 39

	BNI006C BNI PNT-502-102-Z015	BNI0092 BNI PNT-507-005-Z040	BNI00A9 BNI PNT-527-005-Z040	BNI0052 BNI PNT-302-105-Z015	BNI0053 BNI PNT-104-105-Z015
	Profinet I/O	Profinet I/O	Profinet I/O	Profinet I/O	Profinet I/O
	yes	yes	yes	yes	yes
	18...30.2 VDC	18...30.2 VDC	18...30.2 VDC	18...30.2 VDC	18...30.2 VDC
	M12x1-Female, 4-pin, D-coded	M12x1-Female, 4-pin, D-coded	M12x1-Female, 4-pin, D-coded	M12x1-Female, 4-pin, D-coded	M12x1-Female, 4-pin, D-coded
	M12x1-Female, 4-pin, D-coded	M12x1-Female, 4-pin, D-coded	M12x1-Female, 4-pin, D-coded	M12x1-Female, 4-pin, D-coded	M12x1-Female, 4-pin, D-coded
	7/8“-Male, 5-pin	7/8“-Male, 5-pin	7/8“-Male, 5-pin	7/8“-Male, 5-pin	7/8“-Male, 5-pin
	7/8“-Female, 5-pin	—	—	7/8“-Female, 5-pin	7/8“-Female, 5-pin
	8x M12x1-Female, 5-pin, A-coded	4x M12x1-Female, 5-pin, A-coded	4x M12x1-Female, 5-pin, A-coded	8x M12x1-Female, 5-pin, A-coded	8x M12x1-Female, 5-pin, A-coded
	16x PNP, Type 3	8x PNP, Type 3	4x PNP, Type 3	16x PNP, Type 2	16x PNP, Type 2
	16x PNP	8x PNP	—	16x PNP	—
	yes	yes	no	yes	no
	2 A	2 A	—	2 A	—
	9.0 A	9.0 A	9.0 A	9.0 A	9.0 A
	9.0 A	9.0 A	9.0 A	9.0 A	—
	Zinc, Die casting	Zinc, Die casting	Zinc, Die casting	Zinc, Die casting	Zinc, Die casting
	68 x 37.9 x 224 mm	37 x 32.6 x 224 mm	37 x 32.6 x 224 mm	68 x 37.9 x 224 mm	68 x 37.9 x 224 mm
	-5...70 °C	-40...70 °C	-40...70 °C	-5...70 °C	-5...70 °C
	IP67	IP67	IP67	IP67	IP67
	4x IO-Link	4x IO-Link	4x IO-Link	—	—
	1.1	1.1	1.1	—	—
	Type A	Type A	Type B	—	—
	Page 39	Page 40	Page 40	Page 41	Page 41

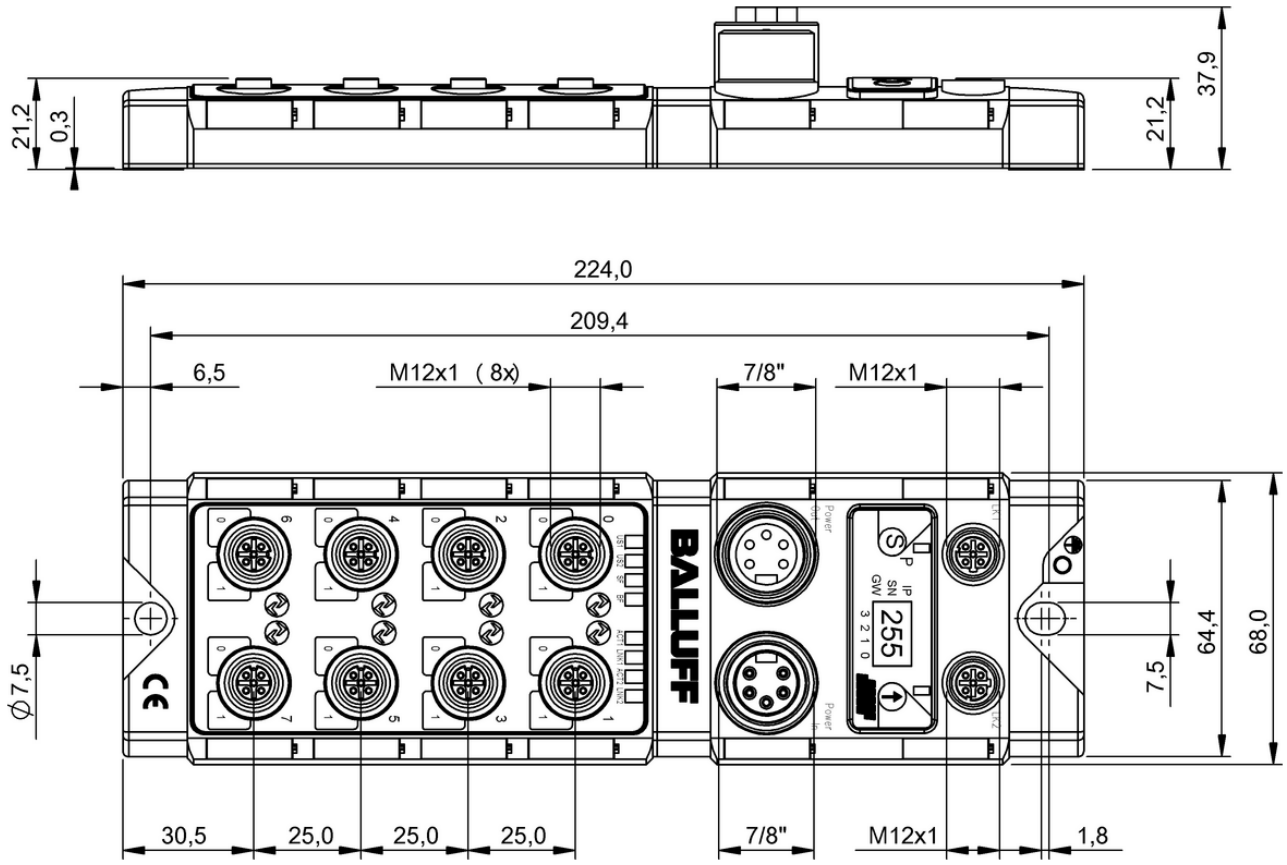

BNI005H

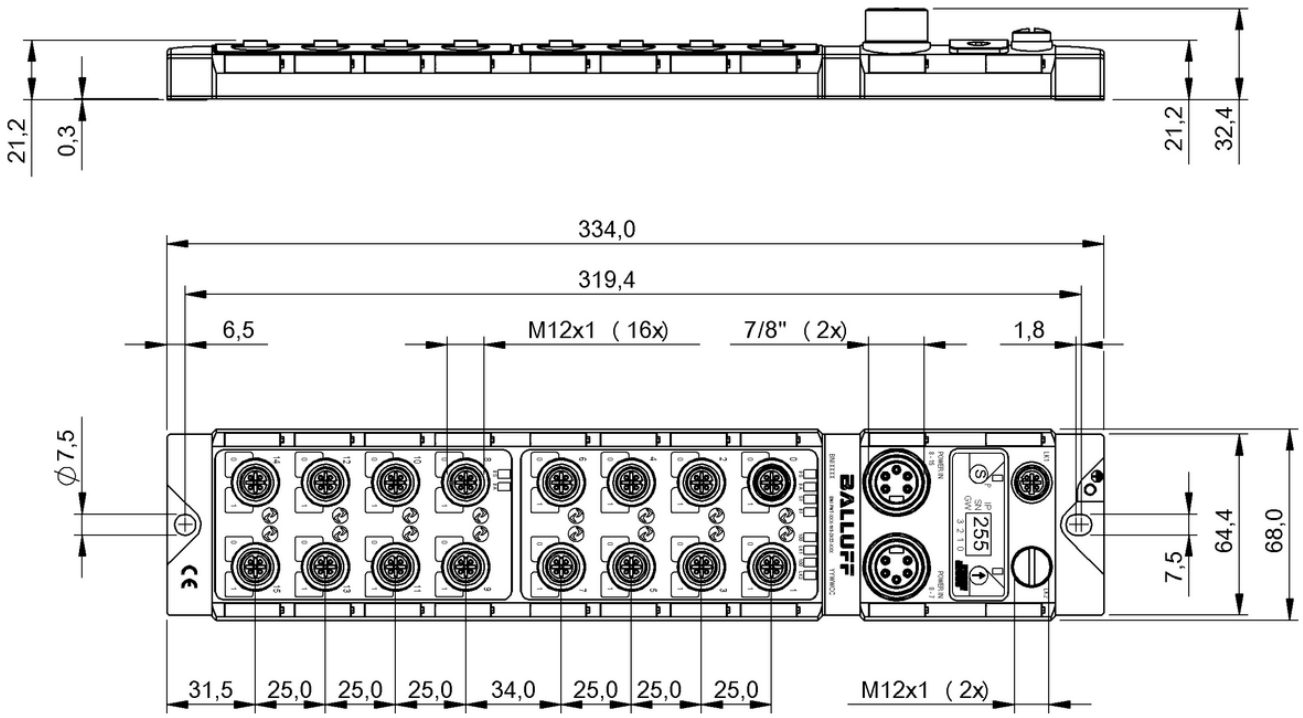

BNI007M

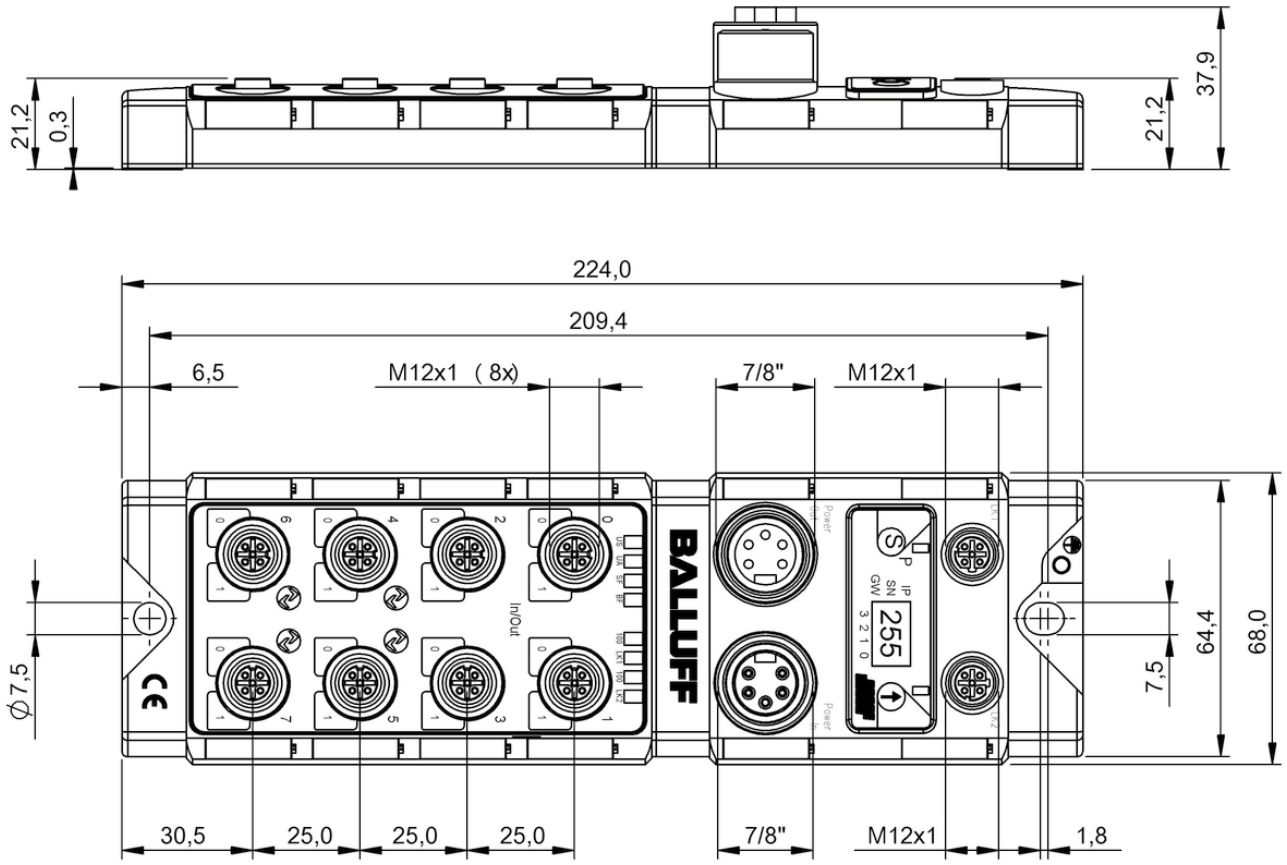

BNI004U

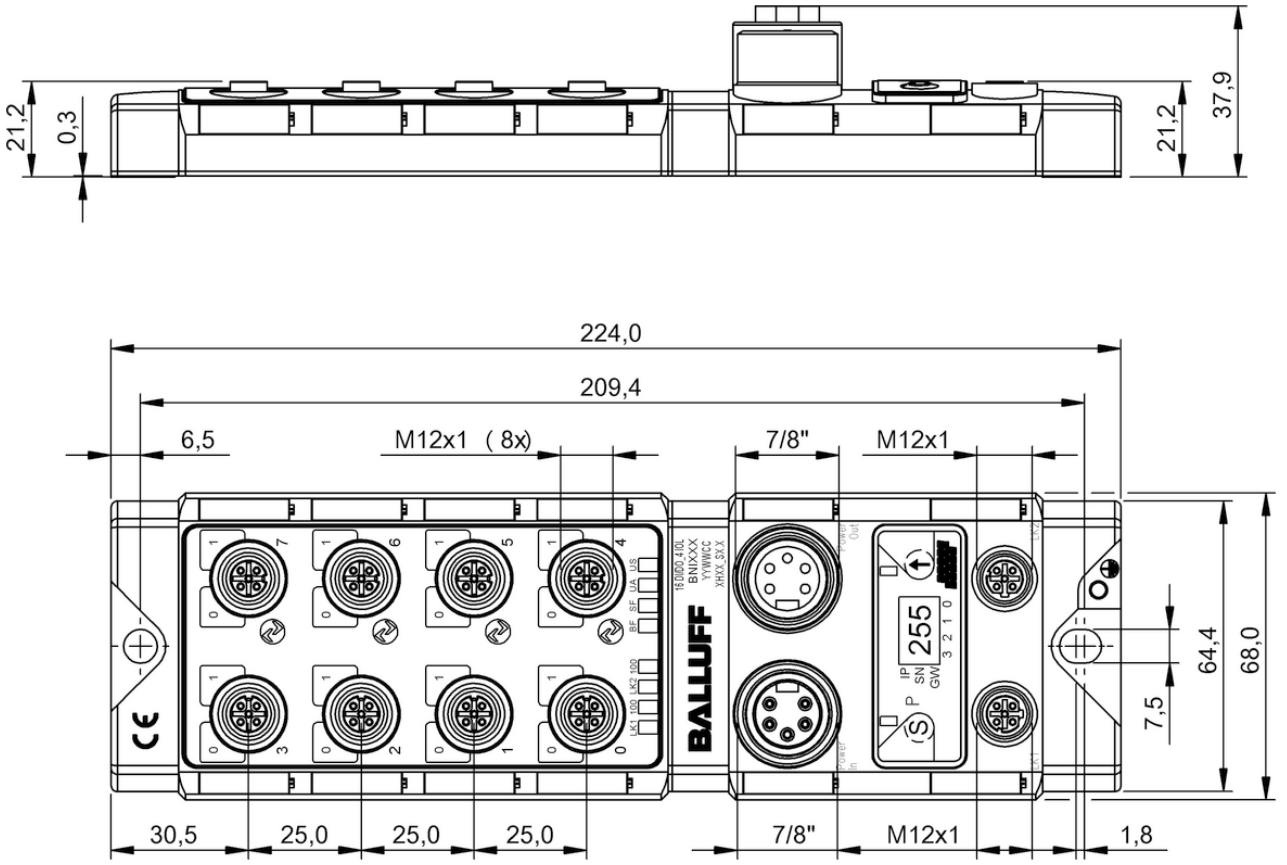

BNI006C

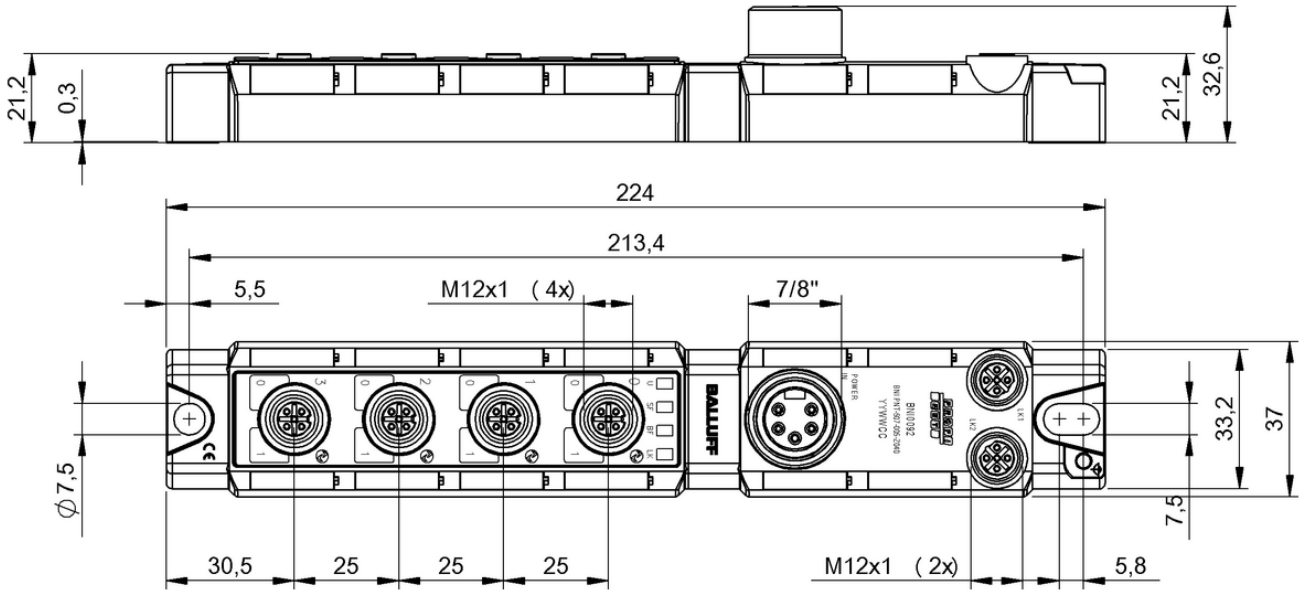

BNI0092

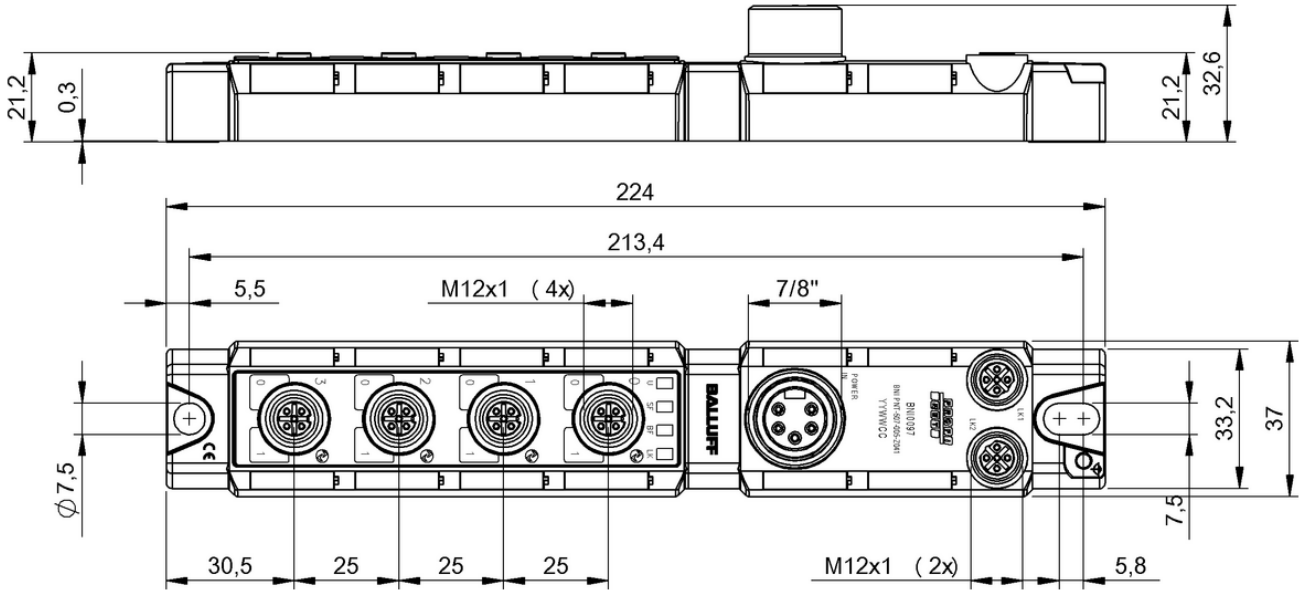

BNI00A9

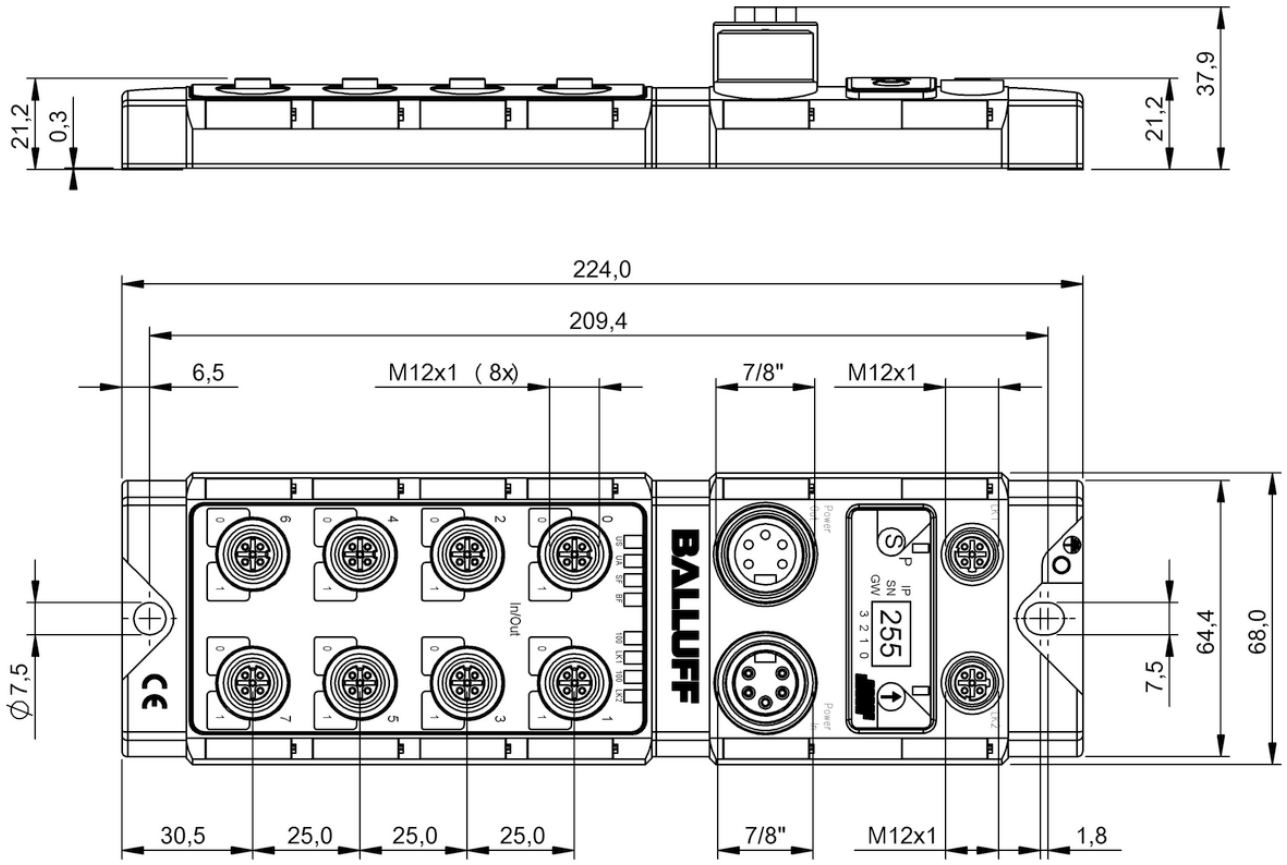

BNI0052

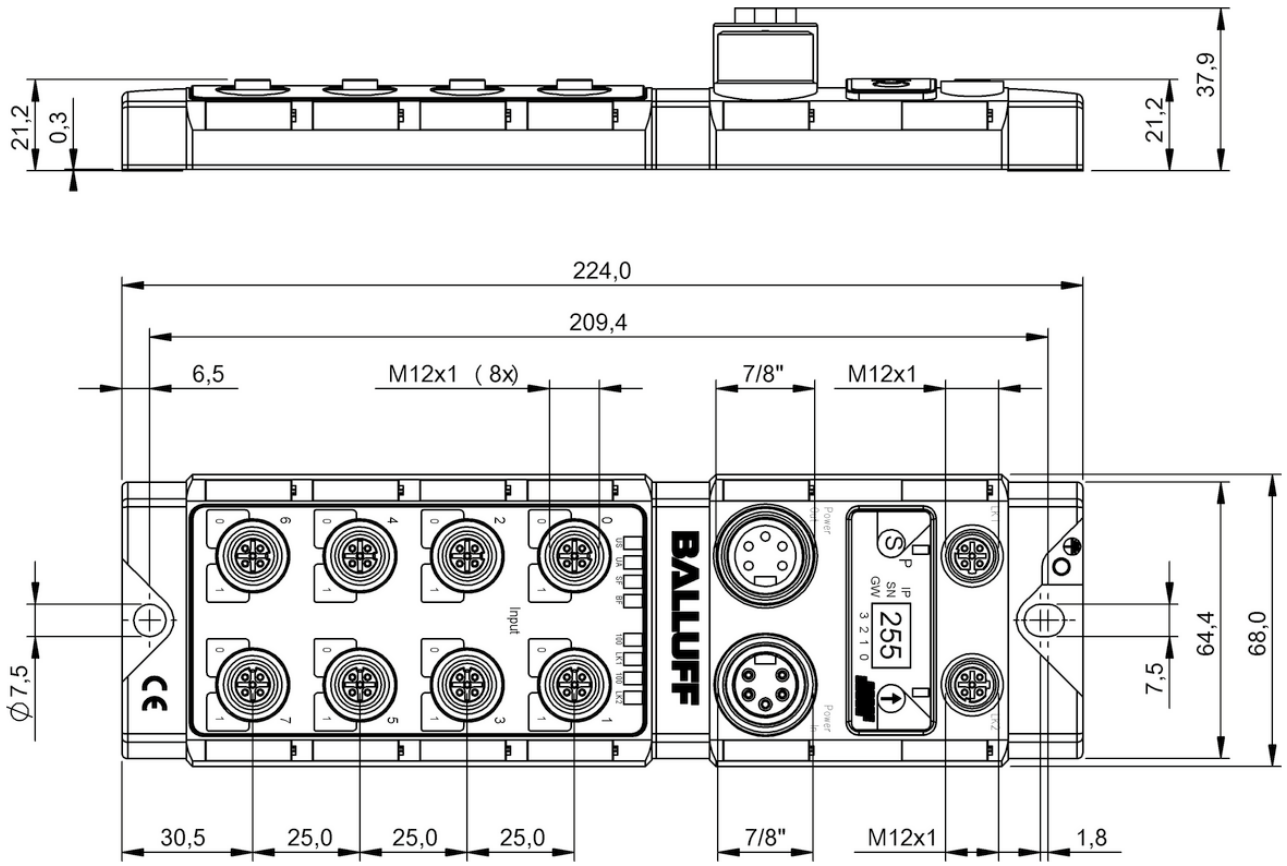

BNI0053

	BNI005R BNI PBS-502-101-Z001	
Interface	Profibus DP EN 50170	
Operating voltage Ub	18...30.2 VDC	
Connection (COM 1)	M12x1-Male, 5-pin, B-coded	
Connection (COM 2)	M12x1-Female, 5-pin, B-coded	
Connection (supply voltage IN)	7/8“-Male, 5-pin	
Connection (supply voltage OUT)	7/8“-Female, 5-pin	
Connection slots	8x M12x1-Female, 5-pin, A-coded	
Digital inputs	16x PNP, Type 2	
Digital outputs	16x PNP	
Configurable inputs/outputs	yes	
cal_current_load_capacity_max	2 A	
Current sum US, sensor	9.0 A	
Current sum UA, actuator	9.0 A	
Housing material	Zinc, Die casting	
Dimension	68 x 37.9 x 224 mm	
Ambient temperature	-5...70 °C	
IP rating	IP67	
Auxiliary interfaces	4x IO-Link	
IO-Link version	1.1	
Port-class	Type A	
Productview	Page 44	

	BNI004N BNI PBS-507-002-Z011	BNI0047 BNI PBS-302-101-Z001	BNI005C BNI PBS-104-101-Z001
	Profibus DP EN 50170	Profibus DP EN 50170	Profibus DP EN 50170
	18...30.2 VDC	18...30.2 VDC	18...30.2 VDC
	M12x1-Male, 5-pin, B-coded	M12x1-Male, 5-pin, B-coded	M12x1-Male, 5-pin, B-coded
	M12x1-Female, 5-pin, B-coded	M12x1-Female, 5-pin, B-coded	M12x1-Female, 5-pin, B-coded
	7/8“-Male, 5-pin	7/8“-Male, 5-pin	7/8“-Male, 5-pin
	—	7/8“-Female, 5-pin	7/8“-Female, 5-pin
	4x M12x1-Female, 5-pin, A-coded	8x M12x1-Female, 5-pin, A-coded	8x M12x1-Female, 5-pin, A-coded
	8x PNP, Type 2	16x PNP, Type 2	16x PNP, Type 2
	8x PNP	16x PNP	—
	yes	yes	no
	2 A	2 A	—
	9.0 A	9.0 A	9.0 A
	9.0 A	9.0 A	—
	Zinc, Die casting	Zinc, Die casting	Zinc, Die casting
	37 x 32.4 x 224 mm	68 x 37.9 x 224 mm	68 x 37.9 x 224 mm
	-5...70 °C	-5...70 °C	-5...70 °C
	IP67	IP67	IP67
	4x IO-Link	—	—
	1.1	—	—
	Type A	—	—
	Page 44	Page 45	Page 45

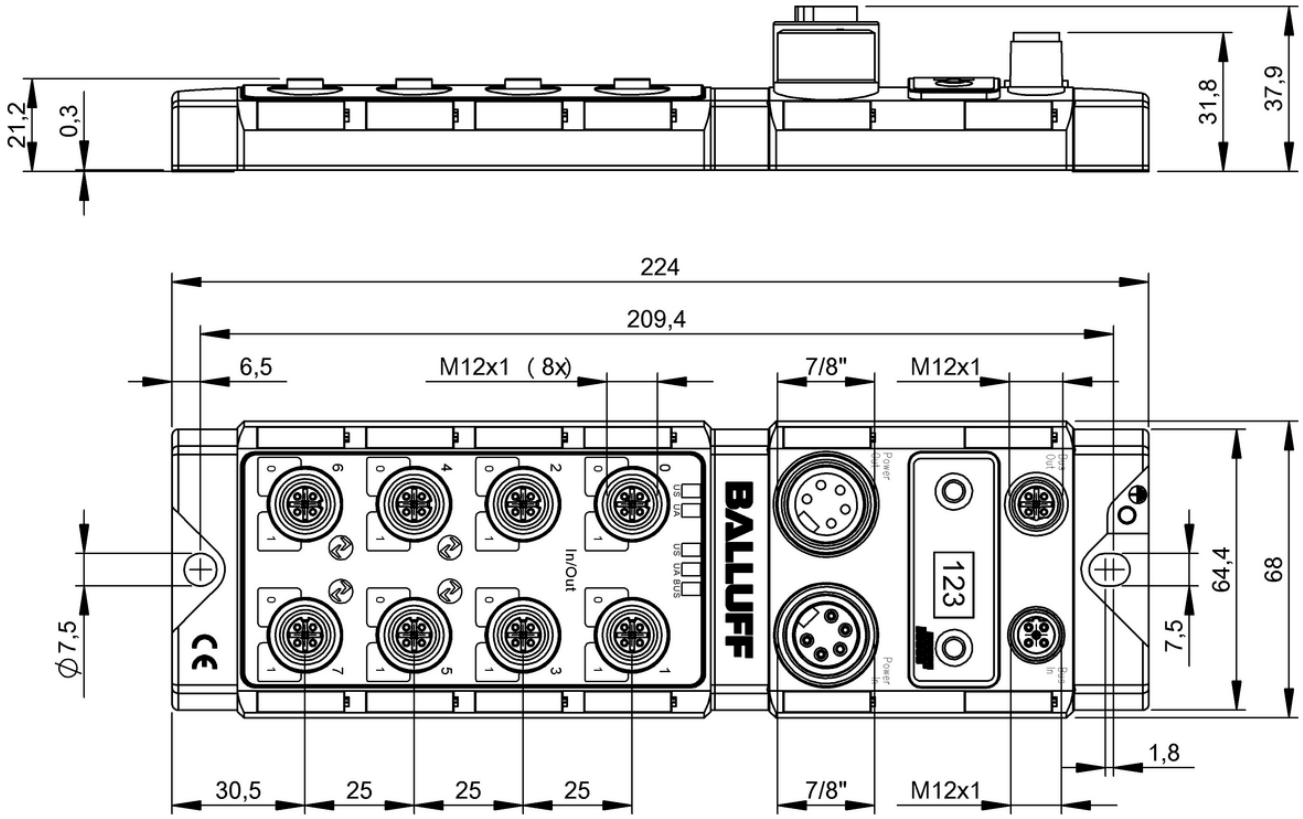

BNI005R

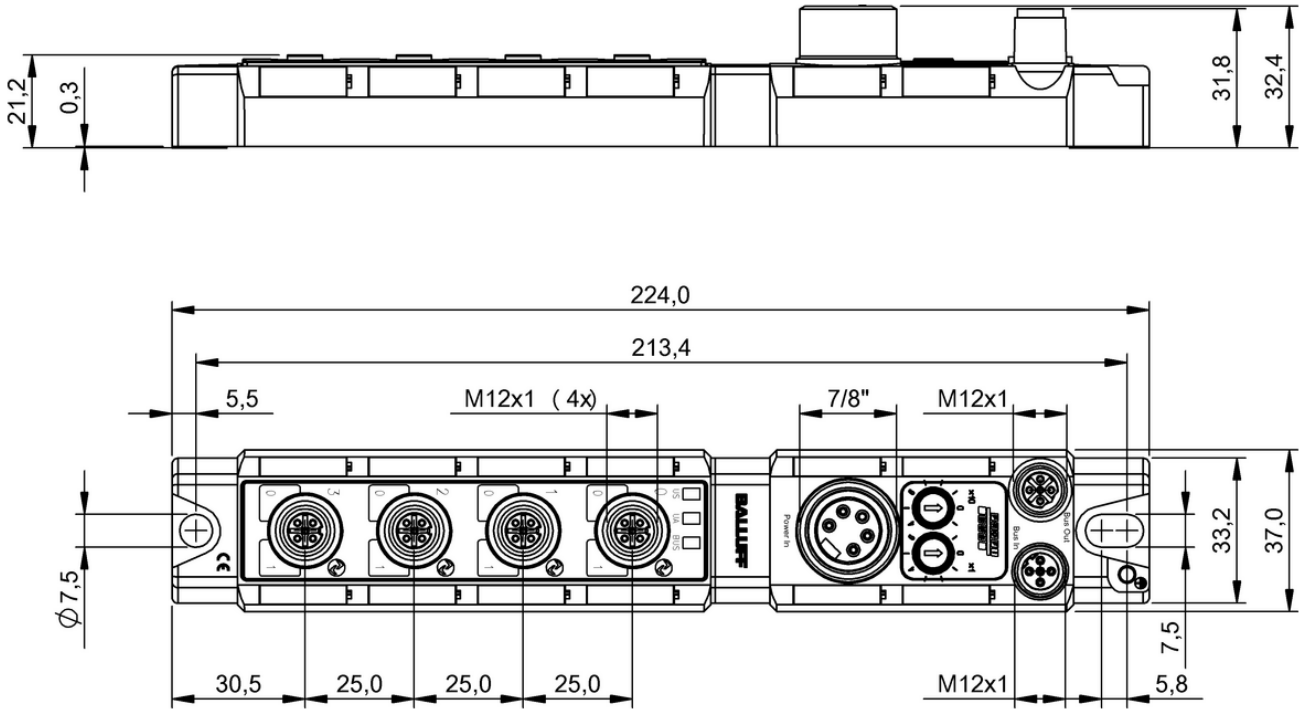

BNI004N

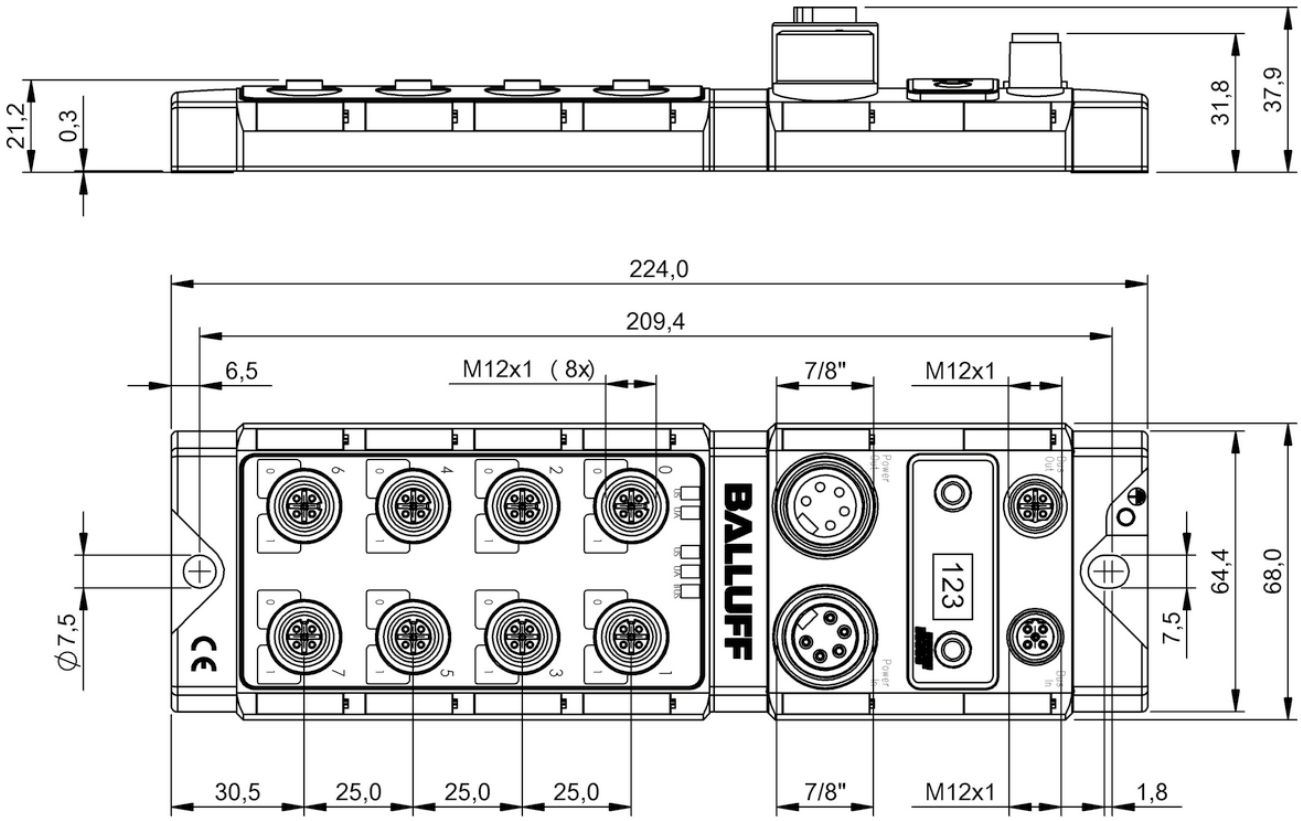

BNI0047, BNI005C

Interface	
Fast Start-Up (FSU)	
Operating voltage Ub	
Connection (COM 1)	
Connection (COM 2)	
Connection (supply voltage IN)	
Connection (supply voltage OUT)	
Connection slots	
Digital inputs	
Digital outputs	
Configurable inputs/outputs	
Output current max.	
Current sum US, sensor	
Current sum UA, actuator	
Housing material	
Dimension	
Ambient temperature	
IP rating	
Auxiliary interfaces	
IO-Link version	
Port-class	
Productview	

	BNI008C BNI CIE-508-105-Z015	BNI0095 BNI CIE-302-105-Z015
	CC-Link IE Field V0	CC-Link IE Field V0
	—	—
	18...30.2 VDC	18...30.2 VDC
	M12x1-Female, 8-pin, X-coded	M12x1-Female, 8-pin, X-coded
	M12x1-Female, 8-pin, X-coded	M12x1-Female, 8-pin, X-coded
	7/8“-Male, 5-pin	7/8“-Male, 5-pin
	7/8“-Female, 5-pin	7/8“-Female, 5-pin
	8x M12x1-Female, 5-pin, A-coded	8x M12x1-Female, 5-pin, A-coded
	16x PNP, Type 3	16x PNP, Type 3
	16x PNP	16x PNP
	yes	yes
	2 A	2 A
	9.0 A	9.0 A
	9.0 A	9.0 A
	Zinc, Die casting	Zinc, Die casting
	68 x 37.9 x 224 mm	68 x 37.9 x 224 mm
	-5...70 °C	-5...70 °C
	IP67	IP67
	8x IO-Link	—
	1.1	—
	Type A	—
	Page 48	Page 48

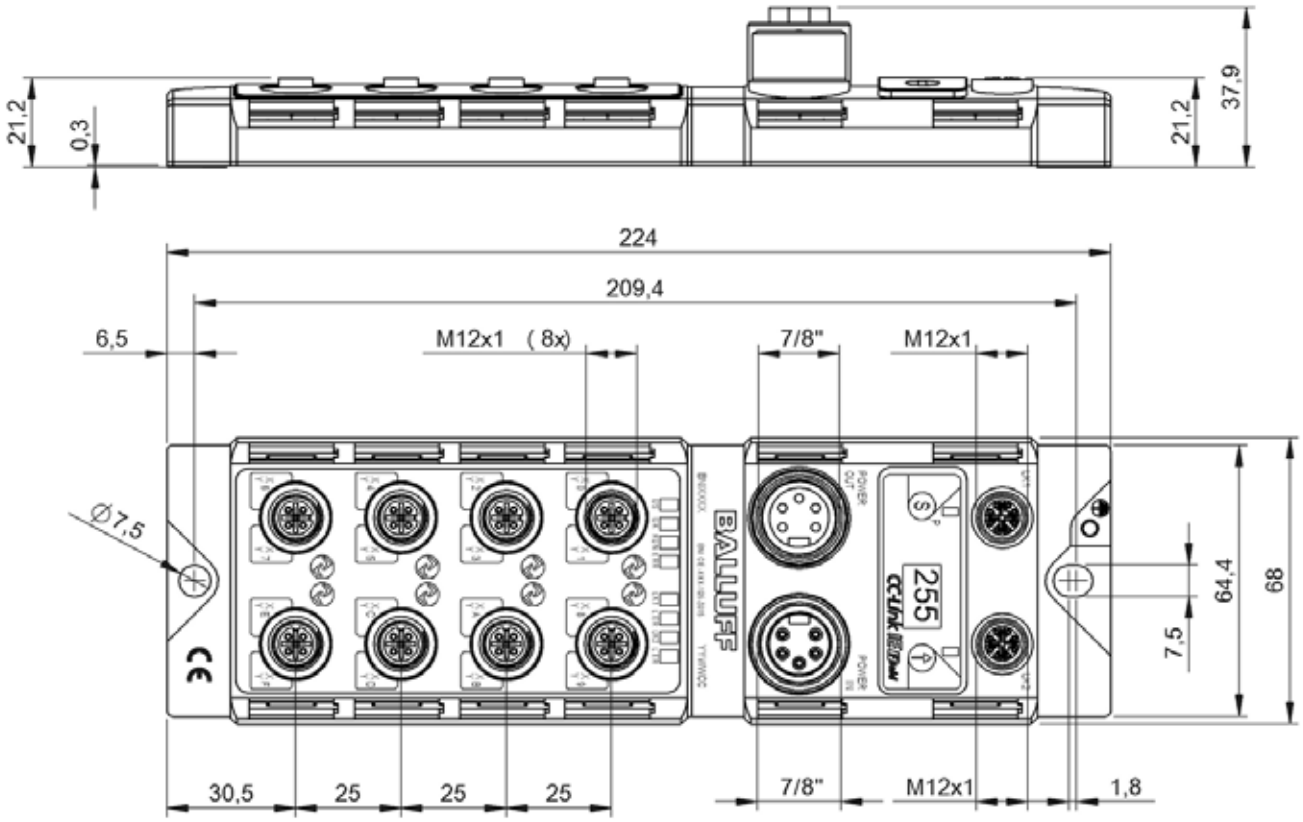

BNI008C

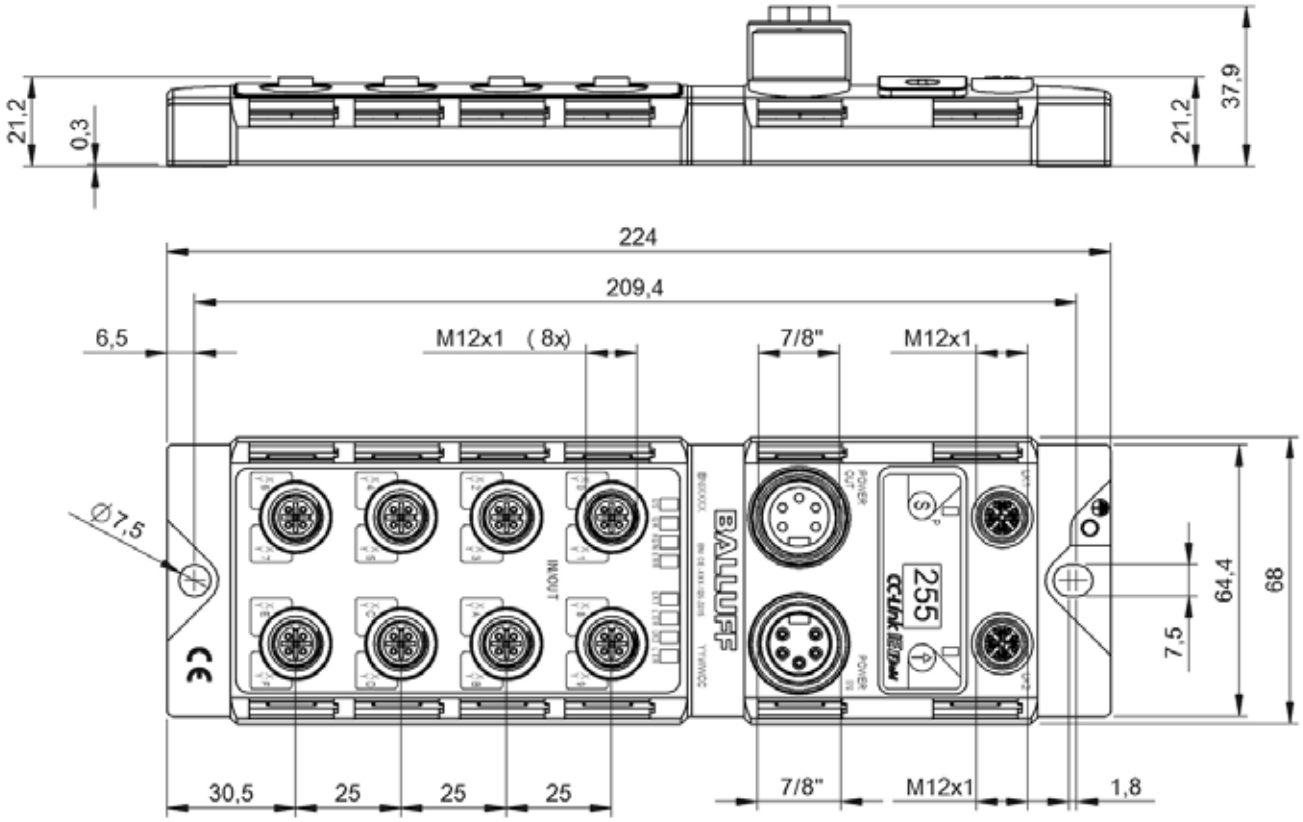

BNI0095

	BNI00E7 BNI CIB-508-105-Z015
Interface	CC-Link IE Field Basic
Fast Start-Up (FSU)	—
Operating voltage Ub	18...30.2 VDC
Connection (COM 1)	M12x1-Female, 4-pin, D-coded
Connection (COM 2)	M12x1-Female, 4-pin, D-coded
Connection (supply voltage IN)	7/8“-Male, 5-pin
Connection (supply voltage OUT)	7/8“-Female, 5-pin
Connection slots	8x M12x1-Female, 5-pin, A-coded
Digital inputs	16x PNP, Type 3
Digital outputs	16x PNP
Configurable inputs/outputs	yes
cal_current_load_capacity_max	2 A
Current sum US, sensor	9.0 A
Current sum UA, actuator	9.0 A
Housing material	Zinc, Die casting
Dimension	68 x 37.9 x 224 mm
Ambient temperature	-5...70 °C
IP rating	IP67
Auxiliary interfaces	8x IO-Link
IO-Link version	1.1
Port-class	Type A

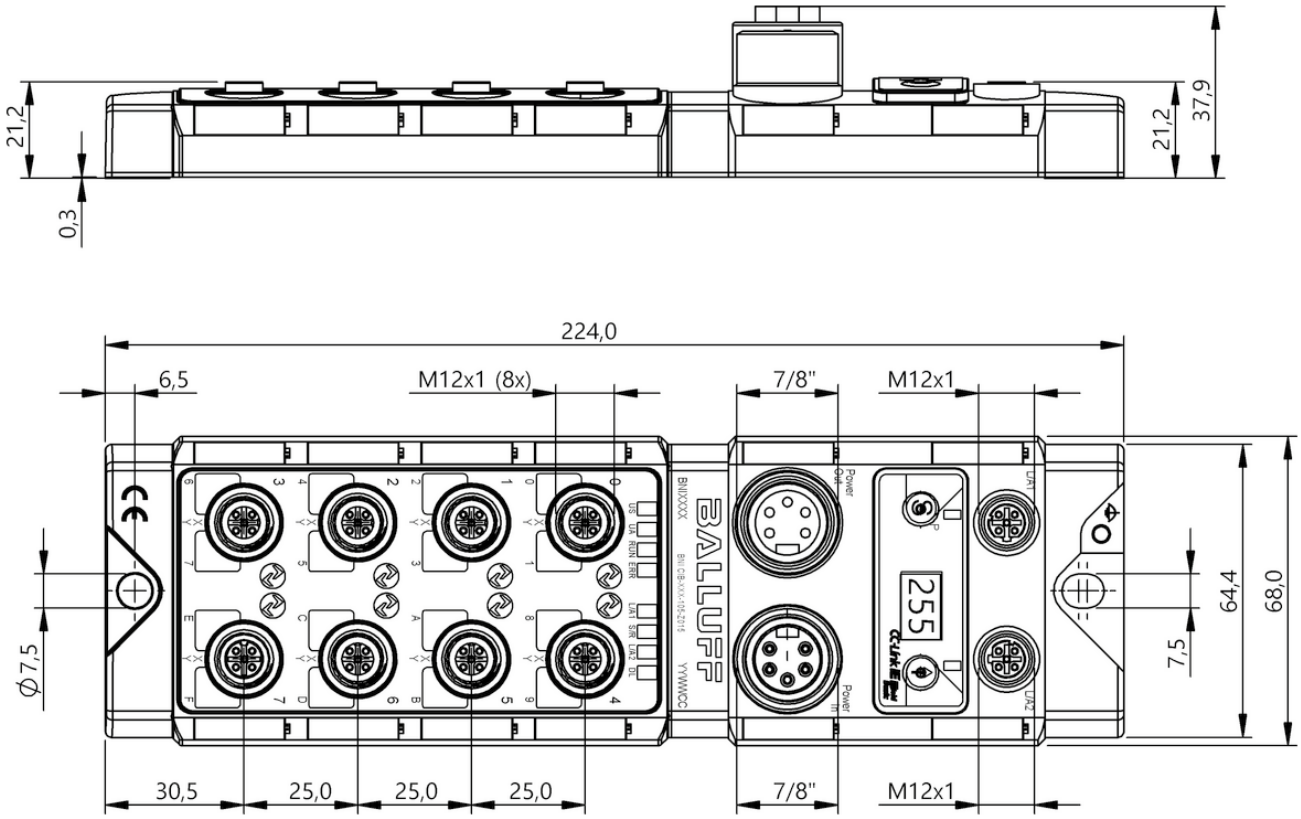

BNI00E7

Do you need more details? Our Product Finder at www.balluff.com provides you with product-specific information, including technical drawings, data sheets, user guides and more for each individual product. All items are available for download.

Interface	
Fast Start-Up (FSU)	
Operating voltage Ub	
Connection (COM 1)	
Connection (COM 2)	
Connection (supply voltage IN)	
Connection (supply voltage OUT)	
Connection slots	
Digital inputs	
Digital outputs	
Configurable inputs/outputs	
Output current max.	
Current sum US, sensor	
Current sum UA, actuator	
Housing material	
Dimension	
Ambient temperature	
IP rating	
Auxiliary interfaces	
IO-Link version	
Port-class	
Productview	

	BNI0040 BNI CCL-502-100-Z001	BNI002A BNI CCL-302-100-Z001
	CC-Link V1.1	CC-Link V1.1
	—	—
	18...30.2 VDC	18...30.2 VDC
	M12x1-Male, 4-pin, A-coded	M12x1-Male, 4-pin, A-coded
	M12x1-Female, 4-pin, A-coded	M12x1-Female, 4-pin, A-coded
	7/8“-Male, 5-pin	7/8“-Male, 5-pin
	7/8“-Female, 5-pin	7/8“-Female, 5-pin
	8x M12x1-Female, 5-pin, A-coded	8x M12x1-Female, 5-pin, A-coded
	16x PNP, Type 2	16x PNP, Type 2
	16x PNP	16x PNP
	yes	yes
	2 A	2 A
	9.0 A	9.0 A
	9.0 A	9.0 A
	Zinc, Die casting	Zinc, Die casting
	68 x 37.9 x 224 mm	68 x 37.9 x 224 mm
	-5...70 °C	-5...55 °C
	IP67	IP67
	4x IO-Link	—
	1.1	—
	Type A	—
	Page 54	Page 54

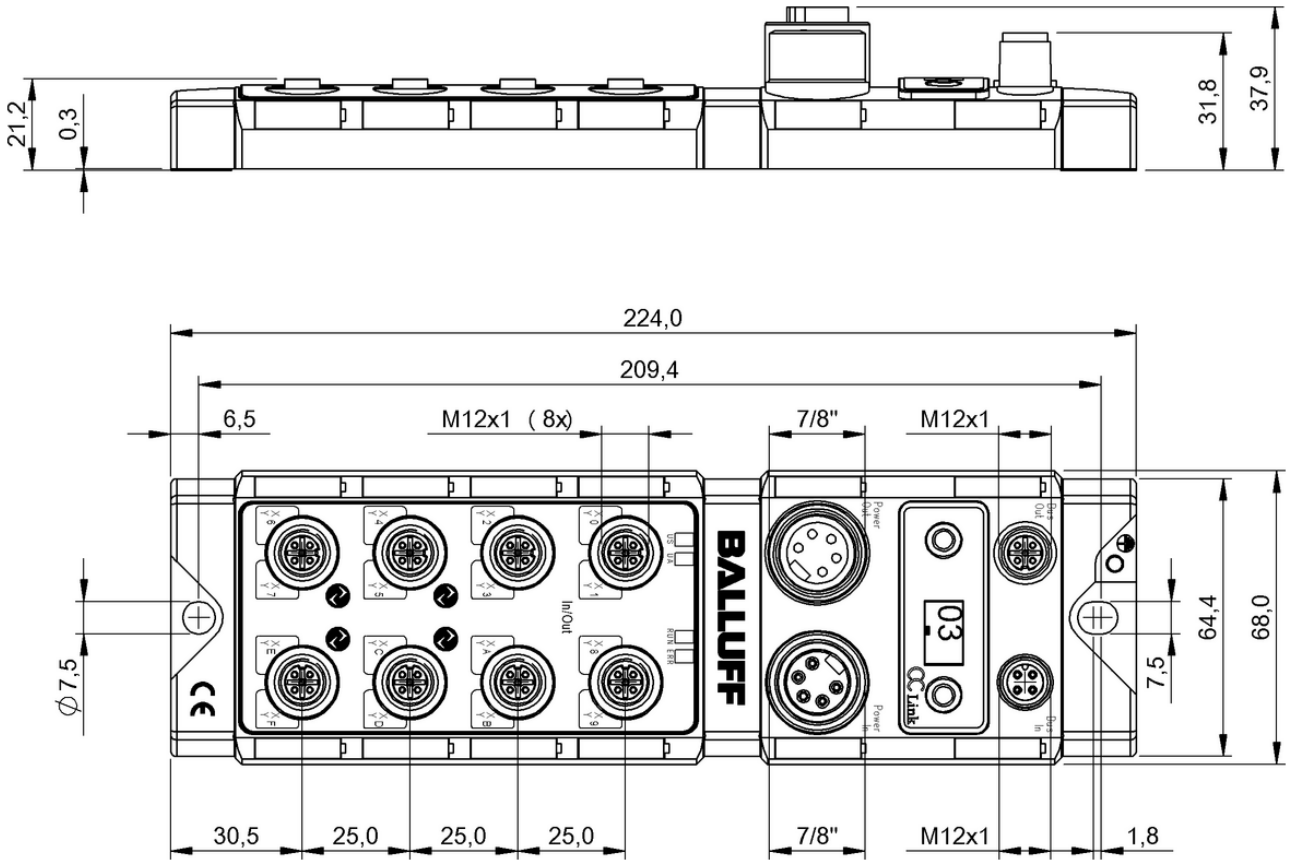

BNI0040

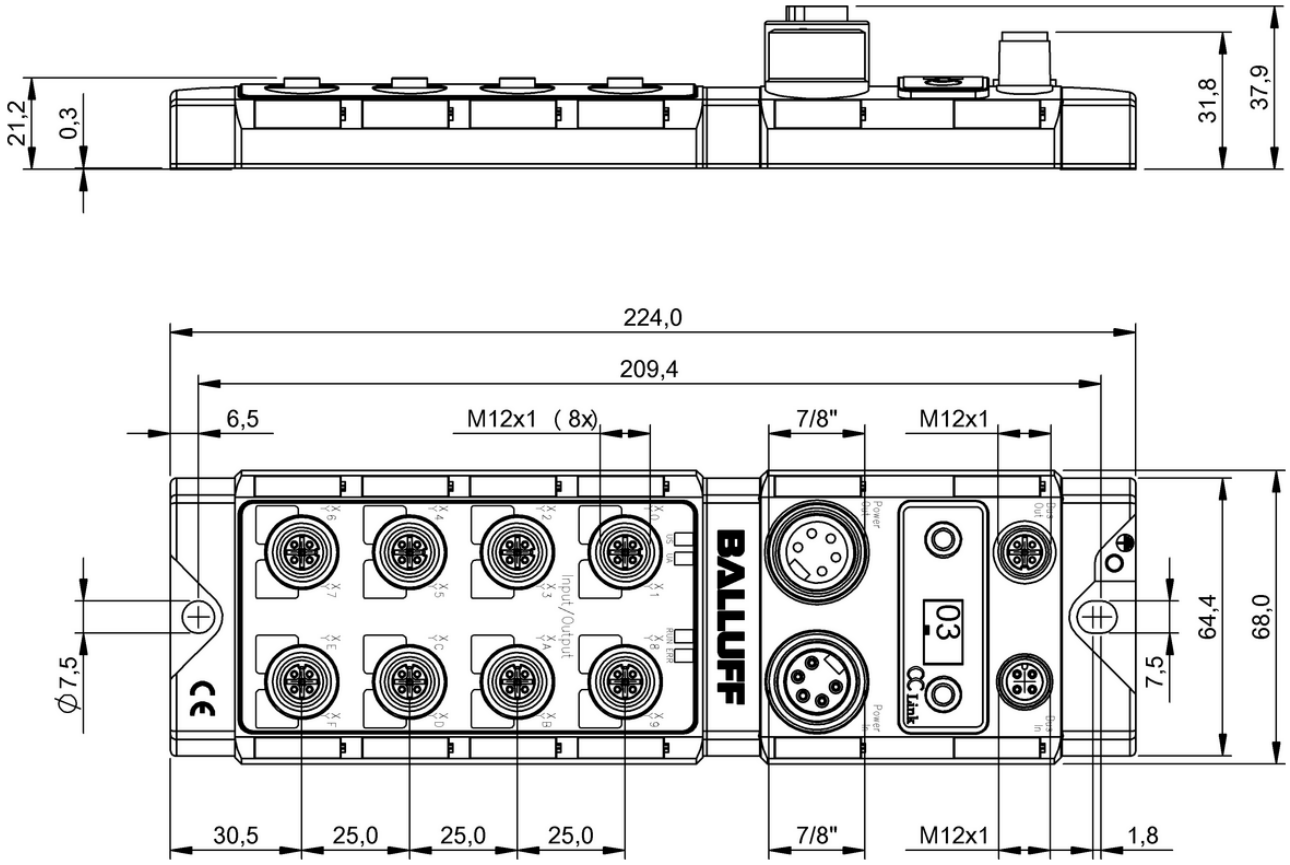

BNI002A

	BNI006A BNI EIP-508-105-Z015	BNI004A BNI EIP-502-105-Z015	
Interface	Ethernet/IP	Ethernet/IP	
Fast Start-Up (FSU)	—	—	
Operating voltage Ub	18...30.2 VDC	18...30.2 VDC	
Connection (COM 1)	M12x1-Female, 4-pin, D-coded	M12x1-Female, 4-pin, D-coded	
Connection (COM 2)	M12x1-Female, 4-pin, D-coded	M12x1-Female, 4-pin, D-coded	
Connection (supply voltage IN)	7/8“-Male, 4-pin	7/8“-Male, 4-pin	
Connection (supply voltage OUT)	7/8“-Female, 4-pin	7/8“-Female, 4-pin	
Connection slots	8x M12x1-Female, 5-pin, A-coded	8x M12x1-Female, 5-pin, A-coded	
Digital inputs	16x PNP, Type 3	16x PNP, Type 2	
Digital outputs	16x PNP	16x PNP	
Configurable inputs/outputs	yes	yes	
Output current max.	2 A	2 A	
Current sum US, sensor	9.0 A	9.0 A	
Current sum UA, actuator	9.0 A	9.0 A	
Housing material	Zinc, Die casting	Zinc, Die casting	
Dimension	68 x 37.9 x 224 mm	68 x 37.9 x 224 mm	
Ambient temperature	-5...70 °C	-5...70 °C	
IP rating	IP67	IP67	
Auxiliary interfaces	8x IO-Link	4x IO-Link	
IO-Link version	1.1	1.1	
Port-class	Type A	Type A	
Productview	Page 60	Page 60	

	BNI009T BNI EIP-507-005-Z040	BNI00AA BNI EIP-527-005-Z040	BNI004F BNI EIP-302-105-Z015	
	Ethernet/IP	Ethernet/IP	Ethernet/IP	
	—	—	—	
	18...30.2 VDC	18...30.2 VDC	18...30.2 VDC	
	M12x1-Female, 4-pin, D-coded	M12x1-Female, 4-pin, D-coded	M12x1-Female, 4-pin, D-coded	
	M12x1-Female, 4-pin, D-coded	M12x1-Female, 4-pin, D-coded	M12x1-Female, 4-pin, D-coded	
	7/8“-Male, 4-pin	7/8“-Male, 4-pin	7/8“-Male, 4-pin	
	—	—	7/8“-Female, 4-pin	
	4x M12x1-Female, 5-pin, A-coded	4x M12x1-Female, 5-pin, A-coded	8x M12x1-Female, 5-pin, A-coded	
	8x PNP, Type 3	4x PNP, Type 3	16x PNP, Type 2	
	8x PNP	—	16x PNP	
	yes	no	yes	
	2 A	—	2 A	
	9.0 A	9.0 A	9.0 A	
	9.0 A	9.0 A	9.0 A	
	Zinc, Die casting	Zinc, Die casting	Zinc, Die casting	
	37 x 32.6 x 224 mm	37 x 32.6 x 224 mm	68 x 37.9 x 224 mm	
	-40...70 °C	-40...70 °C	-5...70 °C	
	IP67	IP67	IP67	
	4x IO-Link	4x IO-Link	—	
	1.1	1.1	—	
	Type A	Type B	—	
	Page 61	Page 61	Page 62	

	BNI004M BNI EIP-104-105-Z015	BNI008M BNI EIP-508-105-R015	
Interface	Ethernet/IP	Ethernet/IP	
Fast Start-Up (FSU)	—	—	
Operating voltage Ub	18...30.2 VDC	18...30.2 VDC	
Connection (COM 1)	M12x1-Female, 4-pin, D-coded	M12x1-Female, 4-pin, D-coded	
Connection (COM 2)	M12x1-Female, 4-pin, D-coded	M12x1-Female, 4-pin, D-coded	
Connection (supply voltage IN)	7/8“-Male, 4-pin	7/8“-Male, 4-pin	
Connection (supply voltage OUT)	7/8“-Female, 4-pin	7/8“-Female, 4-pin	
Connection slots	8x M12x1-Female, 5-pin, A-coded	8x M12x1-Female, 5-pin, A-coded	
Digital inputs	16x PNP, Type 2	16x PNP, Type 3	
Digital outputs	—	16x PNP	
Configurable inputs/outputs	no	yes	
Output current max.	—	2 A	
Current sum US, sensor	9.0 A	9.0 A	
Current sum UA, actuator	—	9.0 A	
Housing material	Zinc, Die casting	PPS	
Dimension	68 x 37.9 x 224 mm	68 x 42.9 x 226 mm	
Ambient temperature	-5...70 °C	-5...70 °C	
IP rating	IP67	IP67	
Auxiliary interfaces	—	8x IO-Link	
IO-Link version	—	1.1	
Port-class	—	Type A	
Productview	Page 62	Page 63	

	BNI00CY BNI EIP-538-105-R015	BNI008Z BNI EIP-502-105-R015	BNI008P BNI EIP-302-105-R015	BNI008Y BNI EIP-104-105-R015
	Ethernet/IP	Ethernet/IP	Ethernet/IP	Ethernet/IP
	—	—	—	—
	18...30.2 VDC	18...30.2 VDC	18...30.2 VDC	18...30.2 VDC
	M12x1-Female, 4-pin, D-coded	M12x1-Female, 4-pin, D-coded	M12x1-Female, 4-pin, D-coded	M12x1-Female, 4-pin, D-coded
	M12x1-Female, 4-pin, D-coded	M12x1-Female, 4-pin, D-coded	M12x1-Female, 4-pin, D-coded	M12x1-Female, 4-pin, D-coded
	7/8“-Male, 4-pin	7/8“-Male, 4-pin	7/8“-Male, 4-pin	7/8“-Male, 4-pin
	7/8“-Female, 4-pin	7/8“-Female, 4-pin	7/8“-Female, 4-pin	7/8“-Female, 4-pin
	8x M12x1-Female, 5-pin, A-coded	8x M12x1-Female, 5-pin, A-coded	8x M12x1-Female, 5-pin, A-coded	8x M12x1-Female, 5-pin, A-coded
	12x PNP, Type 3	16x PNP, Type 3	16x PNP, Type 3	16x PNP, Type 3
	8x PNP	16x PNP	16x PNP	—
	yes	yes	yes	no
	2 A	2 A	2 A	—
	9.0 A	9.0 A	9.0 A	9.0 A
	9.0 A	9.0 A	9.0 A	—
	PPS	PPS	PPS	PPS
	68 x 42.9 x 226 mm	68 x 42.9 x 226 mm	68 x 42.9 x 226 mm	68 x 42.9 x 226 mm
	-5...70 °C	-5...70 °C	-5...70 °C	-5...70 °C
	IP67	IP67	IP67	IP67
	8x IO-Link	4x IO-Link	—	—
	1.1	1.1	—	—
	Type A (4x) + Type B (4x)	Type A	—	—
	Page 63	Page 64	Page 64	Page 65

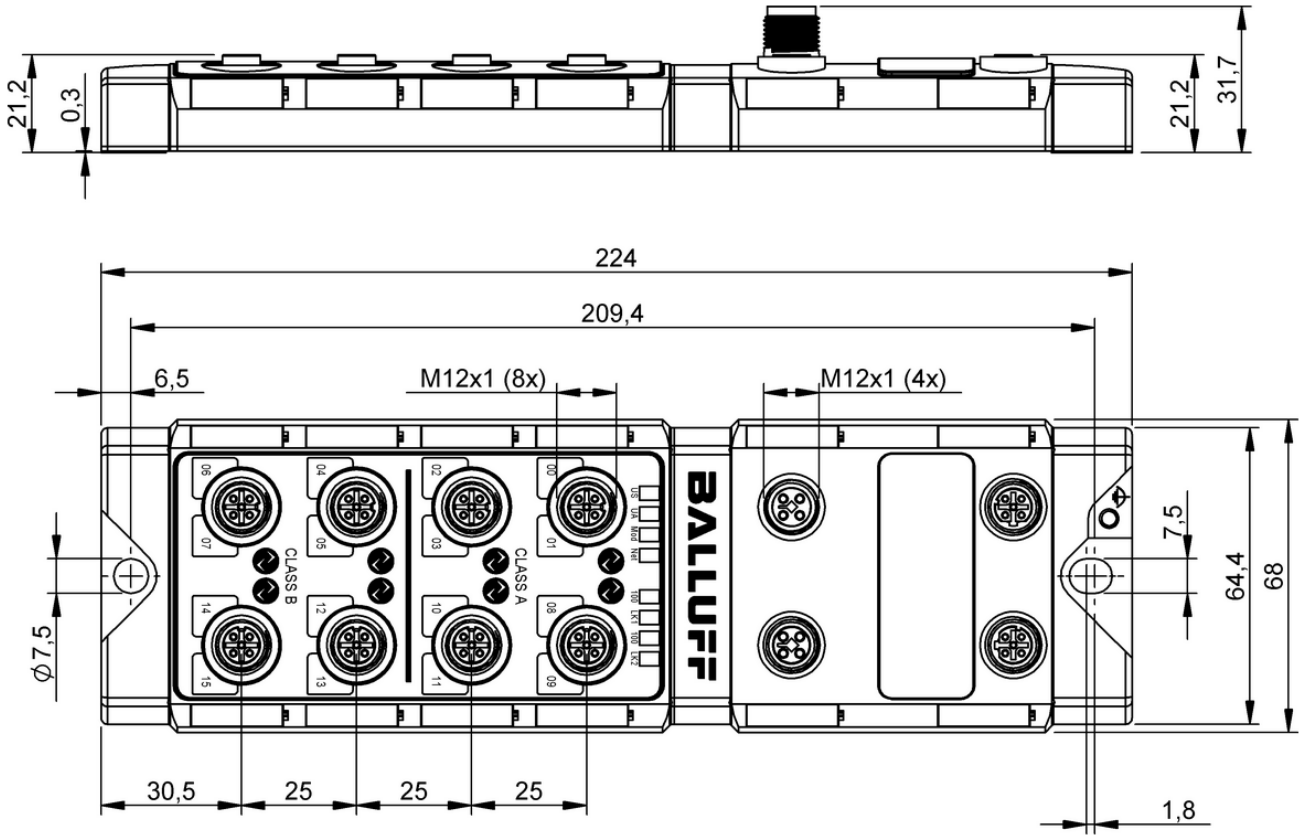

BNI00E1

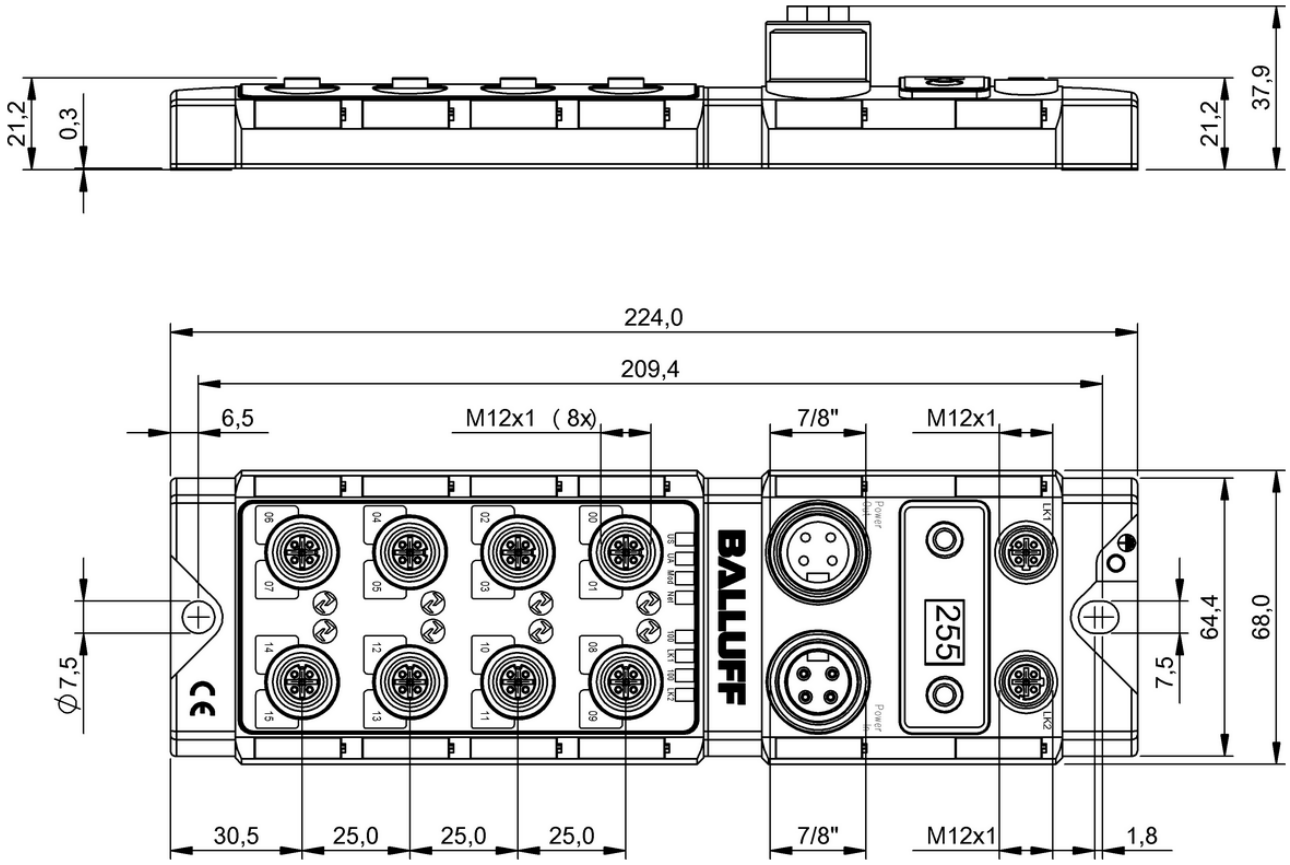

BNI006A

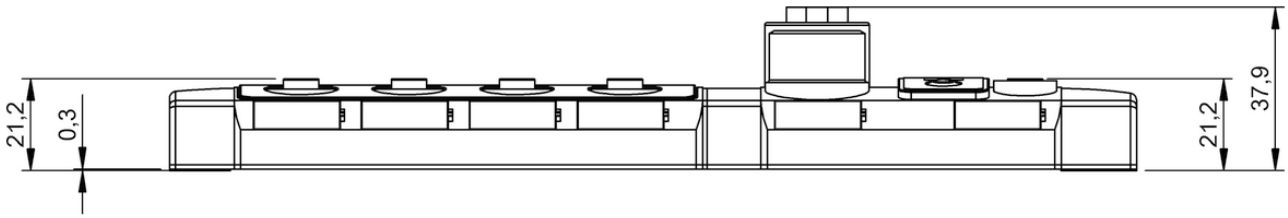

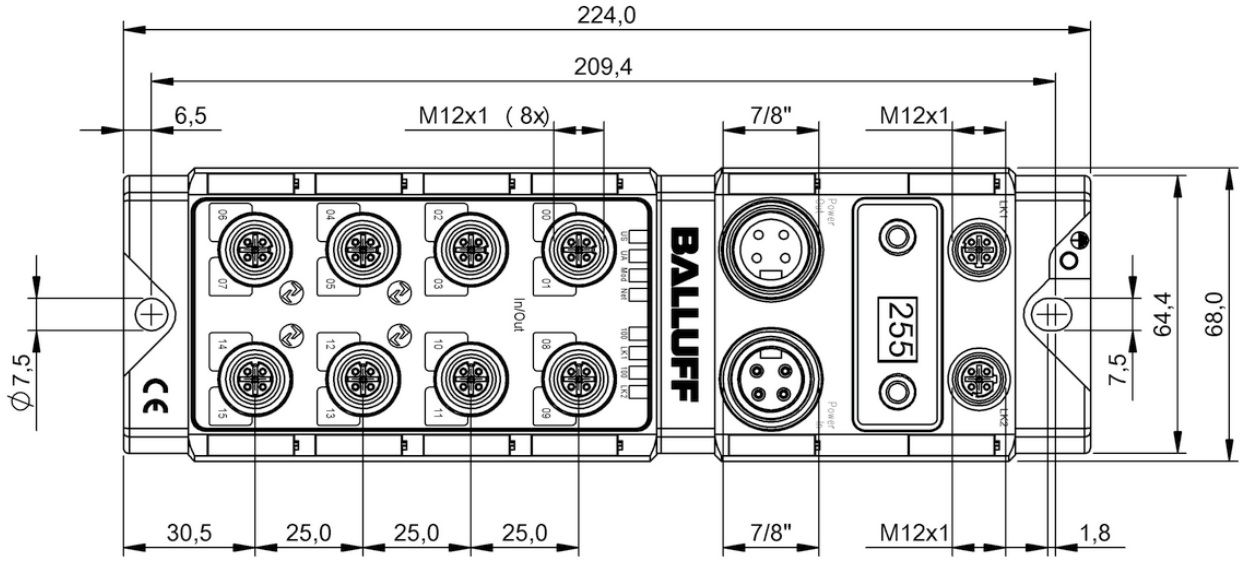

BNI004A

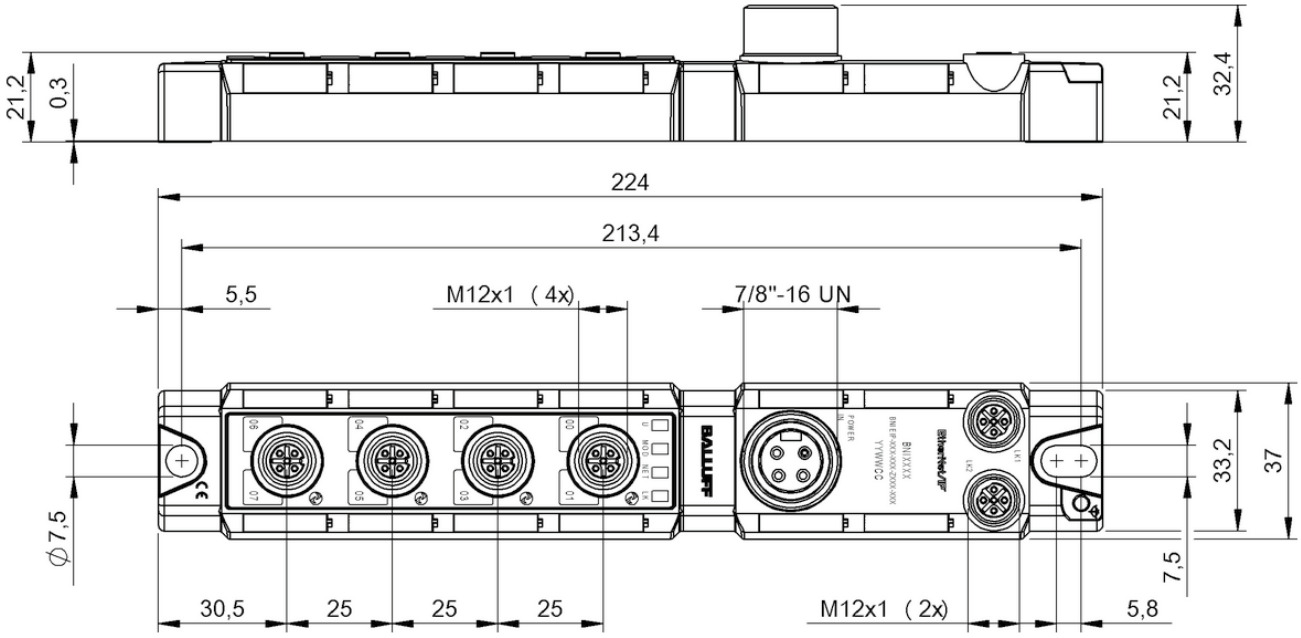

BNI009T, BNI00AA

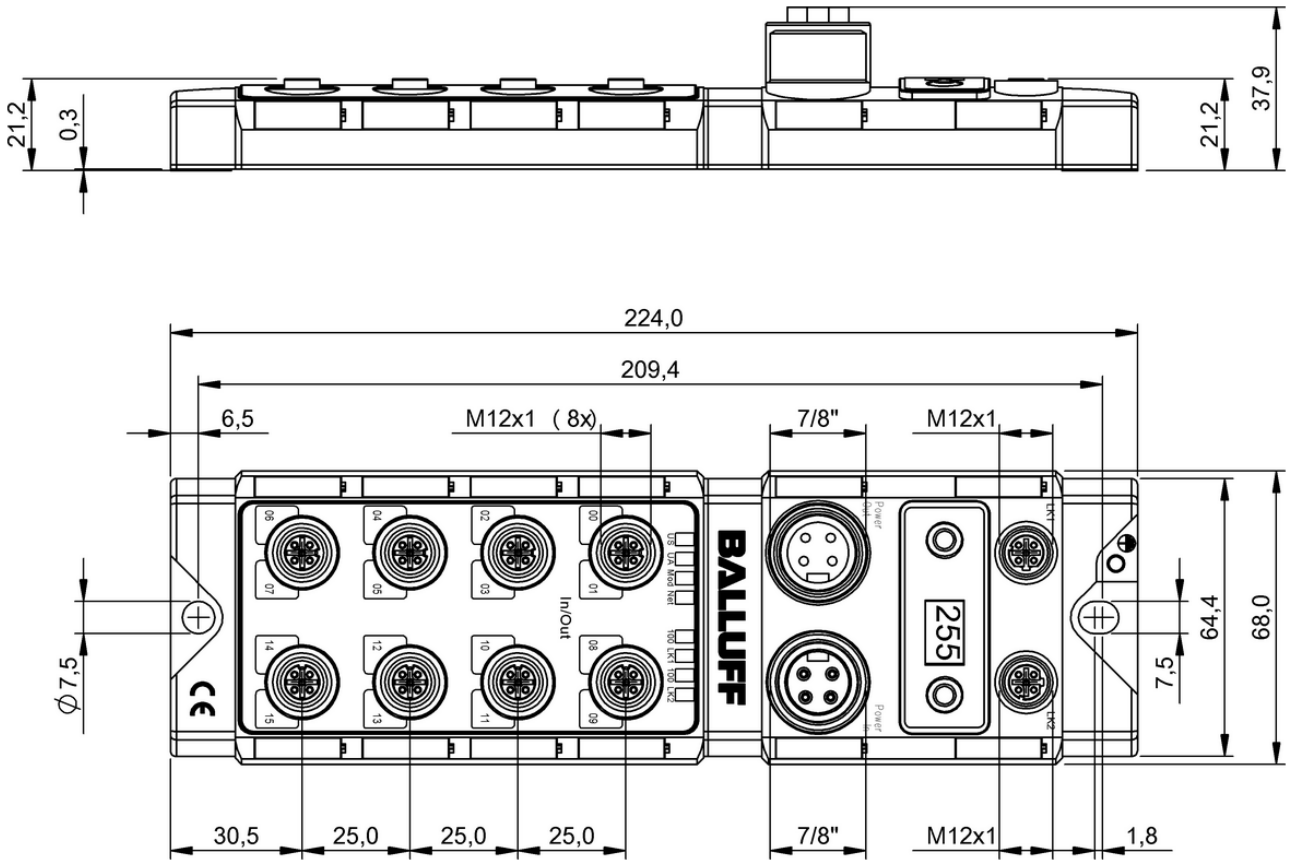

BNI004F

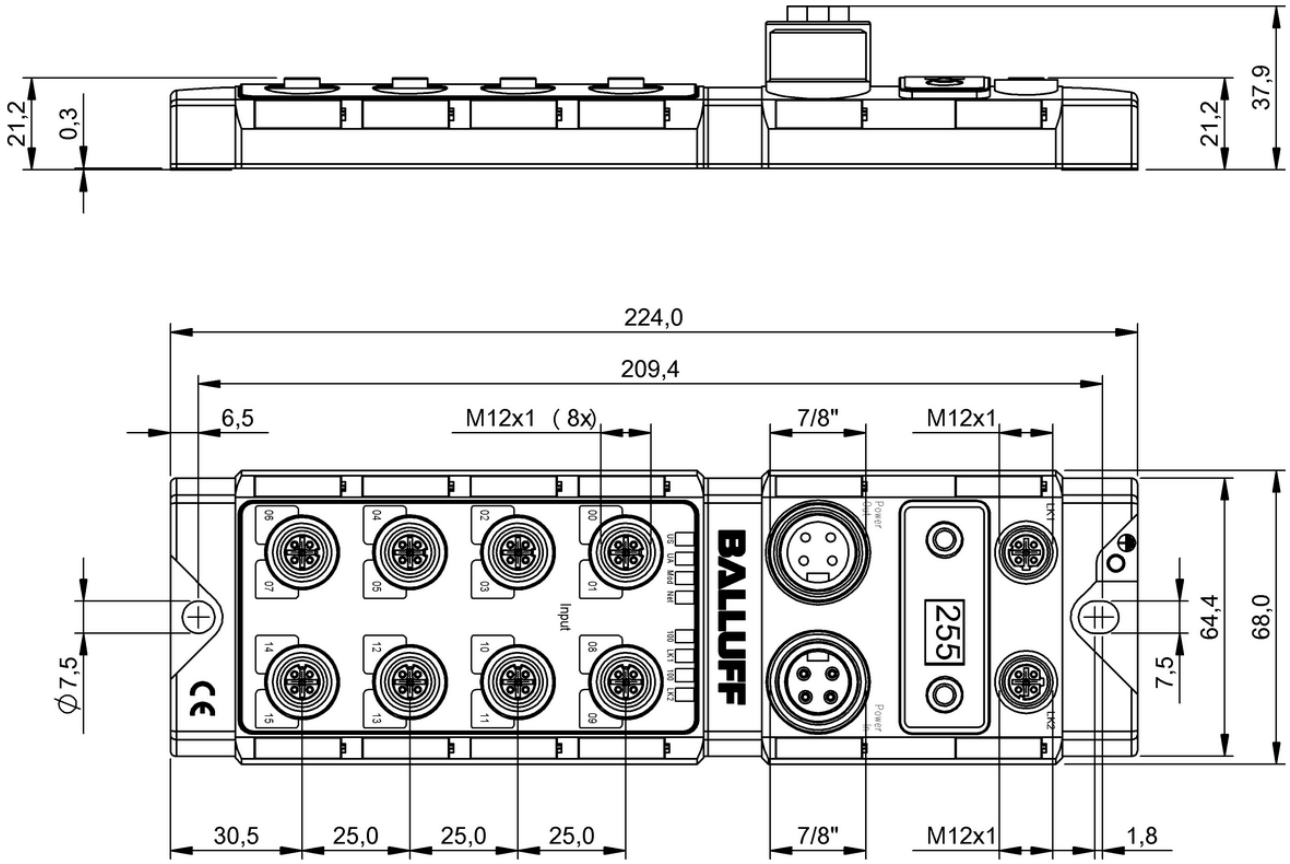

BNI004M

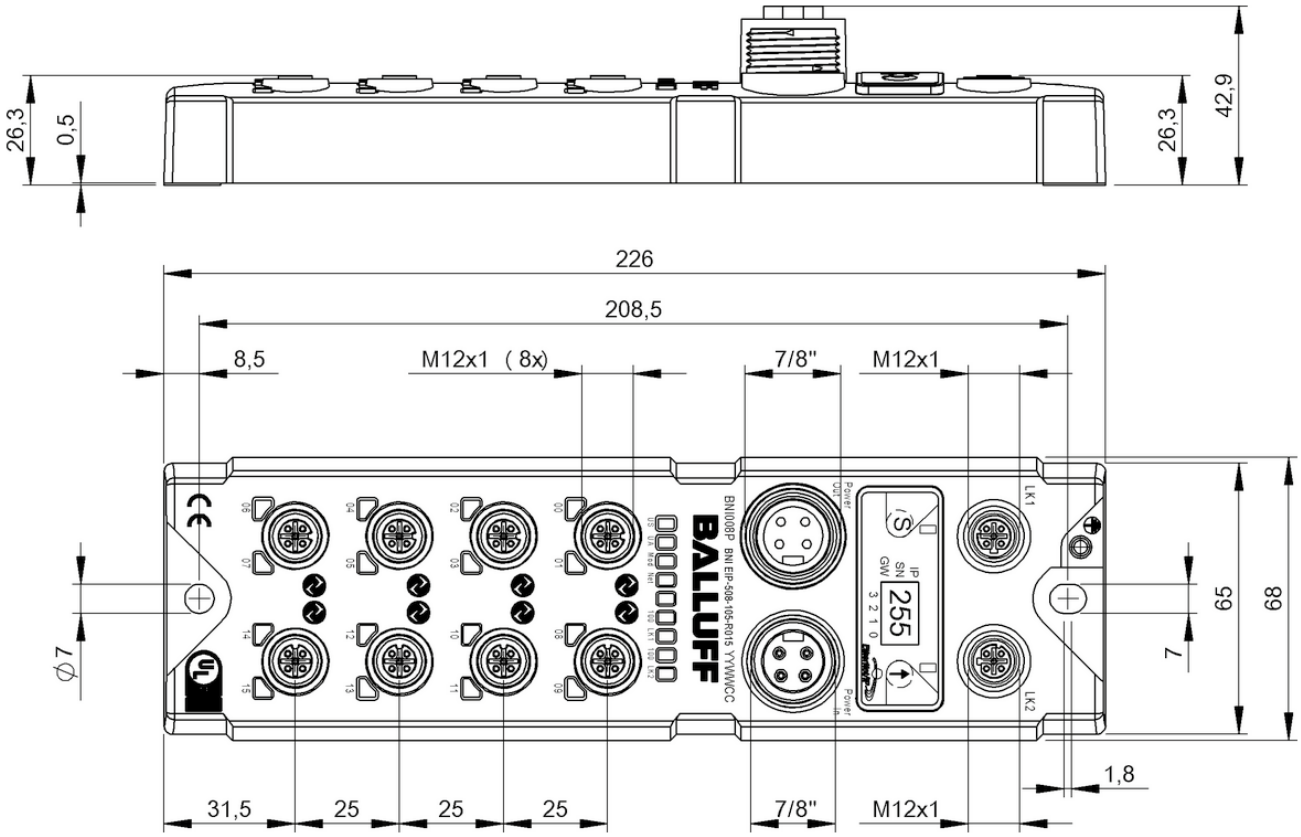

BNI008M

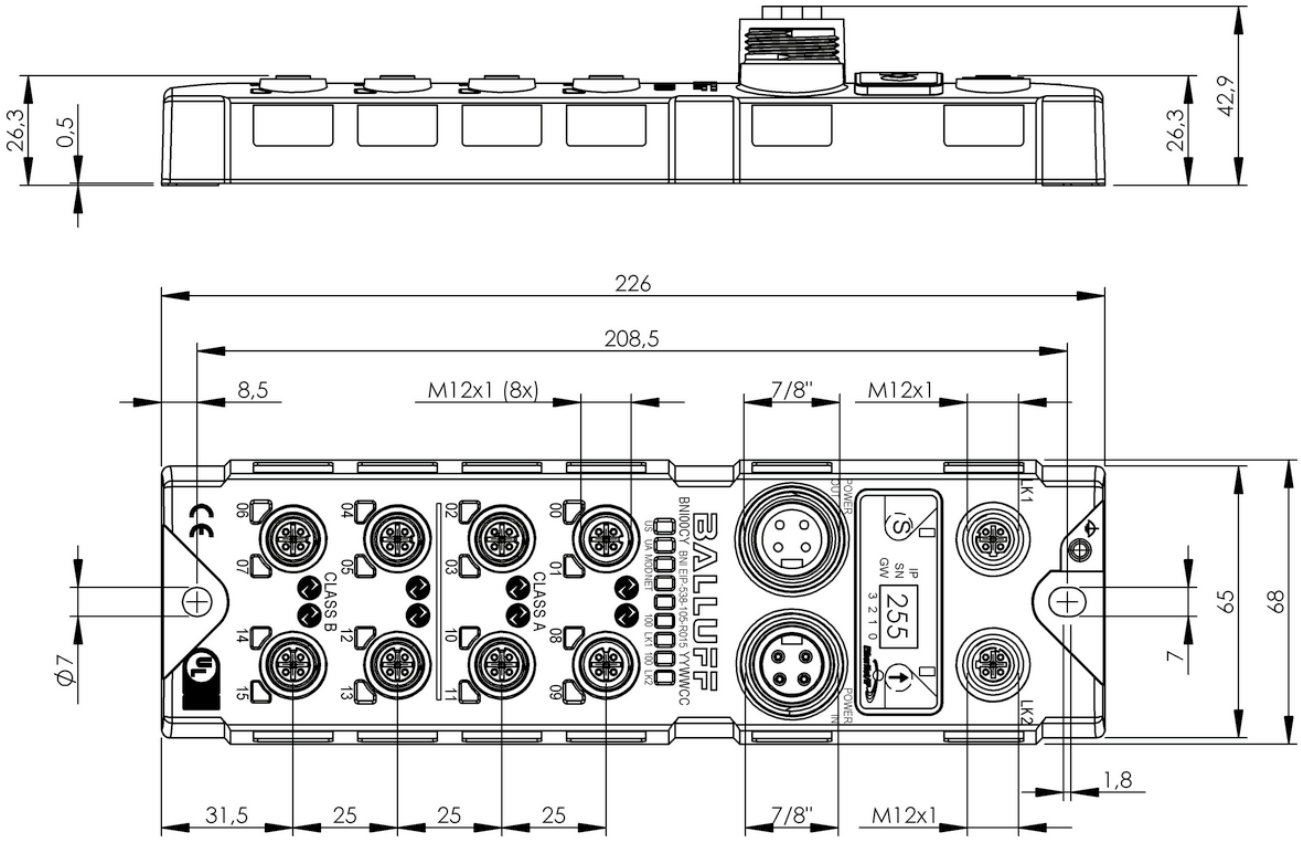

BNI00CY

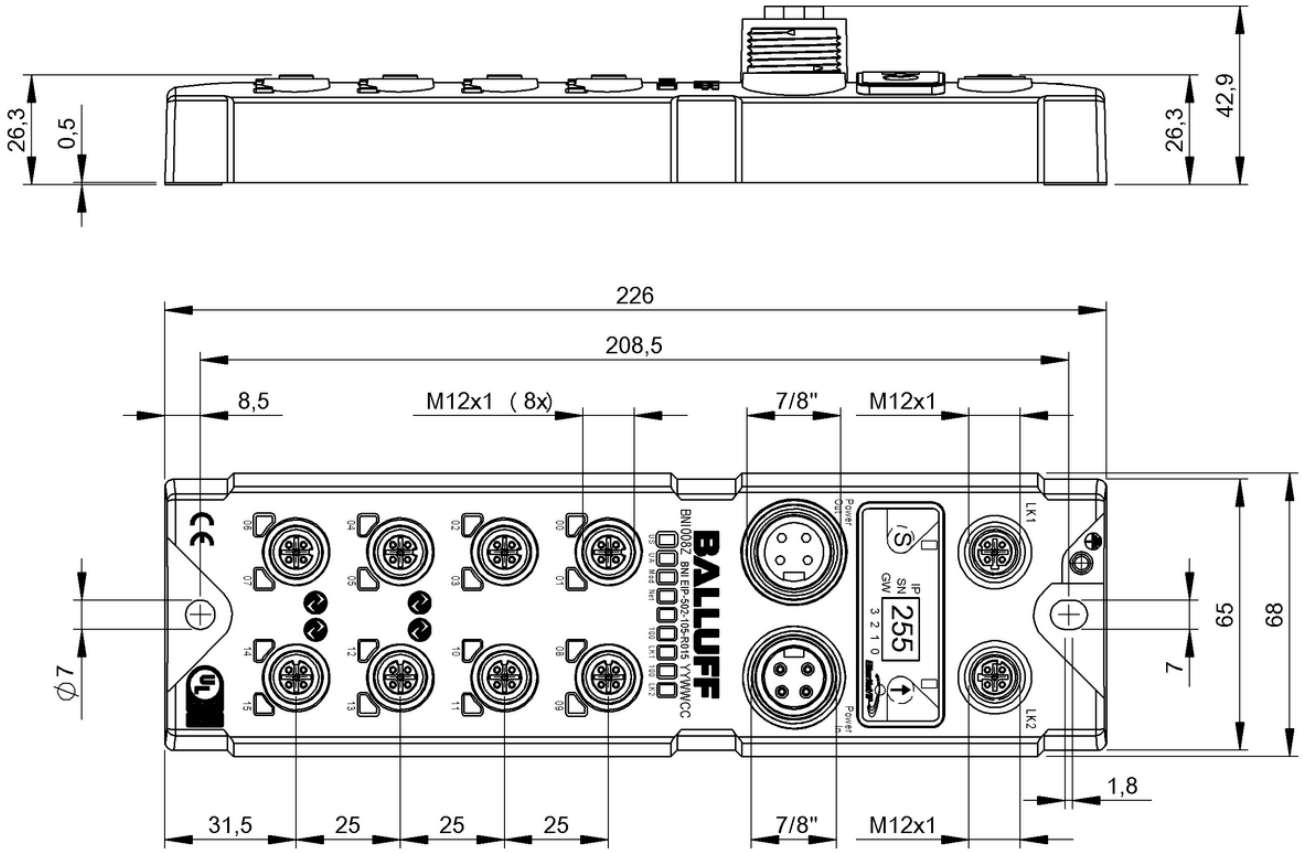

BNI008Z

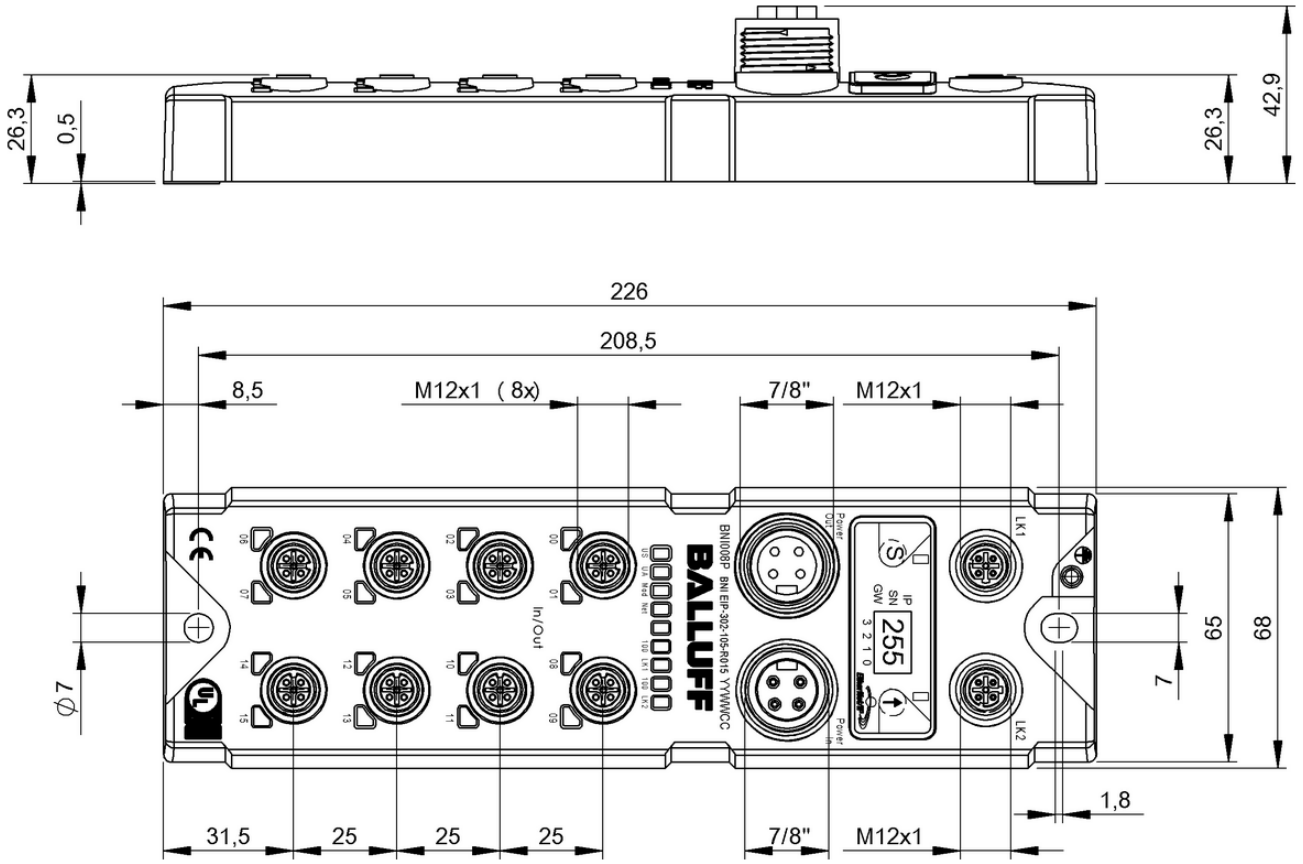

BNI008P

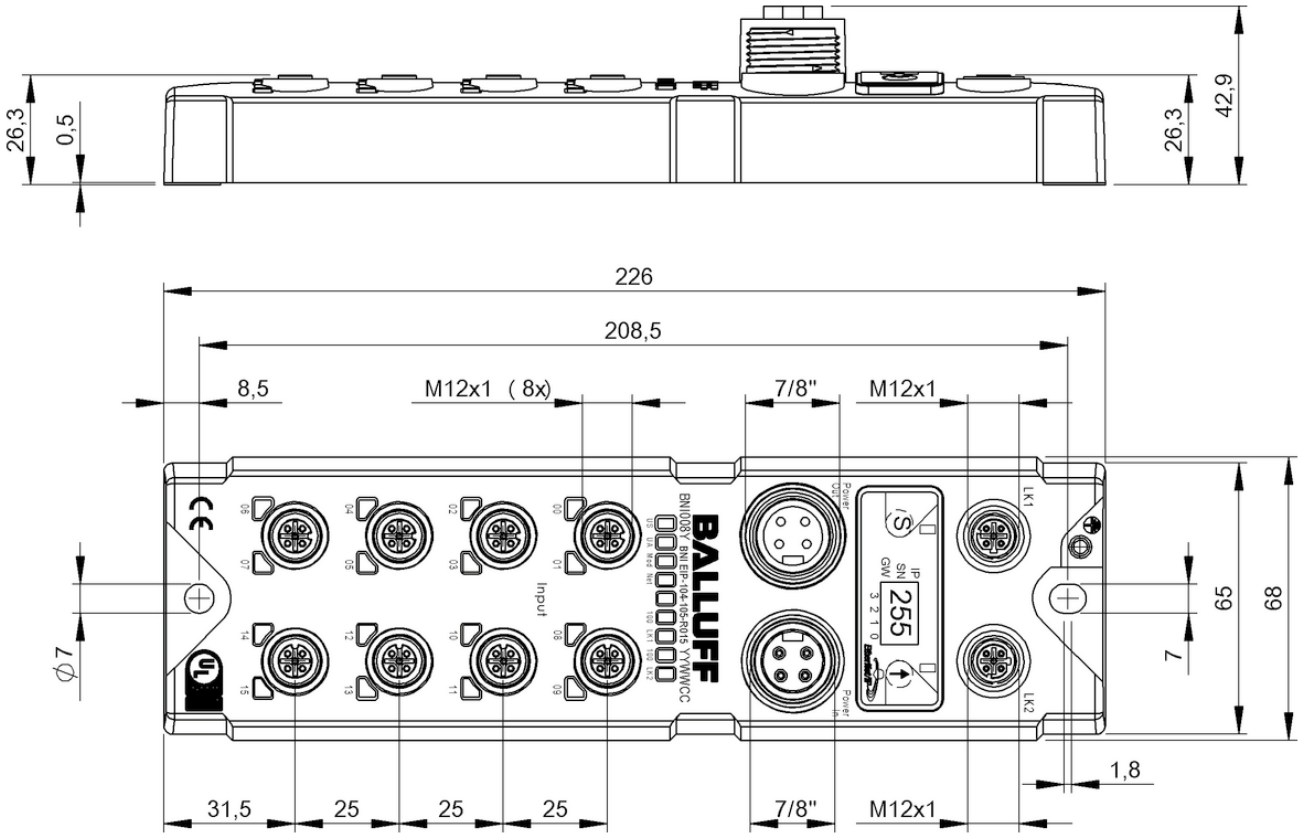
26,3
0,5
42,9
26,3
226
208,5
8,5
M12x1 (8x)
7/8"
M12x1
BALLUFF
BNI008Y BNI EIP-104-105-R015 YYWWCC
Input
Power Out
Power In
IP
SN
GW
255
LK1
LK2
65
68
7
ϕ7
1,8
31,5
25
25
25
7/8"
M12x1

BNI008Y

	BNI005A BNI DNT-502-100-Z001	
Interface	DeviceNet	
Fast Start-Up (FSU)	—	
Operating voltage Ub	18...30.2 VDC	
Connection (COM 1)	M12x1-Male, 5-pin, A-coded	
Connection (COM 2)	M12x1-Female, 5-pin, A-coded	
Connection (supply voltage IN)	7/8“-Male, 4-pin	
Connection (supply voltage OUT)	7/8“-Female, 4-pin	
Connection slots	8x M12x1-Female, 5-pin, A-coded	
Digital inputs	16x PNP, Type 2	
Digital outputs	16x PNP	
Configurable inputs/outputs	yes	
Output current max.	2 A	
Current sum US, sensor	9.0 A	
Current sum UA, actuator	9.0 A	
Housing material	Zinc, Die casting	
Dimension	68 x 37.9 x 224 mm	
Ambient temperature	-5...70 °C	
IP rating	IP67	
Auxiliary interfaces	4x IO-Link	
IO-Link version	1.1	
Port-class	Type A	
Productview	Page 68	

	BNI0003 BNI DNT-302-000-Z005	BNI0001 BNI DNT-104-000-Z004
	DeviceNet	DeviceNet
	—	—
	18...30.2 VDC	18...30.2 VDC
	7/8“-Male, 5-pin	7/8“-Male, 5-pin
	7/8“-Female, 5-pin	7/8“-Female, 5-pin
	7/8“-Male, 4-pin	7/8“-Male, 4-pin
	—	—
	8x M12x1-Female, 5-pin, A-coded	8x M12x1-Female, 5-pin, A-coded
	16x PNP, Type 2	16x PNP, Type 2
	16x PNP	—
	yes	no
	2 A	—
	9.0 A	9.0 A
	9.0 A	—
	Zinc, Die casting	Zinc, Die casting
	68 x 37.9 x 224 mm	68 x 37.9 x 224 mm
	-5...70 °C	-5...70 °C
	IP67	IP67
	—	—
	—	—
	—	—
	Page 68	Page 69

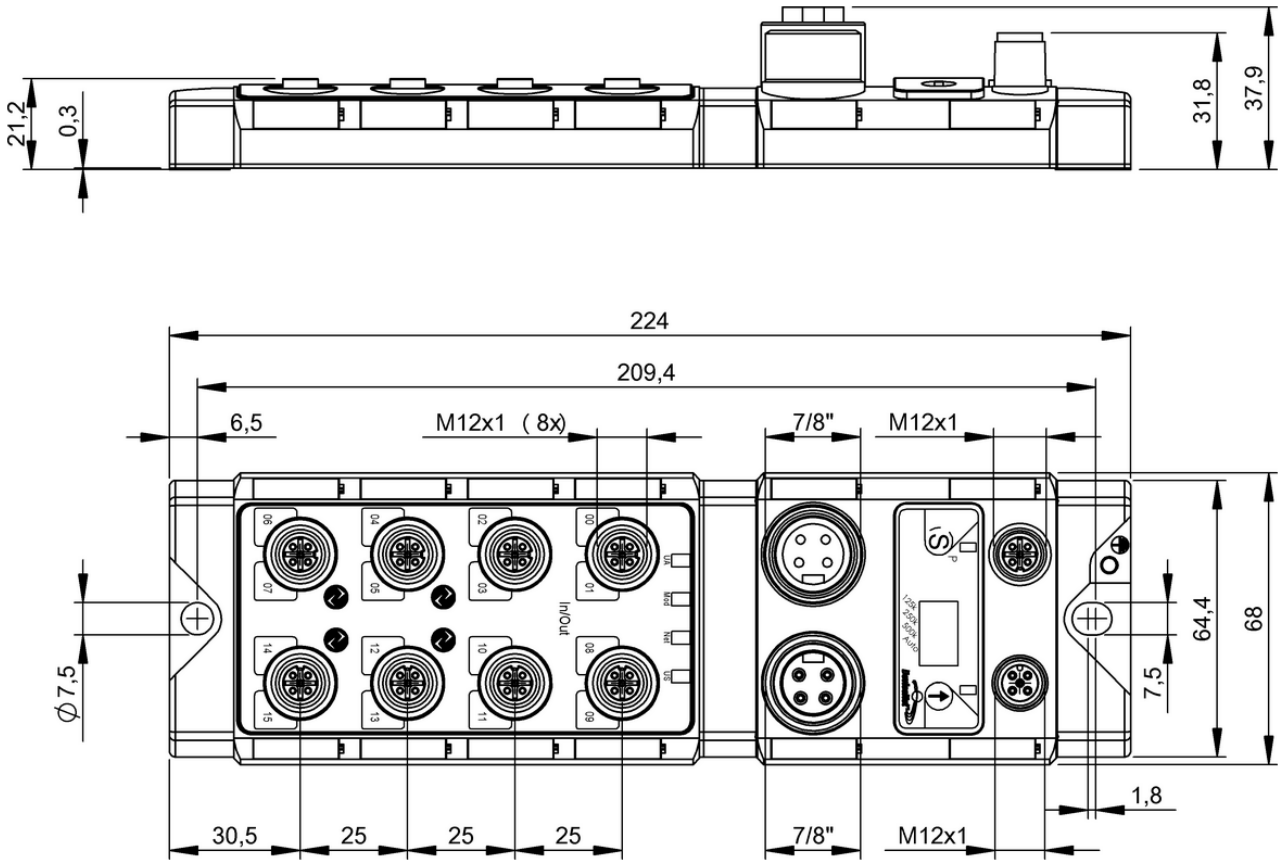

BNI005A

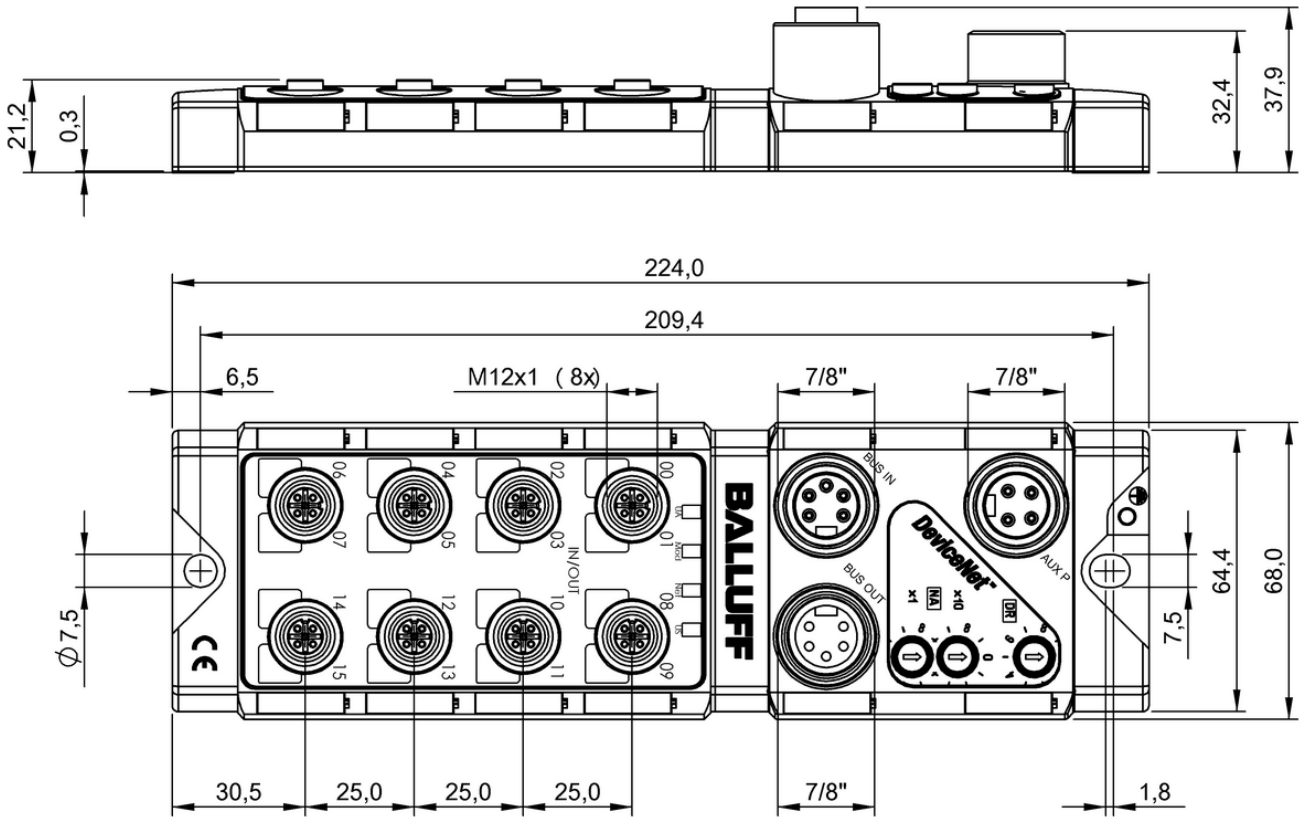

BNI0003

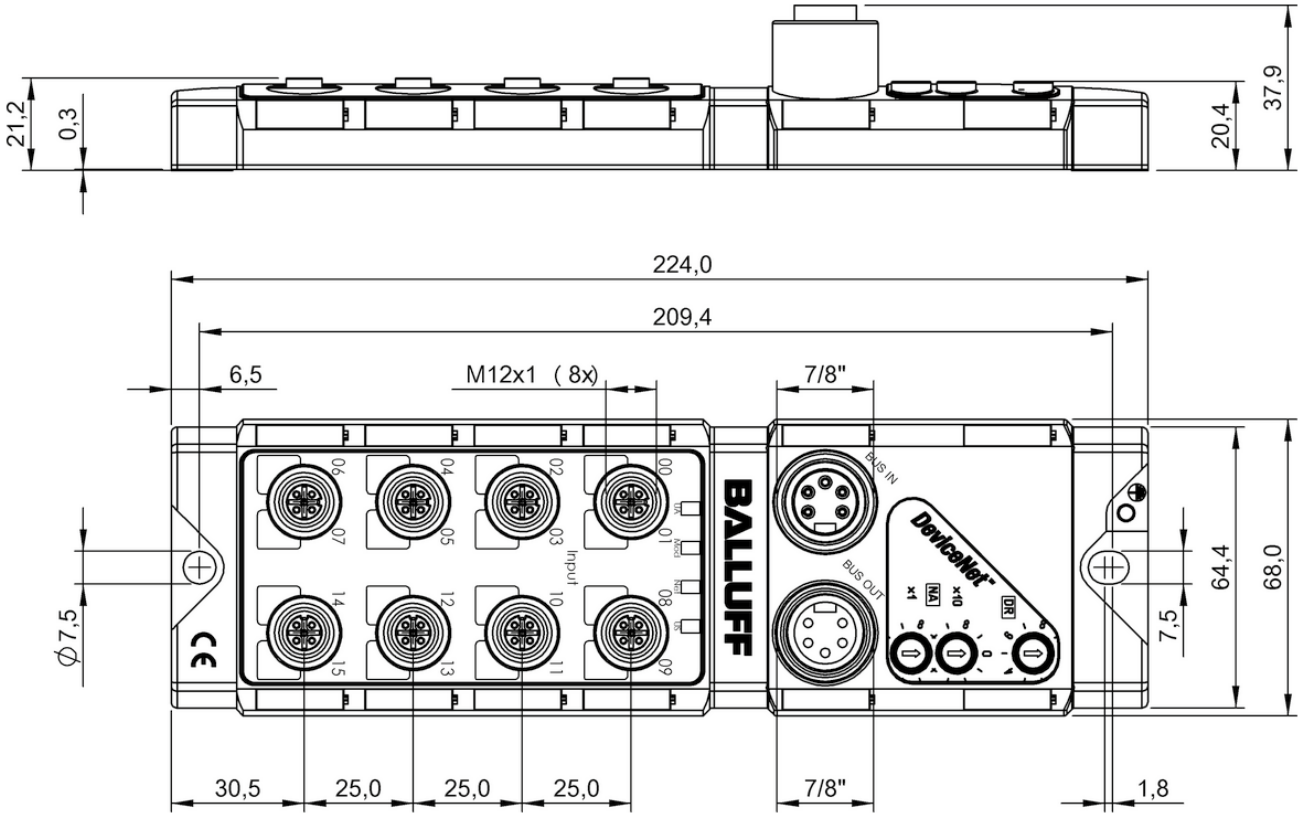
21,2
0,3
37,9
20,4
224,0
209,4
6,5
M12x1 (8x)
7/8"
BALLUFF
BUS IN
BUS OUT
DeviceNet
Input
64,4
68,0
7,5
ϕ7,5
30,5
25,0
25,0
25,0
7/8"
1,8

BNI0001

Interface	
Fast Start-Up (FSU)	
Operating voltage Ub	
Connection (COM 1)	
Connection (COM 2)	
Connection (supply voltage IN)	
Connection (supply voltage OUT)	
Connection slots	
Digital inputs	
Digital outputs	
Configurable inputs/outputs	
Output current max.	
Current sum US, sensor	
Current sum UA, actuator	
Housing material	
Dimension	
Ambient temperature	
IP rating	
Auxiliary interfaces	
IO-Link version	
Port-class	
Productview	

	BNI0077 BNI ECT-508-105-Z015	BNI009U BNI ECT-507-005-Z040
	EtherCAT	EtherCAT
	—	—
	18...30.2 VDC	18...30.2 VDC
	M12x1-Female, 5-pin, D-coded	M12x1-Female, 5-pin, D-coded
	M12x1-Female, 5-pin, D-coded	M12x1-Female, 5-pin, D-coded
	7/8“-Male, 5-pin	7/8“-Male, 5-pin
	7/8“-Female, 5-pin	—
	8x M12x1-Female, 5-pin, A-coded	4x M12x1-Female, 5-pin, A-coded
	16x PNP, Type 2	8x PNP, Type 3
	16x PNP	8x PNP
	yes	yes
	2 A	2 A
	9.0 A	9.0 A
	9.0 A	9.0 A
	Zinc, Die casting	Zinc, Die casting
	68 x 37.9 x 224 mm	37 x 32.6 x 224 mm
	-5...70 °C	-40...70 °C
	IP67	IP67
	8x IO-Link	4x IO-Link
	1.1	1.1
	Type A	Type A
	Seit 72	Seit 72

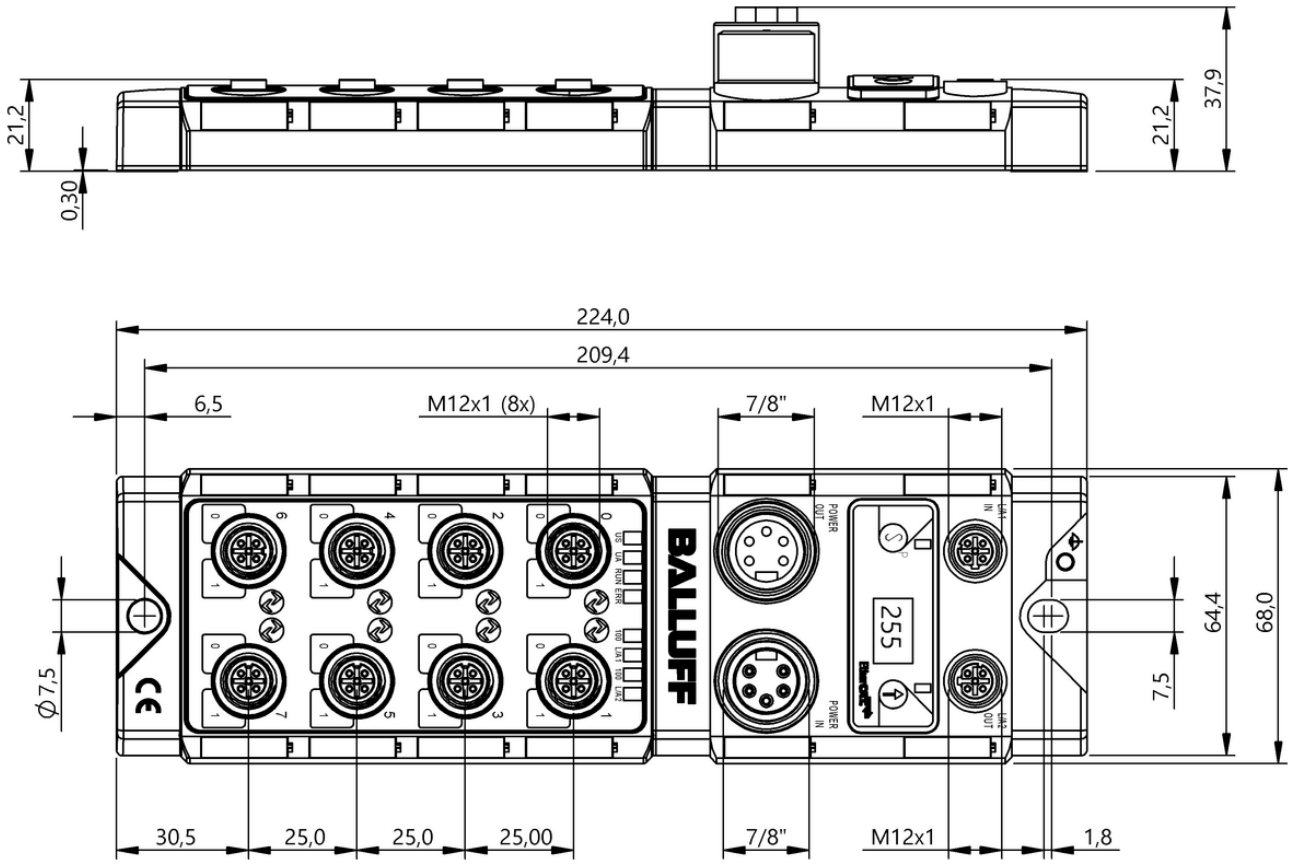

BNI0077

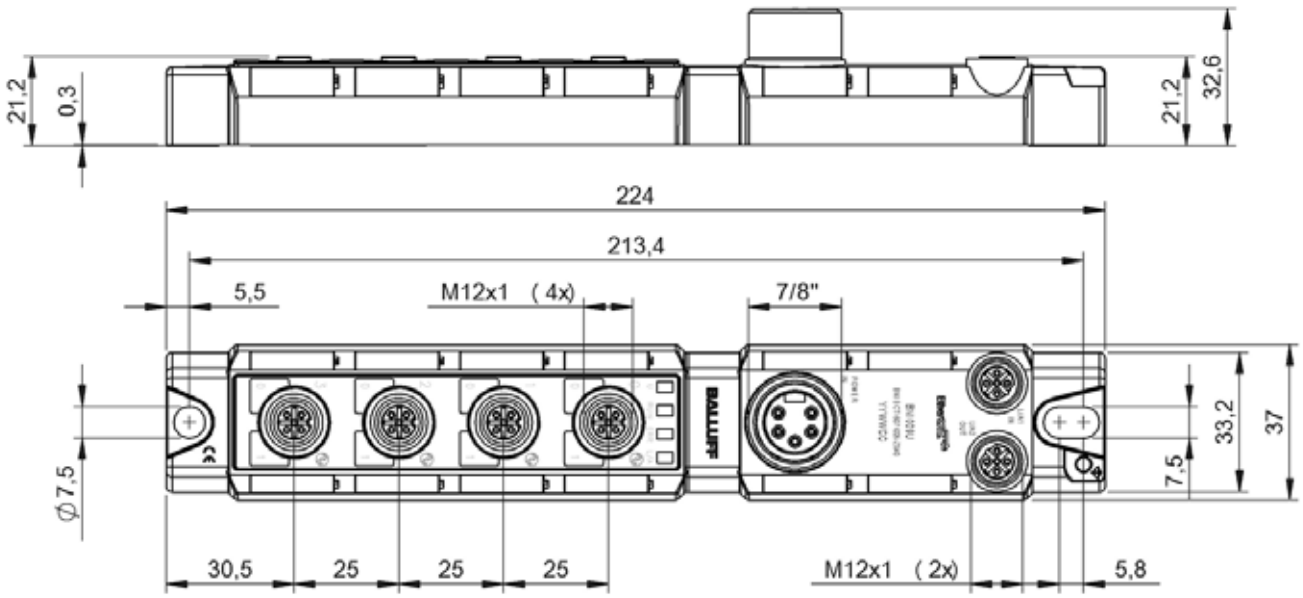

BNI009U

System solutions for
efficient network design

SWITCHES

Ethernet-based network systems are increasingly gaining significance in industrial automation. To enable you to easily link all Ethernet system components with Ethernet, Balluff provides you with a complete system. We offer you a multiplicity of Ethernet-based systems and network components for machine and system outfitting, including Profinet and Ethernet/IP. This means optimum infrastructure for complex networks.

Features

- Variety of Ethernet-based systems and network components
- Complete system for linking Ethernet system components with Ethernet

	BNI005E BNI TCP-951-000-E028	
Principle of operation	Active splitter	
Dimension	30 x 76.5 x 110 mm	
Mounting	DIN rail mount	
Housing material	Steel, coated	
Interface	Ethernet TCP/IP 10Base-T/100Base-TX	
Operating voltage Ub	12...48 VDC	
Connection slots	5x RJ45-Female, 8-pole	
Ambient temperature	-10...60 °C	
Protection degree	IP30	
Productview	Page 78	

	BNI0067 BNI TCP-952-000-E029	BNI000F BNI EIP-950-000-Z009
	Active splitter	Active splitter
	50 x 76.5 x 135 mm	68 x 32.4 x 224 mm
	DIN rail mount	2-hole screw mount
	Steel, coated	Zinc, die-cast
	Ethernet TCP/IP 10Base-T/100Base-TX	Ethernet TCP/IP 10Base-T/100Base-TX
	12...48 VDC	18...30.2 VDC
	8x RJ45-Female, 8-pole	8x M12x1-Female, 4-pole, D-coded
	-20...60 °C	-5...55 °C
	IP30	IP67
	Page 78	Page 79

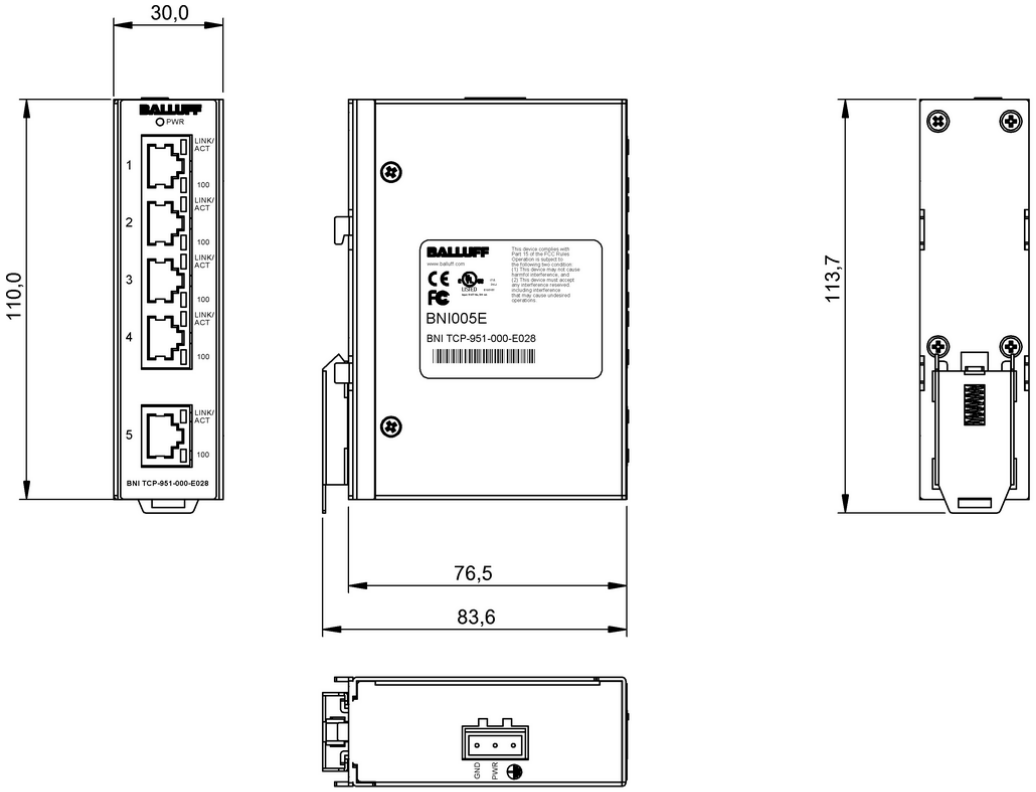

BNI005E

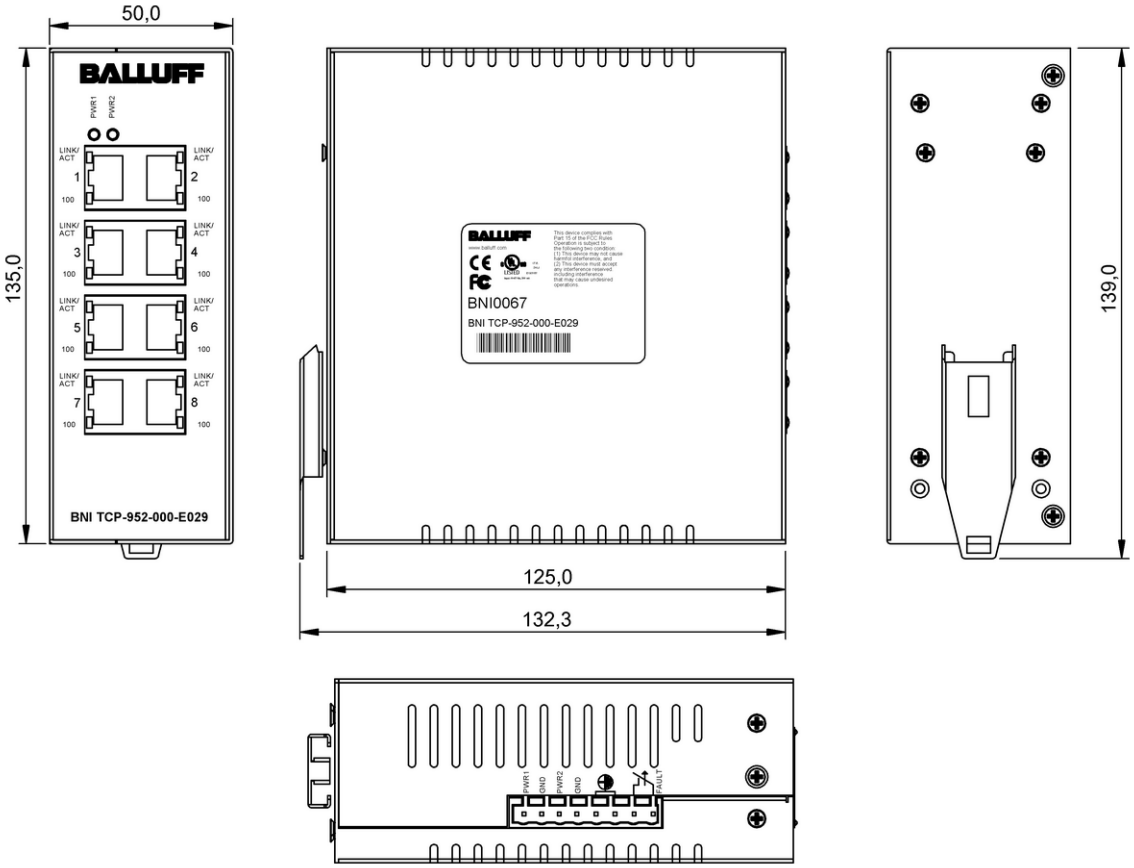

BNI0067

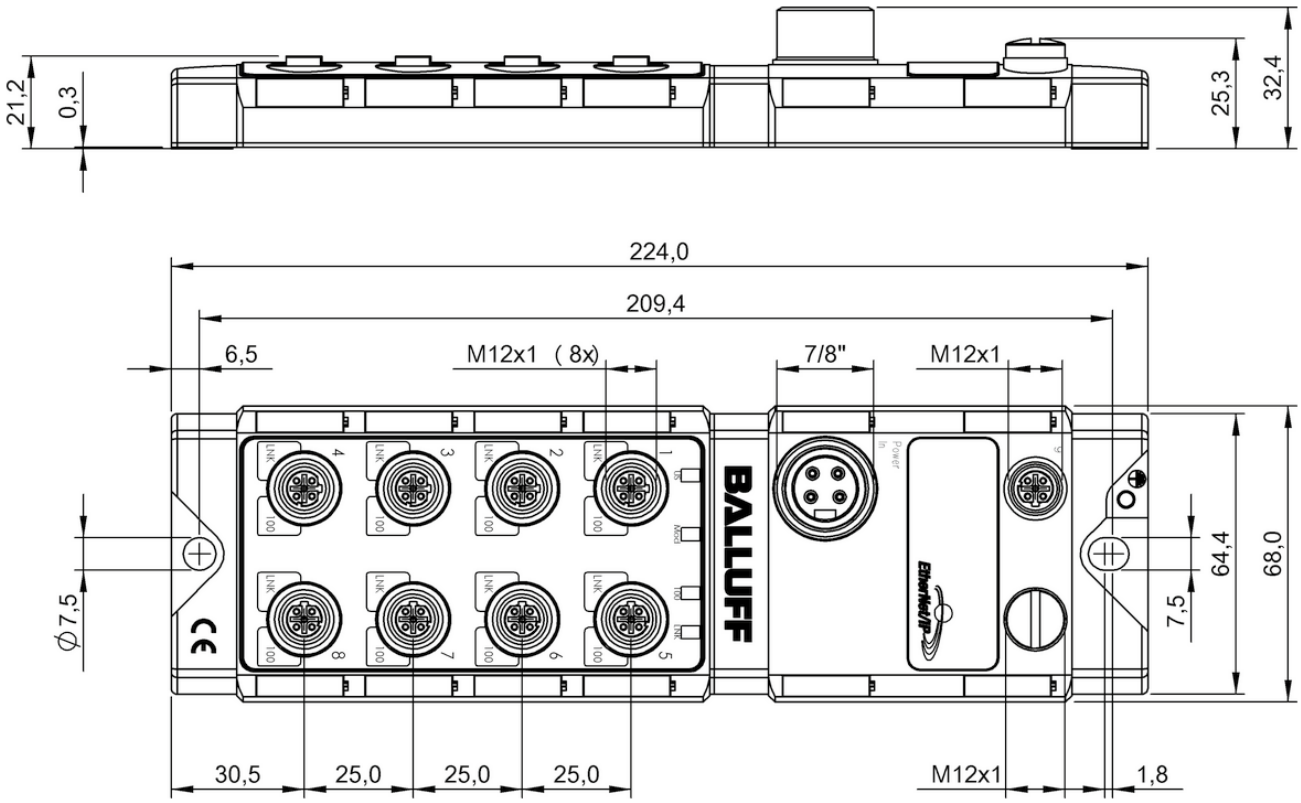
21,2
0,3
25,3
32,4
224,0
209,4
6,5
M12x1 (8x)
7/8"
M12x1
BALLUFF
Ø7,5
64,4
68,0
7,5
30,5
25,0
25,0
25,0
M12x1
1,8

BNI000F

**Reliable signal transmission,
even under extreme conditions**

I/O MODULES

I/O modules from Balluff connect binary and analog sensors and actuators to the control level via a bus. By using our modules you can significantly reduce the number of cables required. The Balluff I/O modules also offer additional functions for signal preprocessing and expanded diagnostic options. Various form factors and connection technologies provide solutions for a wide range of requirements – even under extreme ambient conditions.

Features

- Simple to install
- Efficient configuration
- Continuous diagnostics
- Individual solutions through a variety of designs and connection techniques
- Suitable for use under extreme conditions

	BNI0093 BNI IOL-309-002-Z019	BNI0099 BNI IOL-102-002-Z019	BNI00AU BNI IOL-302-002-Z046
Interface	IO-Link 1.1	IO-Link 1.1	IO-Link 1.1
Operating voltage Ub	18...30.2 VDC	18...30.2 VDC	18...30.2 VDC
Connection (COM 1)	M12x1-Male, 4-pin, A-coded	M12x1-Male, 4-pin, A-coded	M12x1-Male, 4-pin, A-coded
Connection (supply voltage IN)	—	—	—
Connection slots	8x M8x1-Female, 3-pin	8x M8x1-Female, 3-pin	16x M8x1-Female, 3-pin
Digital inputs	8x PNP, Type 3	8x PNP, Type 3	16x PNP, Type 3
Digital outputs	8x PNP	—	16x PNP
Analog inputs	—	—	—
Configurable inputs/outputs	yes	no	yes
Extension port	yes	yes	yes
Single-channel monitoring	—	—	—
Additional function	—	—	—
Current sum US, sensor	4 A	4 A	4 A
Current sum UA, actuator	4 A	—	4 A
Switching current	8x 300 mA	—	16x 300 mA
Housing material	Zinc, Die casting, nickel plated	Zinc, Die casting	Zinc, Die casting, nickel plated
Dimension	30 x 32.8 x 132 mm	30 x 32.8 x 132 mm	30 x 32.8 x 220 mm
Ambient temperature	-5...70 °C	-5...70 °C	-5...70 °C
IP rating	IP67, when threaded in	IP67, when threaded in	IP67, when threaded in
Transfer rate	COM2 (38.4 kBaud)	COM2 (38.4 kBaud)	COM2 (38.4 kBaud)
Process data cycle min.	3.5 ms	3.2 ms	4.0 ms
Process data IN	1 bytes	1 bytes	2 bytes
Process data OUT	1 bytes	—	2 bytes
Productview	Page 94	Page 94	Page 94

	BNI00AY BNI IOL-104-002-Z046	**BNI000R** BNI IOL-102-000-K019	**BNI001Y** BNI IOL-102-S01-K019	**BNI0021** BNI IOL-104-000-K021	**BNI0022** BNI IOL-104-S01-K021
	IO-Link 1.1	IO-Link 1.0	IO-Link 1.0	IO-Link 1.0	IO-Link 1.0
	18...30.2 VDC	18...30.2 VDC	18...30.2 VDC	18...30.2 VDC	18...30.2 VDC
	M12x1-Male, 4-pin, A-coded	M12x1-Male, 4-pin, A-coded	M12x1-Male, 4-pin, A-coded	M12x1-Male, 4-pin, A-coded	M12x1-Male, 4-pin, A-coded
	—	—	—	—	—
	16x M8x1-Female, 3-pin	8x M8x1-Female, 3-pin	8x M8x1-Female, 3-pin	8x M8x1-Female, 4-pin	8x M8x1-Female, 4-pin
	16x PNP, Type 3	8x PNP, Type 2	8x PNP, Type 2	16x PNP, Type 2	16x PNP, Type 2
	—	—	—	—	—
	—	—	—	—	—
	no	no	no	no	no
	yes	—	—	—	—
	—	—	yes	—	yes
	—	—	—	—	—
	4 A	4 A	4 A	4 A	4 A
	—	—	—	—	—
	—	—	—	—	—
	Zinc, Die casting, nickel plated	PBT, GF	PBT, GF	PBT, GF	PBT, GF
	30 x 32.8 x 220 mm	30 x 24 x 129.5 mm	30 x 24 x 129.5 mm	30 x 24 x 129.5 mm	30 x 24 x 129.5 mm
	-5...70 °C	-5...55 °C	-5...55 °C	-5...55 °C	-5...55 °C
	IP67, when threaded in	IP67, when threaded in	IP67, when threaded in	IP67, when threaded in	IP67, when threaded in
	COM2 (38.4 kBaud)	COM2 (38.4 kBaud)	COM2 (38.4 kBaud)	COM2 (38.4 kBaud)	COM2 (38.4 kBaud)
	3.5 ms	2.5 ms	2.5 ms	2.5 ms	10 ms
	2 bytes	1 bytes	2 bytes	2 bytes	4 bytes
	—	—	—	—	—
	Page 95	Page 95	Page 95	Page 96	Page 96

	BNI000P BNI IOL-101-000-K018	BNI001W BNI IOL-101-S01-K018	BNI00CN BNI IOL-302-S02-Z012
Interface	IO-Link 1.0	IO-Link 1.0	IO-Link 1.1
Operating voltage Ub	18...30.2 VDC	18...30.2 VDC	18...30.2 VDC
Connection (COM 1)	M12x1-Male, 4-pin, A-coded	M12x1-Male, 4-pin, A-coded	M12x1-Male, 4-pin, A-coded
Connection (supply voltage IN)	—	—	—
Connection slots	4x M8x1-Female, 3-pin	4x M8x1-Female, 3-pin	8x M12x1-Female, 5-pin, A-coded
Digital inputs	4x PNP, Type 2	4x PNP, Type 2	16x PNP, Type 3
Digital outputs	—	—	16x PNP
Analog inputs	—	—	—
Configurable inputs/outputs	no	no	yes
Extension port	—	—	yes
Single-channel monitoring	—	yes	yes
Additional function	—	—	—
Current sum US, sensor	4 A	4 A	4 A
Current sum UA, actuator	—	—	4 A
Switching current	—	—	16x 200 mA
Housing material	PBT, GF	PBT, GF	Zinc, Die casting
Dimension	30 x 24 x 85.5 mm	30 x 24 x 85.5 mm	68 x 31.8 x 181.5 mm
Ambient temperature	-5...55 °C	-5...55 °C	-5...55 °C
IP rating	IP67, when threaded in	IP67, when threaded in	IP67, when threaded in
Transfer rate	COM2 (38.4 kBaud)	COM2 (38.4 kBaud)	COM2 (38.4 kBaud)
Process data cycle min.	2.5 ms	2.5 ms	6.2 ms
Process data IN	1 bytes	2 bytes	8 bytes
Process data OUT	—	—	2 bytes
Productview	Page 96	Page 96	Page 97

	BNI00CR BNI IOL-104-S02-Z012	BNI0063 BNI IOL-106-000-Z012	BNI0062 BNI IOL-106-S01-Z012	BNI0061 BNI IOL-106-S01-Z012-C01	BNI00AJ BNI IOL-719-002-Z012
	IO-Link 1.1	IO-Link 1.1	IO-Link 1.1	IO-Link 1.1	IO-Link 1.1
	18...30.2 VDC	18...30.2 VDC	18...30.2 VDC	18...30.2 VDC	18...30.2 VDC
	M12x1-Male, 4-pin, A-coded	M12x1-Male, 4-pin, A-coded	M12x1-Male, 4-pin, A-coded	M12x1-Male, 4-pin, A-coded	M12x1-Male, 4-pin, A-coded
	—	—	—	—	—
	8x M12x1-Female, 5-pin, A-coded	8x M12x1-Female, 5-pin, A-coded	8x M12x1-Female, 5-pin, A-coded	8x M12x1-Female, 5-pin, A-coded	8x M12x1-Female, 5-pin, A-coded
	16x PNP, Type 3	16x NPN, Type 2	16x NPN, Type 2	16x NPN, Type 2	—
	—	—	—	—	—
	—	—	—	—	8x Analog, voltage/analog, current/analog, temperature (0…10 V/-10…10 V/0…5 V/-5…5 V/5...10 V/4…20 mA/0…20 mA/ Pt100/Pt1000/Thermocouple Type J/Thermocouple Type K)
	no	no	no	no	no
	yes	—	—	—	—
	yes	—	yes	yes	—
	—	—	—	Identification 2 bytes	—
	4 A	4 A	4 A	4 A	4 A
	4 A	—	—	—	4 A
	—	—	—	—	—
	Zinc, Die casting	Zinc, Die casting	Zinc, Die casting	Zinc, Die casting	Zinc, Die casting
	68 x 31.8 x 181.5 mm	68 x 31.8 x 181.5 mm	68 x 31.8 x 181.5 mm	68 x 31.8 x 181.5 mm	68 x 31.8 x 181.5 mm
	-5...55 °C	-5...70 °C	-5...70 °C	-5...70 °C	-5...70 °C
	IP67, when threaded in	IP67, when threaded in	IP67, when threaded in	IP67, when threaded in	IP67, when threaded in
	COM2 (38.4 kBaud)	COM2 (38.4 kBaud)	COM2 (38.4 kBaud)	COM2 (38.4 kBaud)	COM2 (38.4 kBaud)
	4.4 ms	3.0 ms	3.5 ms	4.0 ms	55 ms
	4 bytes	2 bytes	4 bytes	6 bytes	22 bytes
	—	—	—	—	1 bytes
	Page 97	Page 97	Page 97	Page 97	Page 98

	BNI003U BNI IOL-302-000-Z012	BNI0032 BNI IOL-104-000-Z012	BNI003T BNI IOL-104-S01-Z012-C01
Interface	IO-Link 1.0	IO-Link 1.0	IO-Link 1.0
Operating voltage Ub	18...30.2 VDC	18...30.2 VDC	18...30.2 VDC
Connection (COM 1)	M12x1-Male, 4-pin, A-coded	M12x1-Male, 4-pin, A-coded	M12x1-Male, 4-pin, A-coded
Connection (supply voltage IN)	—	—	—
Connection slots	8x M12x1-Female, 5-pin, A-coded	8x M12x1-Female, 5-pin, A-coded	8x M12x1-Female, 5-pin, A-coded
Digital inputs	16x PNP, Type 2	16x PNP, Type 2	16x PNP, Type 2
Digital outputs	16x PNP	—	—
Analog inputs	—	—	—
Configurable inputs/outputs	yes	no	no
Extension port	—	—	—
Single-channel monitoring	—	—	yes
Additional function	—	—	Identification 2 bytes
Current sum US, sensor	4 A	4 A	4 A
Current sum UA, actuator	4 A	—	—
Switching current	16x 500 mA	—	—
Housing material	Zinc, Die casting	Zinc, Die casting	Zinc, Die casting
Dimension	68 x 31.8 x 181.5 mm	68 x 31.8 x 181.5 mm	68 x 31.8 x 181.5 mm
Ambient temperature	-5...70 °C	-5...70 °C	-5...70 °C
IP rating	IP67, when threaded in	IP67, when threaded in	IP67, when threaded in
Transfer rate	COM2 (38.4 kBaud)	COM2 (38.4 kBaud)	COM2 (38.4 kBaud)
Process data cycle min.	12 ms	3.0 ms	18 ms
Process data IN	2 bytes	2 bytes	6 bytes
Process data OUT	2 bytes	—	—
Productview	Page 98	Page 97	Page 97

	BNI005P BNI IOL-104-S01-Z012-C02	BNI0031 BNI IOL-102-000-Z012	BNI00CM BNI IOL-302-002-Z042	BNI0046 BNI IOL-302-S02-Z013	BNI0035 BNI IOL-302-000-Z013
	IO-Link 1.0	IO-Link 1.0	IO-Link 1.1	IO-Link 1.1	IO-Link 1.0
	18...30.2 VDC	18...30.2 VDC	18...30.2 VDC	18...30.2 VDC	18...30.2 VDC
	M12x1-Male, 4-pin, A-coded	M12x1-Male, 4-pin, A-coded	M12x1-Male, 4-pin, A-coded	M12x1-Male, 4-pin, A-coded	M12x1-Male, 4-pin, A-coded
	—	—	—	7/8“-Male, 5-pin	7/8“-Male, 5-pin
	8x M12x1-Female, 5-pin, A-coded	8x M12x1-Female, 5-pin, A-coded	8x M12x1-Female, 5-pin, A-coded	8x M12x1-Female, 5-pin, A-coded	8x M12x1-Female, 5-pin, A-coded
	16x PNP, Type 2	8x PNP, Type 2	16x PNP, Type 3	16x PNP, Type 3	16x PNP, Type 2
	—	—	16x PNP	16x PNP	16x PNP
	—	—	—	—	—
	no	no	yes	yes	yes
	—	—	yes	yes	—
	yes	—	—	yes	—
	Identification 4 bytes	—	—	—	—
	4 A	4 A	4 A	9.0 A	9.0 A
	—	—	4 A	9.0 A	9.0 A
	—	—	16x 2 A	16x 2 A	16x 2 A
	Zinc, Die casting	Zinc, Die casting	Zinc, Die casting	Zinc, Die casting	Zinc, Die casting
	68 x 31.8 x 181.5 mm	68 x 31.8 x 181.5 mm	68 x 31.8 x 181.5 mm	68 x 32.4 x 181.5 mm	68 x 32.4 x 181.5 mm
	-5...70 °C	-5...70 °C	-5...55 °C	-5...55 °C	-5...70 °C
	IP67, when threaded in	IP67, when threaded in	IP67, when threaded in	IP67, when threaded in	IP67, when threaded in
	COM2 (38.4 kBaud)	COM2 (38.4 kBaud)	COM2 (38.4 kBaud)	COM2 (38.4 kBaud)	COM2 (38.4 kBaud)
	24 ms	3.0 ms	4.4 ms	6.2 ms	12 ms
	8 bytes	1 bytes	2 bytes	8 bytes	2 bytes
	—	—	2 bytes	2 bytes	2 bytes
	Page 97	Page 99	Page 97	Page 99	Page 100

	BNI0048 BNI IOL-302-S01-Z013-C01	BNI00CP BNI IOL-302-S02-Z026	BNI0050 BNI IOL-302-000-Z026
Interface	IO-Link 1.0	IO-Link 1.1	IO-Link 1.0
Operating voltage Ub	18...30.2 VDC	18...30.2 VDC	18...30.2 VDC
Connection (COM 1)	M12x1-Male, 4-pin, A-coded	M12x1-Male, 4-pin, A-coded	M12x1-Male, 4-pin, A-coded
Connection (supply voltage IN)	7/8“-Male, 5-pin	7/8“-Male, 4-pin	7/8“-Male, 4-pin
Connection slots	8x M12x1-Female, 5-pin, A-coded	8x M12x1-Female, 5-pin, A-coded	8x M12x1-Female, 5-pin, A-coded
Digital inputs	16x PNP, Type 2	16x PNP, Type 3	16x PNP, Type 2
Digital outputs	16x PNP	16x PNP	16x PNP
Analog inputs	—	—	—
Configurable inputs/outputs	yes	yes	yes
Extension port	—	yes	—
Single-channel monitoring	yes	yes	—
Additional function	Identification 2 bytes	—	—
Current sum US, sensor	9.0 A	9.0 A	9.0 A
Current sum UA, actuator	9.0 A	9.0 A	9.0 A
Switching current	—	16x 2 A	16x 2 A
Housing material	Zinc, Die casting	Zinc, Die casting	Zinc, Die casting
Dimension	68 x 32.4 x 181.5 mm	68 x 32.4 x 181.5 mm	68 x 32.4 x 181.5 mm
Ambient temperature	-5...70 °C	-5...55 °C	-5...70 °C
IP rating	IP67, when threaded in	IP67, when threaded in	IP67, when threaded in
Transfer rate	COM2 (38.4 kBaud)	COM2 (38.4 kBaud)	COM2 (38.4 kBaud)
Process data cycle min.	30 ms	5.6 ms	12 ms
Process data IN	10 bytes	6 bytes	2 bytes
Process data OUT	2 bytes	2 bytes	2 bytes
Productview	Page 101	Page 101	Page 101

	BNI0090 BNI IOL-104-S02-R012	BNI0091 BNI IOL-302-S02-R026	BNI005L BNI IOL-302-000-K006	BNI005U BNI IOL-302-000-K006-C01	BNI007Z BNI IOL-302-002-K006
	IO-Link 1.1	IO-Link 1.1	IO-Link 1.1	IO-Link 1.1	IO-Link 1.1
	18...30.2 VDC	18...30.2 VDC	18...30.2 VDC	18...30.2 VDC	18...30.2 VDC
	M12x1-Male, 4-pin, A-coded	M12x1-Male, 4-pin, A-coded	M12x1-Male, 4-pin, A-coded	M12x1-Male, 4-pin, A-coded	M12x1-Male, 4-pin, A-coded
	—	7/8“-Male, 4-pin	—	—	—
	8x M12x1-Female, 5-pin, A-coded	8x M12x1-Female, 5-pin, A-coded	8x M12x1-Female, 5-pin, A-coded	8x M12x1-Female, 5-pin, A-coded	8x M12x1-Female, 5-pin, A-coded
	16x PNP, Type 3	16x PNP, Type 3	16x PNP, Type 3	16x PNP, Type 3	16x PNP, Type 3
	—	16x PNP	16x PNP	16x PNP	16x PNP
	—	—	—	—	—
	no	yes	yes	yes	yes
	yes	yes	—	—	yes
	yes	yes	—	—	—
	—	—	—	Identification 2 bytes	—
	3.5 A	9 A	4 A	4 A	4 A
	—	9 A	4 A	4 A	4 A
	—	16x 2 A	16x 350 mA	16x 350 mA	16x 350 mA
	PPS	PPS	PA, Transparent	PA, Transparent	PA, Transparent
	68 x 36.8 x 183.5 mm	68 x 37.6 x 183.5 mm	50 x 30.8 x 115 mm	50 x 30.8 x 115 mm	50 x 30.8 x 115 mm
	-5...70 °C	-5...55 °C	-5...55 °C	-5...55 °C	-20...55 °C
	IP67, when threaded in	IP67, when threaded in	IP67, when threaded in	IP67, when threaded in	IP67, when threaded in
	COM2 (38.4 kBaud)	COM2 (38.4 kBaud)	COM2 (38.4 kBaud)	COM2 (38.4 kBaud)	COM2 (38.4 kBaud)
	4.5 ms	6.0 ms	3.5 ms	4.0 ms	3.5 ms
	4 bytes	6 bytes	2 bytes	4 bytes	2 bytes
	—	2 bytes	2 bytes	2 bytes	2 bytes
	Page 101	Page 102	Page 102	Page 103	Page 103

	BNI005T BNI IOL-302-S01-K006	BNI005W BNI IOL-302-S01-K006-C01	BNI00AF BNI IOL-311-002-K006	
Interface	IO-Link 1.1	IO-Link 1.1	IO-Link 1.1	
Operating voltage Ub	18...30.2 VDC	18...30.2 VDC	18...30.2 VDC	
Connection (COM 1)	M12x1-Male, 4-pin, A-coded	M12x1-Male, 4-pin, A-coded	M12x1-Male, 4-pin, A-coded	
Connection (supply voltage IN)	—	—	—	
Connection slots	8x M12x1-Female, 5-pin, A-coded	8x M12x1-Female, 5-pin, A-coded	8x M12x1-Female, 5-pin, A-coded	
Digital inputs	16x PNP, Type 3	16x PNP, Type 3	16x NPN, Type 3	
Digital outputs	16x PNP	16x PNP	16x NPN	
Analog inputs	—	—	—	
Configurable inputs/outputs	yes	yes	yes	
Extension port	—	—	yes	
Single-channel monitoring	yes	yes	—	
Additional function	—	Identification 2 bytes	—	
Current sum US, sensor	4 A	4 A	4 A	
Current sum UA, actuator	4 A	4 A	4 A	
Switching current	16x 350 mA	16x 350 mA	16x 200 mA	
Housing material	PA, Transparent	PA, Transparent	PA, Transparent	
Dimension	50 x 30.8 x 115 mm	50 x 30.8 x 115 mm	50 x 30.8 x 115 mm	
Ambient temperature	-5...55 °C	-5...55 °C	-5...55 °C	
IP rating	IP67, when threaded in	IP67, when threaded in	IP67, when threaded in	
Transfer rate	COM2 (38.4 kBaud)	COM2 (38.4 kBaud)	COM2 (38.4 kBaud)	
Process data cycle min.	5.0 ms	5.5 ms	3.5 ms	
Process data IN	8 bytes	10 bytes	2 bytes	
Process data OUT	2 bytes	2 bytes	2 bytes	
Productview	Page 104	Page 104	Page 105	

	BNI00AW BNI IOL-311-S02-K006-C01	BNI0074 BNI IOL-106-000-K006	BNI0075 BNI IOL-106-S01-K006	BNI0076 BNI IOL-106-S01-K006-C01	BNI0006 BNI IOL-104-000-K006
	IO-Link 1.1	IO-Link 1.1	IO-Link 1.1	IO-Link 1.1	IO-Link 1.0
	18...30.2 VDC	18...30.2 VDC	18...30.2 VDC	18...30.2 VDC	18...30.2 VDC
	M12x1-Male, 4-pin, A-coded	M12x1-Male, 4-pin, A-coded	M12x1-Male, 4-pin, A-coded	M12x1-Male, 4-pin, A-coded	M12x1-Male, 4-pin, A-coded
	—	—	—	—	—
	8x M12x1-Female, 5-pin, A-coded	8x M12x1-Female, 5-pin, A-coded	8x M12x1-Female, 5-pin, A-coded	8x M12x1-Female, 5-pin, A-coded	8x M12x1-Female, 5-pin, A-coded
	16x NPN, Type 3	16x NPN, Type 2	16x NPN, Type 2	16x NPN, Type 2	16x PNP, Type 2
	16x NPN	—	—	—	—
	—	—	—	—	—
	yes	no	no	no	no
	yes	—	—	—	—
	yes	—	yes	yes	—
	Identification 2 bytes	—	—	Identification 2 bytes	—
	4 A	4 A	4 A	4 A	4 A
	4 A	—	—	—	—
	16x 200 mA	—	—	—	—
	PA, Transparent	PA, Transparent	PA, Transparent	PA, Transparent	PA, Transparent
	50 x 30.8 x 115 mm	50 x 30.8 x 115 mm	50 x 30.8 x 115 mm	50 x 30.8 x 115 mm	50 x 30.8 x 115 mm
	-5...55 °C	-5...55 °C	-5...55 °C	-5...55 °C	-5...55 °C
	IP67, when threaded in	IP67, when threaded in	IP67, when threaded in	IP67, when threaded in	IP67, when threaded in
	COM2 (38.4 kBaud)	COM2 (38.4 kBaud)	COM2 (38.4 kBaud)	COM2 (38.4 kBaud)	COM2 (38.4 kBaud)
	6.0 ms	3.0 ms	3.5 ms	4.0 ms	3.0 ms
	10 bytes	2 bytes	4 bytes	6 bytes	2 bytes
	2 bytes	—	—	—	—
	Page 105	Page 106	Page 108	Page 107	Page 107

	BNI0005 BNI IOL-102-000-K006	BNI0007 BNI IOL-709-000-K006	BNI0008 BNI IOL-710-000-K006
Interface	IO-Link 1.0	IO-Link 1.0	IO-Link 1.0
Operating voltage Ub	18...30.2 VDC	18...30.2 VDC	18...30.2 VDC
Connection (COM 1)	M12x1-Male, 4-pin, A-coded	M12x1-Male, 4-pin, A-coded	M12x1-Male, 4-pin, A-coded
Connection (supply voltage IN)	—	—	—
Connection slots	8x M12x1-Female, 5-pin, A-coded	8x M12x1-Female, 5-pin, A-coded	8x M12x1-Female, 5-pin, A-coded
Digital inputs	8x PNP, Type 2	8x PNP, Type 2	8x PNP, Type 2
Digital outputs	—	—	—
Analog inputs	—	4x Analog, current (4…20 mA)	4x Analog, voltage (0…10 V)
Configurable inputs/outputs	no	no	no
Extension port	—	—	—
Single-channel monitoring	—	—	—
Additional function	—	—	—
Current sum US, sensor	4 A	4 A	4 A
Current sum UA, actuator	—	—	—
Switching current	—	—	—
Housing material	PA, Transparent	PA, Transparent	PA, Transparent
Dimension	50 x 30.8 x 115 mm	50 x 30.8 x 115 mm	50 x 30.8 x 115 mm
Ambient temperature	-5...55 °C	-5...55 °C	-5...55 °C
IP rating	IP67, when threaded in	IP67, when threaded in	IP67, when threaded in
Transfer rate	COM2 (38.4 kBaud)	COM2 (38.4 kBaud)	COM2 (38.4 kBaud)
Process data cycle min.	3.0 ms	30 ms	30 ms
Process data IN	1 bytes	10 bytes	10 bytes
Process data OUT	—	—	—
Productview	Page 108	Page 108	Page 109

	BNI007P BNI IOL-309-000-K024-001	BNI004K BNI IOL-309-000-K024	BNI004L BNI IOL-310-000-K025	BNI007R BNI IOL-310-000-K025-001	
	IO-Link 1.0	IO-Link 1.0	IO-Link 1.0	IO-Link 1.0	
	18...30.2 VDC	18...30.2 VDC	18...30.2 VDC	18...30.2 VDC	
	Pluggable without terminals, 4-pin	Screw/plug-in terminals, 4-pin	Screw/plug-in terminals, 4-pin	Pluggable without terminals, 4-pin	
	Pluggable without terminals	Screw/plug-in terminals	Screw/plug-in terminals	Pluggable without terminals	
	Pluggable without terminals	Screw/plug-in terminals	Screw/plug-in terminals	Pluggable without terminals	
	8x PNP, Type 2	8x PNP, Type 2	16x PNP, Type 2	16x PNP, Type 2	
	8x PNP	8x PNP	16x PNP	16x PNP	
	—	—	—	—	
	yes	yes	yes	yes	
	—	—	—	—	
	—	—	—	—	
	—	—	—	—	
	1.0 A	1.0 A	1.0 A	1.0 A	
	1.6 A	1.0 A	1.6 A	1.6 A	
	8x 350 mA	—	16x 350 mA	16x 350 mA	
	PA 6.6, UL94V-0	PA 6.6, UL94V-0	PA 6.6, UL94V-0	PA 6.6, UL94V-0	
	48.6 x 33.6 x 84 mm	48.6 x 42.6 x 84 mm	79 x 33.6 x 84 mm	79 x 33.6 x 84 mm	
	-20...50 °C	-20...50 °C	-20...50 °C	-20...50 °C	
	IP20	IP20	IP20	IP20	
	COM2 (38.4 kBaud)	COM2 (38.4 kBaud)	COM2 (38.4 kBaud)	COM2 (38.4 kBaud)	
	3.0 ms	3.0 ms	12 ms	12 ms	
	1 bytes	1 bytes	2 bytes	2 bytes	
	1 bytes	1 bytes	2 bytes	2 bytes	
	Page 109	Page 110	Page 110	Page 111	

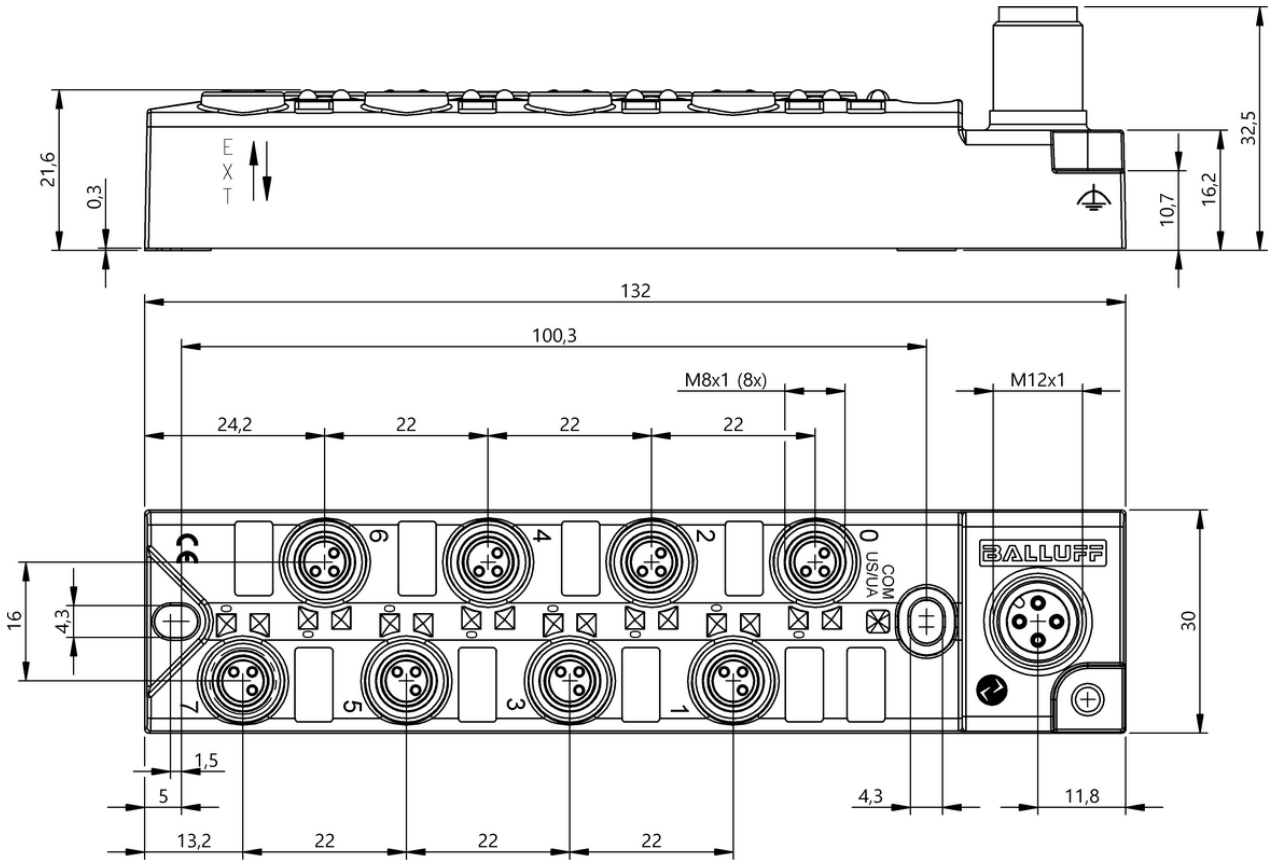

BNI0093, BNI0099

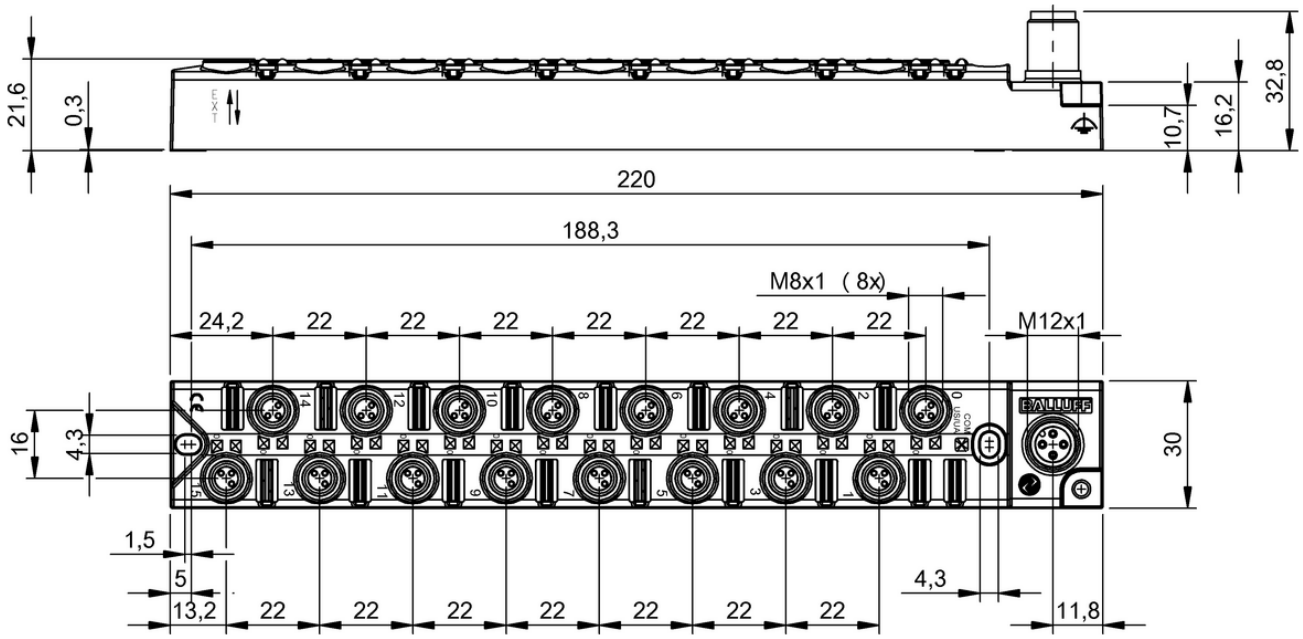

BNI00AU

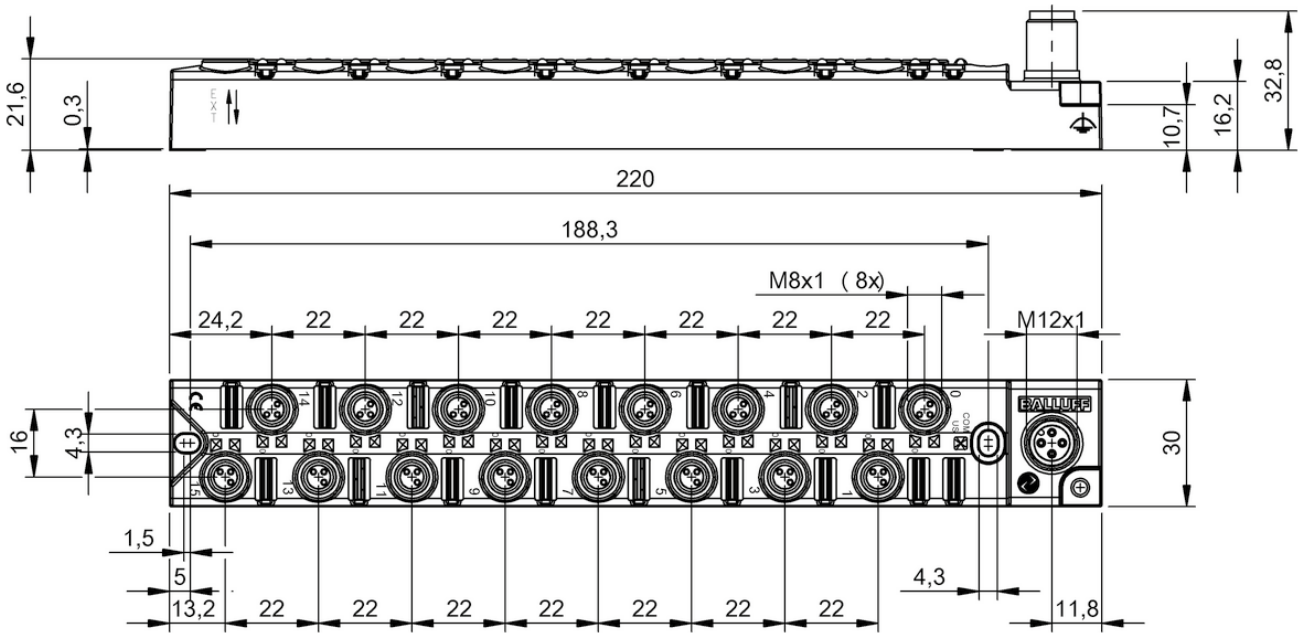

BNI00AY

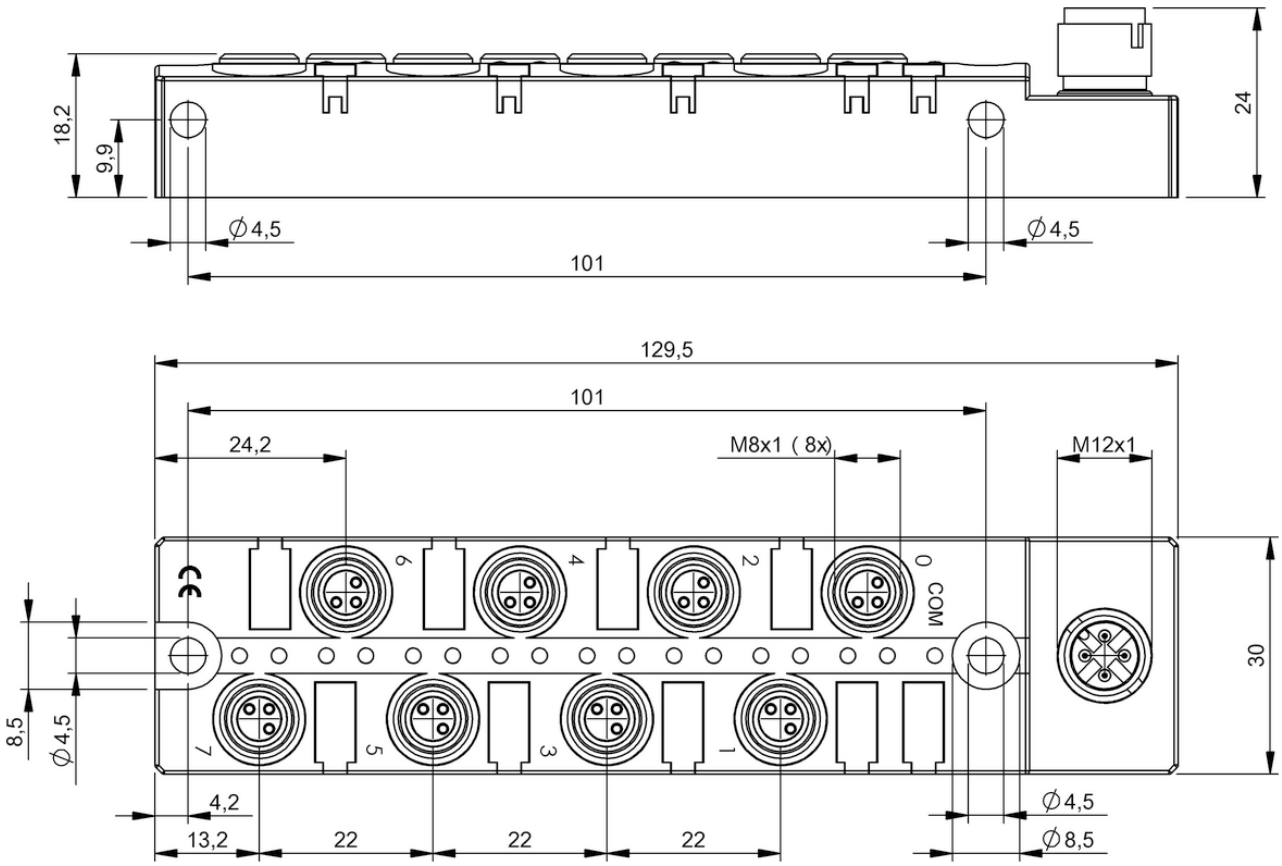

BNI000R, BNI001Y

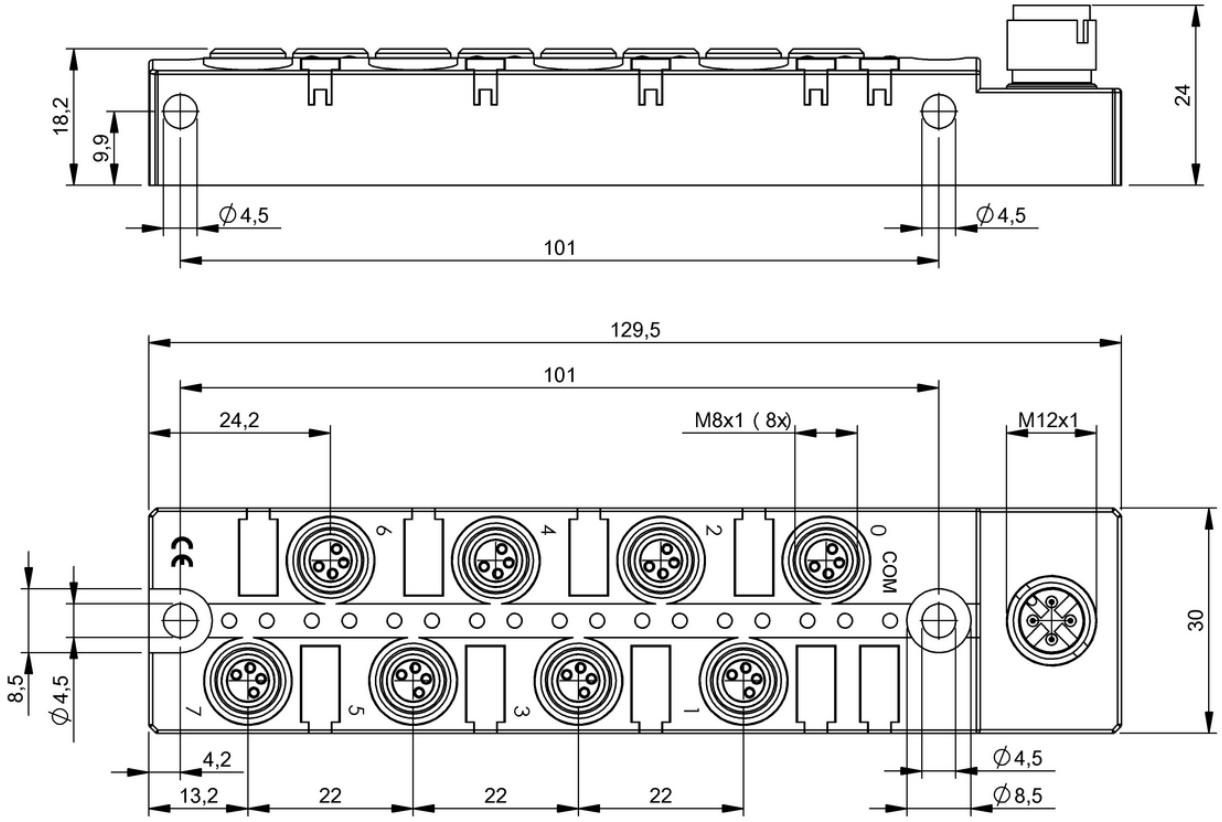

BNI0021, BNI0022

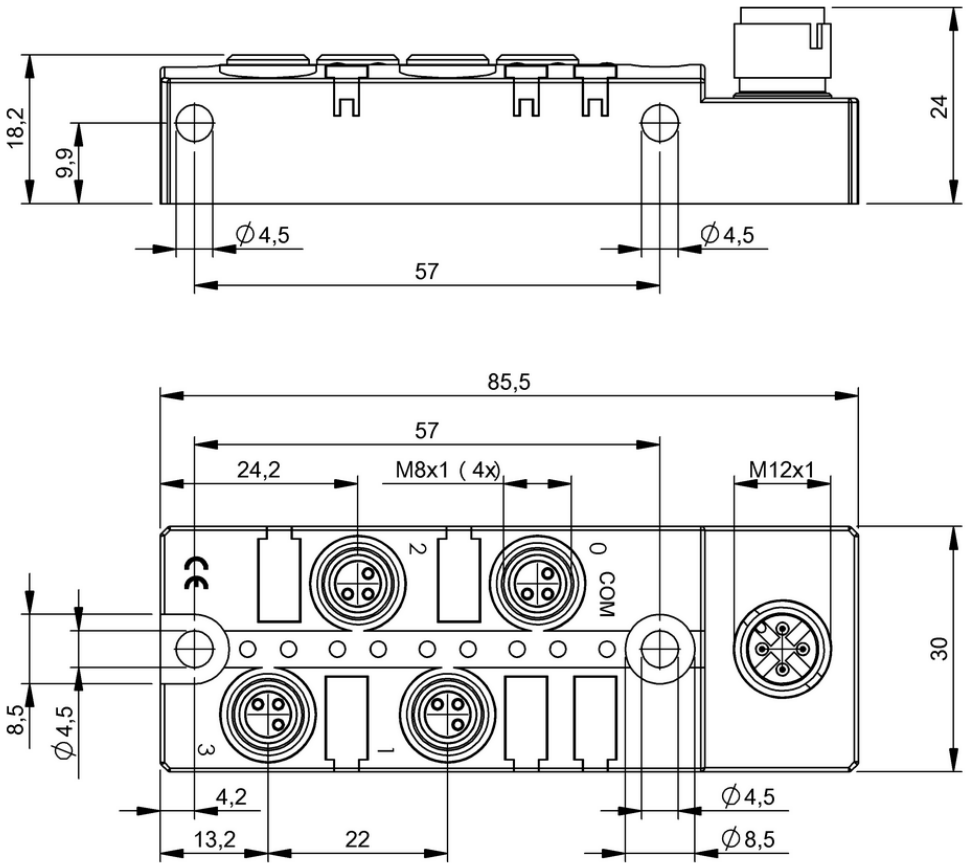

BNI000P, BNI001W

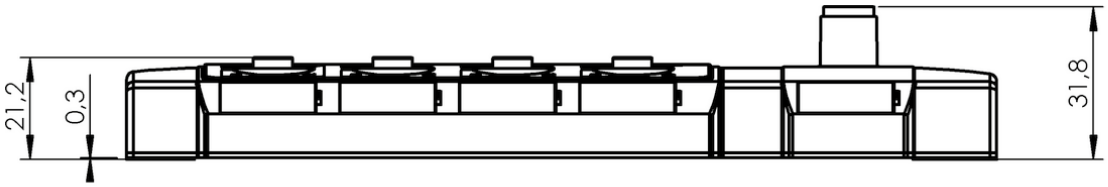

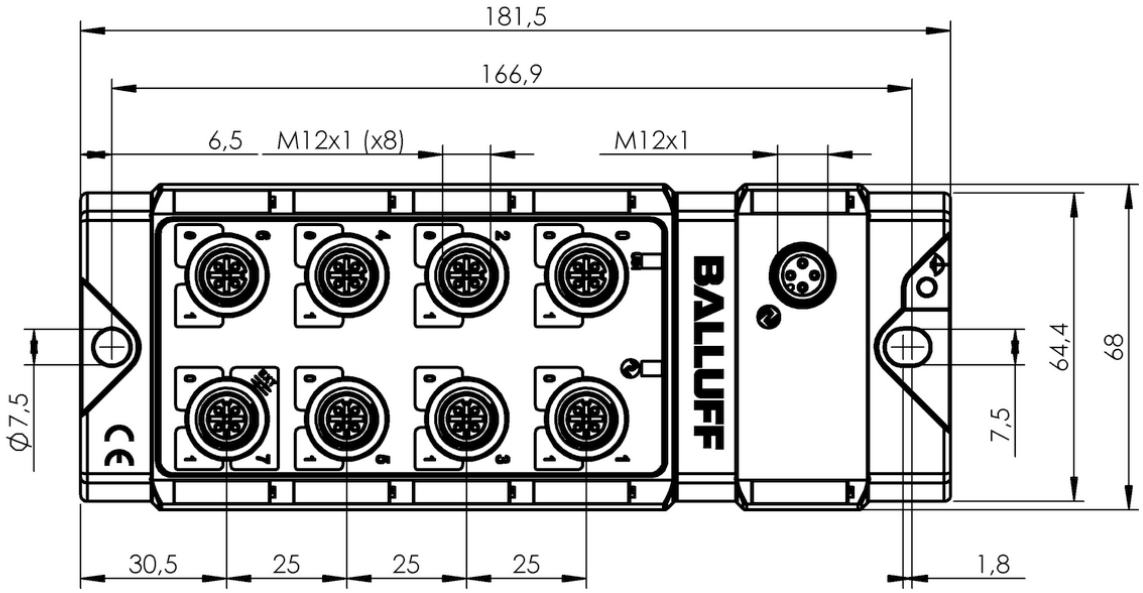

BNI00CN, BNI00CR, BNI00CM

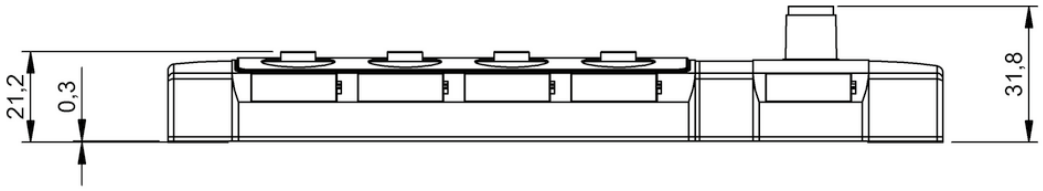

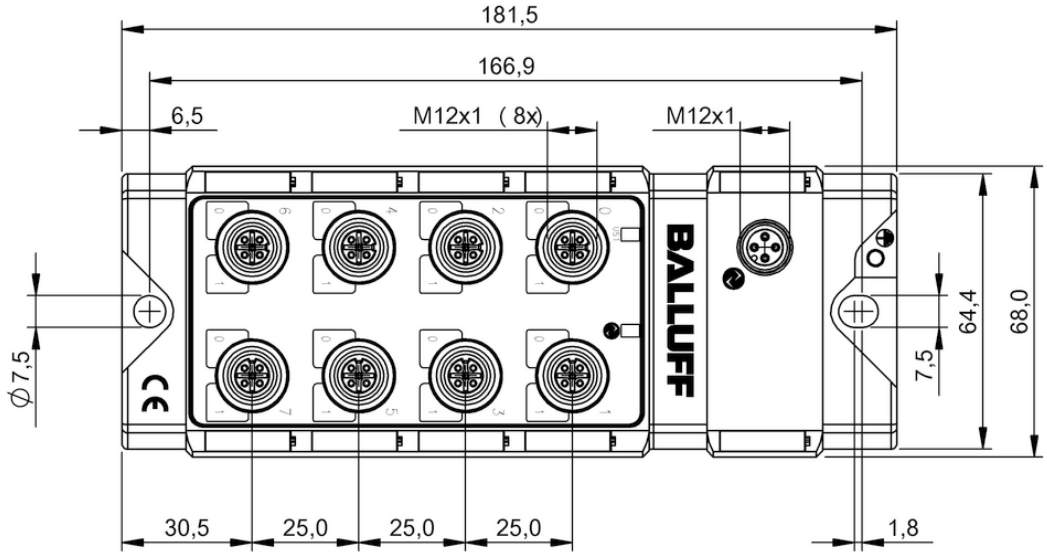

BNI0063, BNI0062, BNI0061, BNI0032, BNI003T, BNI005P

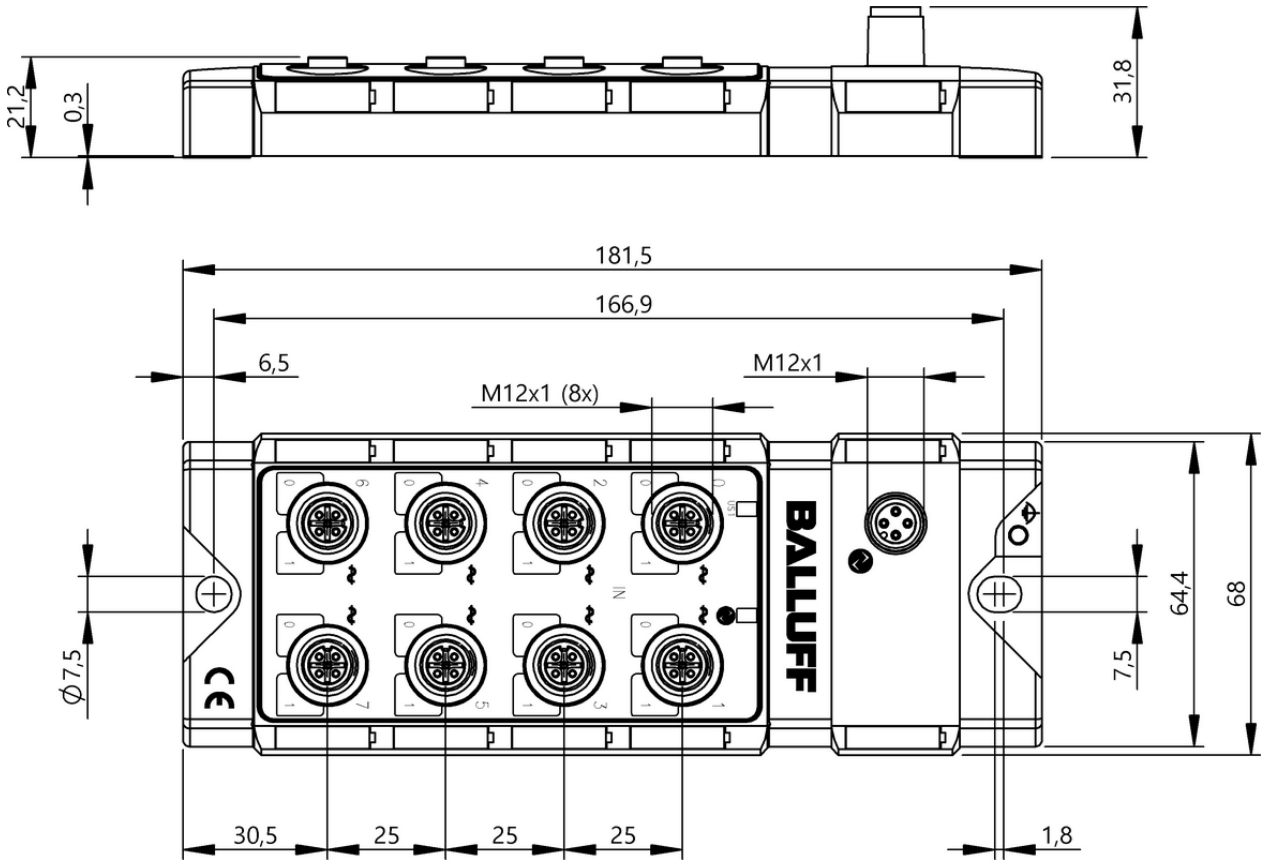

BNI00AJ

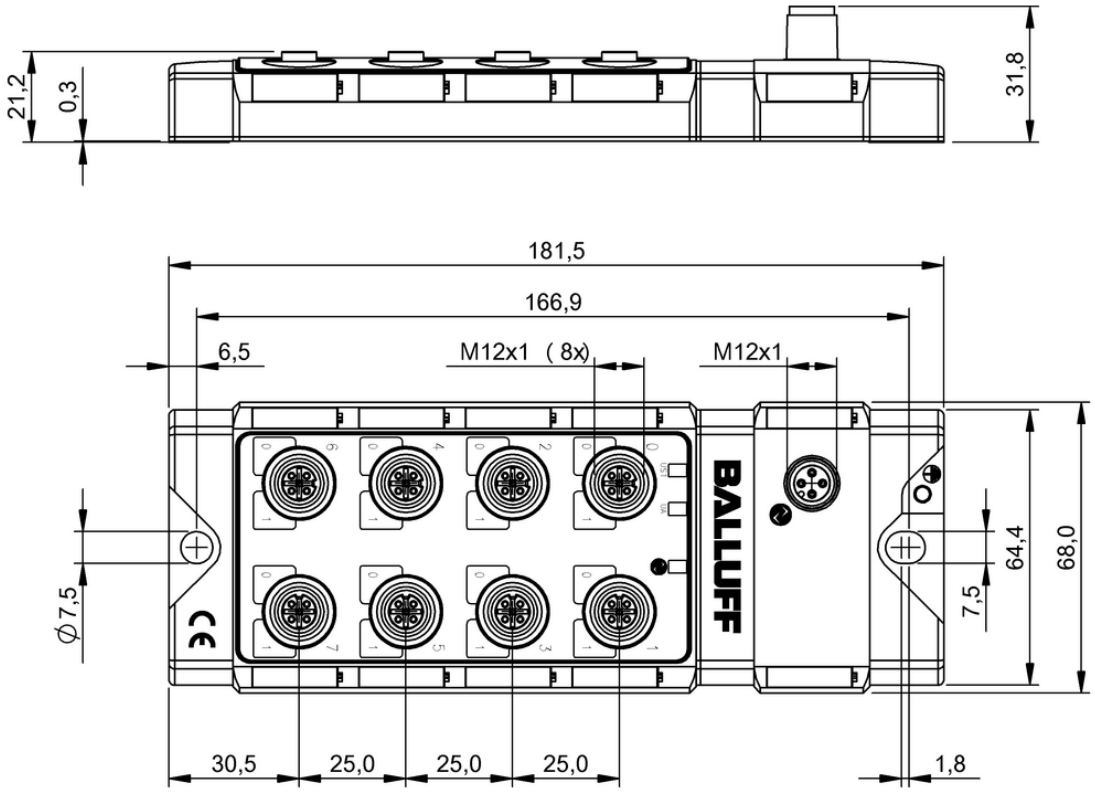

BNI003U

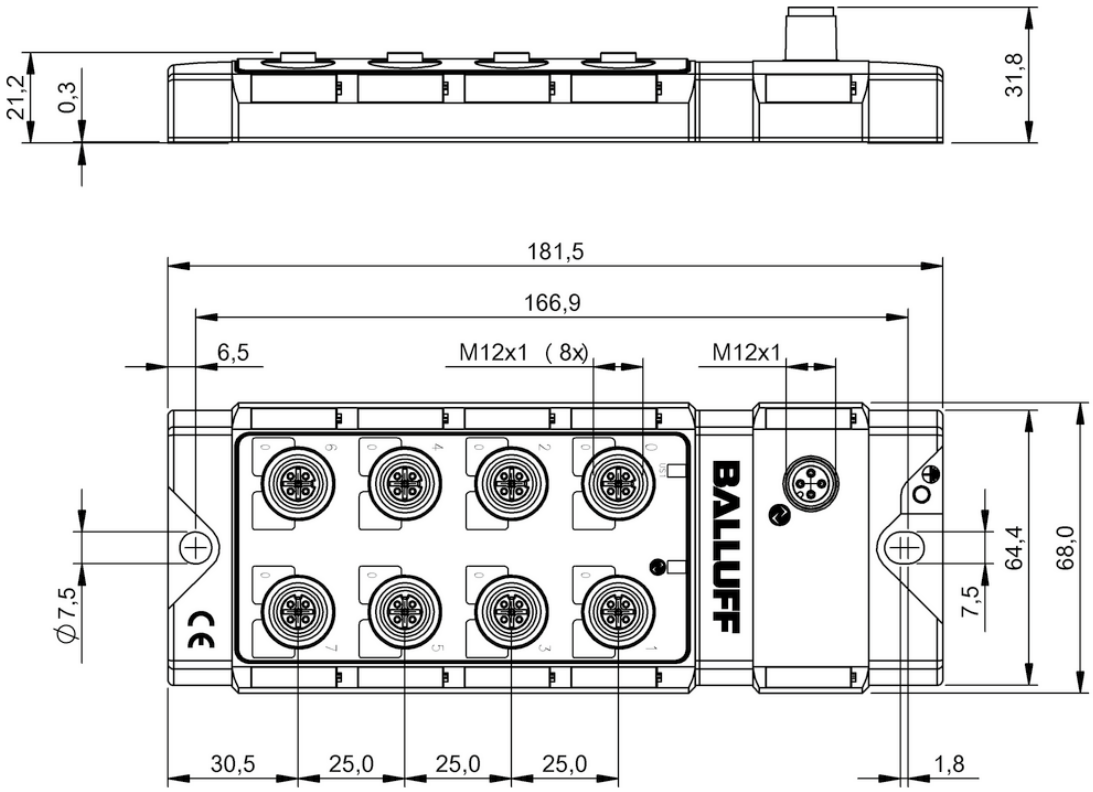

BNI0031

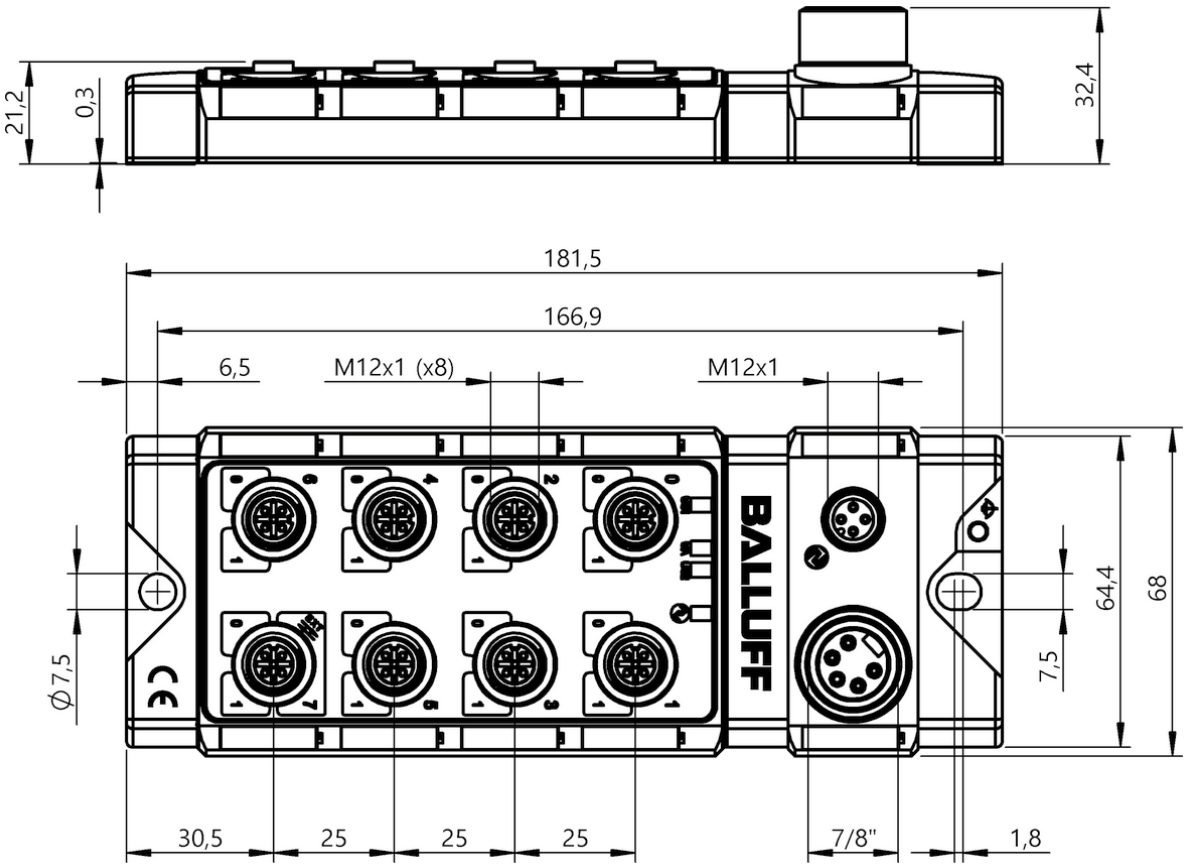

BNI0046

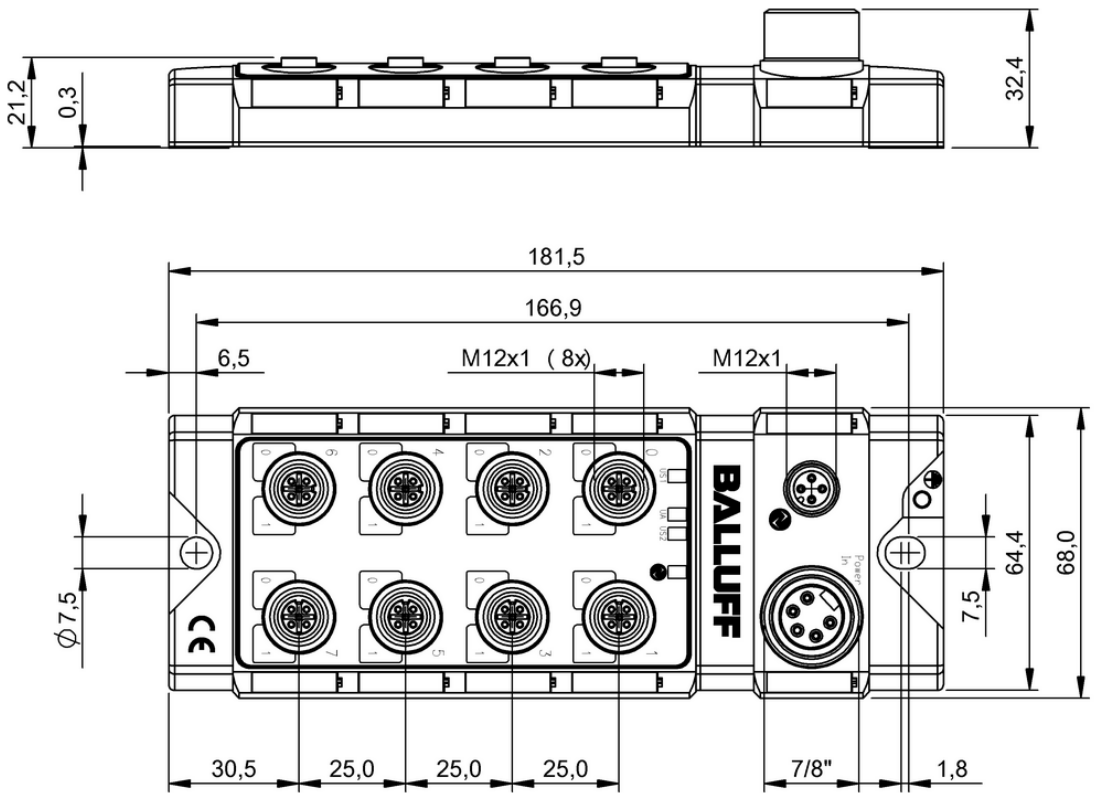

BNI0035, BNI0048

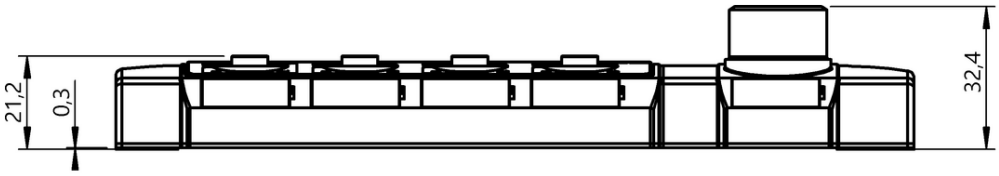

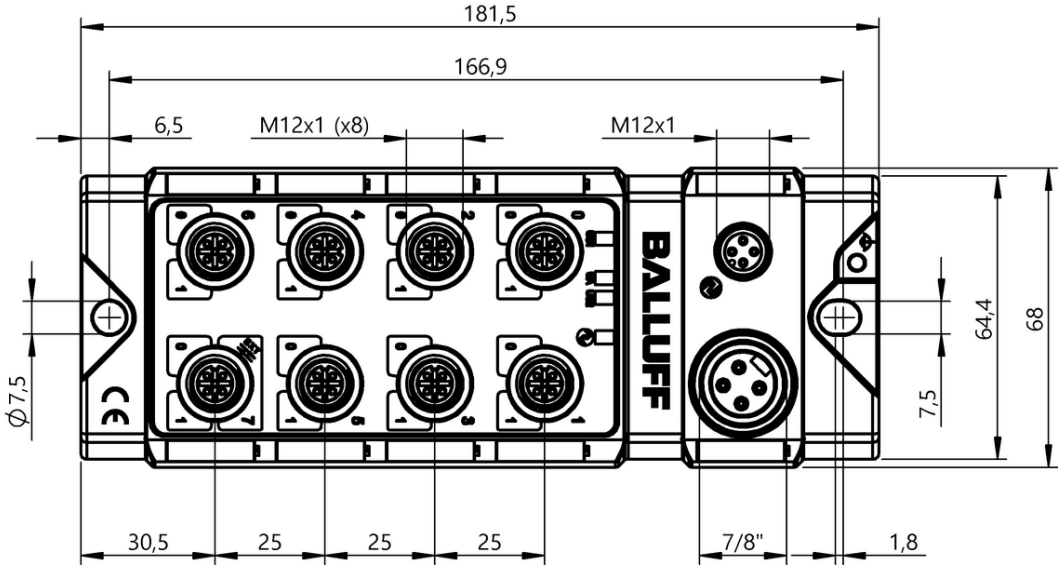

BNI00CP

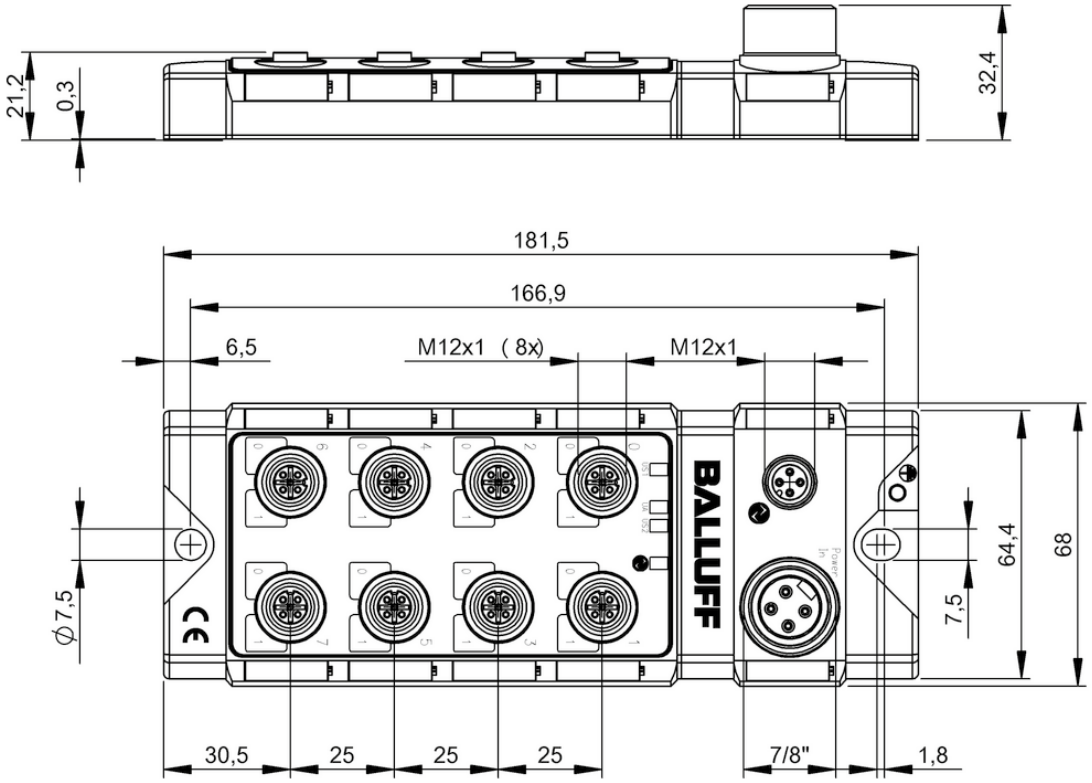

BNI0050

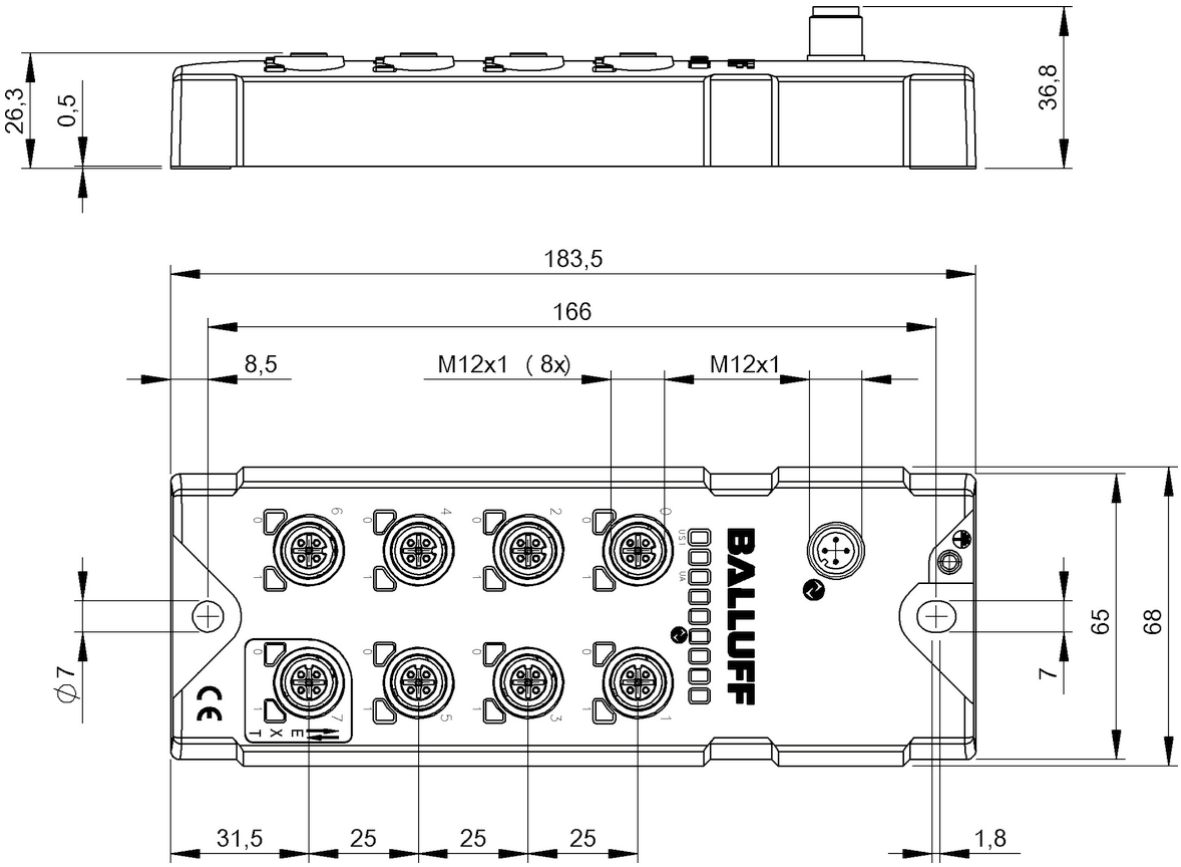

BNI0090

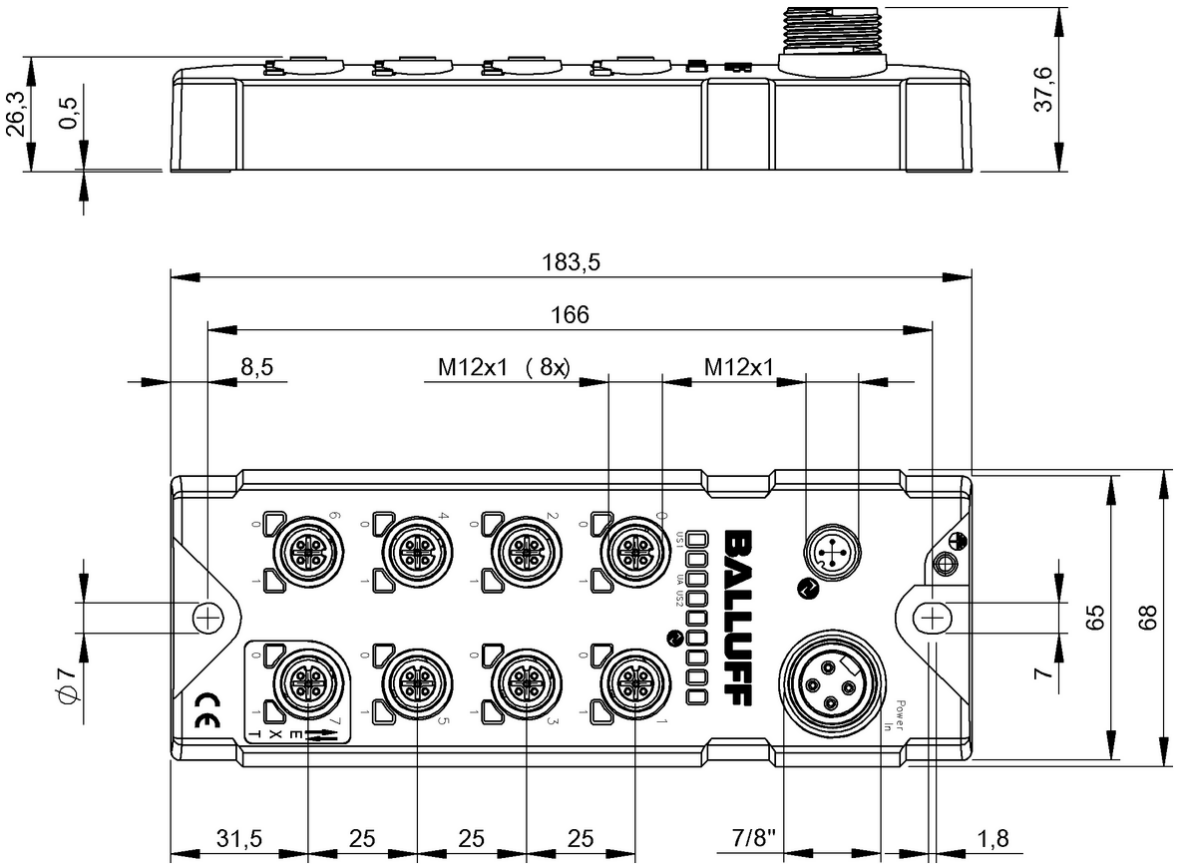

BNI0091

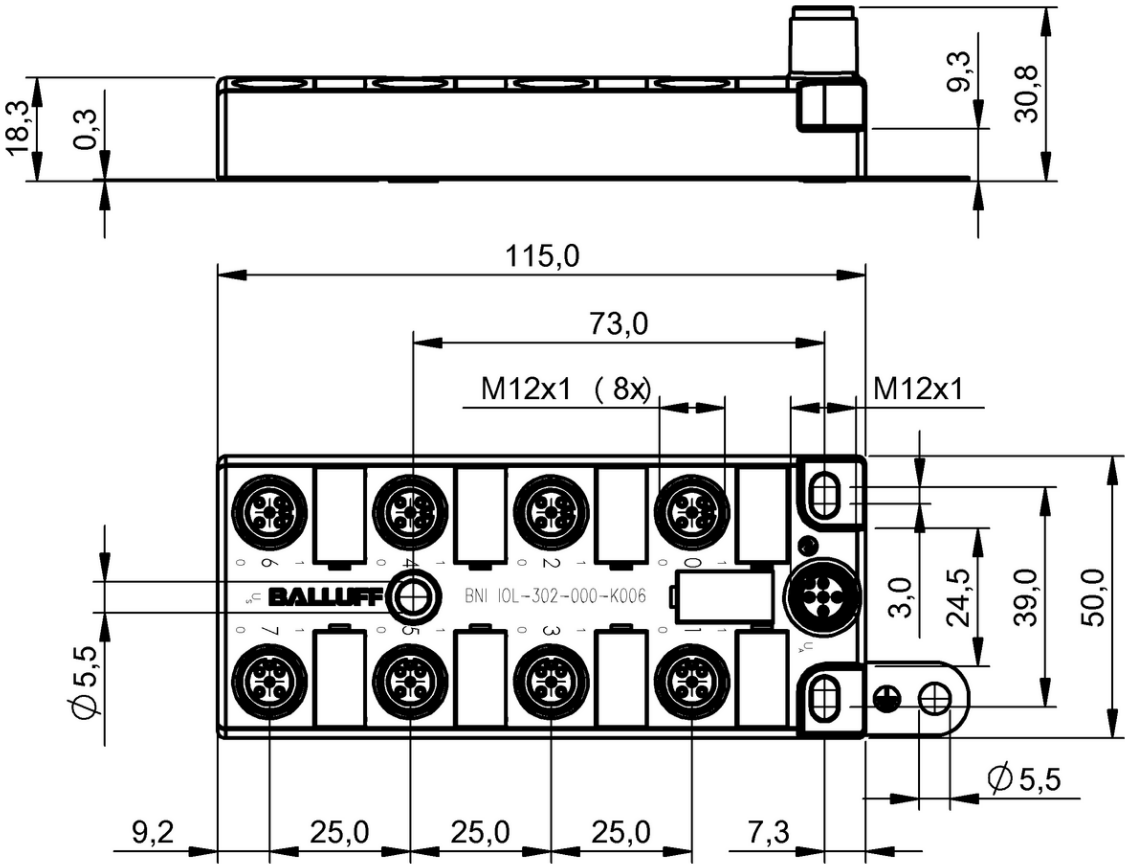

BNI005L

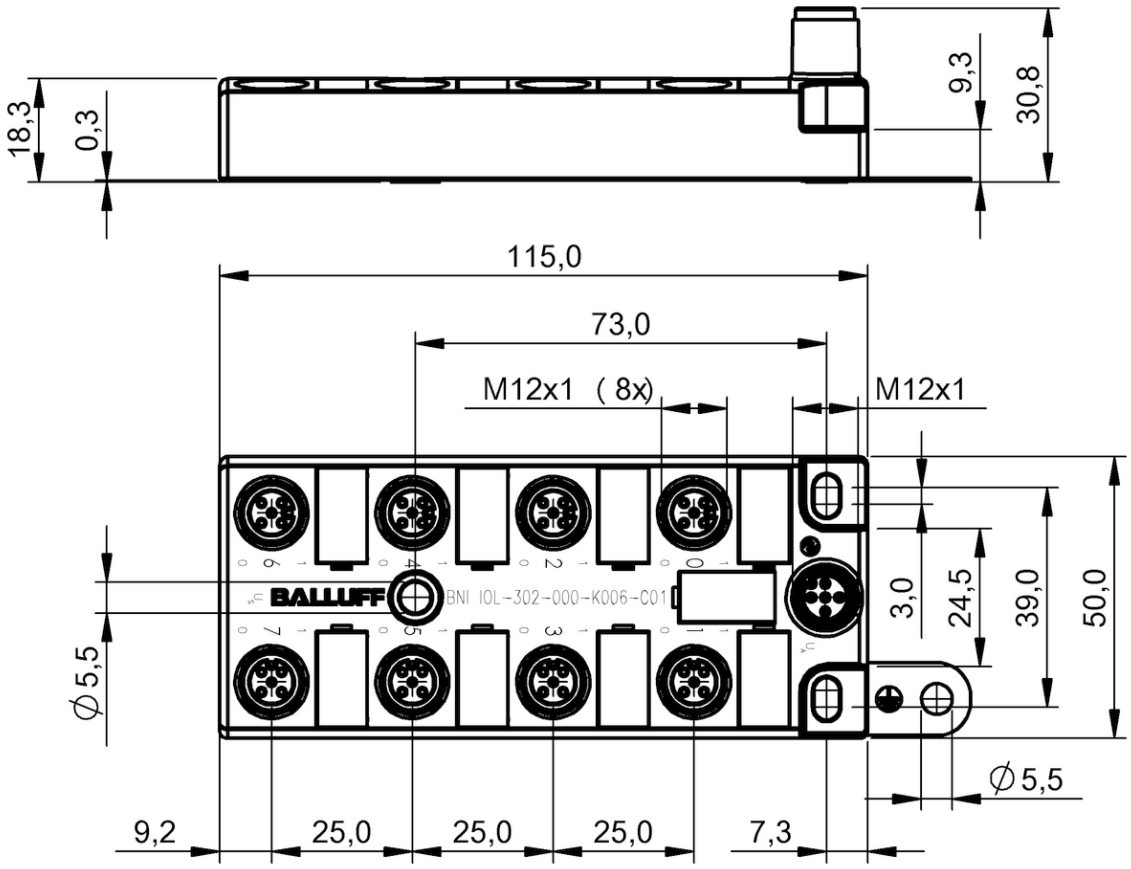

BNI005U

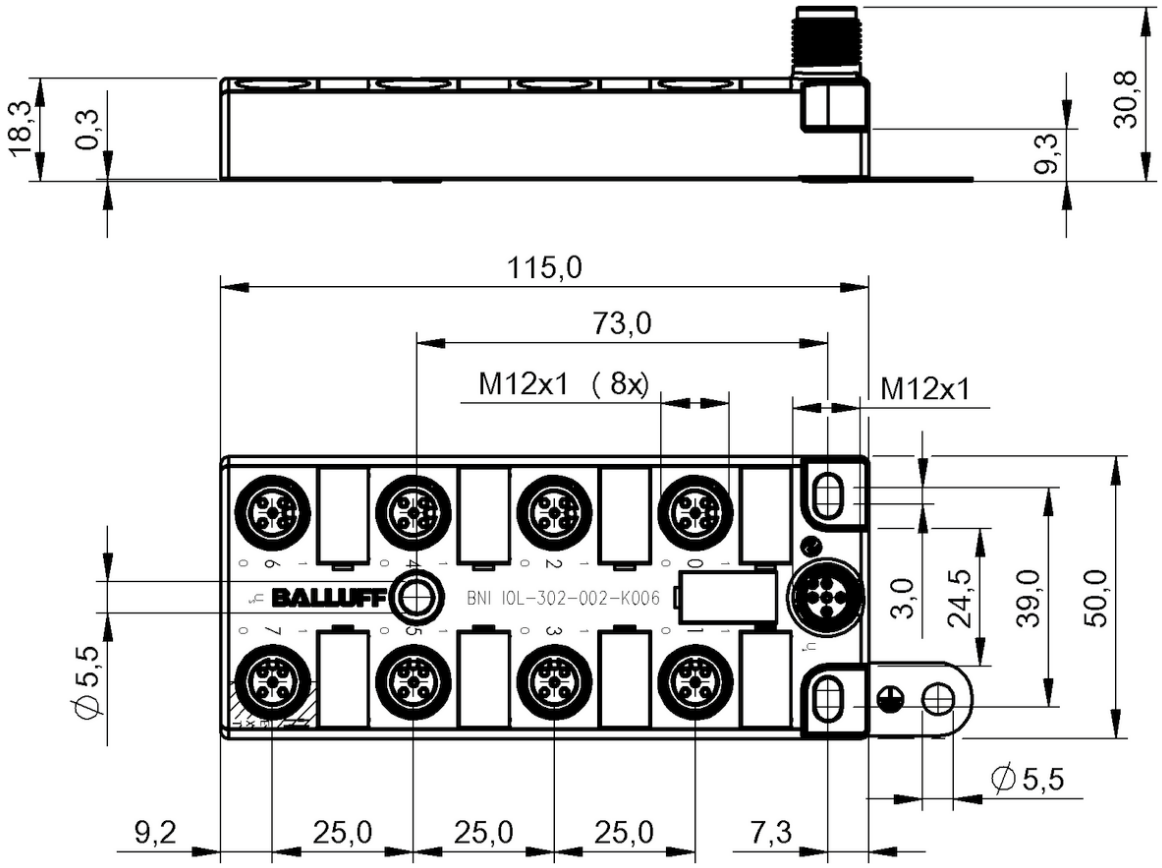

BNI007Z

Do you need more details? Our Product Finder at www.balluff.com provides you with product-specific information, including technical drawings, data sheets, user guides and more for each individual product. All items are available for download.

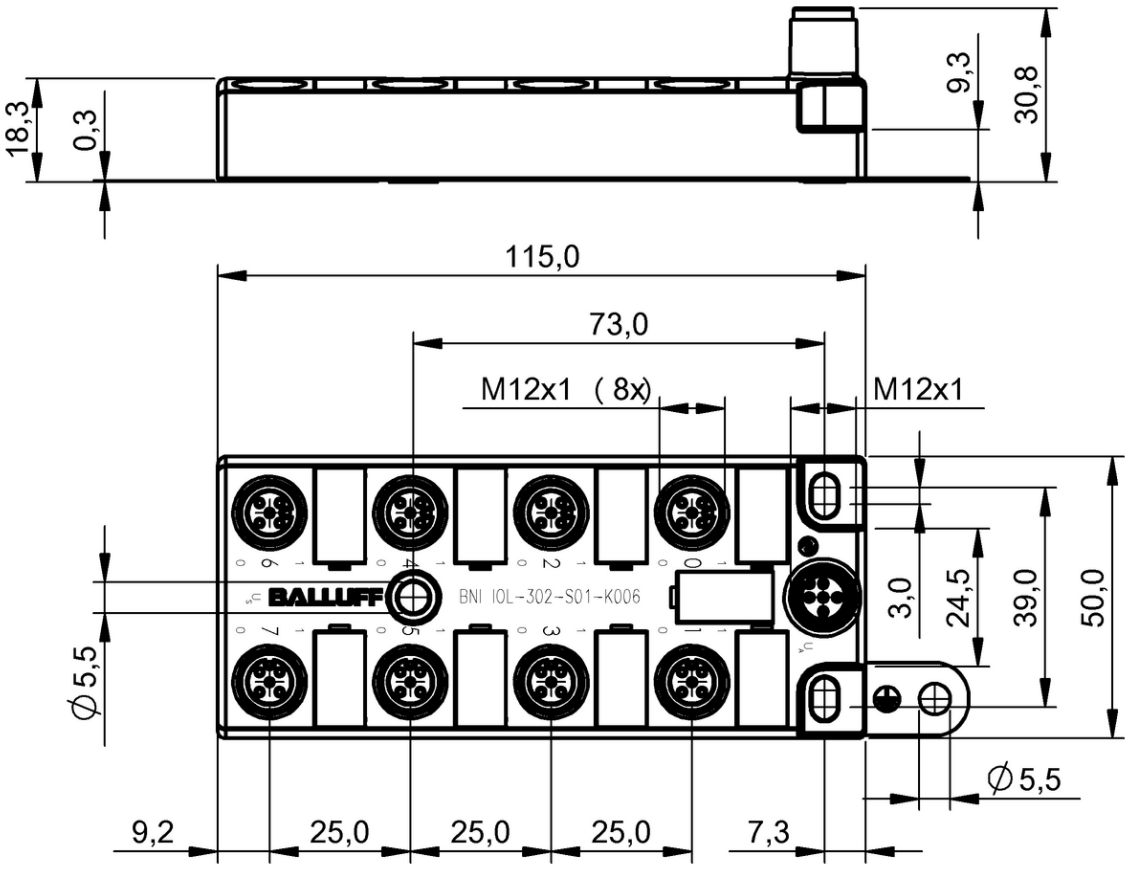

BNI005T

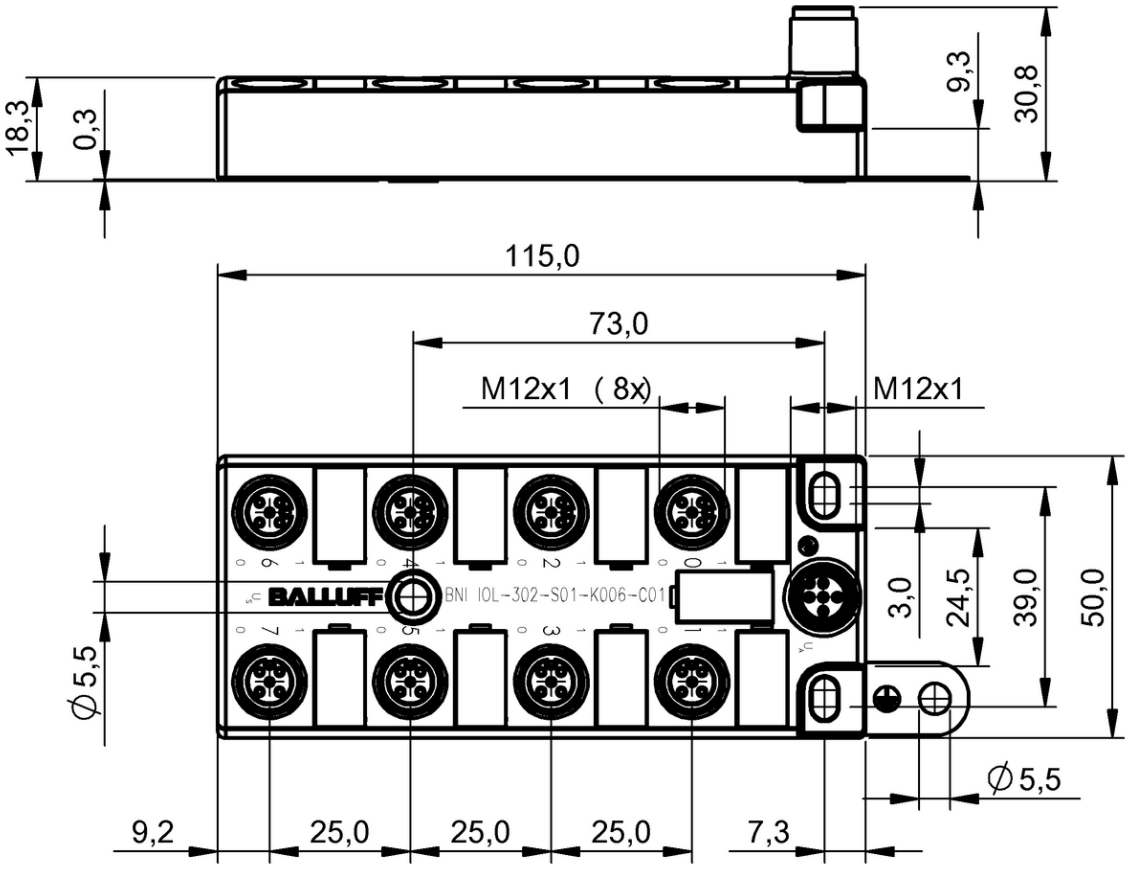

BNI005W

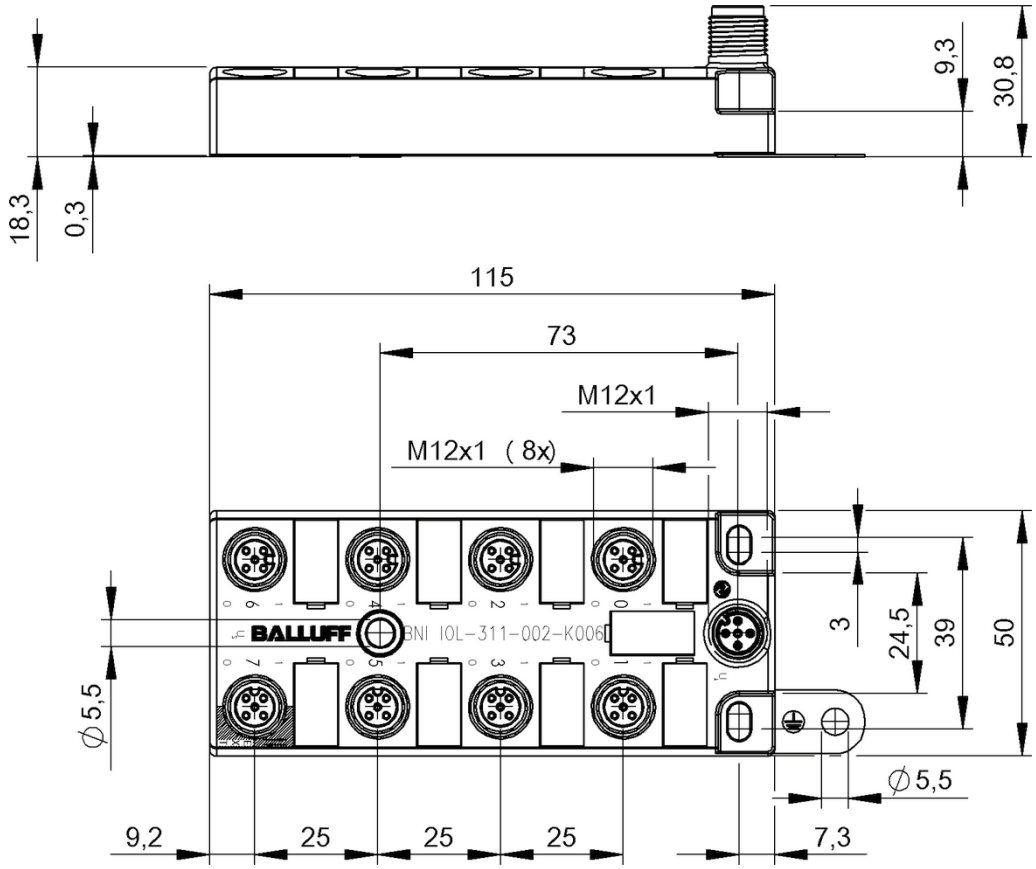

BNI00AF

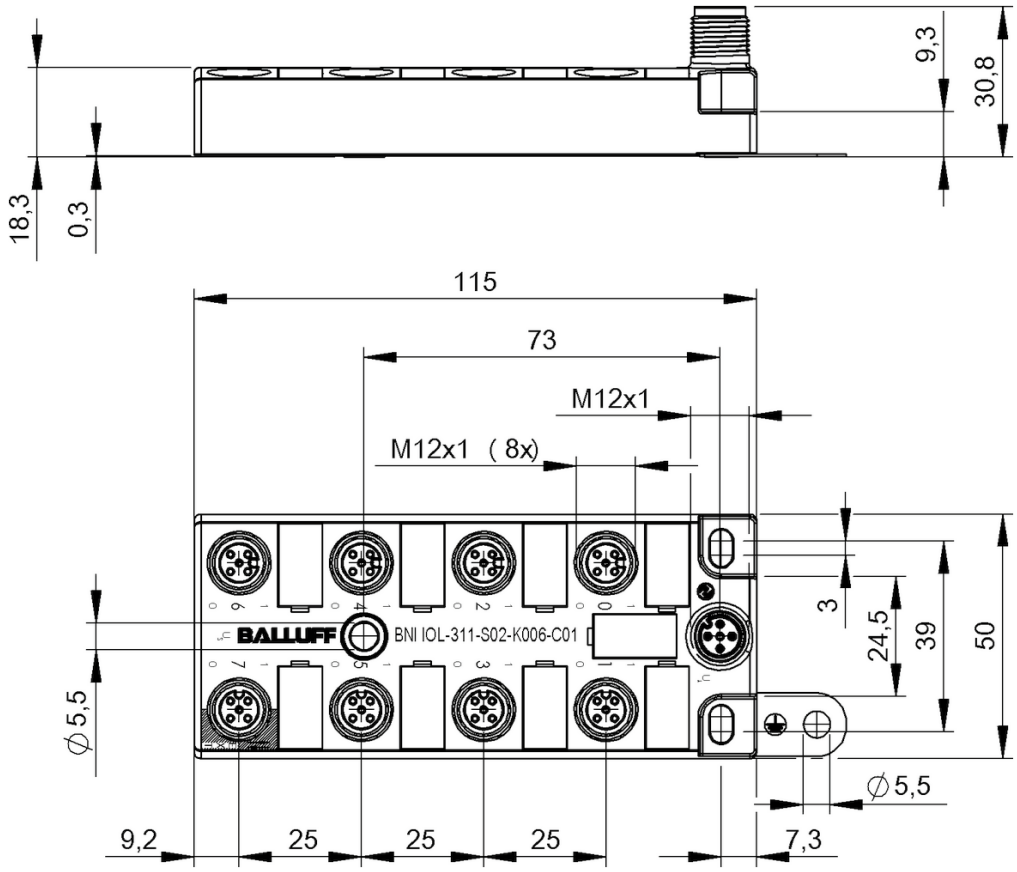

BNI00AW

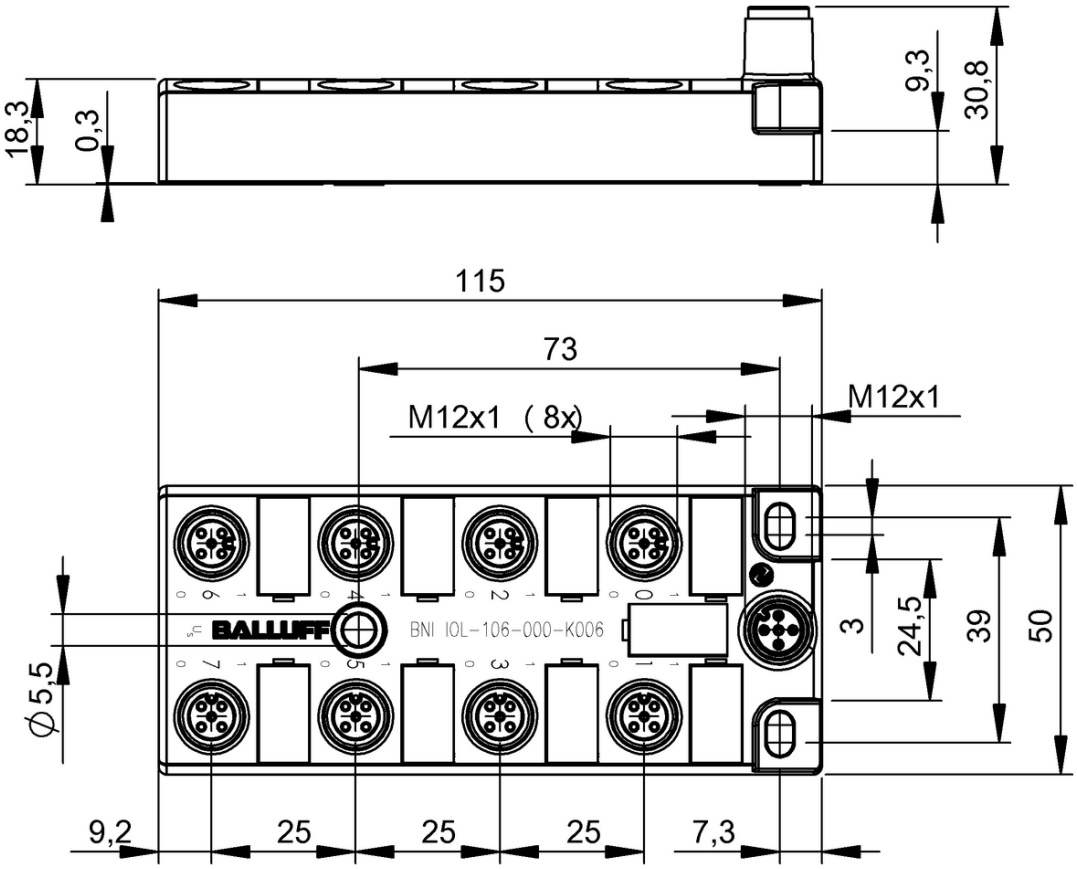

BNI0074

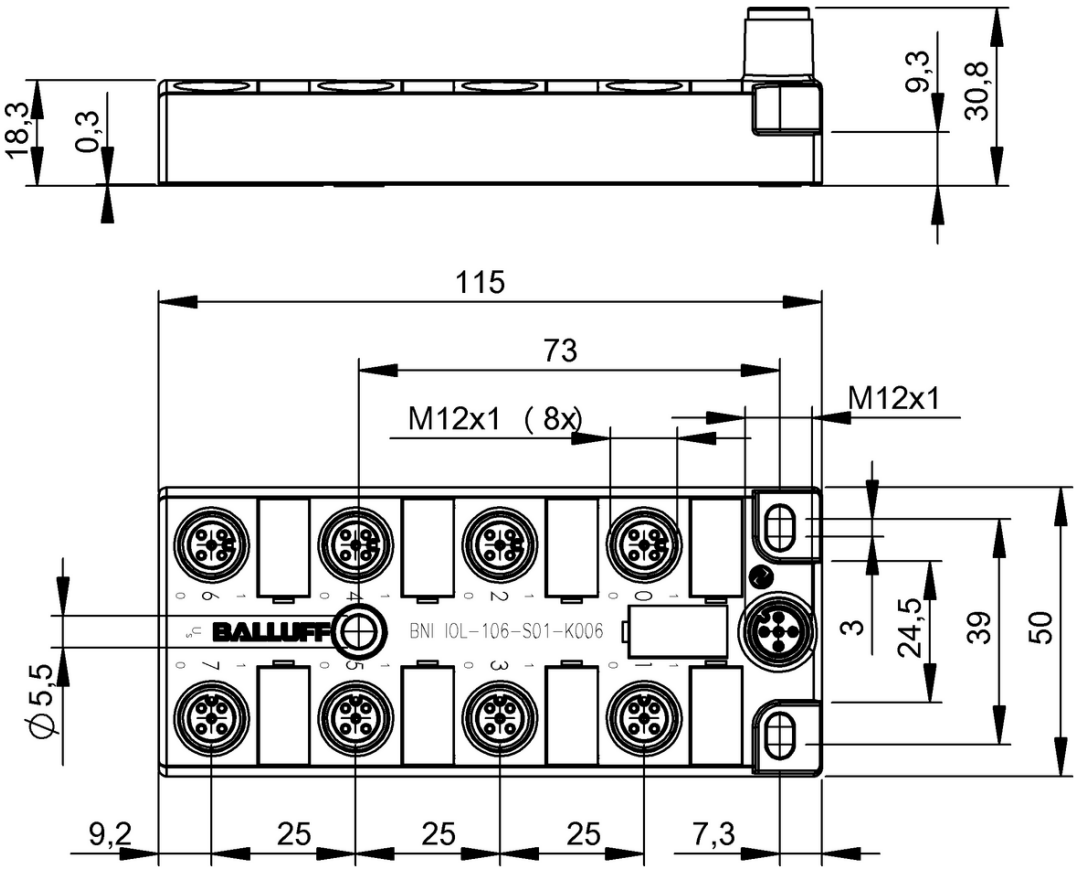

BNI0075

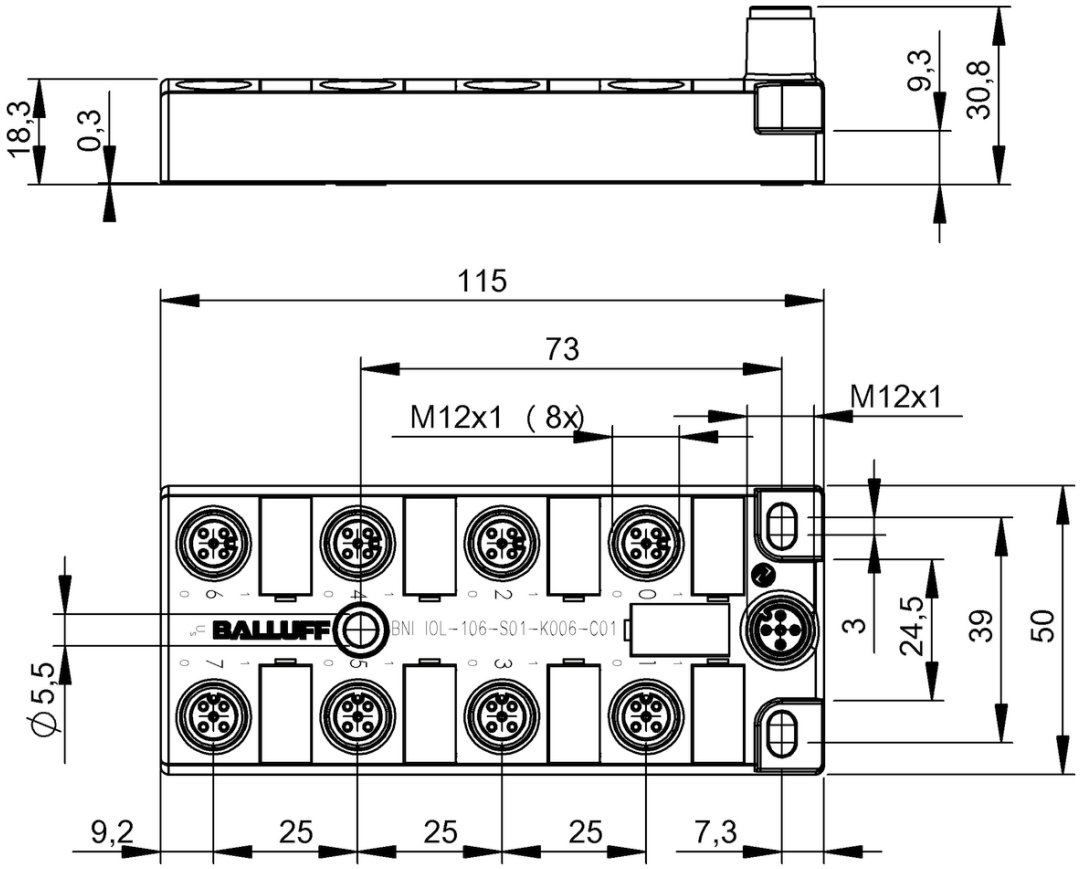

BNI0076

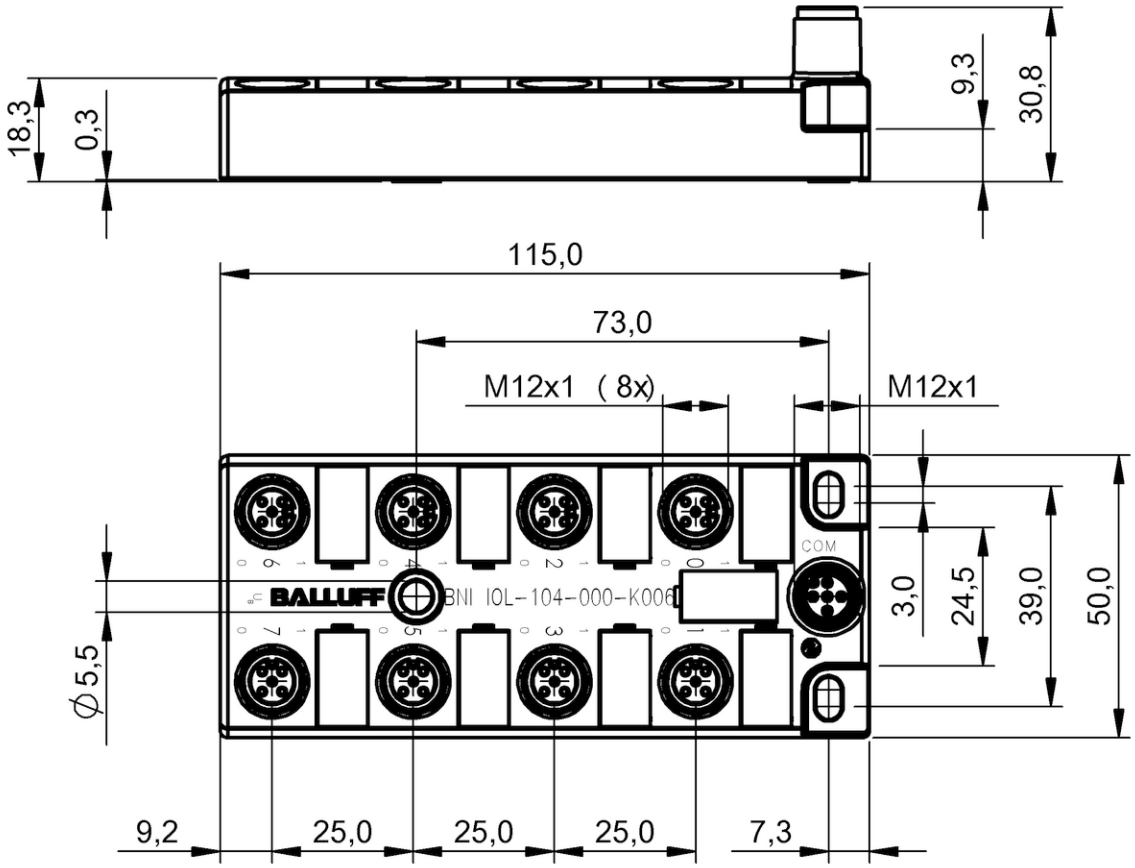

BNI0006

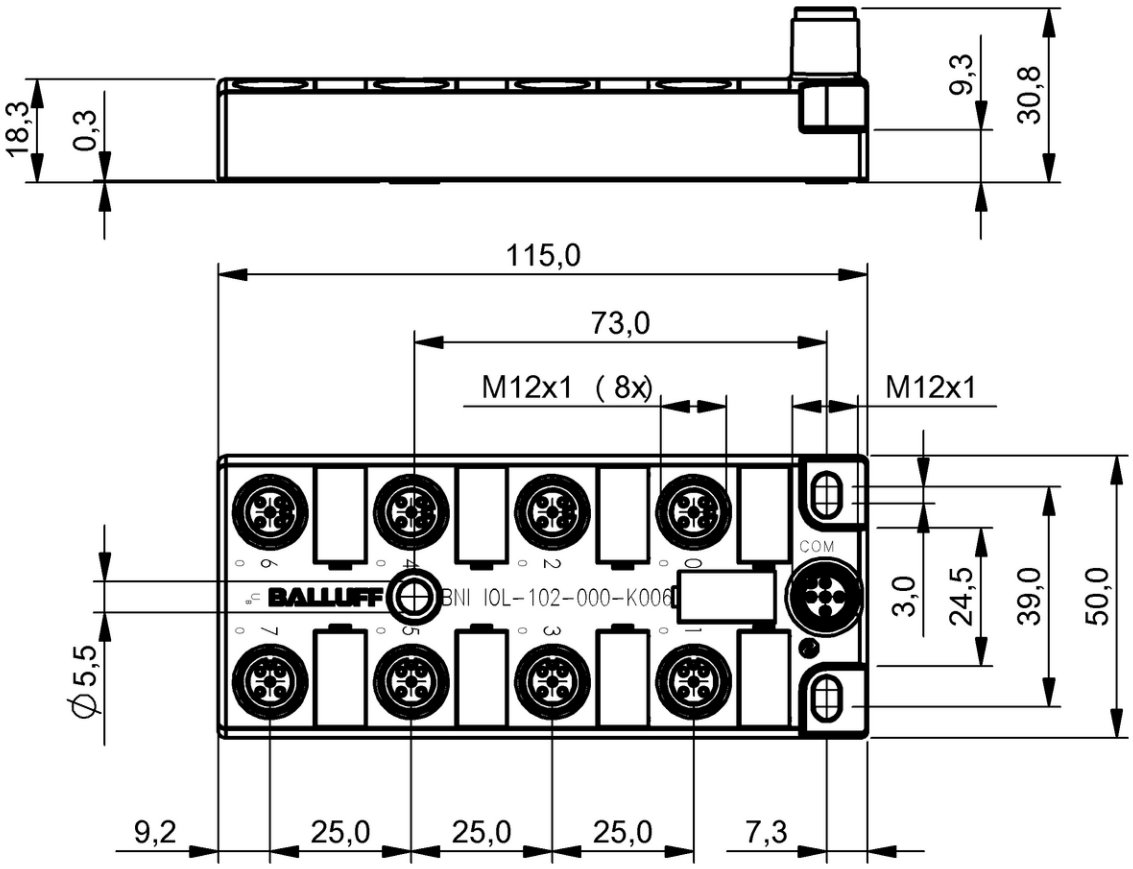

BNI0005

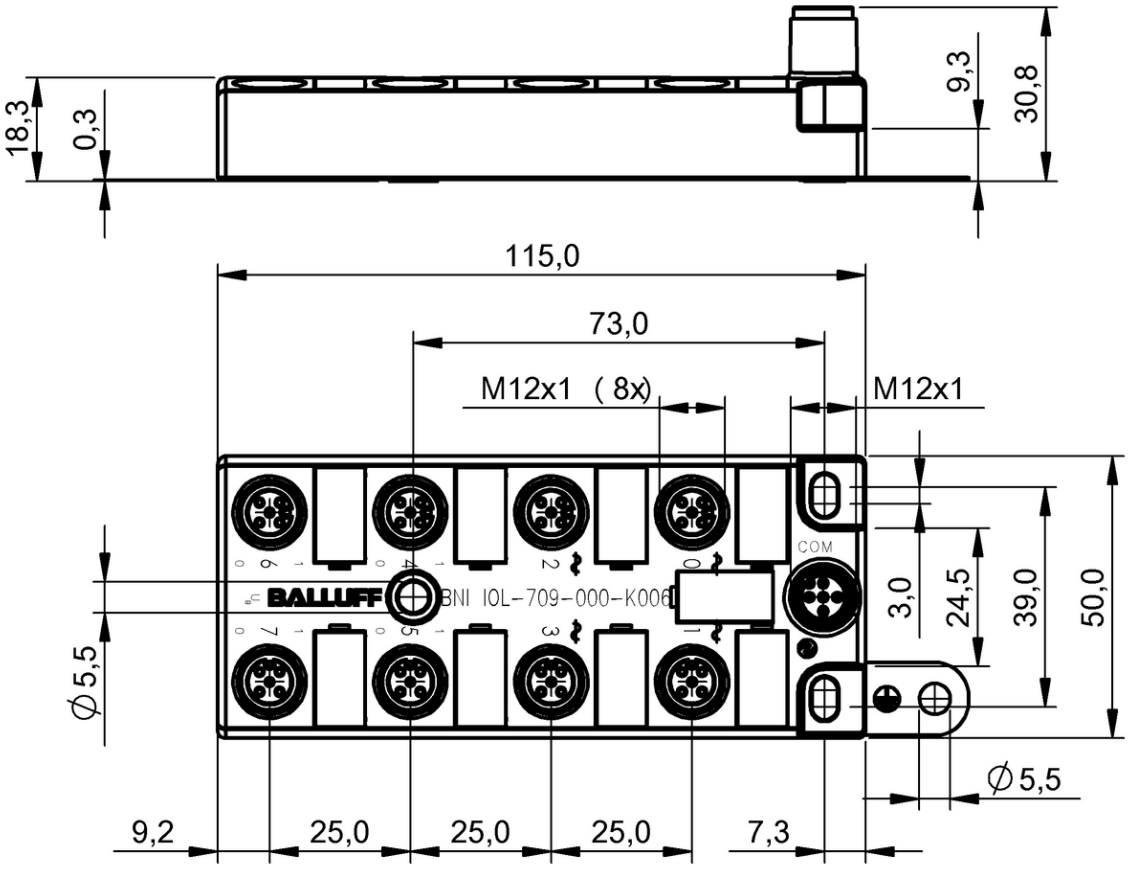

BNI0007

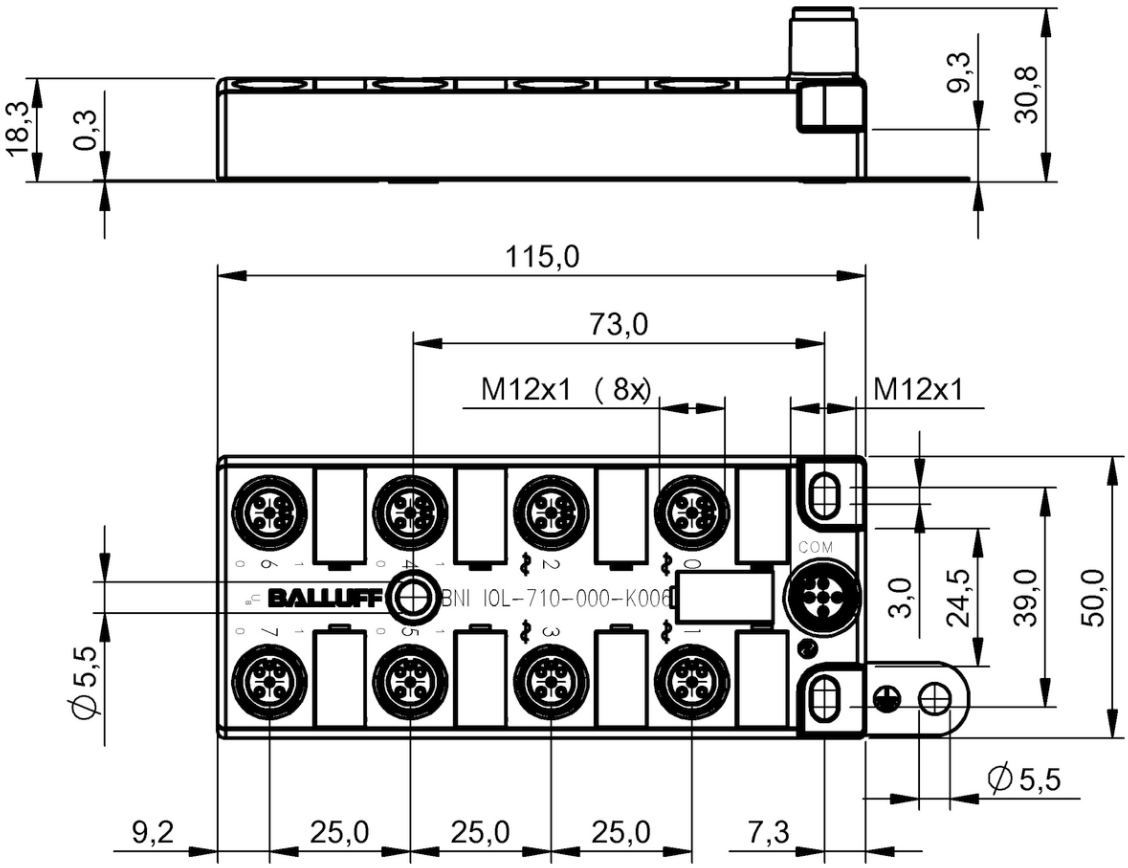

BNI0008

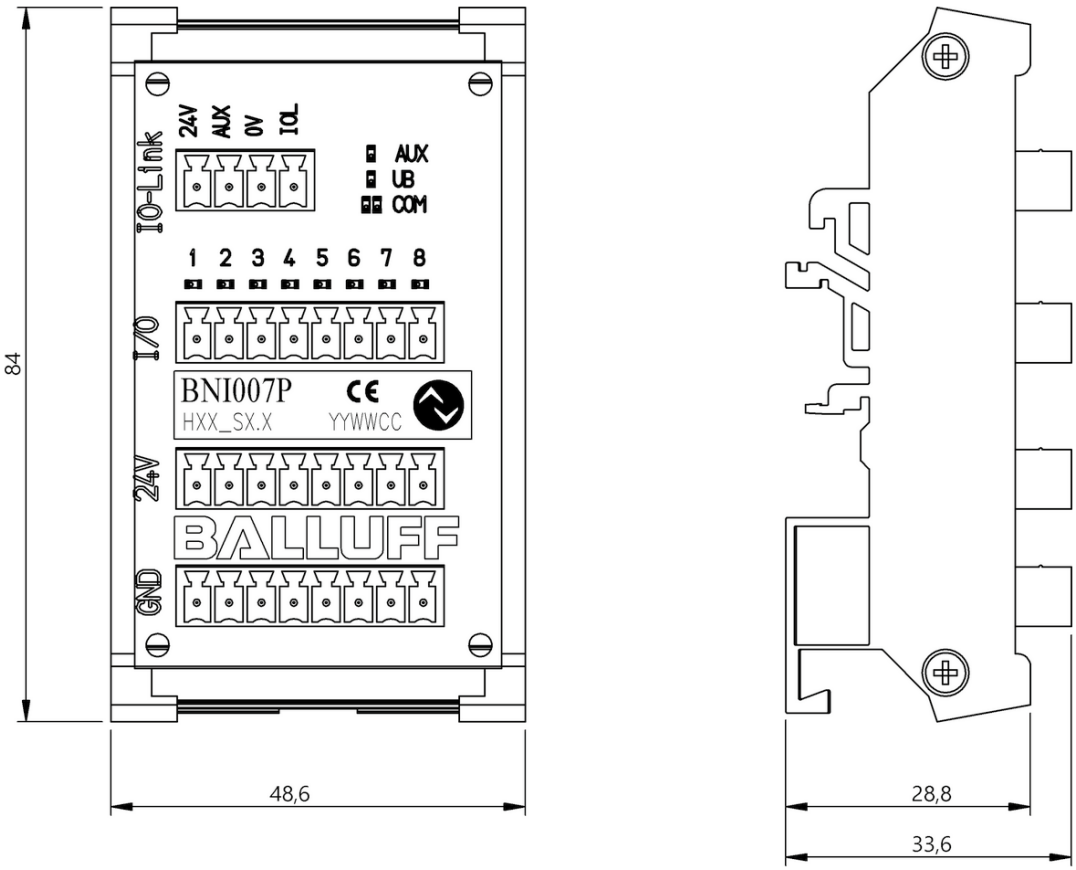

BNI007P

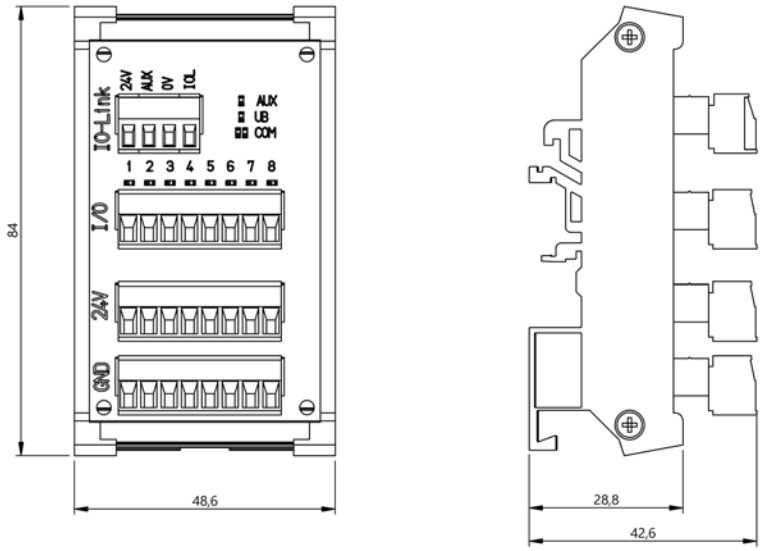

BNI004K

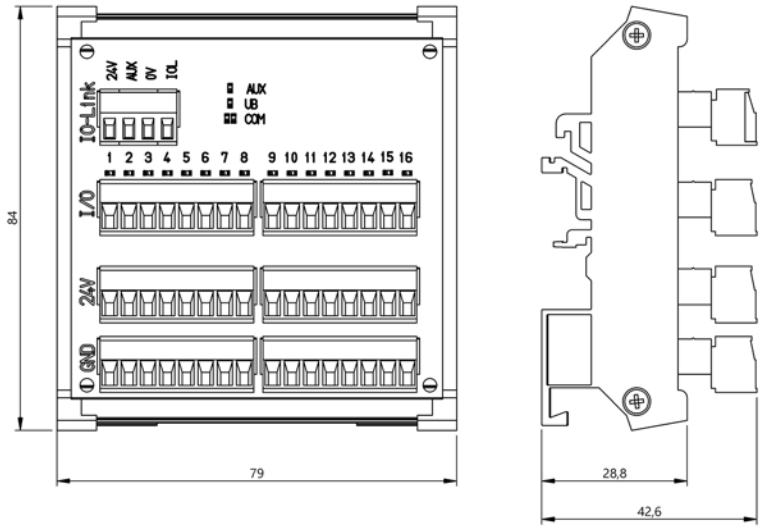

BNI004L

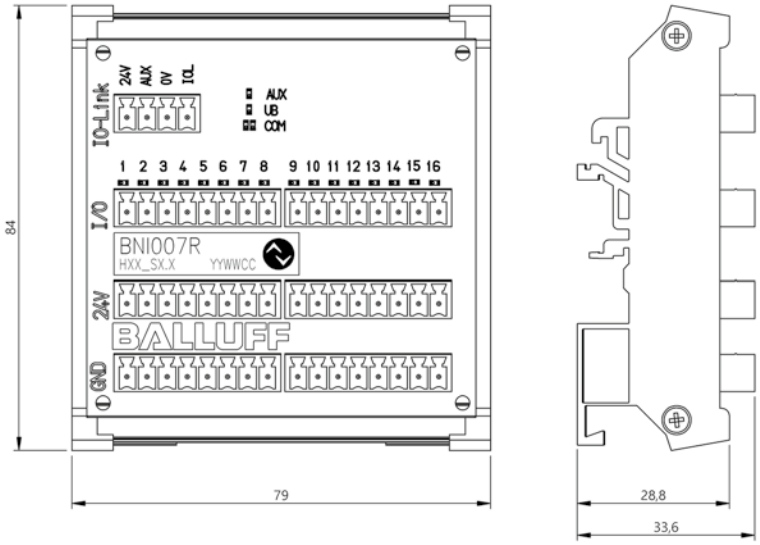
IO-Link
24V
AUX
0V
IO_L
AUX
UB
COM
1 2 3 4 5 6 7 8 9 10 11 12 13 14 15 16
I/O
BNI007R
HXX_SX.X
YYWWCC
24V
BALLUFF
GND
84
79
28,8
33,6

BNI007R

	BNI006J BNI IOL-750-V08-K007	BNI006E BNI IOL-750-V09-K007	BNI006K BNI IOL-750-V10-K007
Version	Valve interface	Valve interface	Valve interface
Application	Festo with D-Sub female, 25-pin, GND on Pin 25, Bosch Rexroth LS04, Bürkert Typ 8640	Festo with D-Sub female, 25-pin, GND on Pin 25, Bosch Rexroth LS04	SMC VQC 1000/2000/4000
Interface	IO-Link 1.1	IO-Link 1.1	IO-Link 1.1
Operating voltage Ub	18...30.2 VDC	18...30.2 VDC	18...30.2 VDC
Connection (COM 1)	M12x1-Male, 5-pin, A-coded	M12x1-Male, 5-pin, A-coded	M12x1-Male, 5-pin, A-coded
Valve terminal connection	—	—	—
Cable length L	0.6 m	0.6 m	0.6 m
Outputs, number	24	16	24
Output current max. UA, actuator	—	—	—
Current sum UA, actuator	4 A	4 A	4 A
Function	3-pin connection, Actuator supply on Pin 1	3-pin connection, Actuator supply on Pin 1	3-pin connection, Actuator supply on Pin 1
Housing material	PA	PA	PA
Dimension	53 x 61 x 12.5 mm	53 x 61 x 12.5 mm	53 x 61 x 12.5 mm
Ambient temperature	-5...55 °C	-5...55 °C	-5...55 °C
IP rating	IP40, plugged in	IP40, plugged in	IP40, plugged in
Transfer rate	COM2 (38.4 kBaud)	COM2 (38.4 kBaud)	COM2 (38.4 kBaud)
Process data cycle min.	3.5 ms	3.0 ms	3.5 ms
Process data IN	—	—	—
Process data OUT	4 bytes	2 bytes	4 bytes
Productview	Page 116	Page 116	Page 116

	BNI006H BNI IOL-750-V11-K007	BNI006L BNI IOL-750-V13-K007	BNI006N BNI IOL-751-V08-K007	BNI006M BNI IOL-751-V09-K007	BNI006P BNI IOL-751-V10-K007
	Valve interface	Valve interface	Power Aux valve terminal connector	Power Aux valve terminal connector	Power Aux valve terminal connector
	SMC VQC 1000/2000/4000	Numatics	Festo with D-Sub female, 25-pin, GND on Pin 25, Bosch Rexroth LS04, Bürkert Typ 8640	Festo with D-Sub female, 25-pin, GND on Pin 25, Bosch Rexroth LS04	SMC VQC 1000/2000/4000
	IO-Link 1.1	IO-Link 1.1	IO-Link 1.1	IO-Link 1.1	IO-Link 1.1
	18...30.2 VDC	18...30.2 VDC	18...30.2 VDC	18...30.2 VDC	18...30.2 VDC
	M12x1-Male, 5-pin, A-coded	M12x1-Male, 5-pin, A-coded	M12x1-Male, 5-pin, A-coded	M12x1-Male, 5-pin, A-coded	M12x1-Male, 5-pin, A-coded
	—	—	—	—	—
	0.6 m	0.6 m	0.6 m	0.6 m	0.6 m
	16	22	24	16	24
	—	—	—	—	—
	4 A	4 A	4 A	4 A	4 A
	3-pin connection, Actuator supply on Pin 1	3-pin connection, Actuator supply on Pin 1	4-pin connection, Power Aux on Pin 2	4-pin connection, Power Aux on Pin 2	4-pin connection, Power Aux on Pin 2
	PA	PA	PA	PA	PA
	53 x 61 x 12.5 mm	53 x 61 x 12.5 mm	53 x 61 x 12.5 mm	53 x 61 x 12.5 mm	53 x 61 x 12.5 mm
	-5...55 °C	-5...55 °C	-5...55 °C	-5...55 °C	-5...55 °C
	IP40, plugged in	IP40, plugged in	IP40, plugged in	IP40, plugged in	IP40, plugged in
	COM2 (38.4 kBaud)	COM2 (38.4 kBaud)	COM2 (38.4 kBaud)	COM2 (38.4 kBaud)	COM2 (38.4 kBaud)
	3.0 ms	3.5 ms	3.5 ms	3.0 ms	3.5 ms
	—	—	—	—	—
	2 bytes	4 bytes	4 bytes	2 bytes	4 bytes
	Page 116	Page 116	Page 116	Page 116	Page 116

	BNI006T BNI IOL-751-V11-K007	BNI006R BNI IOL-751-V13-K007	BNI006Y BNI IOL-752-V08-K007
Version	Power Aux valve terminal connector	Power Aux valve terminal connector	Power Aux valve terminal connector
Application	SMC VQC 1000/2000/4000	Numatics	Festo with D-Sub female, 25-pin, GND on Pin 25, Bosch Rexroth LS04, Bürkert Typ 8640
Interface	IO-Link 1.1	IO-Link 1.1	IO-Link 1.1
Operating voltage Ub	18...30.2 VDC	18...30.2 VDC	18...30.2 VDC
Connection (COM 1)	M12x1-Male, 5-pin, A-coded	M12x1-Male, 5-pin, A-coded	M12x1-Male, 5-pin, A-coded
Valve terminal connection	—	—	—
Cable length L	0.6 m	0.6 m	0.6 m
Outputs, number	16	22	24
Output current max. UA, actuator	—	—	—
Current sum UA, actuator	4 A	4 A	4 A
Function	4-pin connection, Power Aux on Pin 2	4-pin connection, Power Aux on Pin 2	5-pin connection, Power Aux on Pin 2, also 0V on Pin 5
Housing material	PA	PA	PA
Dimension	53 x 61 x 12.5 mm	53 x 61 x 12.5 mm	53 x 61 x 12.5 mm
Ambient temperature	-5...55 °C	-5...55 °C	-5...55 °C
IP rating	IP40, plugged in	IP40, plugged in	IP40, plugged in
Transfer rate	COM2 (38.4 kBaud)	COM2 (38.4 kBaud)	COM2 (38.4 kBaud)
Process data cycle min.	3.0 ms	3.5 ms	3.5 ms
Process data IN	—	—	—
Process data OUT	2 bytes	4 bytes	4 bytes
Productview	Page 116	Page 116	Page 116

	BNI006U BNI IOL-752-V09-K007	BNI006Z BNI IOL-752-V10-K007	BNI006W BNI IOL-752-V11-K007	BNI006F BNI IOL-752-V13-K007	BNI004W BNI IOL-770-V06-A027
	Power Aux valve terminal connector	Power Aux valve terminal connector	Power Aux valve terminal connector	Power Aux valve terminal connector	Power Aux valve terminal connector
	Festo with D-Sub female, 25-pin, GND on Pin 25, Bosch Rexroth LS04	SMC VQC 1000/2000/4000	SMC VQC 1000/2000/4000	Numatics	SMC VQC 1000/2000/4000
	IO-Link 1.1	IO-Link 1.1	IO-Link 1.1	IO-Link 1.1	IO-Link 1.1
	18...30.2 VDC	18...30.2 VDC	18...30.2 VDC	18...30.2 VDC	18...30.2 VDC
	M12x1-Male, 5-pin, A-coded	M12x1-Male, 5-pin, A-coded	M12x1-Male, 5-pin, A-coded	M12x1-Male, 5-pin, A-coded	M12x1-Male, 5-pin, A-coded
	—	—	—	—	—
	0.6 m	0.6 m	0.6 m	0.6 m	0.5 m
	16	24	16	22	24
	—	—	—	—	—
	4 A	4 A	4 A	4 A	4.0 A
	5-pin connection, Power Aux on Pin 2, also 0V on Pin 5	5-pin connection, Power Aux on Pin 2, also 0V on Pin 5	5-pin connection, Power Aux on Pin 2, also 0V on Pin 5	5-pin connection, Power Aux on Pin 2, also 0V on Pin 5	4-pin connection, Power Aux on Pin 2, Diagnostics
	PA	PA	PA	PA	Aluminum
	53 x 61 x 12.5 mm	53 x 61 x 12.5 mm	53 x 61 x 12.5 mm	53 x 61 x 12.5 mm	31.8 x 31.8 x 185 mm
	-5...55 °C	-5...55 °C	-5...55 °C	-5...55 °C	-5...70 °C
	IP40, plugged in	IP40, plugged in	IP40, plugged in	IP40, plugged in	IP67, plugged in
	COM2 (38.4 kBaud)	COM2 (38.4 kBaud)	COM2 (38.4 kBaud)	COM2 (38.4 kBaud)	COM2 (38.4 kBaud)
	3.0 ms	3.5 ms	3.0 ms	3.5 ms	5.5 ms
	—	—	—	—	9 bytes
	2 bytes	4 bytes	2 bytes	4 bytes	4 bytes
	Page 116	Page 116	Page 116	Page 116	Page 116

Do you need more details? Our Product Finder at www.balluff.com provides you with product-specific information, including technical drawings, data sheets, user guides and more for each individual product. All items are available for download.

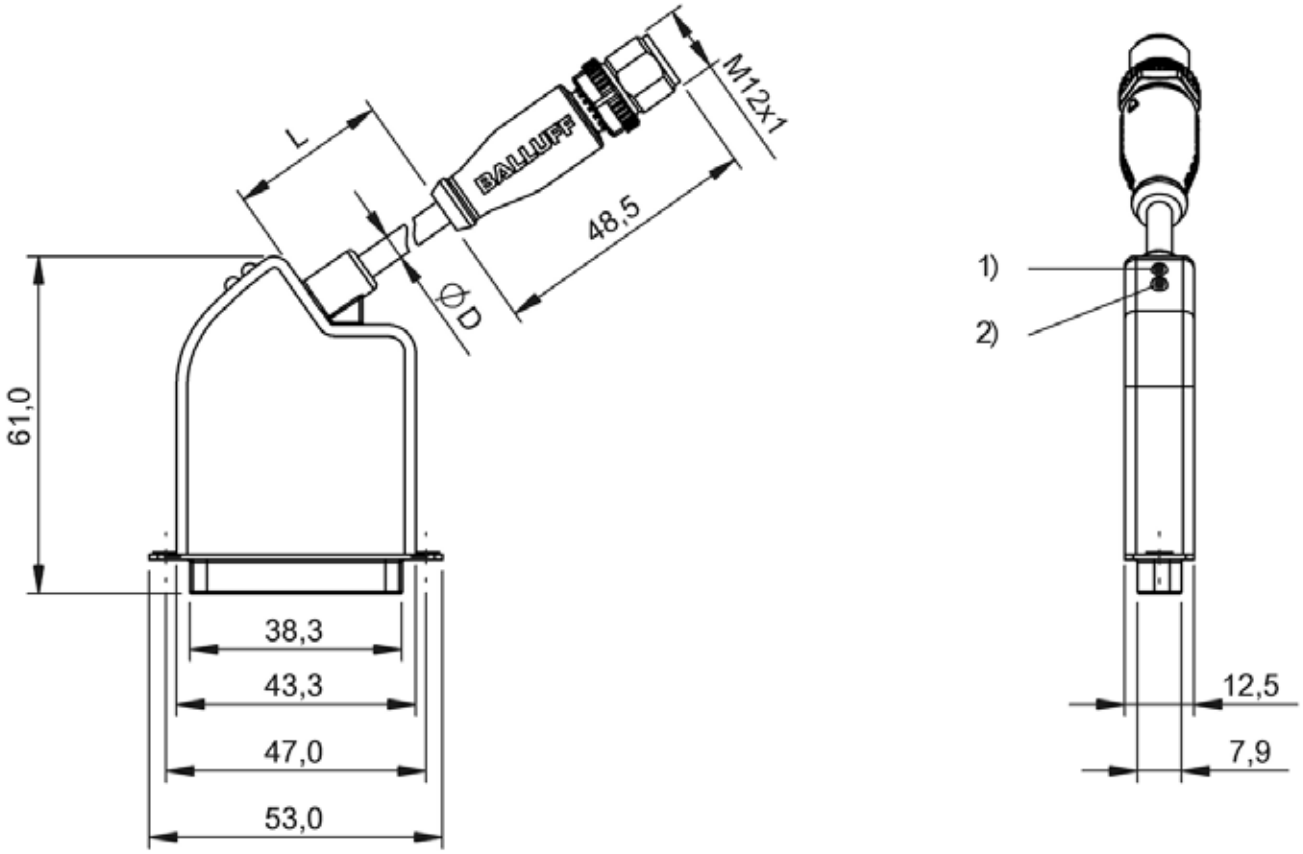

BNI006J, BNI006E, BNI006K, BNI006H, BNI006L, BNI006N, BNI006M, BNI006P, BNI006T, BNI006R, BNI006Y, BNI006U, BNI006Z, BNI006W, BNI006F

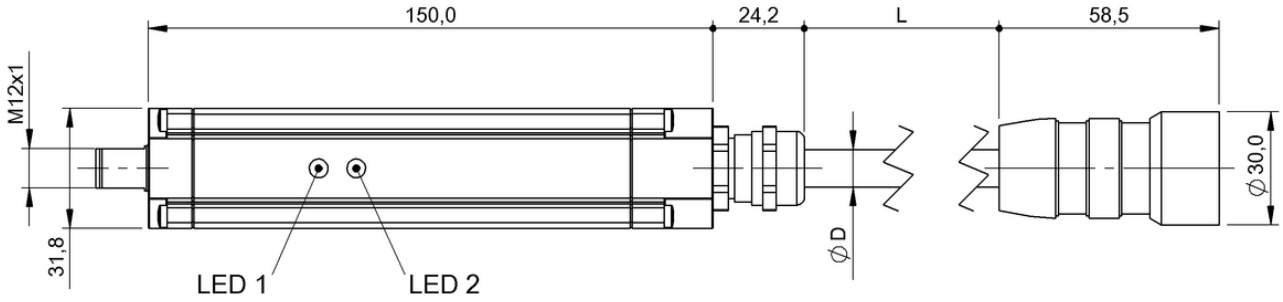

BNI004W

	BNI005M BNI IOL-771-000-K027	BNI00CA BNI IOL-771-002-K027-003	
Version	Universal cable I/O interface	Universal cable I/O interface	
Interface	IO-Link 1.1	IO-Link 1.1	
Operating voltage Ub	18...30.2 VDC	18...30.2 VDC	
Connection (COM 1)	M12x1-Male, 5-pin, A-coded	M12x1-Male, 5-pin, A-coded	
Connection for sensor	open cable end-Leads	open cable end-Leads	
Cable length L	0.5 m	3 m	
Digital inputs	16x PNP, Type 3	16x PNP, Type 3	
Digital outputs	16x PNP	16x PNP	
Configurable inputs/outputs	yes	yes	
Output current max.	—	—	
Additional function	—	—	
Housing material	PA	PA	
Dimension	43.3 x 16.3 x 88.3 mm	43.3 x 16.3 x 88.3 mm	
Ambient temperature	-5...55 °C	-5...55 °C	
IP rating	IP54, to open cable end	IP54, to open cable end	
Transfer rate	COM2 (38.4 kBaud)	COM2 (38.4 kBaud)	
Process data cycle min.	4 ms	4 ms	
Process data IN	2 bytes	2 bytes	
Process data OUT	2 bytes	2 bytes	
Productview	Page 120	Page 120	

	BNI005N BNI IOL-772-000-K027	BNI00CC BNI IOL-772-002-K027-003	BNI00AE BNI IOL-772-002-E032	
	Universal cable I/O interface	Universal cable I/O interface	Universal cable I/O interface	
	IO-Link 1.1	IO-Link 1.1	IO-Link 1.1	
	18...30.2 VDC	18...30.2 VDC	18...30.2 VDC	
	M12x1-Male, 5-pin, A-coded	M12x1-Male, 5-pin, A-coded	M12x1-Male, 4-pin, A-coded	
	open cable end-Leads	open cable end-Leads	open cable end-Leads	
	0.5 m	3 m	1.3 m	
	8x PNP, Type 3	8x PNP, Type 3	8x PNP, Type 3	
	8x PNP	8x PNP	8x PNP	
	yes	yes	yes	
	—	—	—	
	—	—	—	
	PA	PA	Stainless steel (1.4404) PTFE	
	43.3 x 16.3 x 88.3 mm	43.3 x 16.3 x 88.3 mm	Ø 18 x 117 mm	
	-5...55 °C	-5...55 °C	-5...60 °C	
	IP54, to open cable end	IP54, to open cable end	IP69K, IP68, when threaded in	
	COM2 (38.4 kBaud)	COM2 (38.4 kBaud)	COM2 (38.4 kBaud)	
	3.2 ms	3.2 ms	8.4 ms	
	1 bytes	1 bytes	1 bytes	
	1 bytes	1 bytes	1 bytes	
	Page 120	Page 120	Page 120	

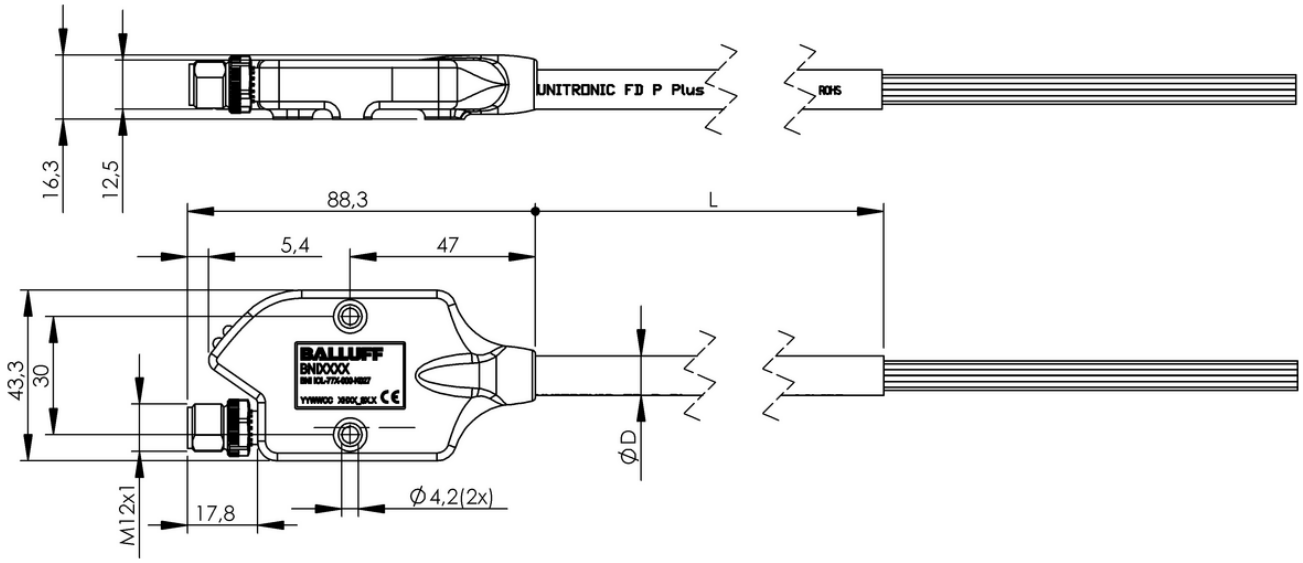

BNI005M, BNI00CA, BNI005N, BNI00CC

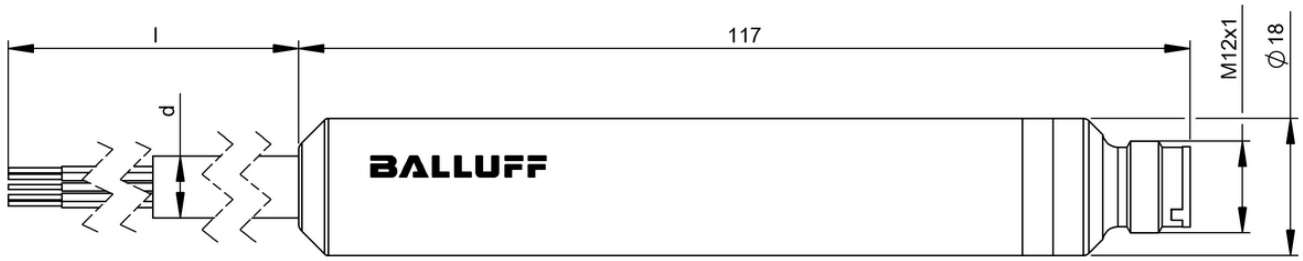

BNI00AE

Efficient communication without wear

INDUCTIVE COUPLERS

Fixed wiring of sensors and actuators comes with drawbacks: cable and contacts are often severely loaded in automation, and cables can fatigue and break. In the worst case scenario this can result in a machine failure. Our BIC inductive couplers transmit data and power contactlessly across an air gap. Thus, no mechanical wear is produced. The system availability is higher, the cycle times are shorter and the sequences are more flexible. The units can quickly be disconnected, are easy to handle and are maintenance-free. This enables you to meet new demands quickly.

Features

- No mechanical wear
- Higher system availability, shorter cycle times, more flexible sequences
- Quickly disconnectable, easy to handle, maintenance free

	BIC0086 BIC 1B1-IT1A0-M30EI21-SM4A5A	BIC0087 BIC 2B1-IT1A0-M30EI21-SM4A5A	BIC007L BIC 1B0-ITA50-M30MF1-SM4A5A	
Function	IO-Link	IO-Link	IO-Link signal transmission	
Signal type	bi-directional	bi-directional	bi-directional	
Transmission distance	0...5 mm	0...5 mm	0...10 mm	
Component	Base	Remote	Base	
Interface	—	—	IO-Link 1.1	
Connection	Connector, M12x1-Male	Connector, M12x1-Female	Connector, M12x1-Male, 5-pin	
Rated operating voltage Ue	24 VDC	—	24 VDC	
Output voltage	—	24 VDC	—	
Rated output current	—	1.5 A	—	
Output current max.	—	2.2 A	—	
Housing material	Stainless steel	Stainless steel	Brass, coated	
Dimension	—	—	Ø 30 x 66.2 mm	
Ambient temperature	-5...70 °C	-5...70 °C	-5...55 °C	
IP rating	IP67	IP67	IP67	
Transfer rate	COM2 (38.4 kBaud), COM3 (230.4 kBaud), Diagnostic channel: COM2 (38.4 kBaud)	COM2 (38.4 kBaud), COM3 (230.4 kBaud)	COM2 (38.4 kBaud)	
Additive cycle time	0 ms	0 ms	Device + 2.0 ms	
Process data IN	0…32 bytes, Diagnostic channel: 2 bytes	0…32 bytes	0…32 bytes	
Process data OUT	0…32 bytes, Diagnostic channel: 1 byte	0…32 bytes	0…32 bytes	
SIO mode	no	no	yes	
Productview	Page 127	Page 127	Page 126	

	BIC007E BIC 2B0-ITA50-M30MF1-SM4A5A	BIC007F BIC 1B0-IT1A7-Q40KFU-SM4A4A	BIC007H BIC 2B0-IT1A7-Q40KFU-SM4A5A	BIC0070 BIC 1B0-ITA50-Q40KFU-SM4A4A	BIC0071 BIC 2B0-ITA50-Q40KFU-SM4A5A
	IO-Link signal transmission	IO-Link signal transmission	IO-Link signal transmission	IO-Link signal transmission	IO-Link signal transmission
	bi-directional	bi-directional	bi-directional	bi-directional	bi-directional
	0...10 mm	0...5 mm	0...5 mm	0...5 mm	0...5 mm
	Remote	Base	Remote	Base	Remote
	IO-Link 1.1	IO-Link 1.1	IO-Link 1.1	IO-Link 1.1	IO-Link 1.1
	Connector, M12x1-Male, 5-pin	Connector, M12x1-Male, 4-pin	Connector, M12x1-Female, 5-pin	Connector, M12x1-Male, 4-pin	Connector, M12x1-Female, 5-pin
	—	24 VDC	—	24 VDC	—
	24 VDC	—	24 VDC	—	24 VDC
	650 mA	—	1.7 A	—	500 mA
	5 A / 0.12 ms	—	5 A / 1 ms	—	5 A / 0.05 ms
	Brass, coated	PBTP	PBTP	PBTP	PBTP
	Ø 30 x 72.1 mm	40 x 40 x 62 mm	40 x 40 x 62 mm	40 x 40 x 62 mm	40 x 40 x 62 mm
	-5...55 °C	-5...55 °C	-5...55 °C	-5...65 °C	-5...65 °C
	IP67	IP67	IP67	IP67	IP67
	COM2 (38.4 kBaud)	COM2 (38.4 kBaud), COM3 (230.4 kBaud)	COM2 (38.4 kBaud), COM3 (230.4 kBaud)	COM2 (38.4 kBaud)	COM2 (38.4 kBaud)
	Device + 2.0 ms	Device + 2.8 ms	Device + 2.8 ms	Device + 2.0 ms	Device + 2.0 ms
	0…32 bytes	0…32 bytes	0…32 bytes	0…32 bytes	0…32 bytes
	0…32 bytes	0…32 bytes	0…32 bytes	0…32 bytes	0…32 bytes
	yes	no	no	yes	yes
	Page 126	Page 129	Page 128	Page 128	Page 129

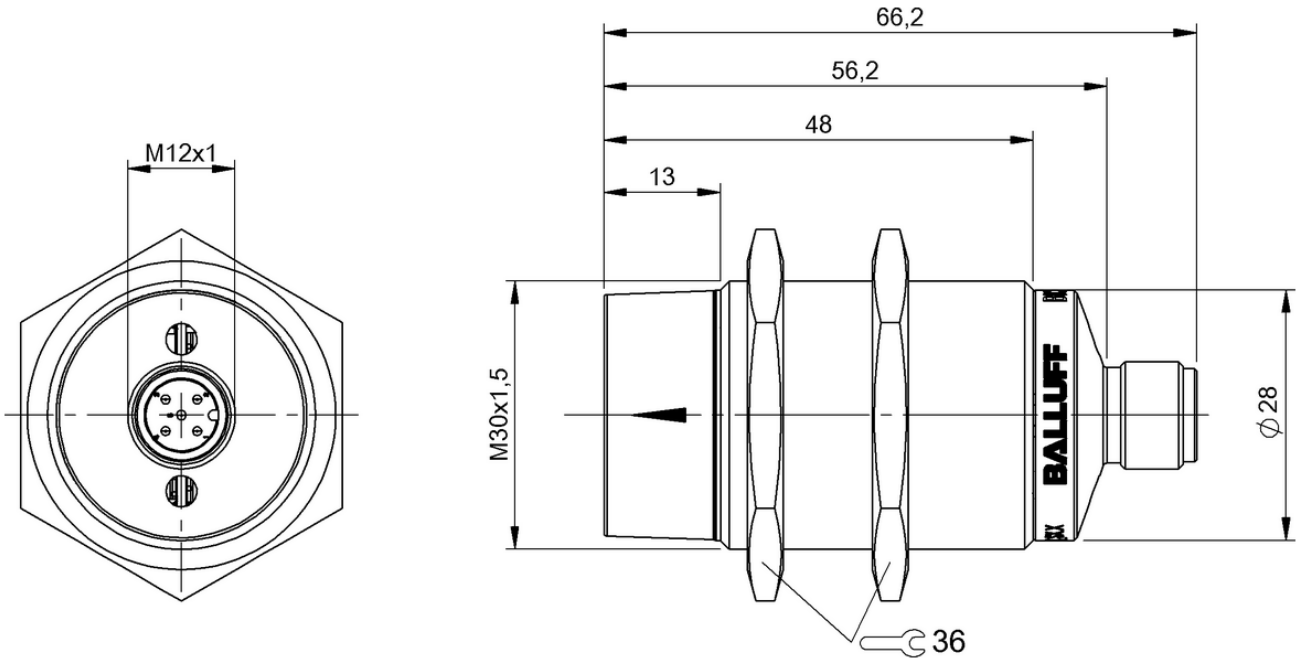

BIC007L

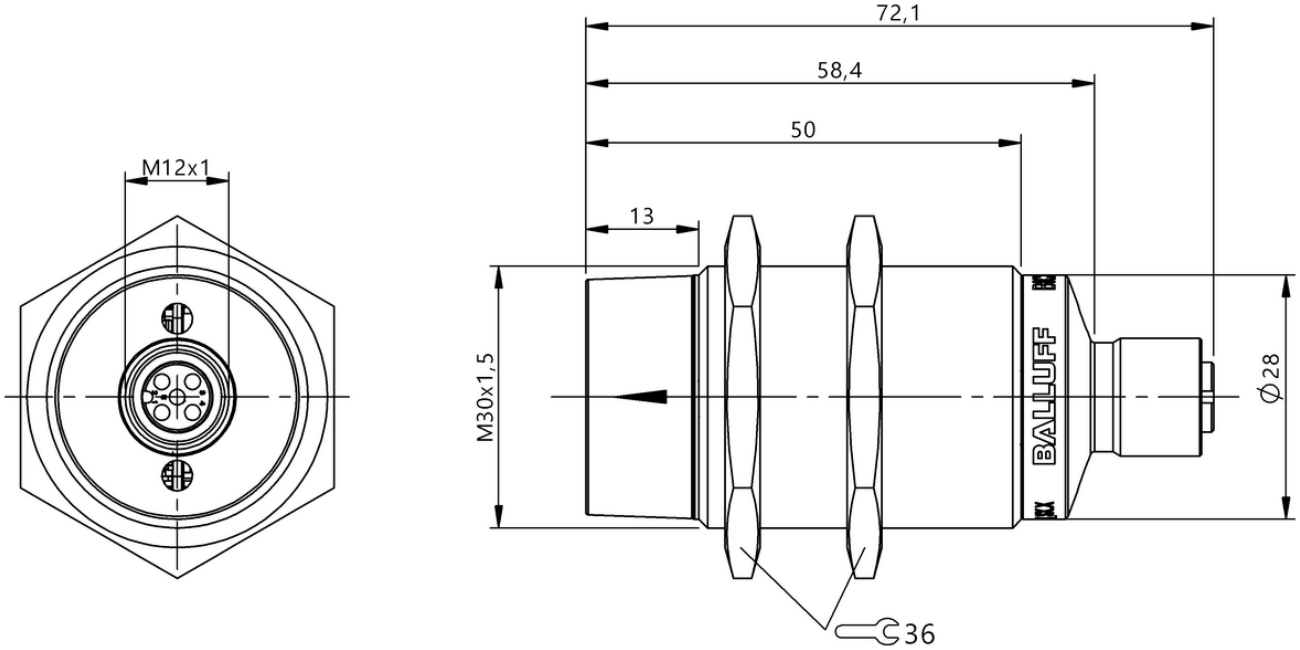

BIC007E

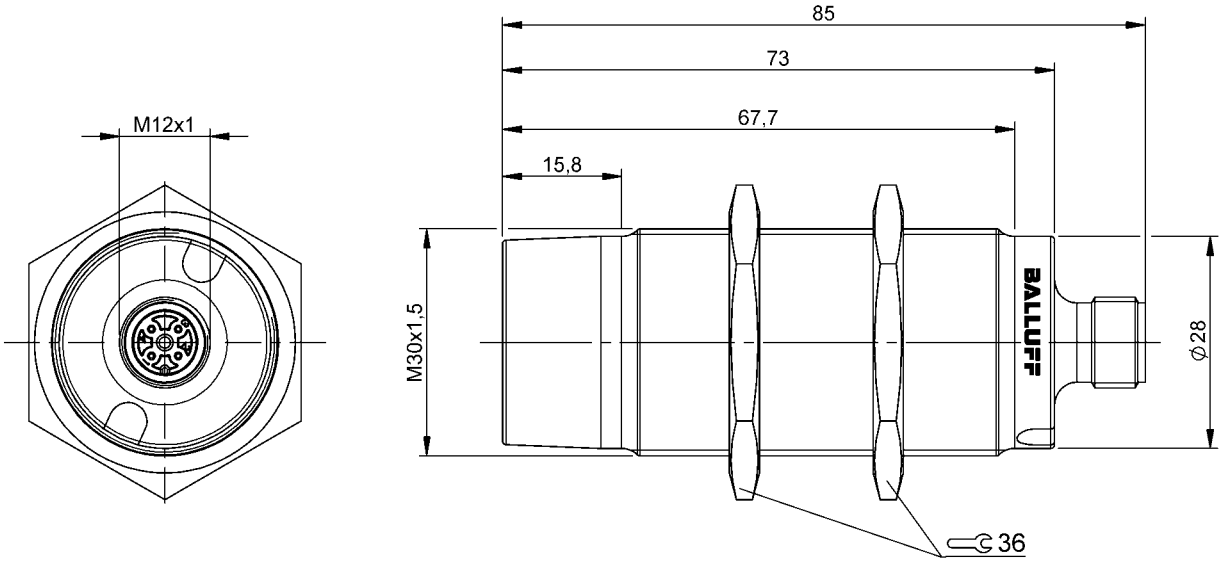

BIC0086

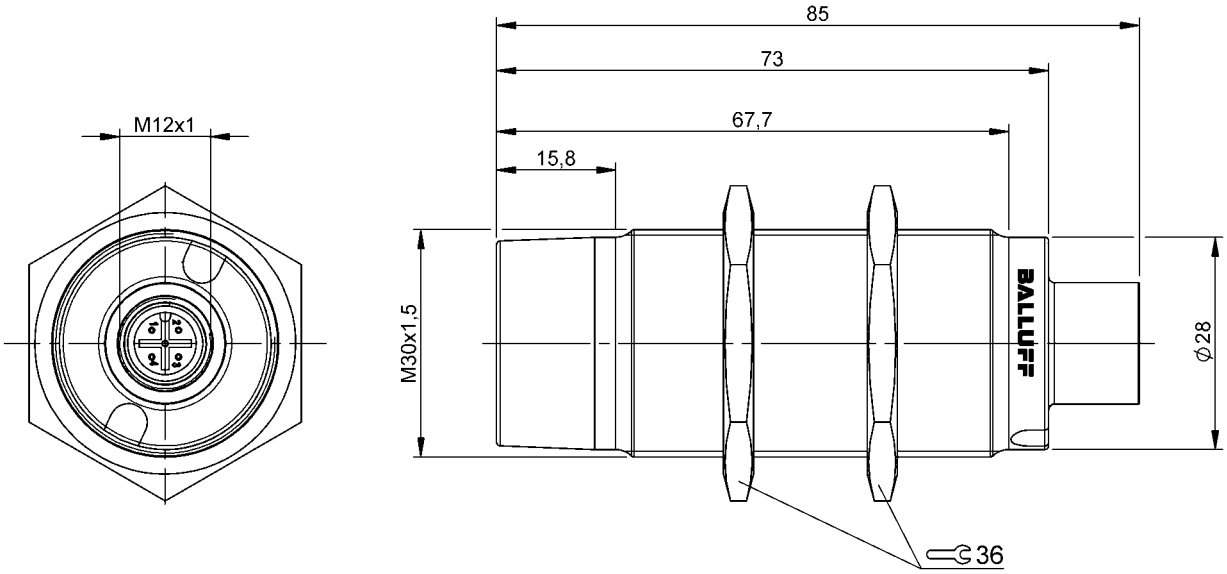

BIC0087

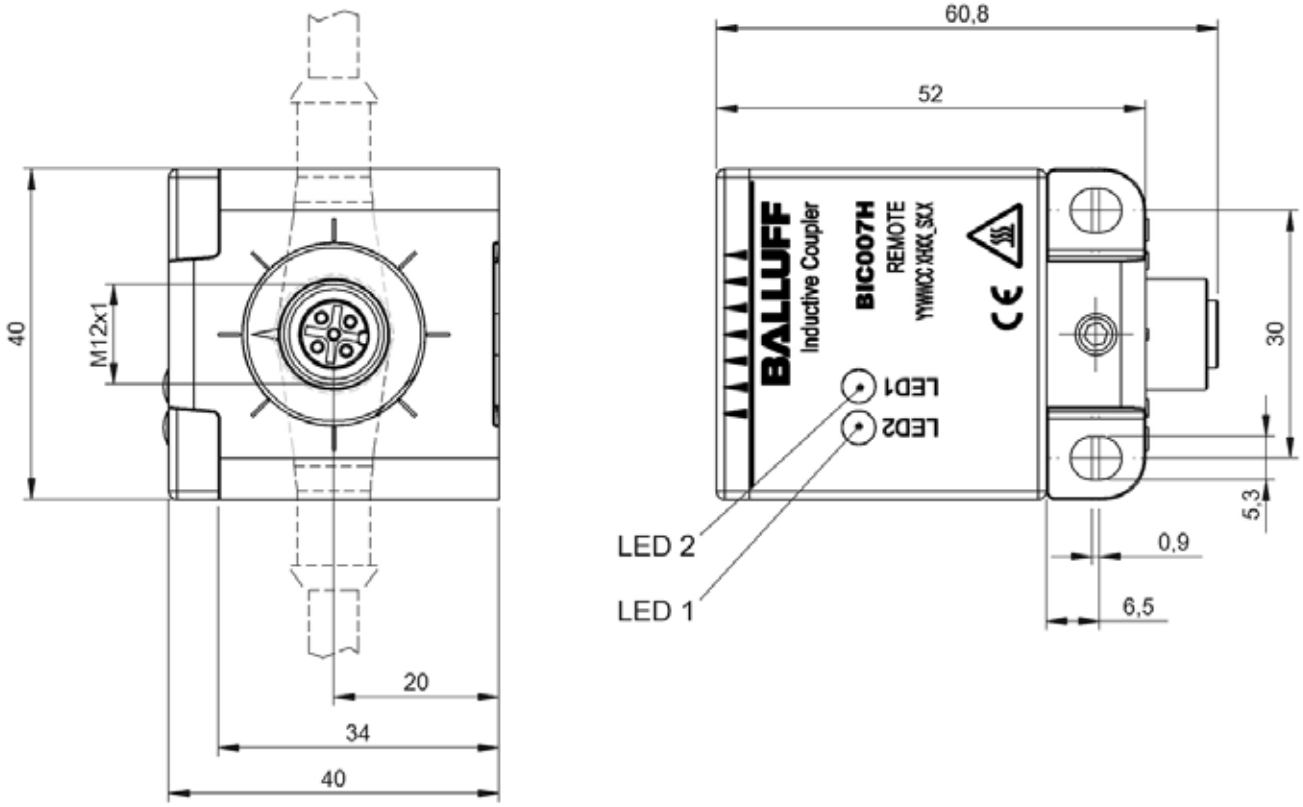

BIC007H

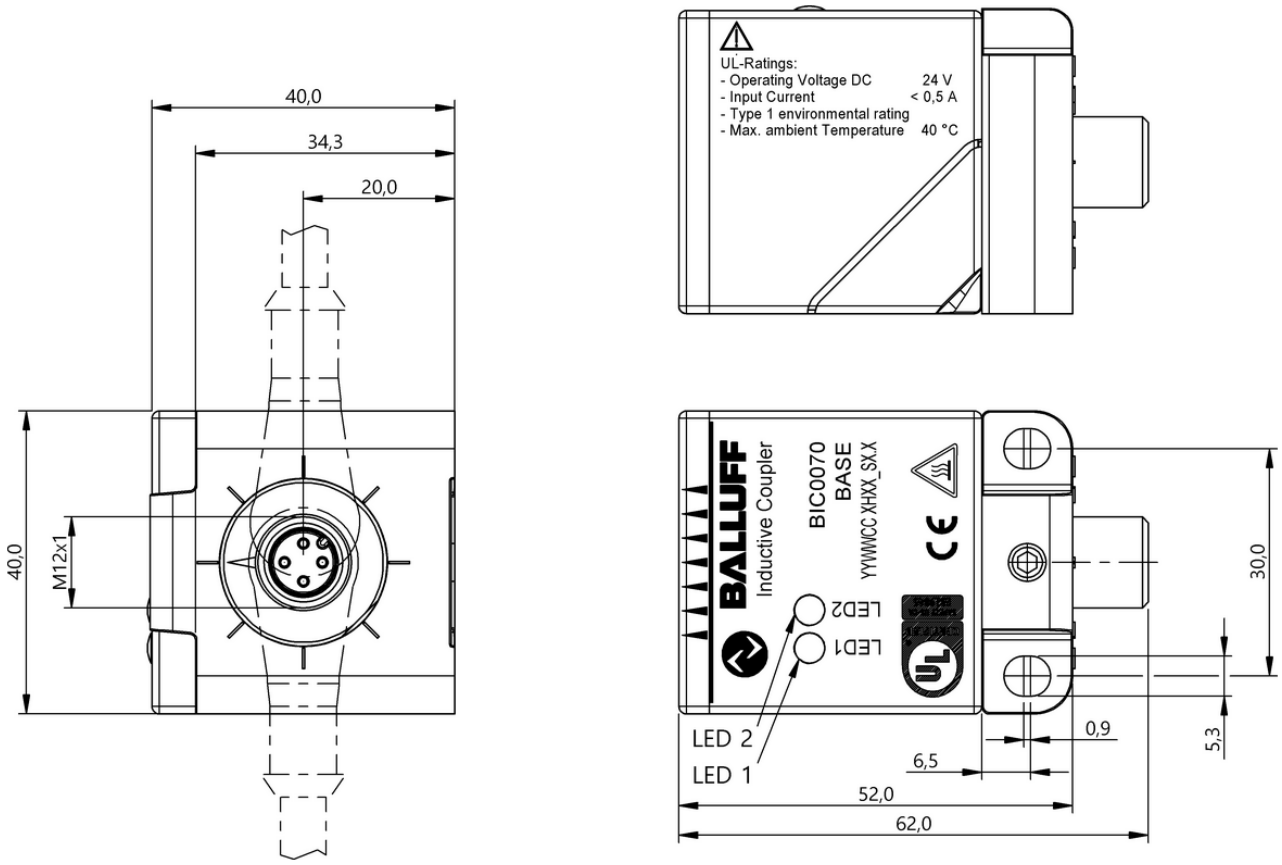

BIC0070

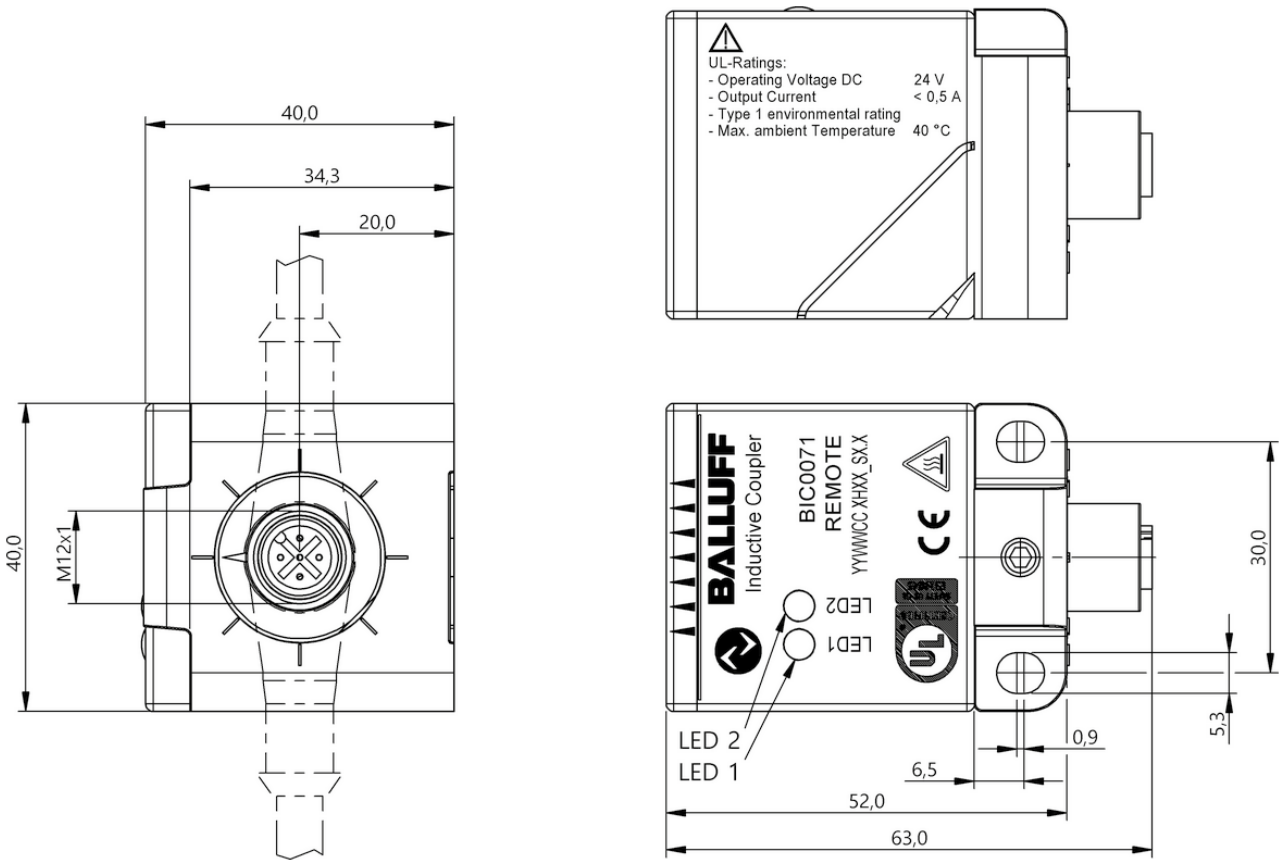

BIC0071

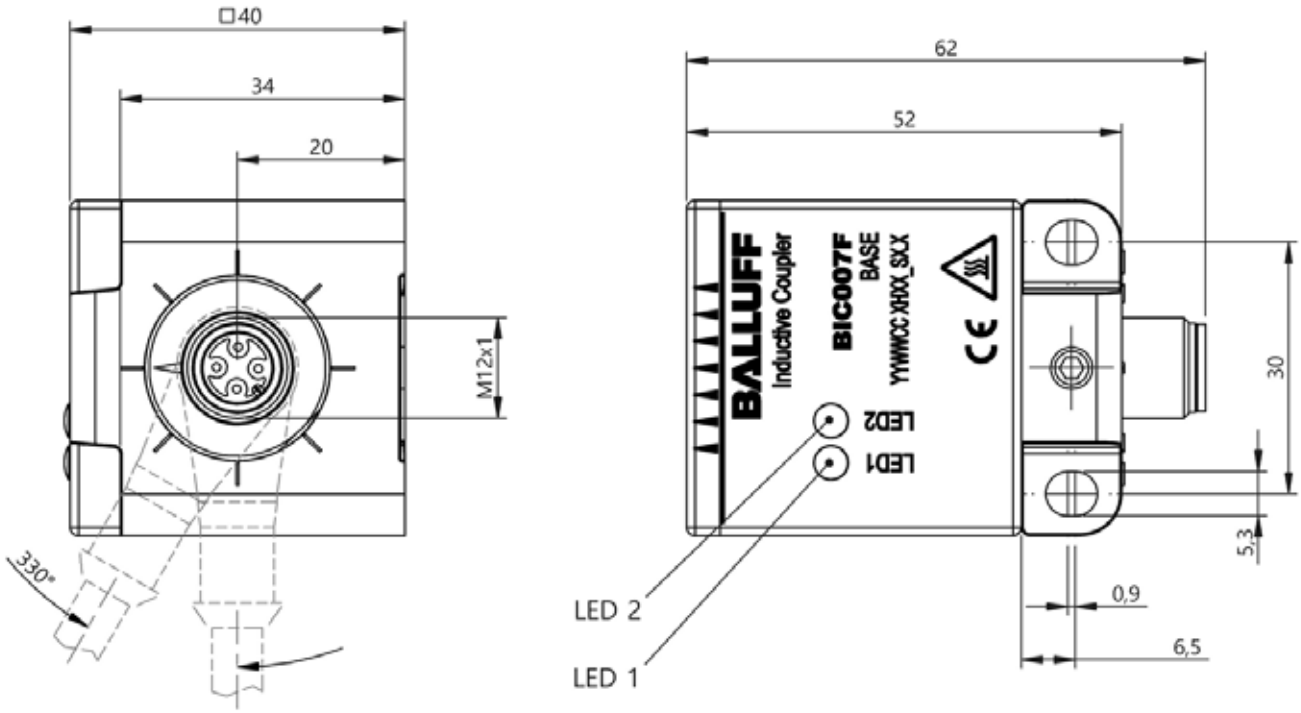

BIC007F

	BIC007J BIC 1I3-P2A50-Q40KFU-EPX0-002-M4CA	BIC007K BIC 2I3-P2A50-Q40KFU-EPX0-002-M4CA	
Function	Signal transmission	Signal transmission	
Signal type	unidirectional	unidirectional	
Digital inputs	—	8x PNP	
Digital outputs	8x PNP	—	
Transmission distance	0...5 mm	0...5 mm	
Component	Base	Remote	
Connection	Connector, M12x1, 12-pin, 0.20 m, PUR	Connector, M12x1, 12-pin, 0.20 m, PUR	
Rated operating voltage Ue	24 VDC	—	
Output voltage	—	24 VDC	
Rated output current	—	500 mA	
Housing material	PBTP	PBTP	
Dimension	40 x 40 x 52 mm	40 x 40 x 52 mm	
Ambient temperature	-5...65 °C	-5...65 °C	
Protection degree	IP67	IP67	
Productview	Page 134	Page 134	

	BIC0077 BIC 1I1-P2A05-M12MM-BPX0-003-M45A	BIC0078 BIC 2I1-P2A05-M12MF-BPX0-003-M44A	BIC007T BIC 1I22-P2A02-M18MN2-EPX07-050	BIC007U BIC 2I22-P2A02-M18MF2-EPX07-050
	Signal transmission	Signal transmission	Signal transmission	Signal transmission
	unidirectional	unidirectional	unidirectional	unidirectional
	—	2x PNP	—	4x PNP
	2x PNP	—	4x PNP	—
	0...2.5 mm	0...2.5 mm	1...3 mm	1...3 mm
	Base	Remote	Base	Remote
	Connector, M12x1, 5-pin, 0.30 m, PUR	Connector, M12x1, 5-pin, 0.30 m, PUR	Cable, 5.00 m, PUR	Cable, 5.00 m, PUR
	24 VDC	—	24 VDC	12 VDC
	—	24 VDC	—	24 VDC
	—	50 mA	—	100 mA
	Brass, coated	Brass, coated	Brass, coated	Brass, coated
	Ø 12 x 65 mm	Ø 12 x 41 mm	Ø 18 x 94 mm	Ø 18 x 61 mm
	-10...50 °C	-10...50 °C	0...50 °C	0...50 °C
	IP67	IP67	IP67	IP67
	Page 135	Page 135	Pager 136	Pager 136

	BIC0009 BIC 1I3-P2A50-M30MI3-SM4ACA	BIC005J BIC 2I3-P2A50-M30MI3-BPX0C-002-M4CA	
Function	Signal transmission	Signal transmission	
Signal type	unidirectional	unidirectional	
Digital inputs	—	8x PNP	
Digital outputs	8x PNP	—	
Transmission distance	0...5 mm	0...5 mm	
Component	Base	Remote	
Connection	Connector, M12x1, 12-pole	Connector, M12x1, 12-pin, 0.20 m, PUR	
Rated operating voltage Ue	24 VDC	—	
Output voltage	—	24 VDC	
Rated output current	—	500 mA	
Housing material	Brass, coated	Brass, coated	
Dimension	Ø 30 x 107 mm	Ø 30 x 85.5 mm	
Ambient temperature	0...55 °C	0...55 °C	
Protection degree	IP67	IP67	
Productview	Page 137	Page 137	

	BIC000A BIC 2I3-P2A50-M30MI3-SM4ACA			
	Signal transmission			
	unidirectional			
	8x PNP			
	—			
	0...5 mm			
	Remote			
	Connector, M12x1, 12-pole			
	—			
	24 VDC			
	500 mA			
	Brass, coated			
	Ø 30 x 106 mm			
	0...55 °C			
	IP67			
	Page 138			

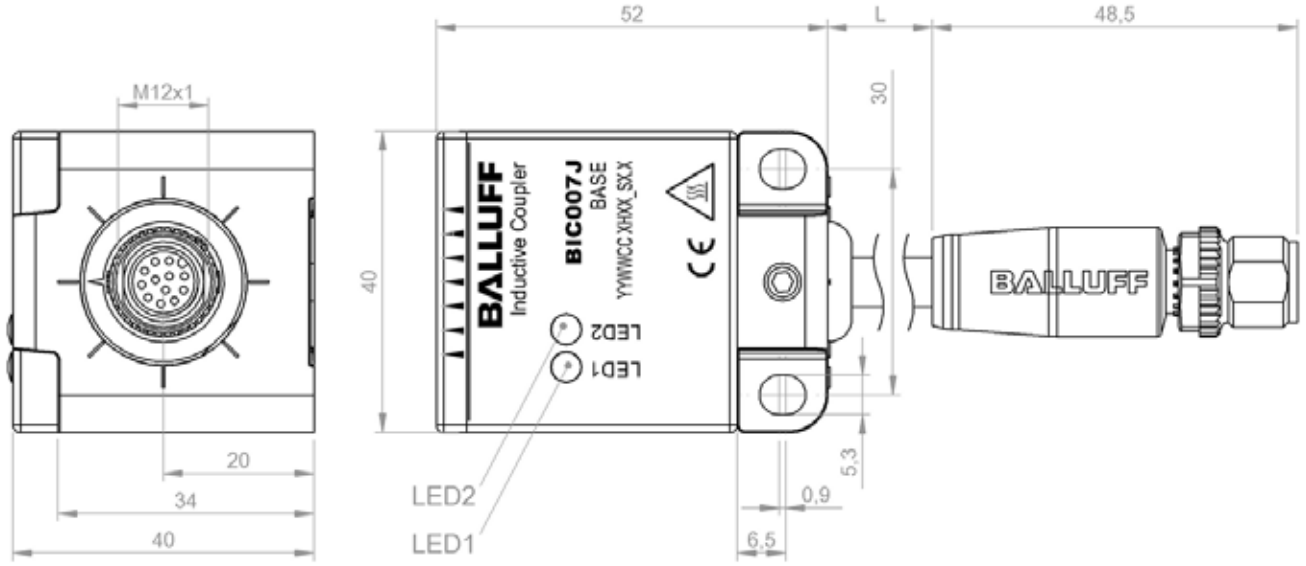

BIC007J

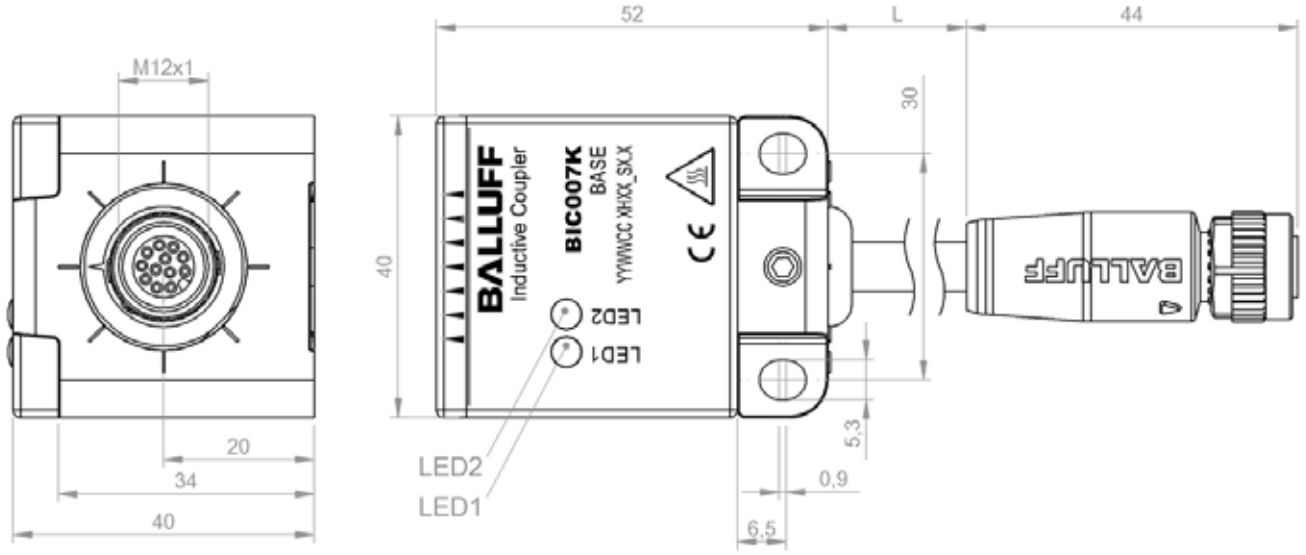

BIC007K

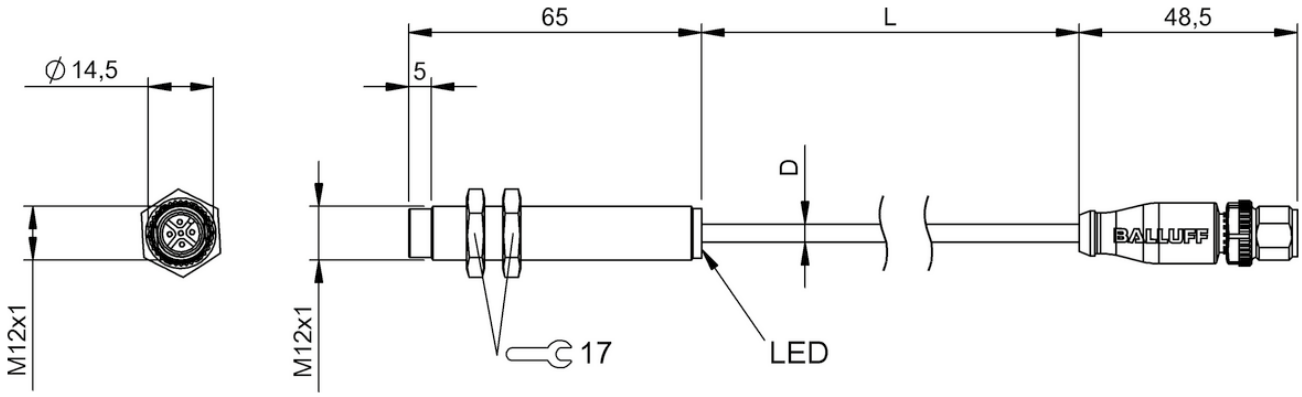

BIC0077

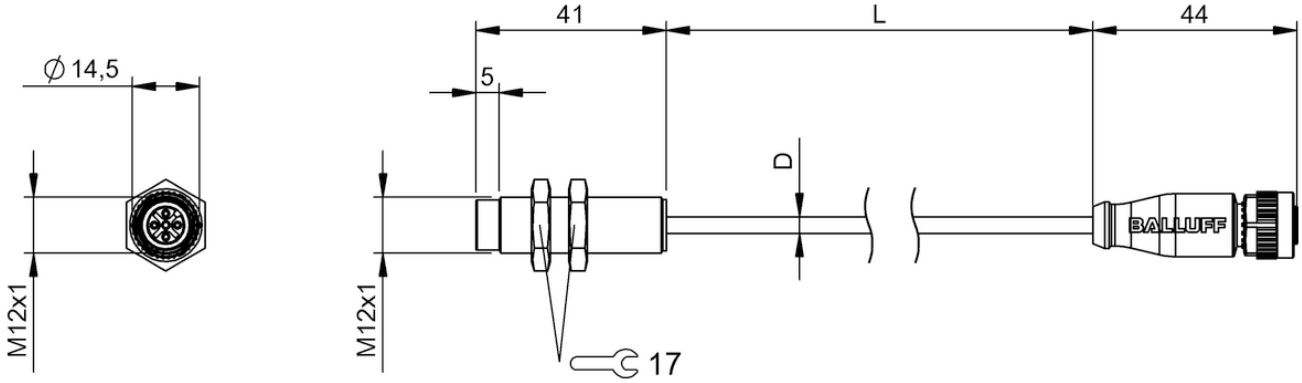

BIC0078

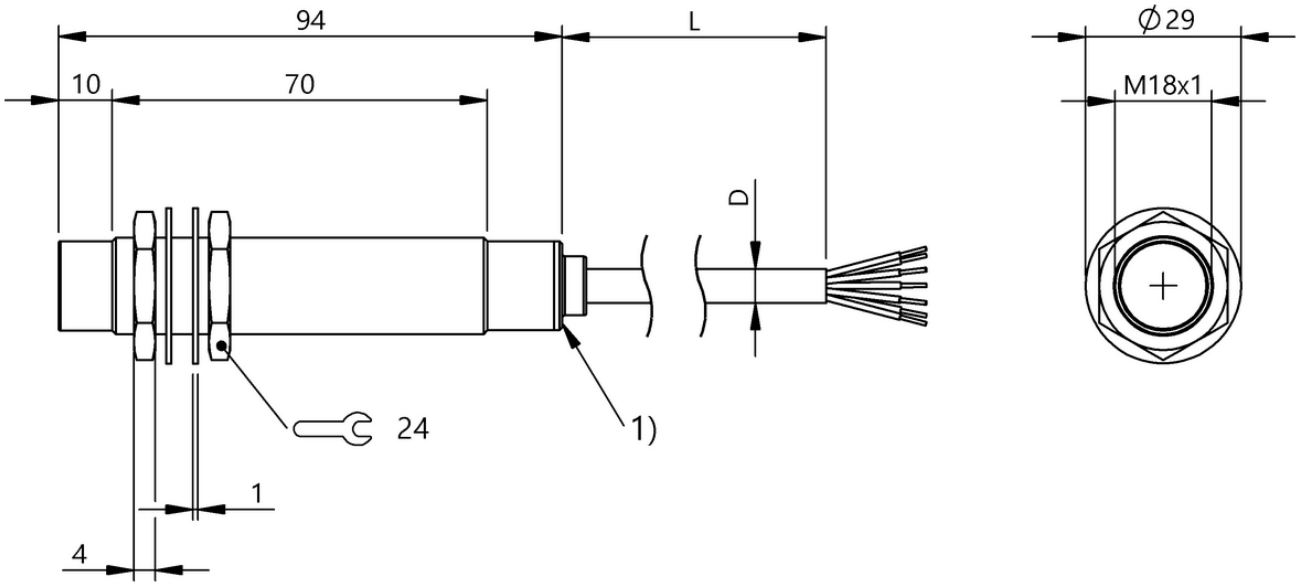

1) LED function indicator

BIC007T

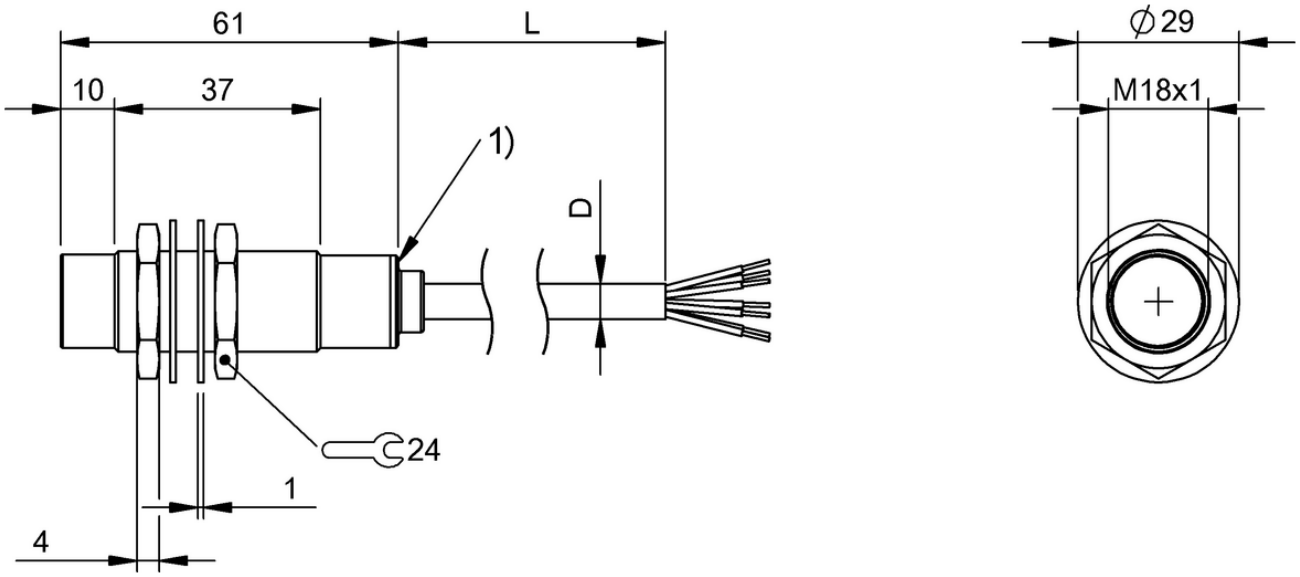

1) LED function indicator

BIC007U

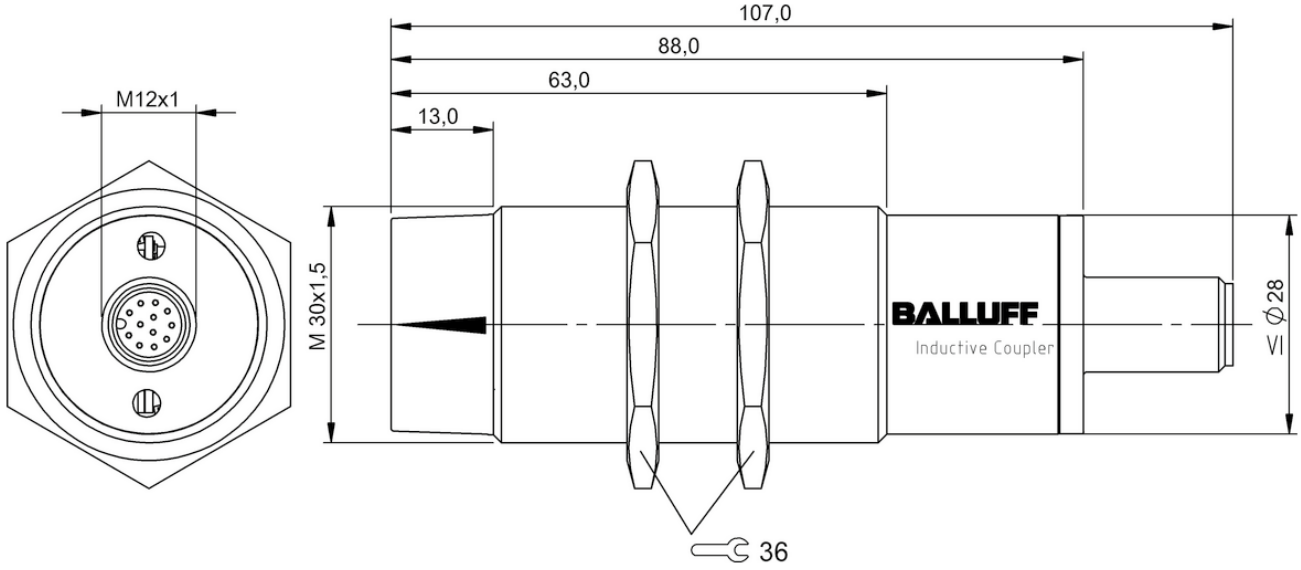

BIC0009

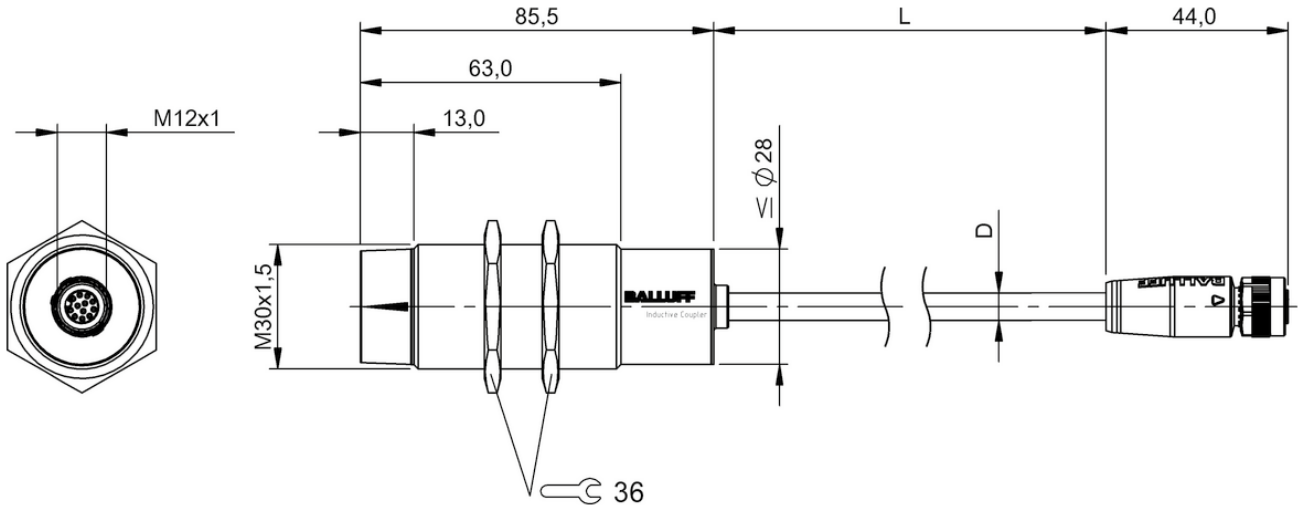

BIC005J

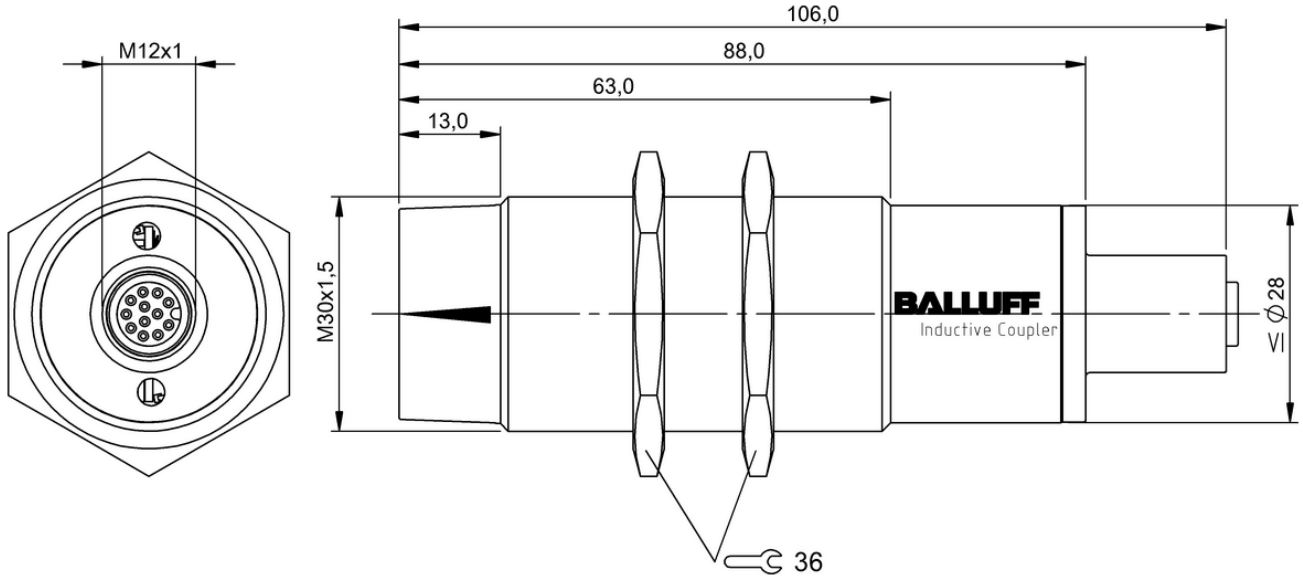
106,0
88,0
63,0
13,0
M12x1
M30x1,5
BALLUFF
Inductive Coupler
Ø28
36

BIC000A

	BIC0007 BIC 1P0-P2A50-M30MI3-SM4A4A	BIC0008 BIC 2P0-P2A50-M30MI3-SM4A5A	
Function	Power only	Power only	
Transmission distance	0...5 mm	0...5 mm	
Component	Base	Remote	
Connection	Connector, M12x1, 4-pin	Connector, M12x1, 5-pin	
Rated operating voltage Ue	24 VDC	—	
Output voltage	—	24 VDC	
Rated output current	—	500 mA	
Housing material	Brass, coated	Brass, coated	
Dimension	Ø 30 x 100 mm	Ø 30 x 107.5 mm	
Ambient temperature	-5...55 °C	-5...55 °C	
Protection degree	IP67	IP67	
Productview	Page 142	Page 142	

	BIC0075 BIC 1P0-P25A0-Q120AE-SA3A40	BIC0076 BIC 2P0-P25A0-Q120AE-SA3A40	BIC0073 BIC 1P0-P25A0-Q120AE-SA3A50	BIC0074 BIC 2P0-P25A0-Q120AE-SA3A50
	Power only	Power only	Power only	Power only
	0...4 mm	0...4 mm	0...4 mm	0...4 mm
	Base	Remote	Base	Remote
	Connector, 7/8“, 4-pole	Connector, 7/8“, 4-pole	Connector, 7/8“, 5-pole	Connector, 7/8“, 5-pole
	24 VDC	—	24 VDC	—
	—	24 VDC	—	24 VDC
	—	5 A	—	5 A
	Aluminum, black anodized	Aluminum, black anodized	Aluminum, black anodized	Aluminum, black anodized
	120 x 45 x 120 mm	120 x 45 x 120 mm	120 x 45 x 120 mm	120 x 45 x 120 mm
	-10...50 °C	-10...50 °C	-10...50 °C	-10...50 °C
	IP67	IP67	IP67	IP67
	Page 143	Page 143	Page 143	Page 143

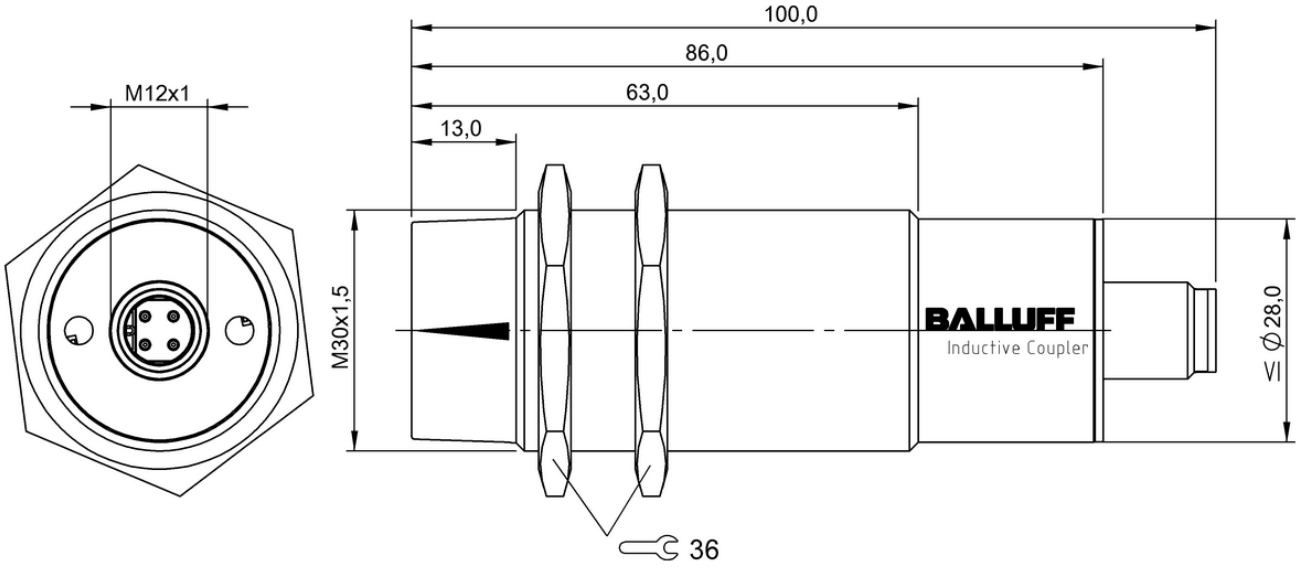

BIC0007

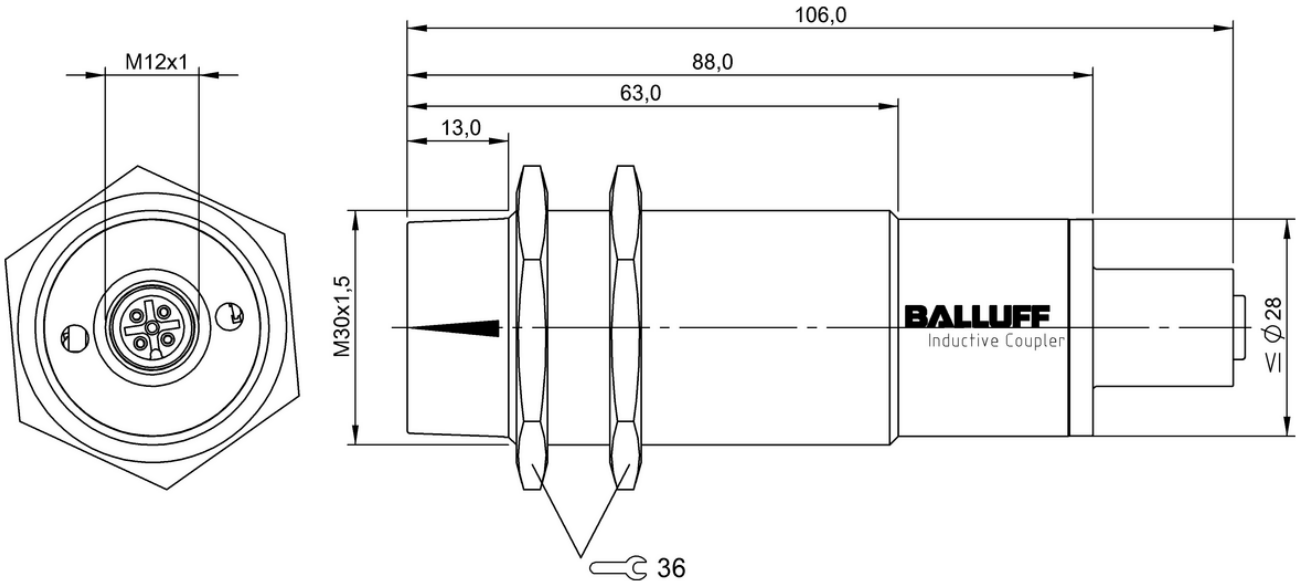

BIC0008

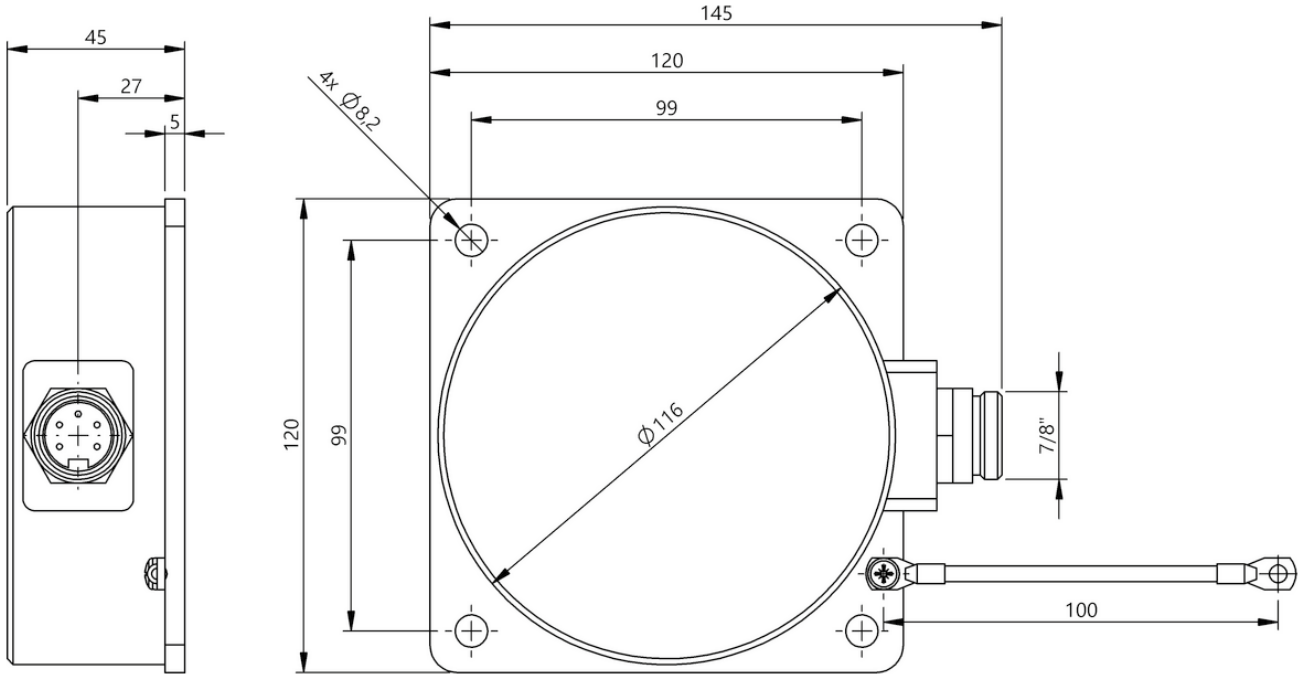

BIC0075, BIC0073

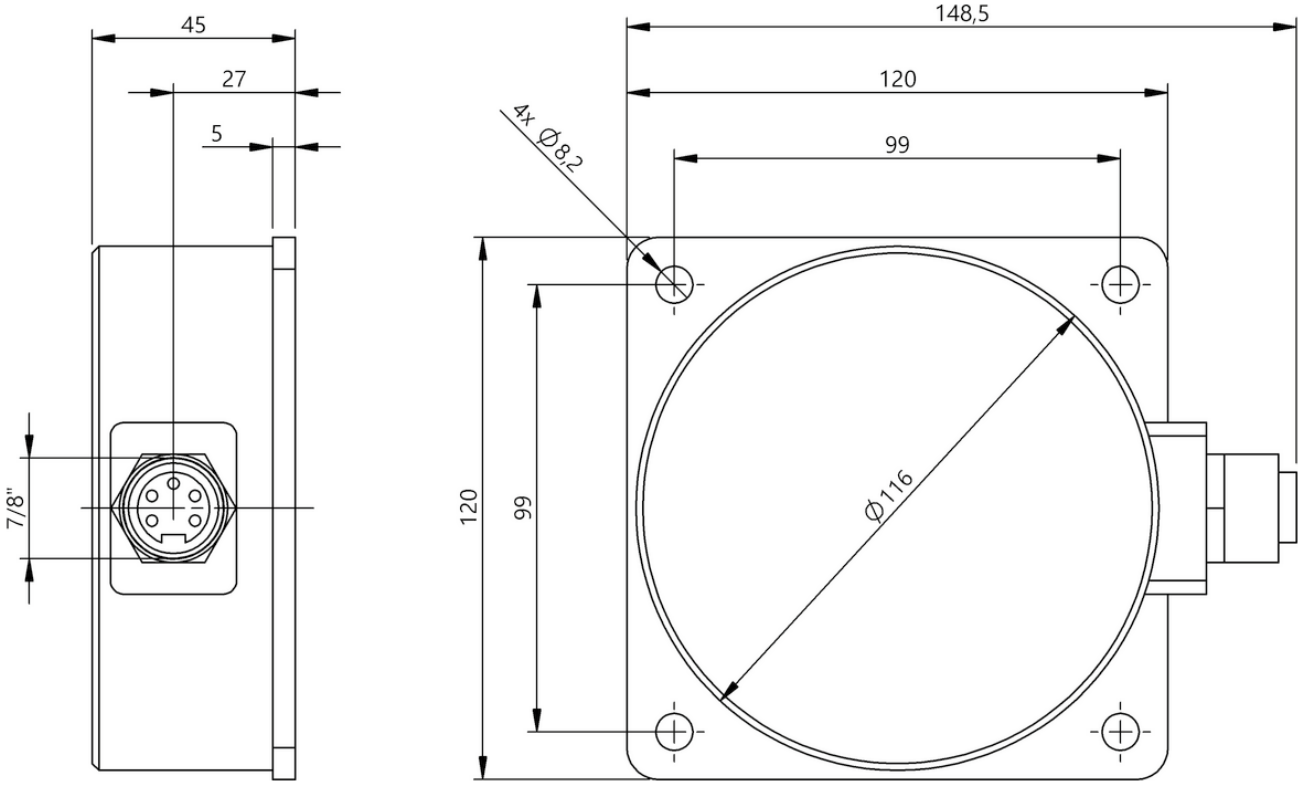

BIC0076, BIC0074

Industrial Networking

BASICS AND GLOSSARY

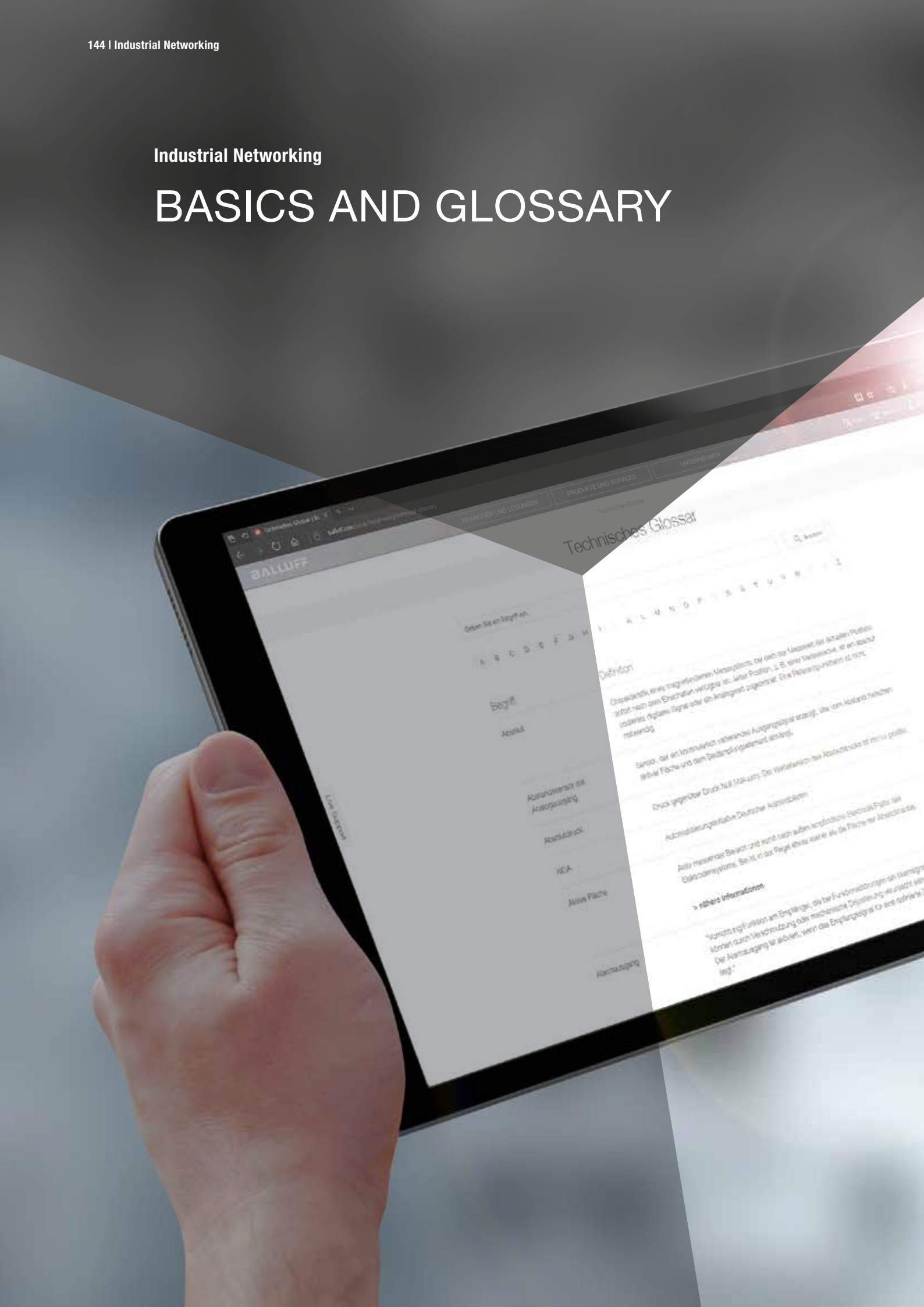

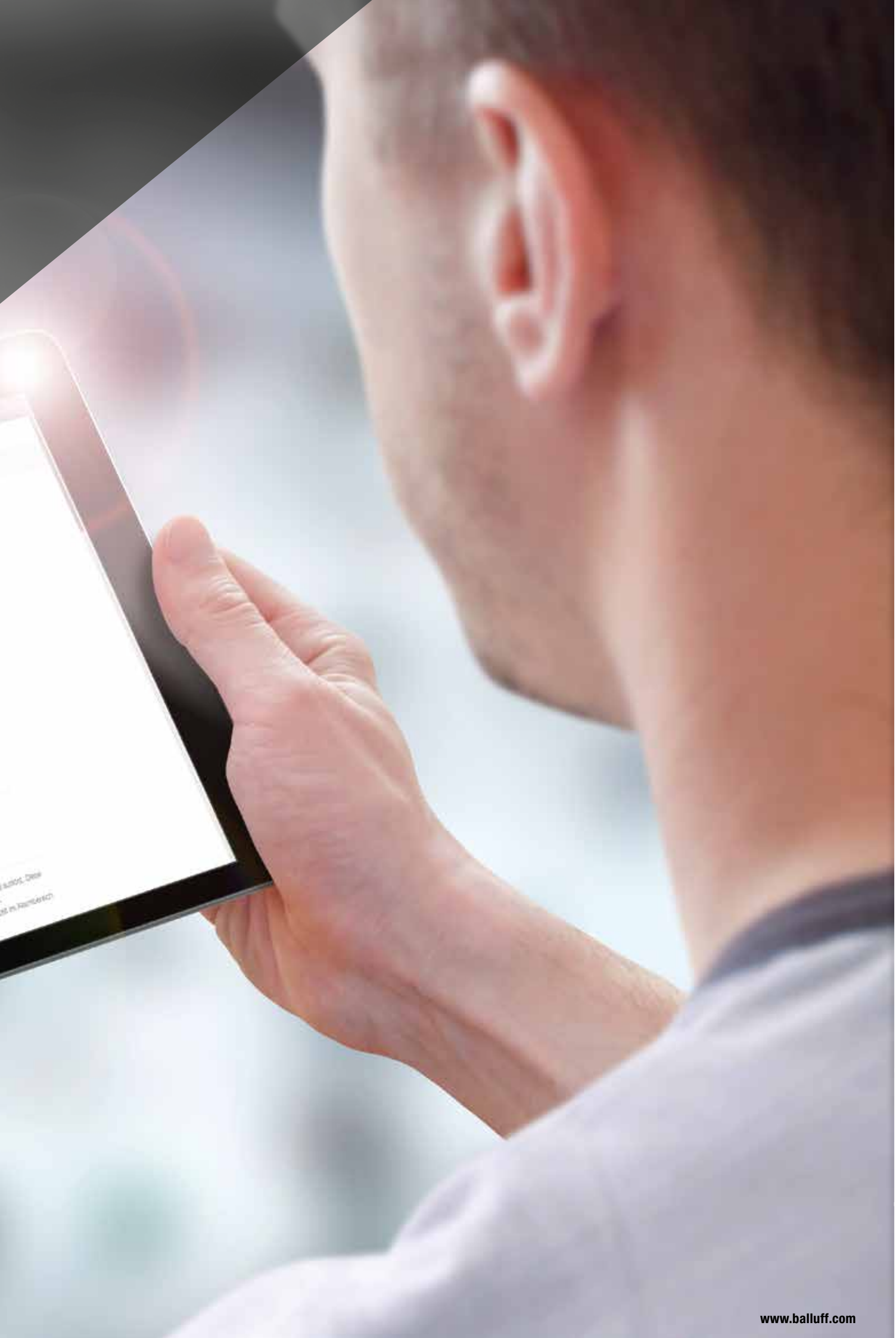

CC-Link

A standardized fieldbus designed to integrate the most diverse automation components of a wide range of providers. The fieldbus offers high transmission speed and deterministic communication. The open network is used mainly in Asia. CC-Link is supported by the worldwide represented CC-Link Partner Association CLPA. More than 1000 companies belong to this association .

CC-Link IE/Field

Gigabit per second transmission and real time protocol which enables controlling of decentralized I/O field devices with virtually no transmission delay. Its transmission rate is at least 10 x faster than the current available industrial Ethernet-based networks. CC-Link IE/Field is the first industrial Gigabit Ethernet network which can be brought down to the field level. A key difference between CC-Link IE/Field and other industrial Ethernet solutions is that the former implements deterministic communication without additional Ethernet switches. This reduces the hardware costs and implementation effort for such components.

Devicenet

An open fieldbus standard developed by Rockwell Automation and the ODVA (Open Devicenet Vendor Association), which is based on the CAN protocol. Devicenet is standardized in EN 50325. Specification and maintaining of the standard is the responsibility of the ODVA.

I/O module

Modules with IO-Link interface which connect the binary and analog sensors and actuators to the control level through a bus. Use of these modules substantially reduces the number of lines needed. They also offer additional functions for signal pre-processing and expanded diagnostics capabilities. Different designs and connection techniques enable solutions for a wide variety of applications, even under the most extreme environmental conditions.

EtherCAT

Open fieldbus system based on Ethernet and which due to its speed enables data transmission in real time. The technology for industrial networks in automation technology was standardized in the international standards IEC 61158 and IEC 61784 as well as in ISO 15745-4.

Ethernet/IP

Industrial Ethernet standard for industrial networks in automation technology, which is used especially in the North American market and in combination with Rockwell controllers. Standardization is through the international series IEC 61158. Based on CIP protocol (Common Industrial Protocol) and is used for transmitting cyclical I/O data as well as acyclic parameter data.

Inductive couplers

Non-contact transmission of data and energy over an air gap which eliminates mechanical wear.
The units are easy to use and require no maintenance.
They can be easily disconnected, so that new situations can be quickly responded to. The disadvantages of fixed wiring such as cable wear and break are eliminated while positive outcomes are gained: Elimination of unplanned machine stoppages, high system availability, shorter cycle times and more flexible sequences.

IO-Link

Worldwide standardized IO technology (IEC 61131-9) for communicating from the controller to the lowest level of automation. The interface can be used universally and is a fieldbus-neutral, point-to-point connection that operates using an unshielded industrial cable. Advantages of this digital communication standard include simple installation, need-based maintenance, efficient operation and the highest machine availability.

IO-Link device manager

Software for configuring IO-Link devices. Direct access to all IO-Link devices in the network via UDP (User Datagram Protocol) enables parallel configuration of different devices in the same network. The multi-window function of the software allows different devices to be configured and diagnosed at the same time. The ability to perform an IO test using software and make parameter settings without the PLC means significantly faster system startup. Along with PLC communication, process-, parameter- and diagnostics data can be transported without affecting the process cycle. This communication takes place continuously with all IO-Link devices in the network. The IO-Link device manager can be used with all Profinet and Ethernet/IP master modules from Balluff.

Memory module

A network technology with built-in data storage. In machines and equipment it can, for example, assume the function of an interchangeable data carrier. It logs and stores many parameters: including the operating data of the tool, the histogram of the temperature level in operation, the required power level up to the number of tool cycles, and the error messages in the tool.
This means operating data as well as supplemental information is always available during maintenance or repair in the factory.

Network module

Interface between fieldbus/industrial Ethernet and the IO-Link communication standard. Ever faster, more efficient and variable production demands seamless communication from the sensor to the Internet. The result is a growing amount of data within the production processes. This demands components which can make this information available. At the same time an infrastructure is required which transports the data across all levels. Network modules are required for these purposes. They usually serve as an interface between fieldbus/industrial Ethernet and the IO-Link communication standard.

Profibus

Universal standard for fieldbus communication in automation technology. This fieldbus is standardized in IEC 61158.
The basis of the protocol architecture is the OSI layer model. Profibus (Process Field Bus) is especially suited for complex applications and is today one of the most used fieldbuses in automation technology.

Profinet

Official industrial Ethernet standard of the Profibus User Organization. Based on TCP/IP, the protocol connects drives and safety technology directly to the network world.
Profinet (Process Field Network) is real time Ethernet capable and ensures significantly faster communication than Profibus. Both standards can be easily combined with each other. Profinet can be integrated consistently from the control level to the drive. Profinet is a communication solution which has been used in many applications for many years worldwide.

Signal converter

A module which stores an incoming signal in a particular format and outputs it in a different format.
Frequently, such modules are used in the conversion of analog signals into digital signals or vice versa. Likewise, you can convert different communication protocols using signal converters.

Switch, managed

Device which receives, processes and passes data packets to other devices in the network. It thereby connects individual network segments to each other. Can be configured so that it is matched to the network requirements (in contrast to an unmanaged switch) and has for example functions which ensure high system availability and high safety requirements.

Switch, unmanaged

Device which receives, processes and passes data packets to other devices in the network. It thereby connects individual network segments to each other. Cannot be configured and is integrated into a network using plug-and-play with no pre-settings.

UL

Independent, globally recognized organization with headquarters in the USA. Tests and certifies products, product groups and materials for safety. UL (Underwriters Laboratories) is not a product approval body, rather it tests whether products meet the specific safety requirements for certain applications. The UL logo, which can be attached on a product which has been certified, is recognized as a quality indicator especially in North America.

**Generate, transport, visualize data –
Create added value**

SOFTWARE AND SYSTEMS SOLUTIONS.

innovating automation

The future of automation is increasingly connected and digital. The growing diversity of technology – including in the private sector – expectations of many users while the demands on industry rise.

Meeting these increasing demands necessitates the merging of traditional automation technology (OT) and information technology (IT). And the increased use of software is the next logical step.

Balluff offers IIoT capable hardware and middleware in combination with powerful software. This means you benefit from system solutions for the widest variety of requirements in your production environment.

Your Balluff solutions

- Configuring Balluff IO-Link devices with the **Balluff Engineering Tool** 152
- Injection molding tool management with **Mold-ID** 154
- Tool parameter transfer with **Easy Tool-ID** 156

Parameterizing, configuring and starting up IO-Link devices – now even easier

BALLUFF ENGINEERING TOOL

When you need a manufacturer-neutral startup and configuration of IO-Link devices, the Balluff Engineering Tool (BET) is the answer.

This software quickly and easily provides you with an overview of your topologies and allows you to track the status of all the connected IO-Link devices. You can also parameterize and place the devices in service while also managing the parameters for individual devices or entire topologies. Functions for documenting the topologies and for testing inputs and outputs are also available within the software along with simple assignment of IP addresses.

The BET is part of the Smart Automation and Monitoring System (SAMS) from Balluff, which includes a variety of devices with a standard operating, configuration and diagnostics concept.

Features

- Simple, faster setup of IO-Link devices – even without a PLC
- Reduced startup time and fewer errors since IO-Link device settings can be saved and reused
- Prevents wiring mistakes and reduces time-consuming troubleshooting by testing the IO-Link wiring before startup
- Overview of the entire IO-Link topology and its status
- Part of the Smart Automation and Monitoring System (SAMS) from Balluff

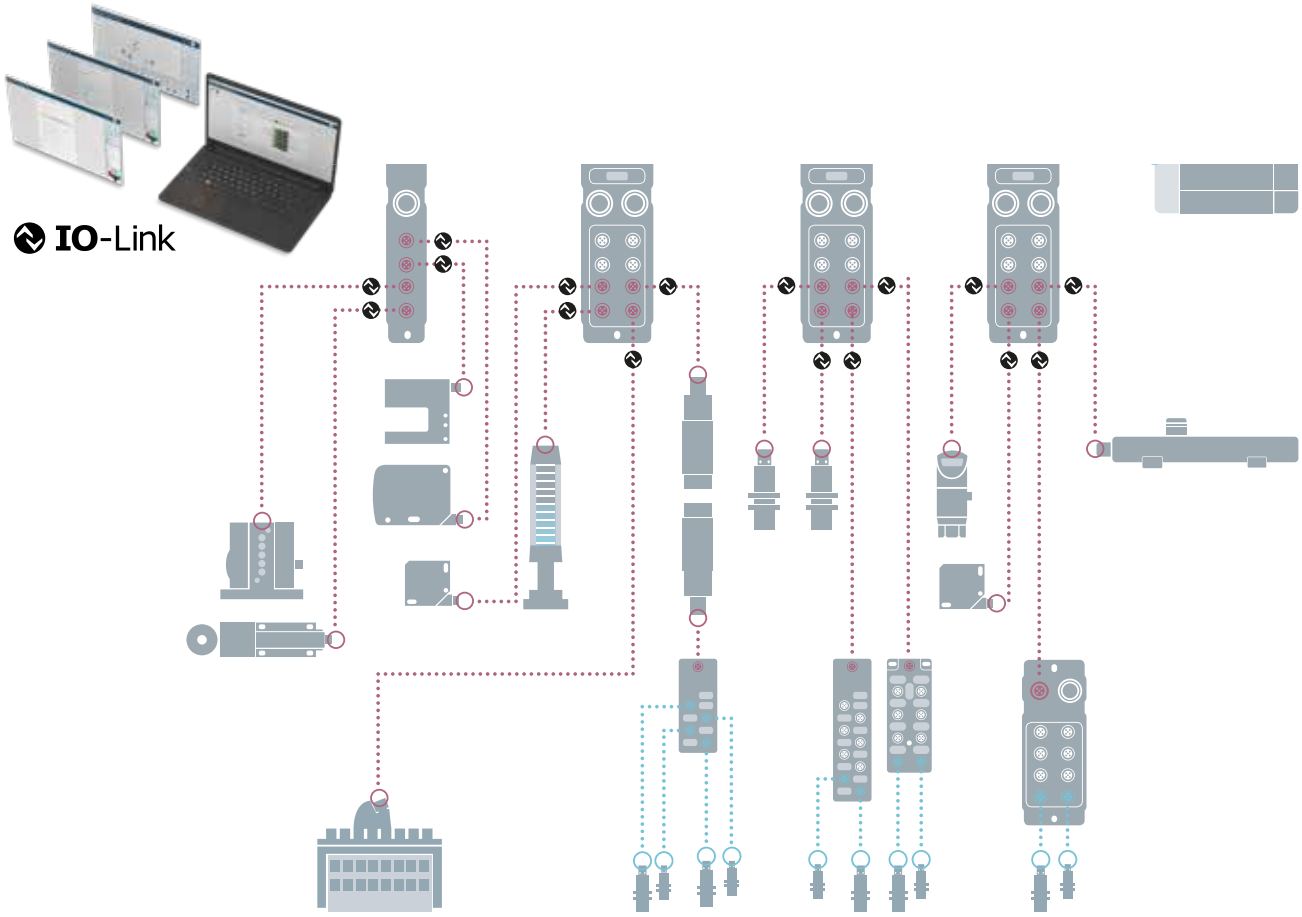

BALLUFF ENGINEERING TOOL (BET)

Standard version	BAI BET-S12N-UDN-0001-_DW-ST_ _
Description	You get the full functional capability of our Balluff Engineering Tool (BET) in the form of a 12-month license. You can configure the scope of the license yourself. One license is needed for each terminal device fully covered by the BET. The software can be used with some function limitations without purchasing a license.

Ordering example: BAI BET-S12N-UDN-0001- _ DW-ST _ _

Payment type
2 Software subscription, monthly payments
3 Software subscription, annual payment

Number of network blocks
OB 2 active distributors
OB 5 active distributors
OB 10 active distributors
OB 20 active distributors
No license is required for using just one network module.

The BET is suitable for all Profinet and Ethernet/IP IO-Link network blocks firmware version 3.2.2 and higher.

ACCESSORIES

	BNI0067	BNI000F	BNI0089	BNI005E
Description	Unmanaged Switches Ethernet TCP/IP 10Base-T/100Base-TX, 8x RJ45 female, 8-pin	Unmanaged Switches Ethernet TCP/IP 10Base-T/100Base-TX, 8x M12x1 female, 4-pin, D-coded	Unmanaged Switches Ethernet TCP/IP 10Base-T/100Base-TX, 8x M12x1 female, 4-pin, D-coded	Unmanaged Switches Ethernet TCP/IP 10Base-T/100Base-TX, 5x RJ45 female, 8-pin

CONNECTORS

2 M CABLE	BCC0JF0	BCC06FN	BCC0E90	BCC06J3
10 M CABLE	BCC0JF3		BCC0E8P	
Connection 1	M12 male, straight, 4-pin, D-coded	7/8" female, straight, 5-pin	M12 male, straight, 4-pin, D-coded	7/8" female, straight, 4-pin
Connection 2	RJ45 male, straight, 4-pin	7/8" male, straight, 5-pin	RJ45 male, straight, 4-pin	7/8" male, straight, 4-pin
Interface	Profinet	Current	Ethernet/IP	Current
Cable	PUR shielded, green, drag-chain compatible	PUR black, drag-chain compatible	TPE shielded, turquoise, drag-chain compatible	PUR black, drag-chain compatible

Other cable versions and lengths on request or at www.balluff.com

Transparency in injection molding tool handling

MOLD-ID

Why Mold-ID?

The autonomous Balluff Mold-ID system guarantees condition-based maintenance of the molds without time-consuming and error-prone mold logs.

All the relevant data, such as shot count, last maintenance and detailed information, is automatically stored on the tool using RFID data carriers and can be recalled at any time using the RFID handheld reader.

This minimizes downtime and supports condition-based maintenance. The optimum capacity utilization of the injection molds is guaranteed.
Mold-ID significantly increases the productivity of the injection molding system.

Good to know: Mold-ID is an autonomous system. This means that you can retrofit all the machines individually regardless of location, manufacturer or age of the machines.

The most important benefits

- Autonomous system, can be retrofitted regardless of manufacturer or machine age
- All data is available directly on the mold via RFID data carriers
- Can be read at any time, even portably using an RFID handheld
- Automatic documentation of the production cycles
- Optimal tool changes, since you are now using condition-based maintenance
- Information about the molds currently used on the machine by accessing the systems via web interface and API

HARDWARE AND COMPONENTS OF THE MOLD-ID SYSTEM

	BNI00CE	BES00EF	BIS018E	BIS0180	BNI0085
Description	Compact field controller with web server as gateway for the company network	Inductive sensor as shot counter	HF read/write head (13.56 MHz) with integrated processor unit	HF data carrier (13.56 MHz) on each mold	Smartlight tower light for visualizing the operating status directly on the machine
Ingress protection	IP67	IP68	IP67	IP67	IP30
Approval, conformity	CE, UL	CE, cULus, EAC, WEEE	CE, FCC Part 15, IC RSS-210, EAC, WEEE	CE, WEEE, EAC	
Dimensions	68 × 42.9 × 226 mm	Ø 12 x 45 mm	28 x 60 x 33.4 mm	40 x 23 x 28 mm	60 x 60 x 330.5 mm
Ambient temperature	–5...+50 °C	-25...70 °C	0...70 °C	-25...70 °C	-5...50 °C
Housing material	PPS	Brass, nickel-free coated	Die-cast Brass nickel plated, nuts nickel plated brass	PA 12 Aluminum * die-cast	PC, transparent, Cu 15 µm, Ni 15 µm Die-cast zinc

Additional information about the products can be found in the Product Finder on our website:
www.balluff.com/local/de/productfinder/#/

Do you have more than one injection molding machine running?

The Connected Mold-ID software extension offers the ability to create transparency across all the machines in the system.

Connected Mold-ID software overview:

Connected Mold-ID is a software package for networking all the Mold-ID systems. This allows all the data recorded by Mold-ID to be also recorded in a central database.

- Networks multiple units
- Records the injection molding tool data in a central database
- Displays the tool inventory, tool details and histories as well as the status of the production cell (machine and tool) in a browser application
- Access to the Connected Mold ID system using a standard web browser
- Optimal tool changes by visualizing inspection intervals on the equipment and in the software
- Overview of the entire tool inventory, tool details and machine inventory
- Recording of tool history

CONNECTED
MOLD-ID
SOFTWARE

	BAI CMI-S12C-UDN-9999-_DZ-ZZ_ _
Description	The Connected Mold-ID software can be obtained in the form of a time-limited license for 12 months. The conditions are determined by the following configuration options themselves: ■ Number of molds to be monitored (number of devices/molds/objects) ■ Payment type: monthly or annual

Ordering example: BAI CMI-S12C-UDN-9999- _ DZ-ZZ _ _

Payment type
2 Software subscription, monthly payments
3 Software subscription, annual payment

Number of molds
OD up to 10 molds
OG up to 100 molds
OH up to 250 molds
OI up to 500 molds
OJ up to 1000 molds
OK more than 1000 molds

The user license is provided via email in the form of a license key.
This allows you to activate and use Connected Mold-ID.
The product itself is provided in an installation file in the download area of the product detail page on our website.
Connected Mold-ID must be installed on a central server which has a connection to the individual Mold-ID units. Our customer project unit will be happy to assist you in layout and startup.

Testing Connected Mold-ID

You can test Connected Mold-ID yourself. Use the Demo Tool on the product page:
www.balluff.com/local/de/productfinder/#/ca/A0018/cg/G1801/product/F180102/variant/MP10062274

Reliably record and share tool characteristics in machining processes using RFID

EASY TOOL-ID

Easy Tool-ID supports machine operators in getting their tool data to the machine tool fast and reliably. Our system drastically reduces setup times and incorrect entries. The 7" display shows all the relevant tool data, so that all the information you need is visible whenever needed. In addition, you can manually update your tool data from the touch display. This allows tool wear to be consistently documented. Optimal tool utilization is then a given. No cumbersome, expensive integration into the PLC is required. You can simply connect Easy Tool-ID to the machine tool via USB.

The most important benefits

- Reduced setup times and erroneous entries: send tool data fast and reliably via USB
- All the data is shown in plain text on the touch display
- Optimal tool utilization: manual updating of tool data via the touch display
- Effortless retrofitting: simple configuration via web browser, no intervention in the machine tool itself and only very short downtimes

CONTROLLER
EASY TOOL-ID

	BSG001W
Module	phyCore i.MX6 Dual Lite
Memory	4 GB eMMC
Working memory	1 GB RAM
Clock frequency	2 × 1.2 GHz
M12 connections	1 × Power (24 V DC), 2 × Ethernet, 1 × USB Host, 1 × USB Client, 1 × RS232, 1 × USB Host
Display	7" TFT, WVGA 800 × 480, LED Back-Light, Analog RGB (TTL), Projective Capacitive Touch (Multi-Touch)
Power Supply	24 V DC ±10% LPS Class 2
Current	≤ 2 A
Operating temperature	0...+60 °C
Storage temperature	–40...+80 °C
Enclosure rating per IEC 60529	IP54
Max. USB cable length	2.8 m

TOOL STAND FOR TOOL IDENTIFICATION WITH RFID TECHNOLOGY

	BSG001T
Dimension	250 x 1046.5 x 150 mm
Terminals	PWR: 7/8" male, 5-pin
Terminals	PWR: 7/8“ male, 5-pin X1 (Ethernet TCP/IP): M12x1 female, 4-pin, D-coded
Operating voltage Ub	24 V DC LPS Class 2
Current draw max.	8 A
Ingress protection	IP65
Ambient temperature	0...60 °C
Approval/Conformity	CE, WEEE
Max. USB cable length	2,8 m

ACCESSORIES

	BSG001E	BSG0018	BSG001J	BAE00ER
Description	Tool holder for HSK63	Tool holder for SK50	Tool holder for Capto CC6	Power supply

Other tool holders available on request.

CONNECTORS

	BCC0AA7	BCC0AJ0	BCC0CNY	BCC0CP0	BCC0FMK	BCC0JF0
Description	Tee, 7/8“ - female, 5-pin, IP67	Connection cable, 7/8" female, straight, 3-pin, 5 m PUR cable, 3 × 1.5 mm², IP68	Connection cable, 7/8“ female and straight male, 5-pin, , 3 m PUR cable, IP68	Connection cable, 7/8“ female and male right angle, 5-pin, 3 m PUR cable, IP68	Connection cable Device Net, M12 female, 7/8" male, straight, 5-pin, 3 m, PVC cable, IP68	Connection cable Profinet, M12 male, RJ45 male, 4-pin, 2 m, PUR cable, IP67

Wide range of voltages and power levels

POWER SUPPLIES.

innovating automation

With our power supplies you can power any of your applications. Whether single-phase, three-phase, for parallel or series wiring, whether for the control cabinet, in compact form for automated machines or for harsh conditions directly in the field. At Balluff you will find a wide selection of voltages and power levels for reliable and efficient power supply. Our devices are approved according to CE/TÜV, UL or CCC.

Your Balluff solutions

- Switching Power Supplies

Reliable and efficient power supply

SWITCHING POWER SUPPLIES

Balluff offers high-performance power supplies to ensure that your systems run efficiently and without interference. Our power supplies for the control cabinet withstand overload and have especially long service life: up to 800,000 hours (91 years) to ensure the availability of your machines and equipment.

Our power supplies with the Heartbeat® function provide continuous function information about the internal device condition and indicate the current load situation and demand on the internal components. And the Lifetime display gives you warning for preventive maintenance. The diagnostics function can be applied anywhere in the system via IO-Link.

All the devices are available in several versions and output voltages. Heartbeat® versions for use directly in harsh environments are also available in IP67.

The most important benefits

- Complete line – everything from a single source
- Safety in case of short circuits and overloads in industrial environments
- Long service life for reliable operation
- High system availability of all equipment
- Comprehensive approval packages for global use

Heartbeat® Power Supply Units	162
Heartbeat® Power Supplies with IO-Link Interface	166
Power Supplies for the Control Cabinet	172
Basics and Glossary	178

	BAE00EP BAE PS-XA-1W-24-038-602	
Dimension	85.4 x 57 x 139 mm	
Version	IP67	
Mounting	Flange mounting	
Housing material	Aluminum	
Connection (supply voltage IN)	7/8“-Male	
Connection (supply voltage OUT)	7/8“-Female	
Input voltage	100…240 V AC, Single phase	
Rated output voltage DC	24 V	
Rated output current	3.8 A	
Output capacity max.	91.2 W	
Output current max.	6 A for max. 4s	
Protection degree	IP67 with connector	
Approval/Conformity	CE, cURus	
Ambient temperature	-25...70 °C	
Productview	Page 164	

	BAE00FW BAE PS-XA-1W-24-038-607	BAE00FL BAE PS-XA-1W-24-080-605	BAE00FY BAE PS-XA-1W-24-080-606
	85.4 x 57 x 139 mm	116 x 70 x 150 mm	116 x 70 x 150 mm
	IP67	IP67	IP67
	Flange mounting	Flange mounting	Flange mounting
	Aluminum	Aluminum	Aluminum
	7/8“-Male	7/8“-Male	7/8“-Male
	7/8“-Female	7/8“-Female	7/8“-Female
	100…240 V AC, Single phase	100…240 V AC, Single phase	100…240 V AC, Single phase
	24 V	24 V	24 V
	3.8 A	8 A	8 A
	91.2 W	192 W	192 W
	6 A for max. 4s	12 A for max. 4s	12 A for max. 4s
	IP67 with connector	IP67 with connector	IP67 with connector
	CE, cURus	CE, cURus	CE, cURus
	-25...70 °C	-25...70 °C	-25...70 °C
	Page 164	Page 165	Page 165

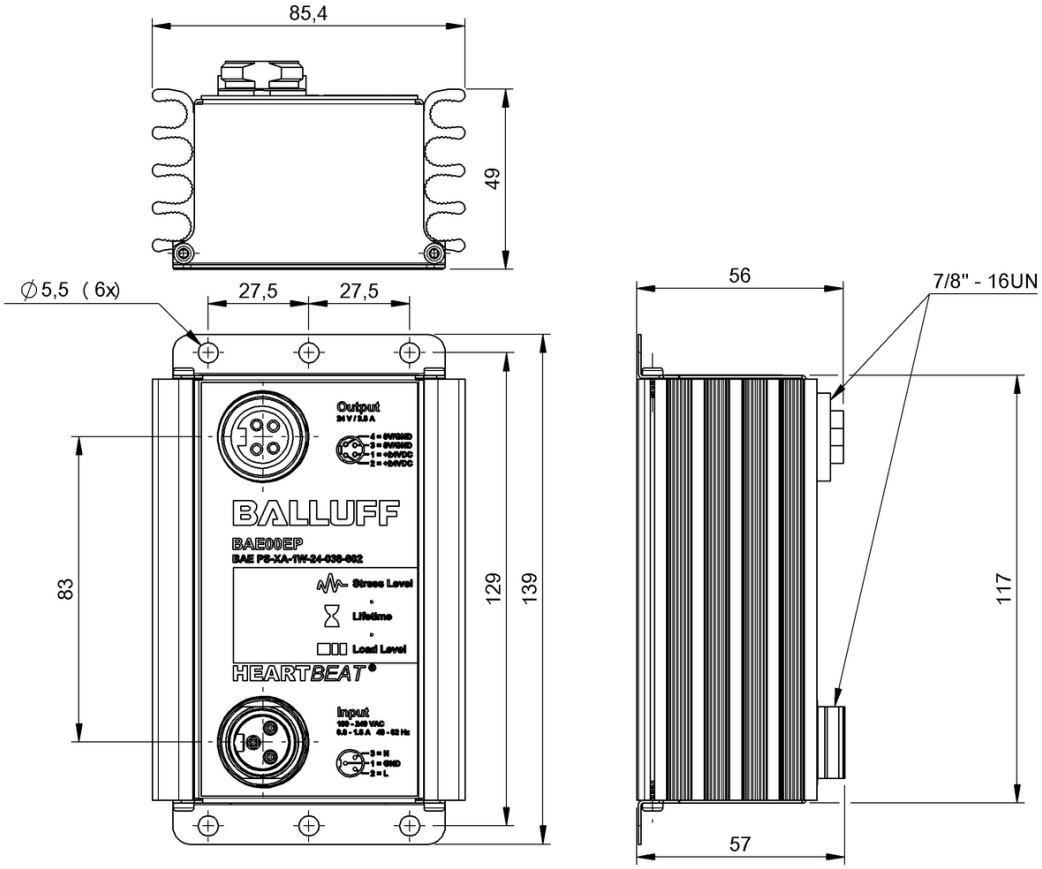

BAE00EP

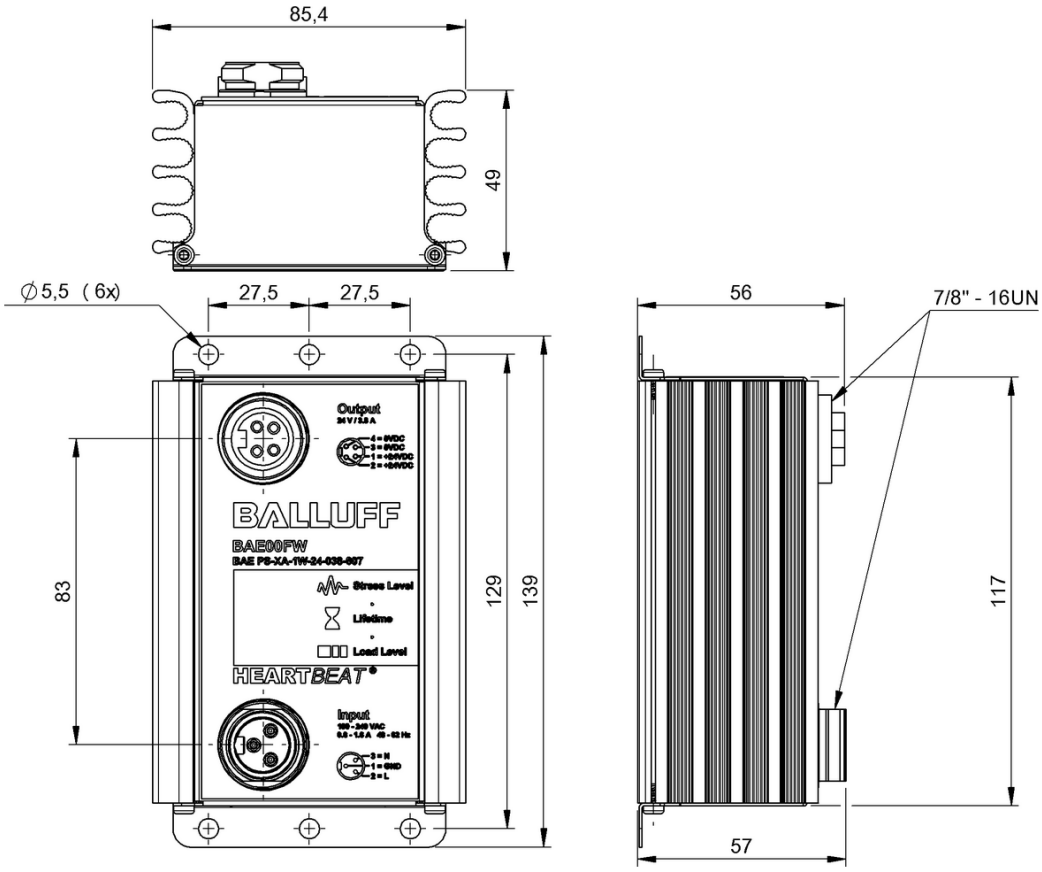

BAE00FW

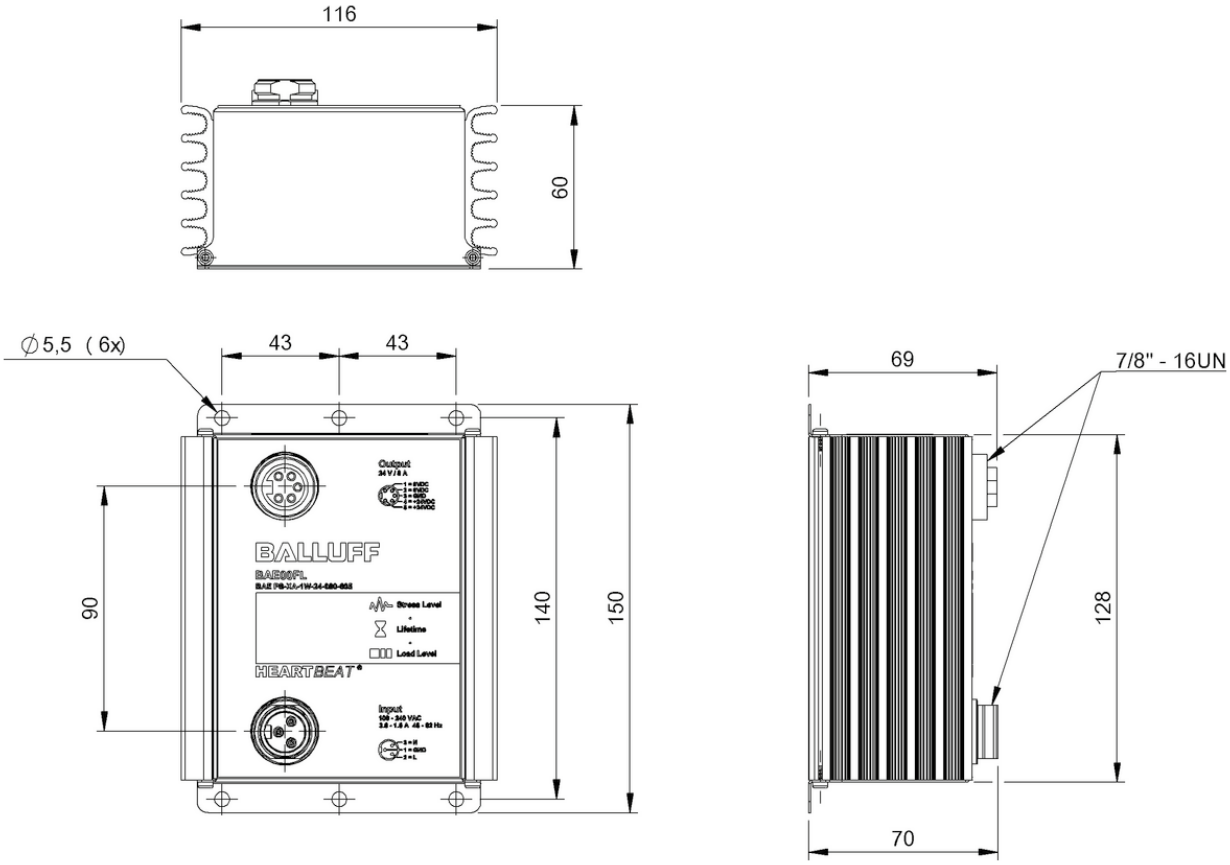

BAE00FL

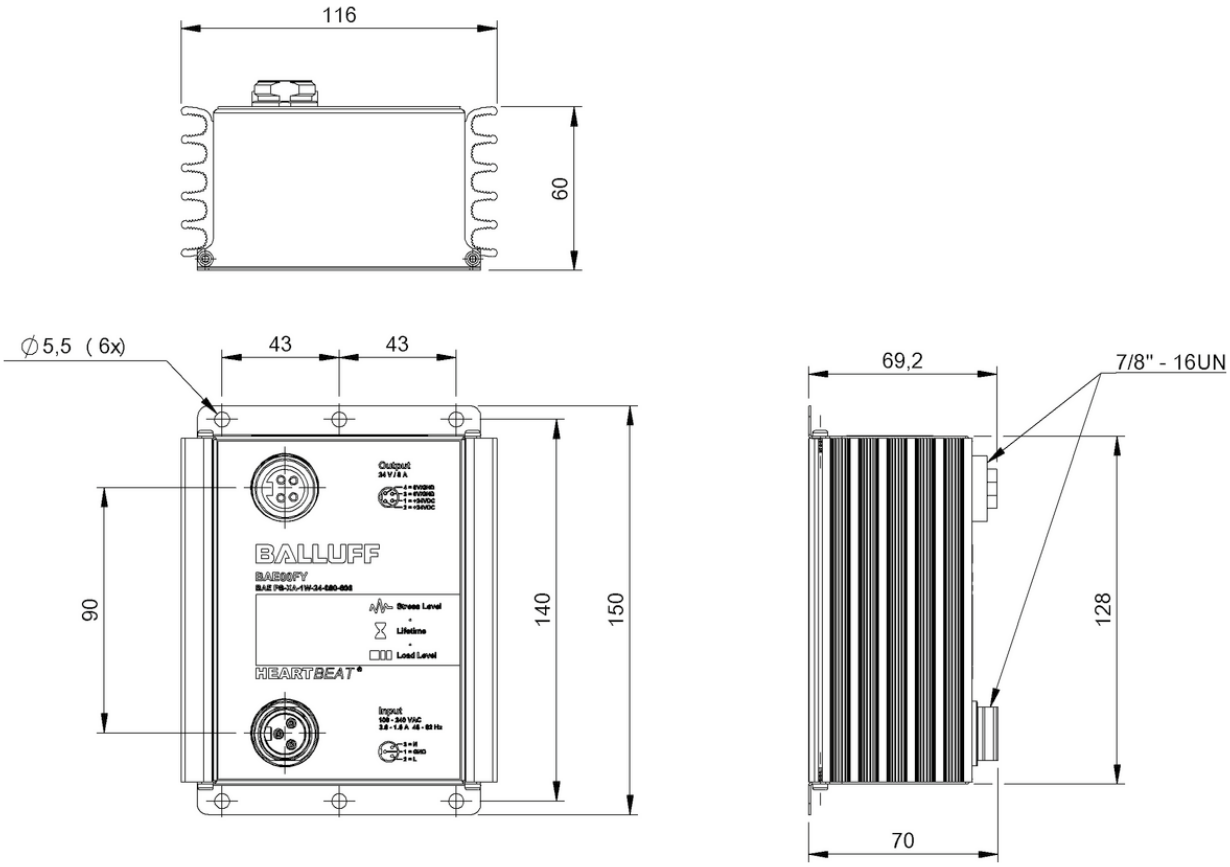

BAE00FY

	BAE00T4 BAE PS-XA-1S-24-050-102	BAE00LJ BAE PS-XA-1S-24-100-103	BAE00M3 BAE PS-XA-1S-24-200-104
Dimension	38 x 127 x 120 mm	60 x 127 x 127 mm	79 x 127 x 139 mm
Version	DIN rail	DIN rail	DIN rail
Mounting	DIN rail mount	DIN rail mount	DIN rail mount
Housing material	Aluminum	Aluminum	Aluminum
Connection (supply voltage IN)	Terminal strip	Terminal strip	Terminal strip
Connection (supply voltage OUT)	Terminal strip	Terminal strip	Terminal strip
Input voltage	115/230 V AC automatic selection, Single phase	115/230 V AC automatic selection, Single phase	115/230 V AC automatic selection, Single phase
Rated output voltage DC	24 V	24 V	24 V
Rated output current	5 A	10 A	20 A
Output capacity max.	180 W	360 W	720 W
Output current max.	7.5 A for max. 4s 1x/min.	15 A for max. 4s 1x/min.	30 A for max. 4s 1x/min.
Protection degree	IP20	IP20	IP20
Approval/Conformity	CE, CB, cURus, cULus	CE, CB, cURus, cULus	CE
Ambient temperature	-25...70 °C	-25...70 °C	-25...60 °C
Productview	Page 168	Page 168	Page 169

	BAE00TR BAE PS-XA-1W-24-025-101	**BAE00TJ** BAE PS-XA-1W-24-038-602-I	**BAE00TK** BAE PS-XA-1W-24-038-603-I	**BAE00TL** BAE PS-XA-1W-24-080-604-I	**BAE00TM** BAE PS-XA-1W-24-080-605-I
	24 x 127 x 92 mm	85.4 x 72.6 x 139 mm	85.4 x 72.6 x 139 mm	116 x 85 x 150 mm	116 x 85 x 150 mm
	DIN rail	IP67	IP67	IP67	IP67
	DIN rail mount	Flange mounting	Flange mounting	Flange mounting	Flange mounting
	Aluminum	Aluminum PC	Aluminum PC	Aluminum PC	Aluminum PC
	Terminal strip	7/8“-Male	7/8“-Male	7/8“-Male	7/8“-Male
	Terminal strip	7/8“-Female	7/8“-Female	7/8“-Female	7/8“-Female
	100…240 V AC, Single phase	100…240 V AC, Single phase	100…240 V AC, Single phase	100…240 V AC, Single phase	100…240 V AC, Single phase
	24 V	24 V	24 V	24 V	24 V
	2.5 A	3.8 A	3.8 A	8 A	8 A
	90 W	91.2 W	91.2 W	192 W	192 W
	3.75 A for max. 4s 1x/min.	6 A for max. 4s	6 A for max. 4s	12 A for max. 4s	12 A for max. 4s
	IP20	IP67 with connector	IP67 with connector	IP67 with connector	IP67 with connector
	CE, CB, cURus, cULus	CE, cURus, IO-Link	CE, cURus, IO-Link	CE, cURus, IO-Link	CE, cURus, IO-Link
	-25...70 °C	-25...70 °C	-25...70 °C	-25...70 °C	-25...70 °C
	Page 169	Page 170	Page 170	Page 171	Page 171

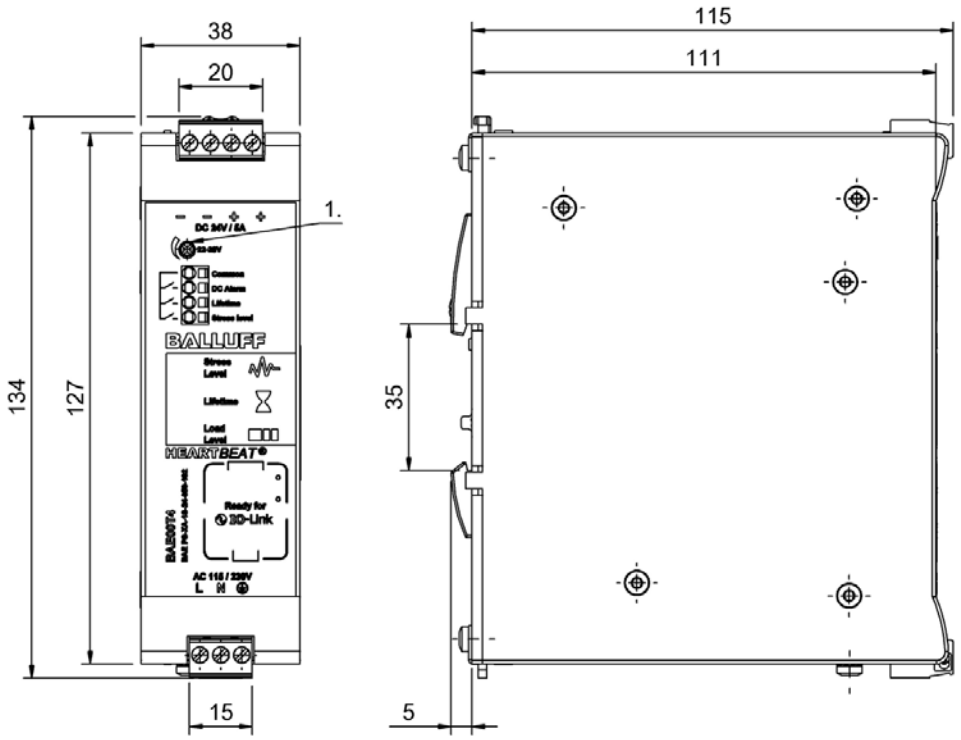

1) Potentiometer

BAE00T4

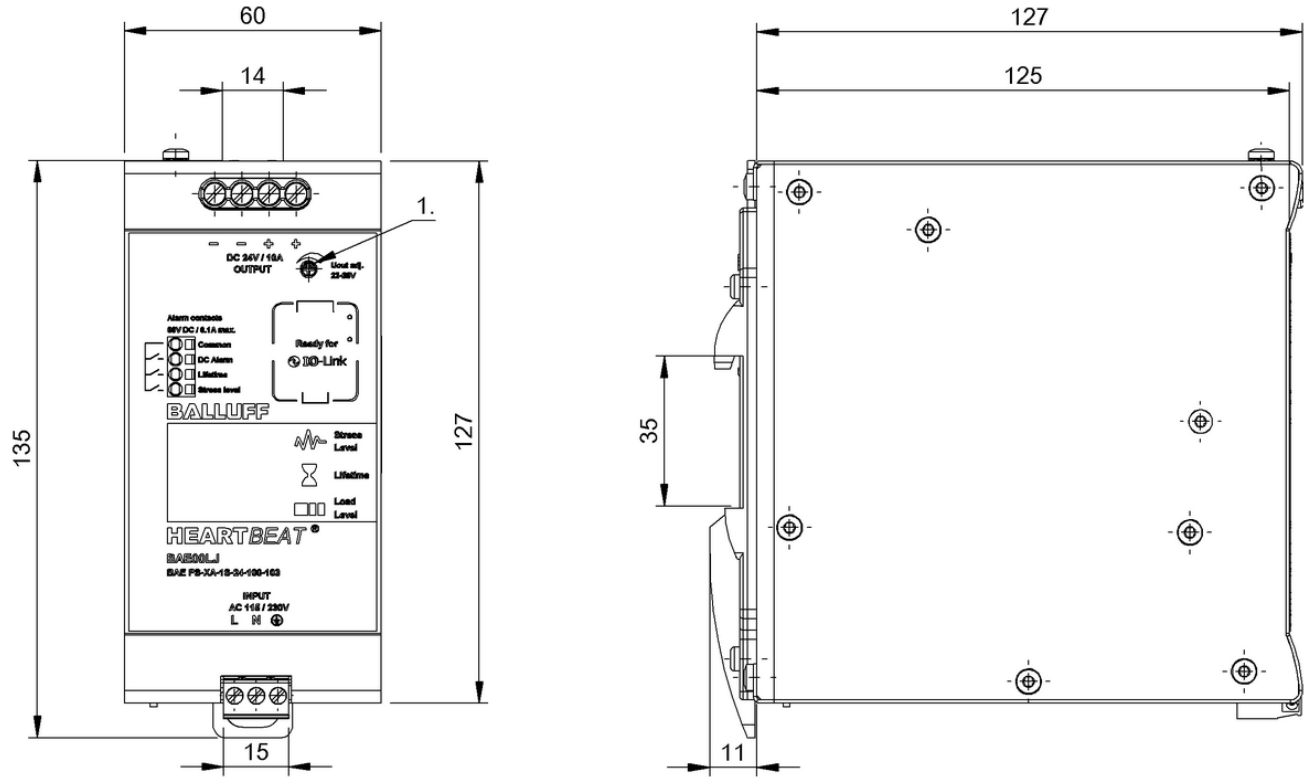

1) Potentiometer

BAE00LJ

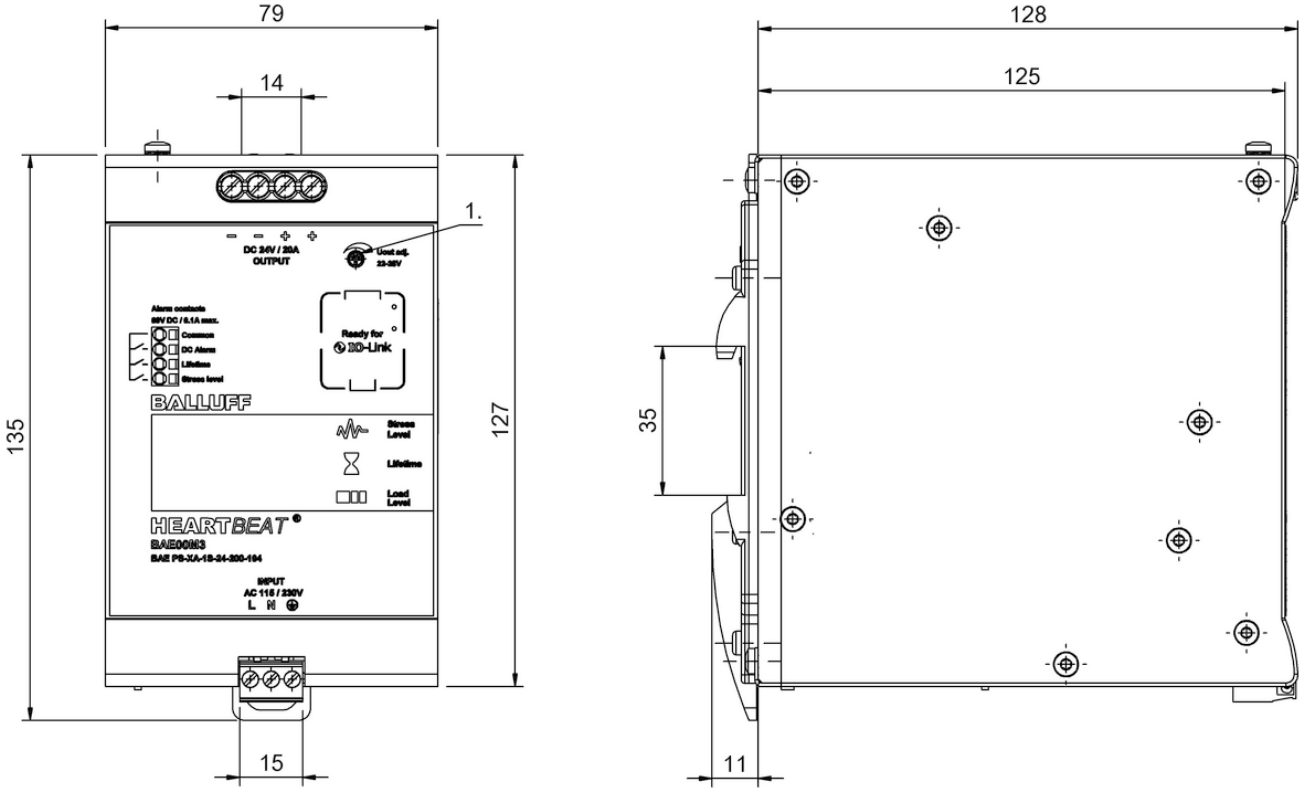

1) Potentiometer

BAE00M3

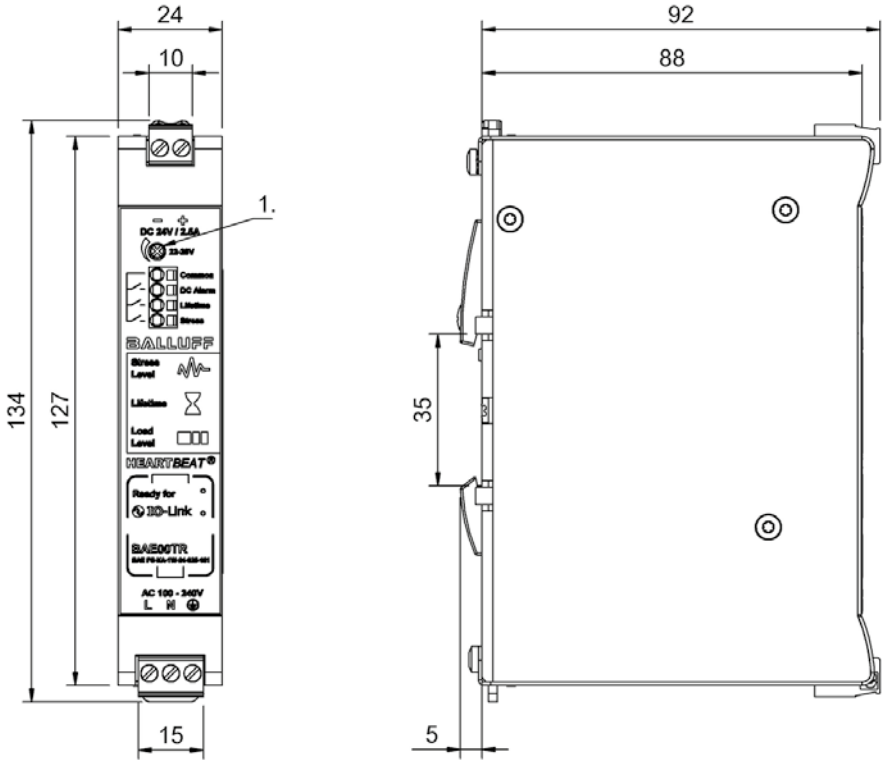

1) Potentiometer

BAE00TR

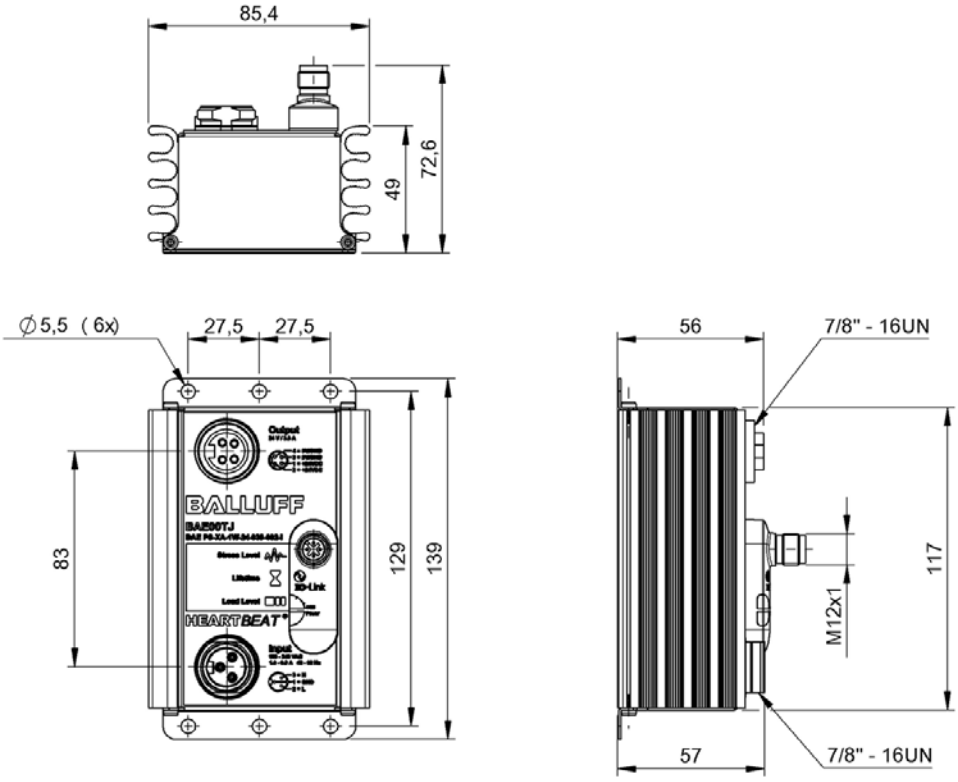

BAE00TJ

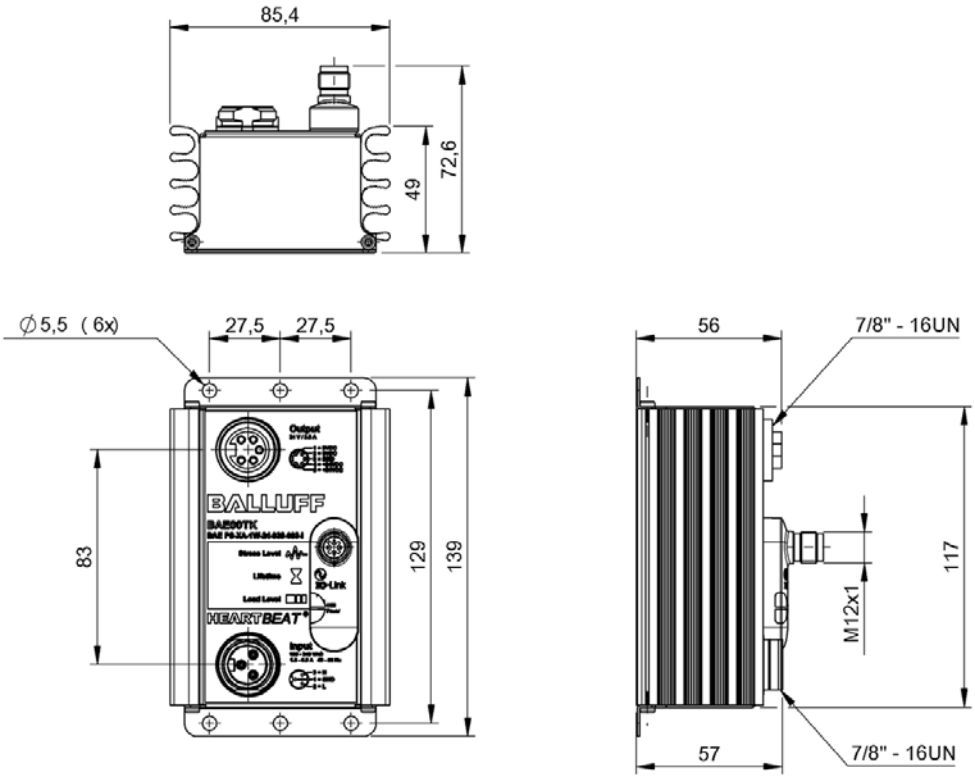

BAE00TK

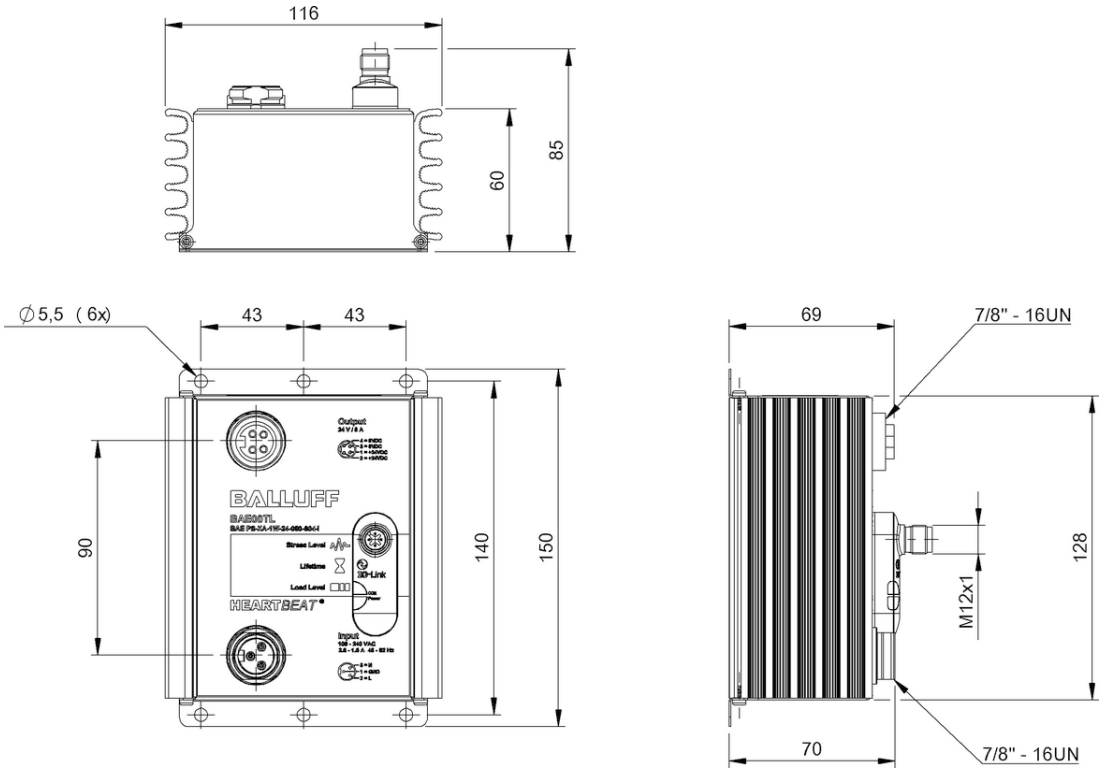

BAE00TL

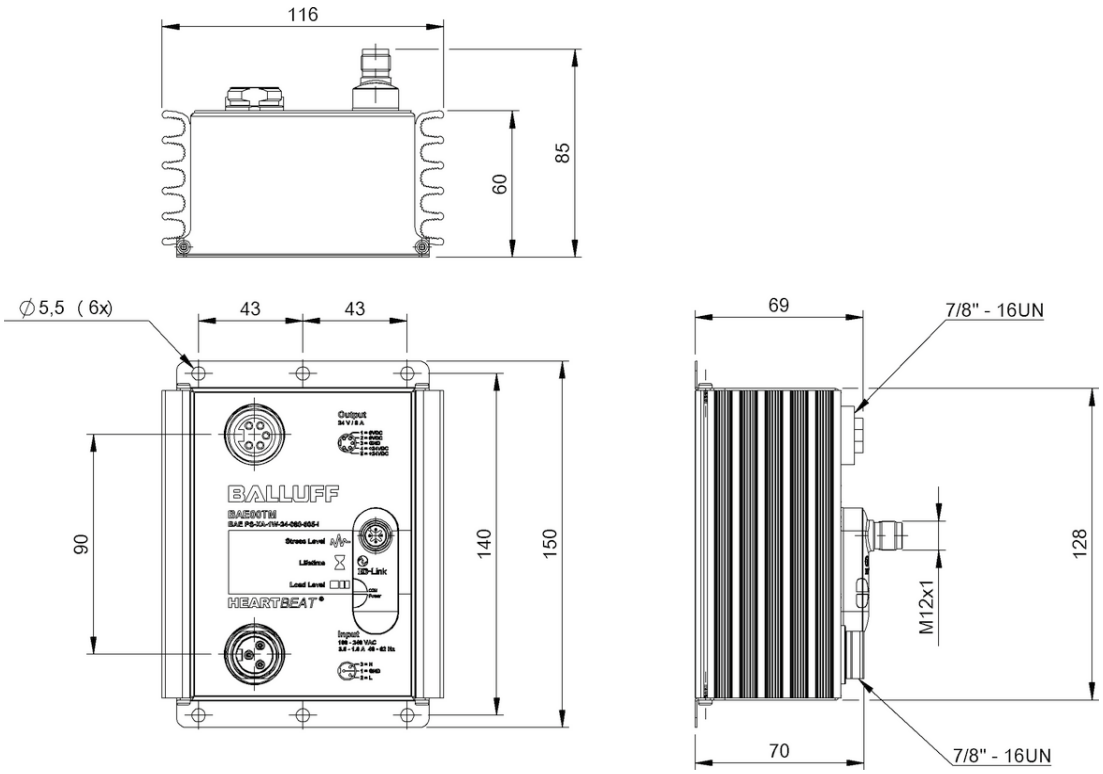

BAE00TM

	BAE0111 BAE PS-XA-1W-24-025-016	**BAE0112** BAE PS-XA-1W-24-050-017	**BAE0113** BAE PS-XA-1W-24-100-018
Dimension	27 x 123.6 x 102 mm	40 x 123.6 x 117.6 mm	60 x 123.6 x 117.6 mm
Version	DIN rail	DIN rail	DIN rail
Mounting	DIN rail mount	DIN rail mount	DIN rail mount
Housing material	Plastic	Metal	Metal
Connection	Terminal, 0.25...2.5 mm²	Terminal, 0.25...4 mm²	Terminal, 0.25...4 mm²
Input voltage	100…240 V AC, 1-phase	100…240 V AC, 1-phase	100…240 V AC, 1-phase
Rated output voltage DC	24 V	24 V	24 V
Rated output current	3.12 A	5 A	10 A
IP rating	IP20	IP20	IP20
Approval/Conformity	CE, EAC, cURus, cULus, WEEE	CE, EAC, cURus, cULus, WEEE	CE, EAC, cURus, cULus, WEEE
Ambient temperature	-20...70 °C	-20...70 °C	-20...70 °C
Productview	Page 174	Page 174	Page 175

	BAE0114 BAE PS-XA-1W-24-200-019	BAE0115 BAE PS-XA-3Y-24-050-020	BAE0116 BAE PS-XA-3Y-24-100-021	BAE0117 BAE PS-XA-3Y-24-200-022	BAE0118 BAE PS-XA-3Y-24-400-023
	85.5 x 123.6 x 128.5 mm	50 x 121 x 117.3 mm	70 x 121 x 117.3 mm	140 x 121 x 117.3 mm	255 x 121 x 117.3 mm
	DIN rail	DIN rail	DIN rail	DIN rail	DIN rail
	DIN rail mount	DIN rail mount	DIN rail mount	DIN rail mount	DIN rail mount
	Metal	Metal	Metal	Metal	Metal
	Terminal, 0.25...4 mm²	Terminal, 0.25 mm²...4 mm², 0.5 mm²...10 mm²	Terminal, 0.25...4 mm²	Terminal, 0.25...4 mm²	Terminal, 0.25 mm²...4 mm², 0.5 mm²...10 mm²
	100…240 V AC, 1-phase	400…500 V AC 3-phase	400…500 V AC 3-phase	400…500 V AC 3-phase	400…500 V AC 3-phase
	24 V	24 V	24 V	24 V	24 V
	20 A	5 A	10 A	20 A	40 A
	IP20	IP20	IP20	IP20	IP20
	CE, EAC, cURus, cULus, WEEE	CE, EAC, cURus, cULus, WEEE	CE, EAC, cURus, cULus, WEEE	CE, EAC, cURus, cULus, WEEE	CE, EAC, cURus, cULus, WEEE
	-20...70 °C	-25...80 °C	-25...80 °C	-25...80 °C	-25...80 °C
	Page 175	Page 176	Page 176	Page 177	Page 177

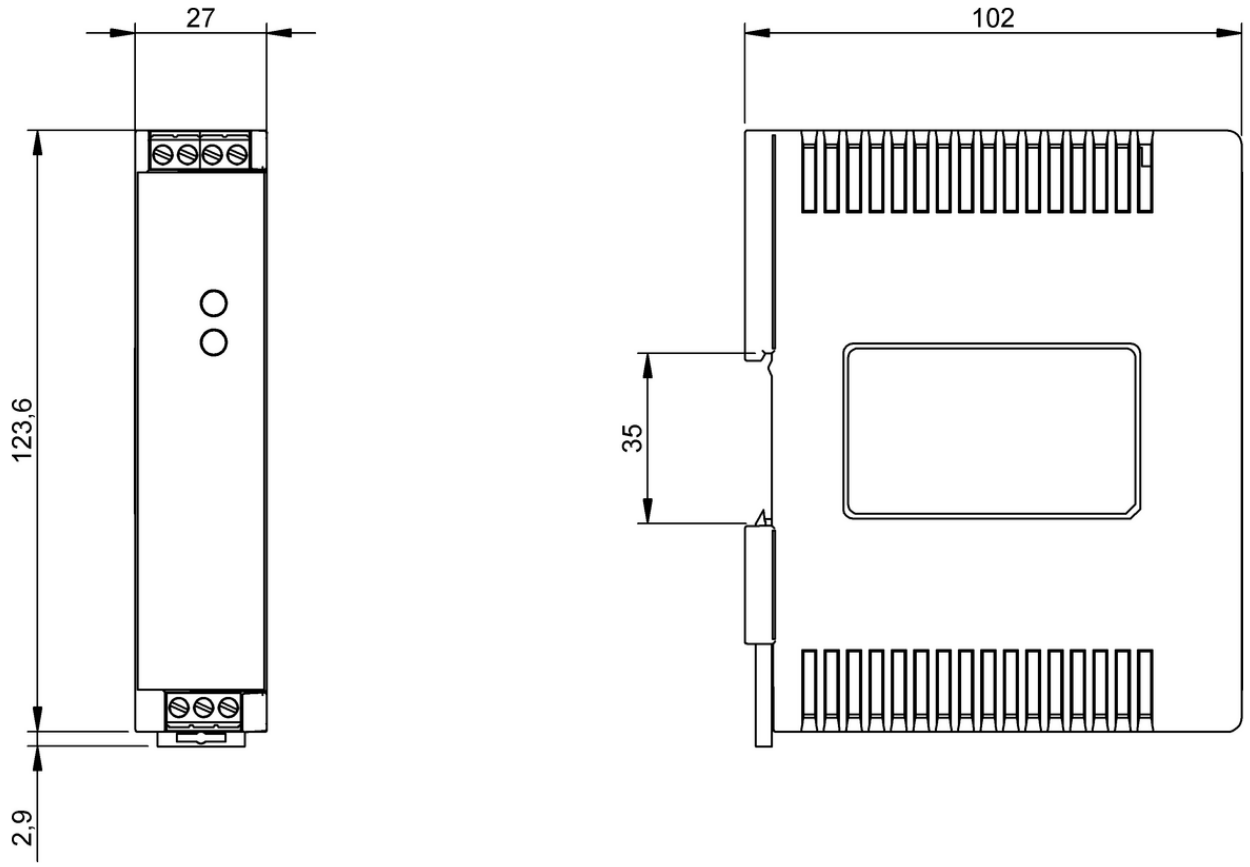

BAE0111

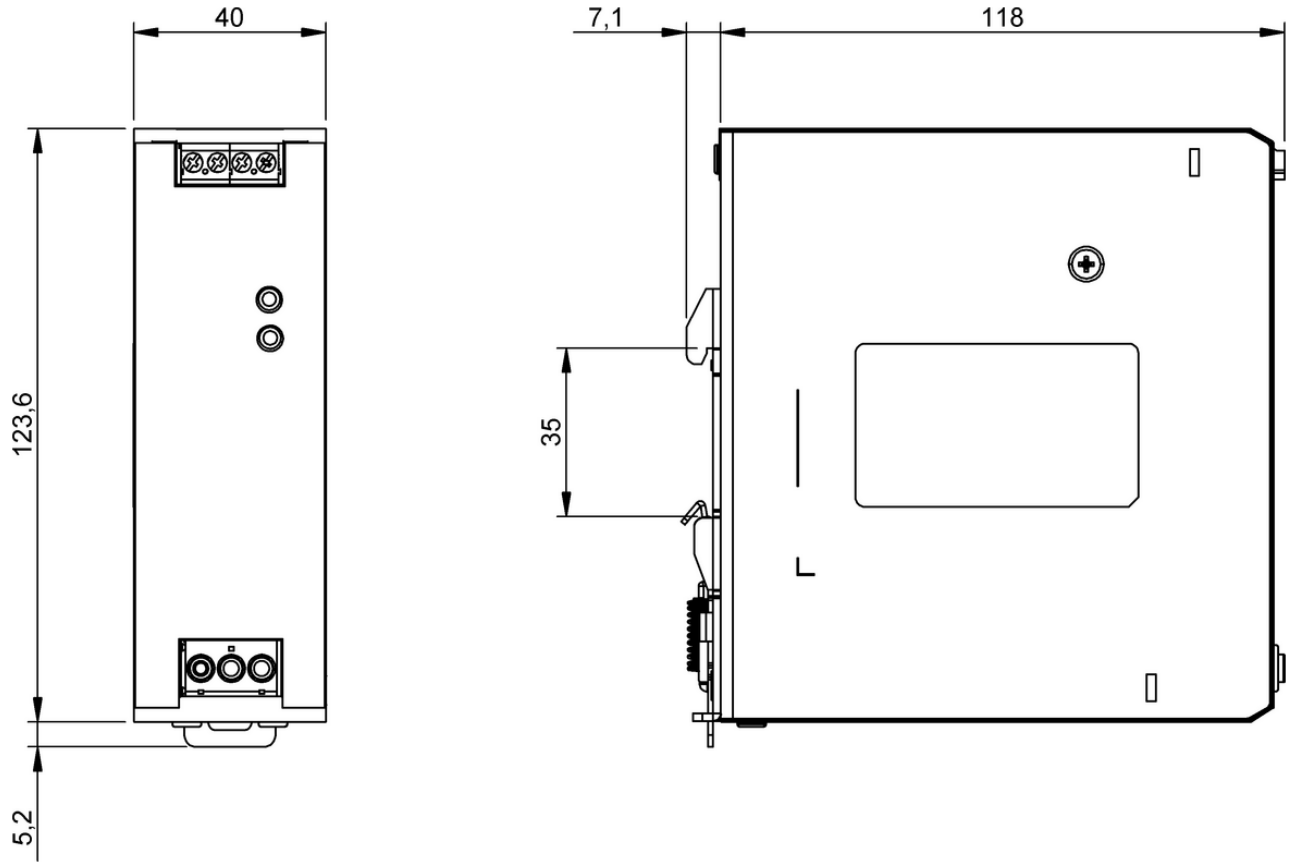

BAE0112

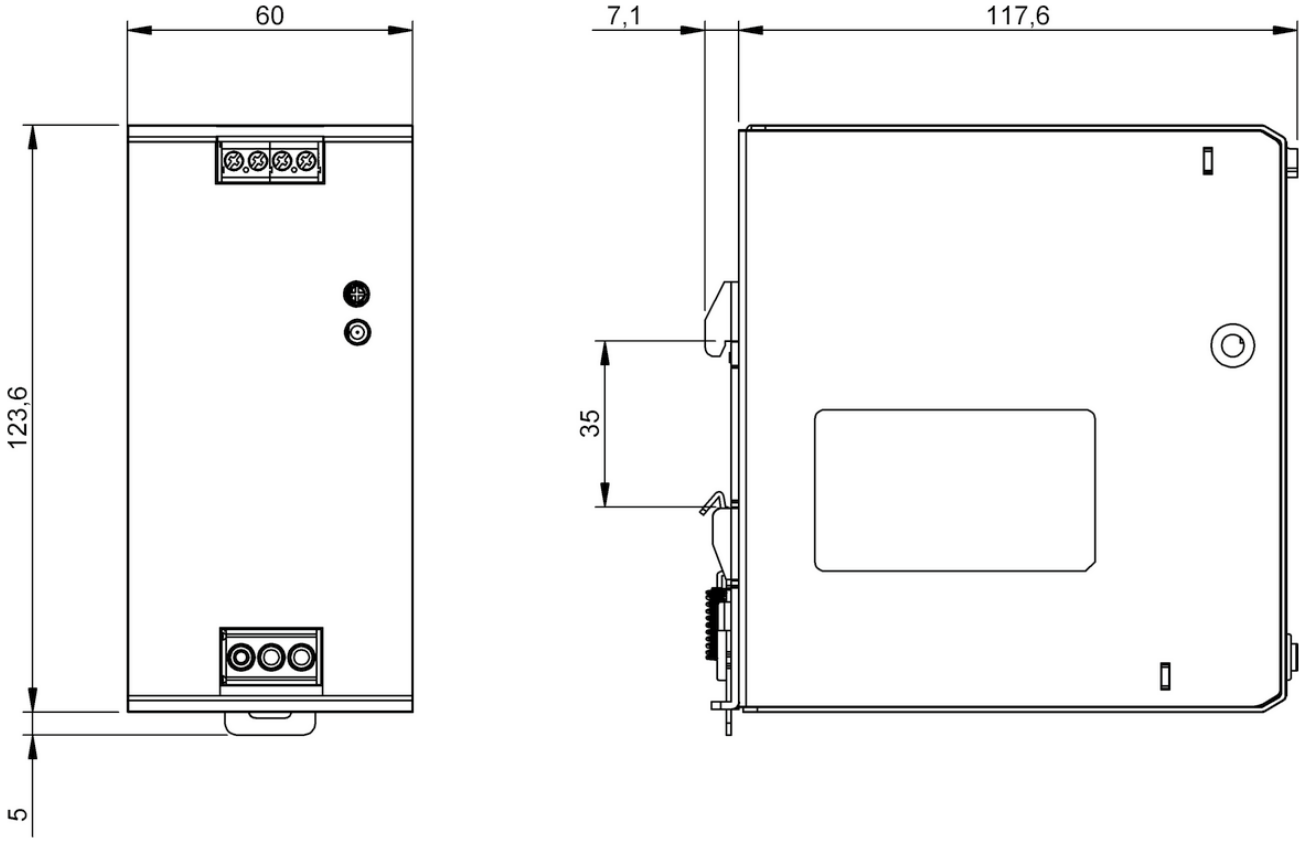

BAE0113

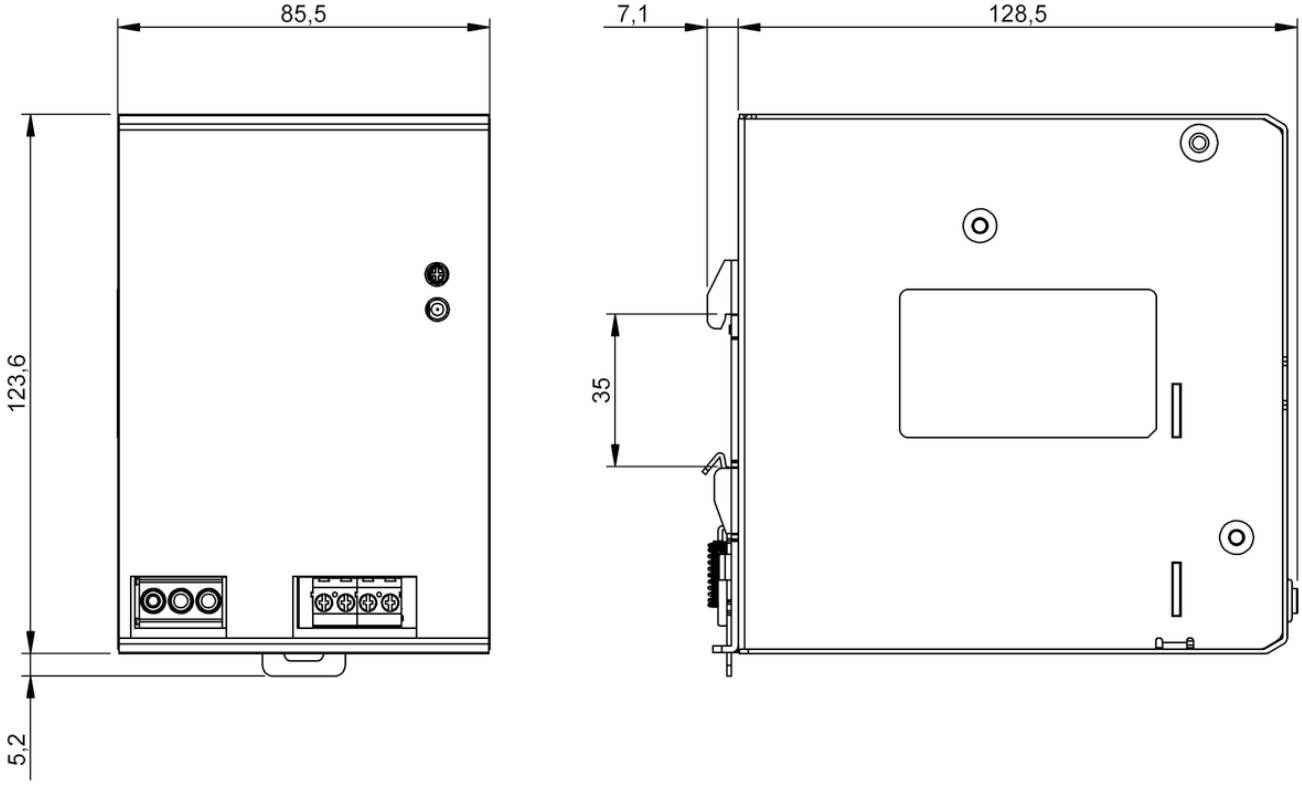

BAE0114

Do you need more details? Our Product Finder at www.balluff.com provides you with product-specific information, including technical drawings, data sheets, user guides and more for each individual product. All items are available for download.

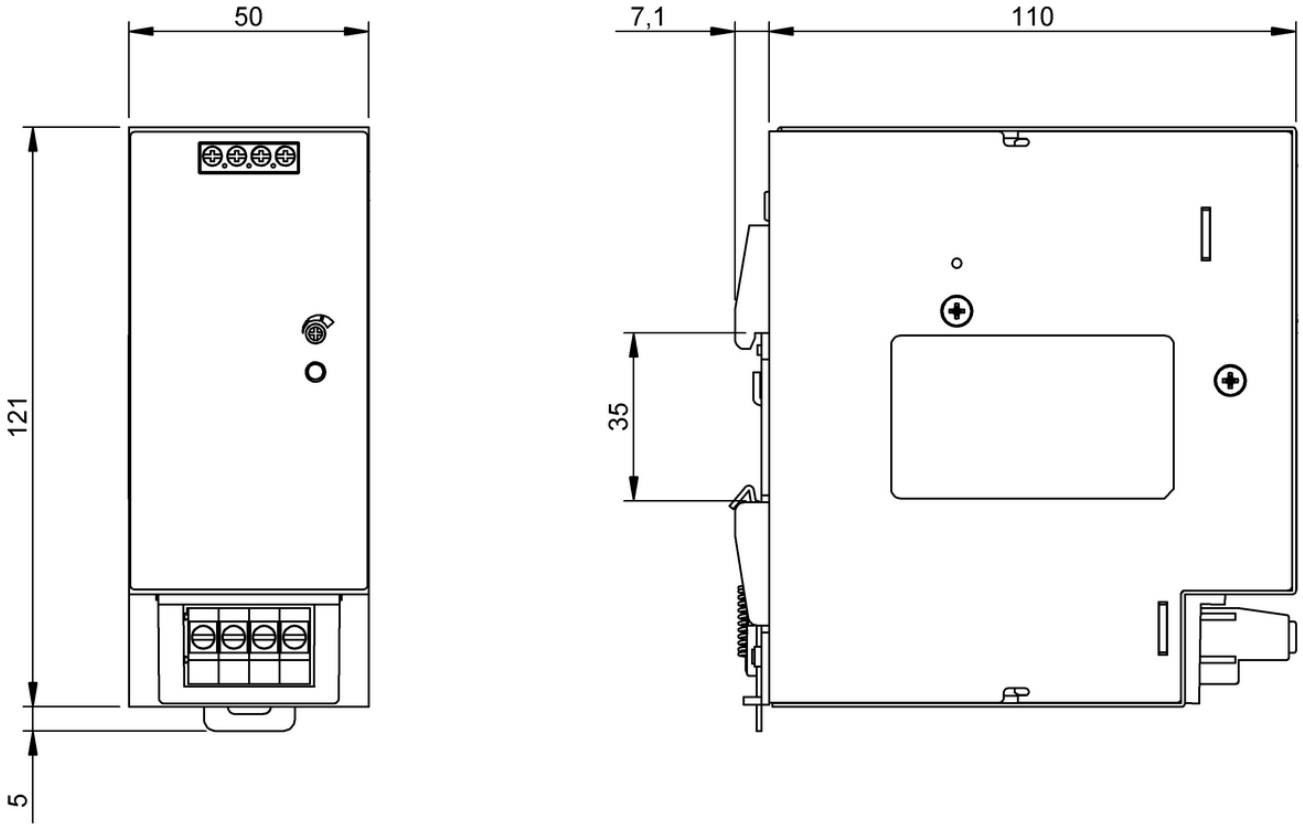

BAE0115

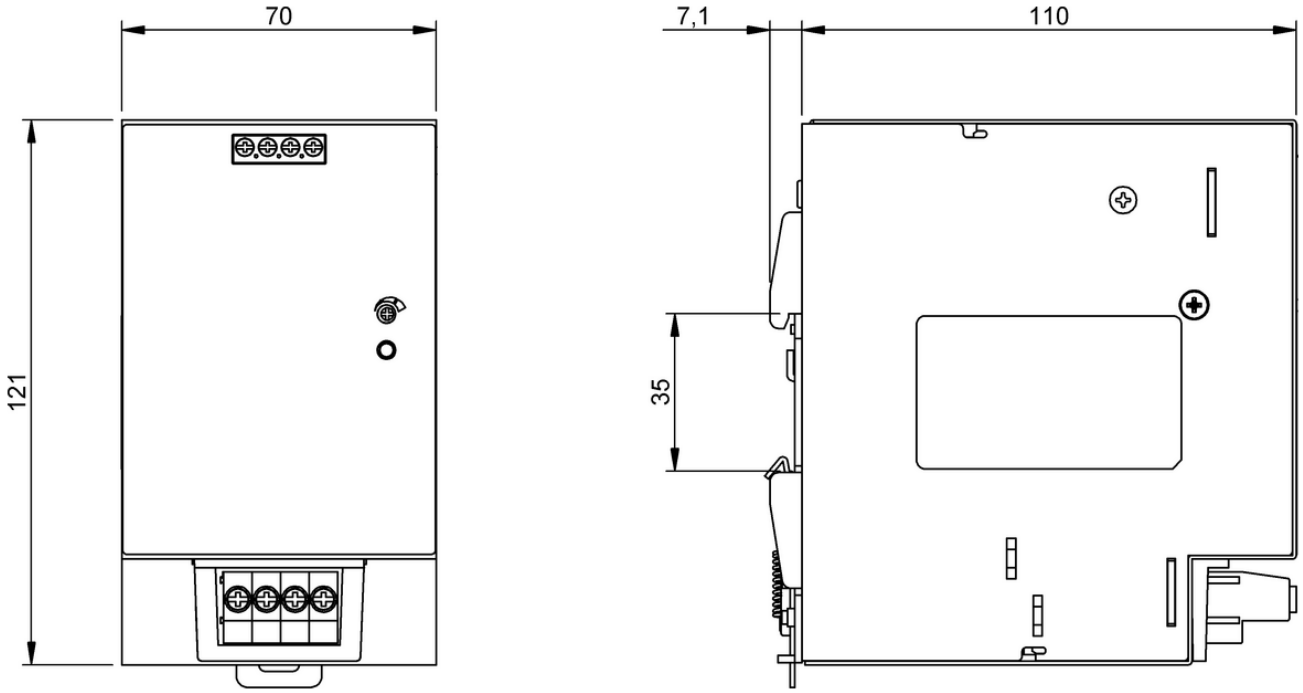

BAE0116

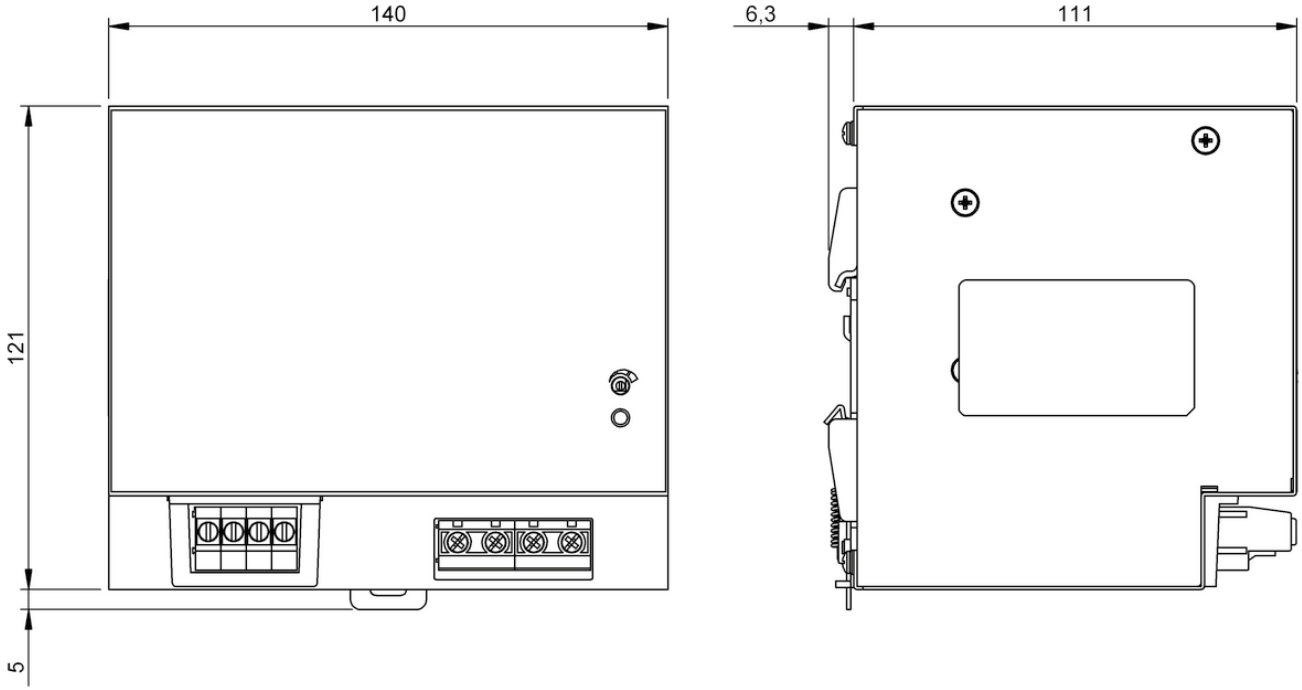

BAE0117

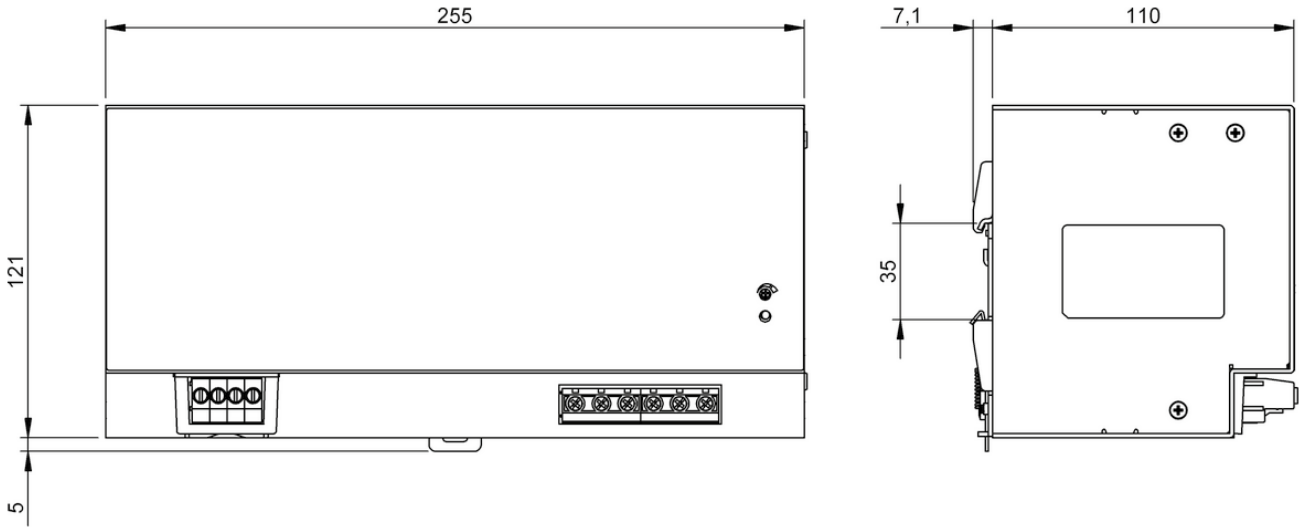

BAE0118

Power Supplies

BASICS AND GLOSSARY

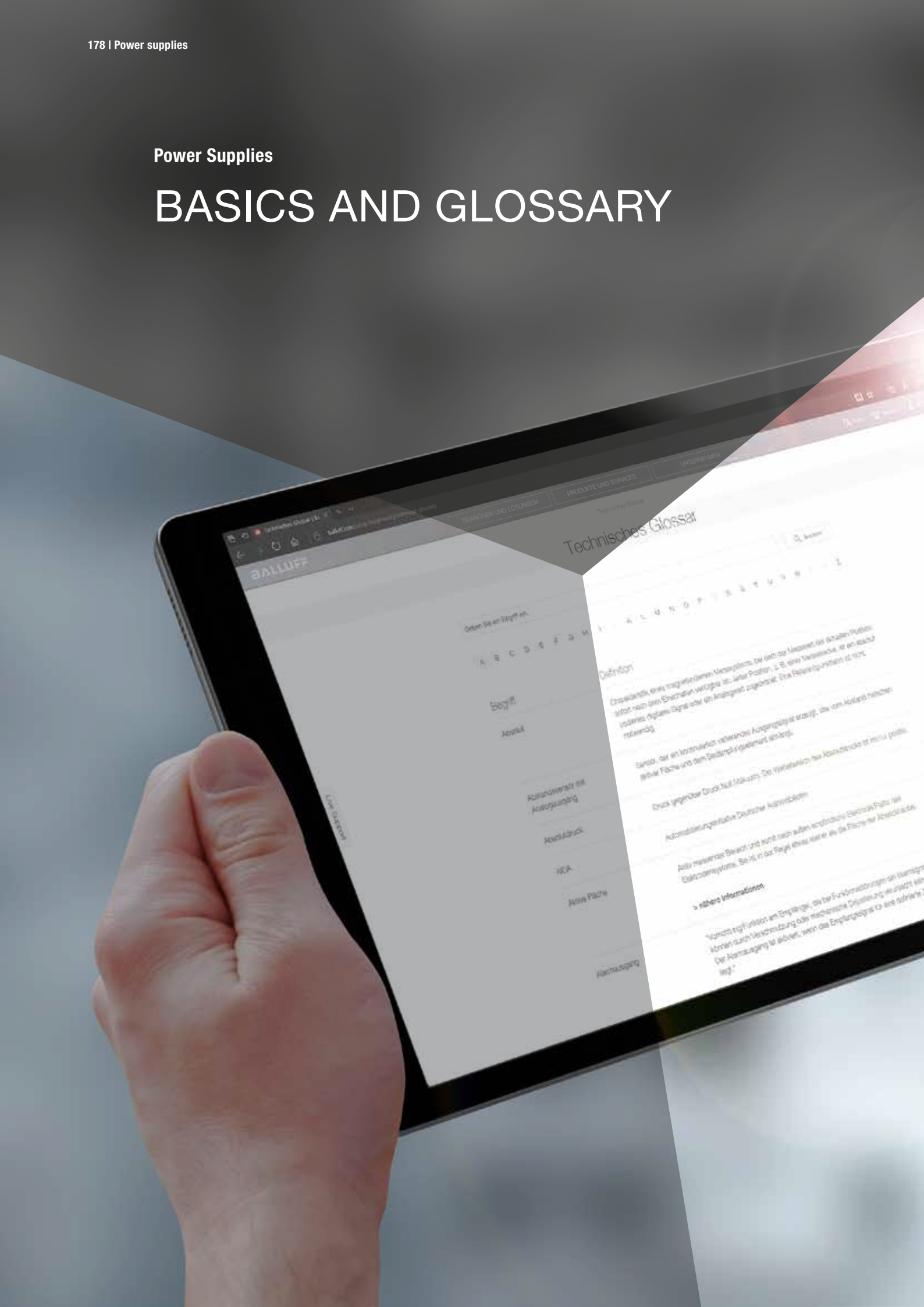

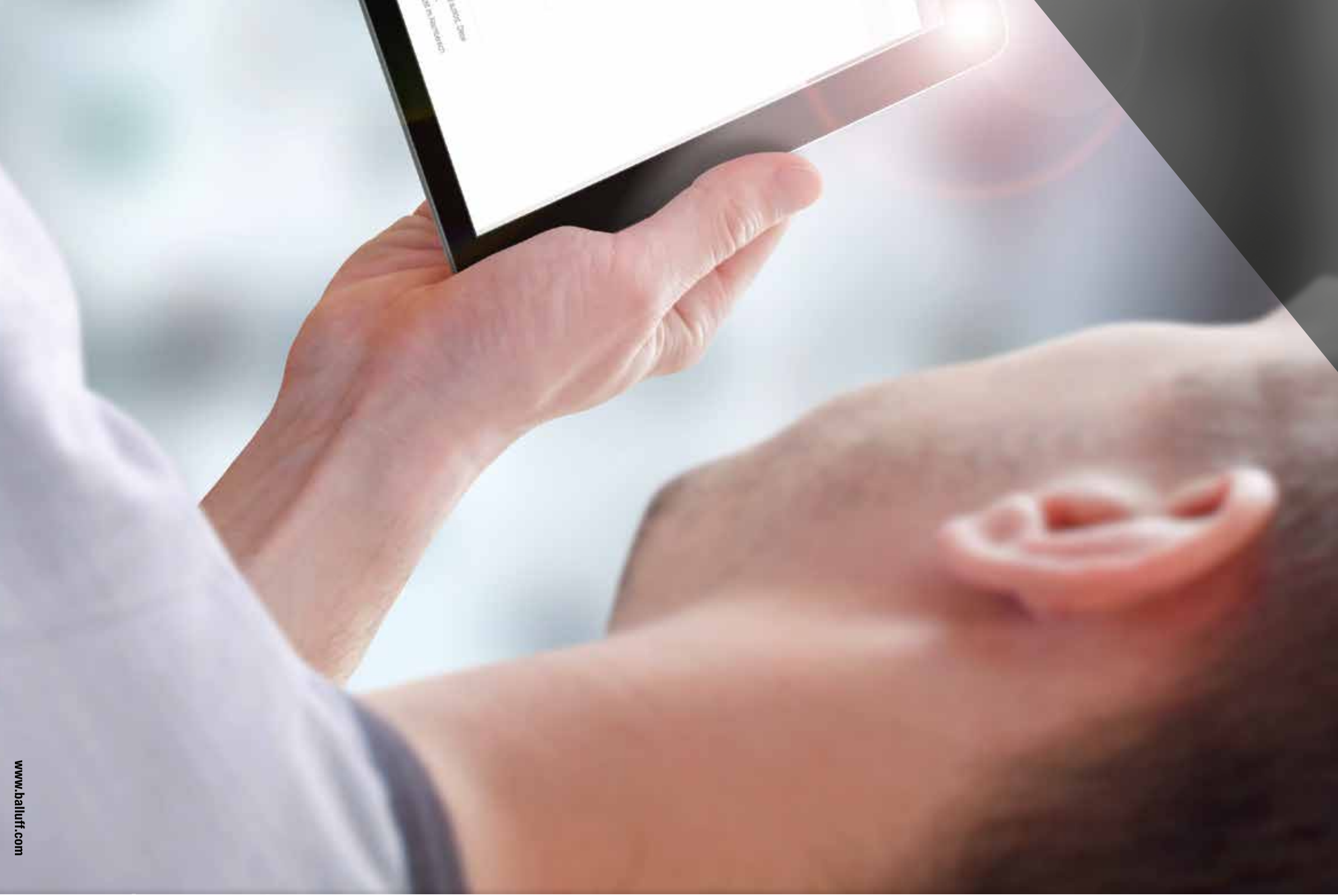

www.balluff.com

Wear indicator

Lifetime: Irreversible over a long period of time
Lifetime shows the remaining service life of the device, based on the total of all loads.

Load level

Load level: Short term reversible
Load level indicates the current load on the device.
The display indicates the load without any delay.

Heartbeat

Stress level: Medium term reversible
Stress level indicates the physical and thermal loads.
Changing the load has an effect on device wear.

Short circuit protection (output)

Hiccup mode overload protection*

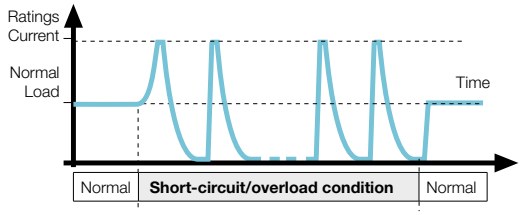

Hiccup mode with turn-off overload protection*

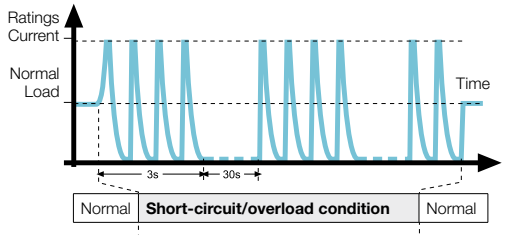

Current limiter and forward characteristic*

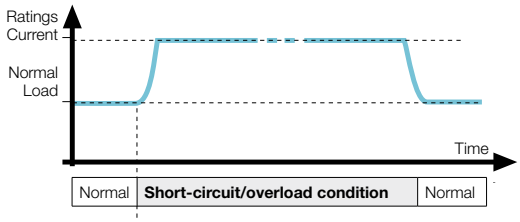

Temperature under-load

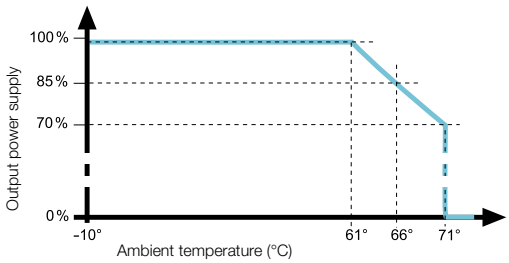

LED definition

DC ON	DC LO	Possible situation
○ off	○ off	AC power supply off, internal fuse burned out, short circuit
● on	○ off	Normal operation
○ off	● on	Output voltage < 19.2 V
● on	● on	Power supply failure

*Note: Diagrams are for illustration only.
They do not reflect the actual waveforms.

Power supply

Provision of a defined voltage to the electrical consumer.

Overload protection

Protection for a sensor against overloading which occurs when turning on alternating-current devices (contactors/relays).

Alphanumeric Index

SORTED BY ORDERING CODE

BAE00EP	BAE PS-XA-1W-24-038-602	163
BAE00FL	BAE PS-XA-1W-24-080-605	163
BAE00FW	BAE PS-XA-1W-24-038-607	163
BAE00FY	BAE PS-XA-1W-24-080-606	163
BAE00LJ	BAE PS-XA-1S-24-100-103	167
BAE00M3	BAE PS-XA-1S-24-200-104	167
BAE00T4	BAE PS-XA-1S-24-050-102	167
BAE00TJ	BAE PS-XA-1W-24-038-602-I	167
BAE00TK	BAE PS-XA-1W-24-038-603-I	167
BAE00TL	BAE PS-XA-1W-24-080-604-I	167
BAE00TM	BAE PS-XA-1W-24-080-605-I	167
BAE00TR	BAE PS-XA-1W-24-025-101	167
BAE0111	BAE PS-XA-1W-24-025-016	173
BAE0112	BAE PS-XA-1W-24-050-017	173
BAE0113	BAE PS-XA-1W-24-100-018	173
BAE0114	BAE PS-XA-1W-24-200-019	173
BAE0115	BAE PS-XA-3Y-24-050-020	173
BAE0116	BAE PS-XA-3Y-24-100-021	173
BAE0117	BAE PS-XA-3Y-24-200-022	173
BAE0118	BAE PS-XA-3Y-24-400-023	173
BAE00ER		157
BAI BET-S12N-UDN-0001-_DW-ST_ _		153
BAI CMI-S12C-UDN-9999-_DZ-ZZ_ _		153
BCC0AA7		157
BCC0AJ0		157
BCC0CNY		157
BCC0CP0		157
BCC0E8P		153
BCC0E90		153
BCC0FMK		157
BCC0JF0		153
BCC0JF3		153
BCC06FN		153
BCC06J3		153
BES00EF		154
BIC000A	BIC 2I3-P2A50-M30MI3-SM4ACA	133
BIC005J	BIC 2I3-P2A50-M30MI3-BPX0C-002-M4CA	133
BIC0007	BIC 1P0-P2A50-M30MI3-SM4A4A	141
BIC007E	BIC 2B0-ITA50-M30MF1-SM4A5A	125
BIC007F	BIC 1B0-IT1A7-Q40KFU-SM4A4A	125
BIC007H	BIC 2B0-IT1A7-Q40KFU-SM4A5A	125
BIC007J	BIC 1I3-P2A50-Q40KFU-EPX0-002-M4CA	131
BIC007K	BIC 2I3-P2A50-Q40KFU-EPX0-002-M4CA	131
BIC007L	BIC 1B0-ITA50-M30MF1-SM4A5A	125
BIC007T	BIC 1I22-P2A02-M18MN2-EPX07-050	131
BIC007U	BIC 2I22-P2A02-M18MF2-EPX07-050	131
BIC0008	BIC 2P0-P2A50-M30MI3-SM4A5A	141
BIC0009	BIC 1I3-P2A50-M30MI3-SM4ACA	133
BIC0070	BIC 1B0-ITA50-Q40KFU-SM4A4A	125
BIC0071	BIC 2B0-ITA50-Q40KFU-SM4A5A	125
BIC0073	BIC 1P0-P25A0-Q120AE-SA3A50	141
BIC0074	BIC 2P0-P25A0-Q120AE-SA3A50	141
BIC0075	BIC 1P0-P25A0-Q120AE-SA3A40	141
BIC0076	BIC 2P0-P25A0-Q120AE-SA3A40	141
BIC0077	BIC 1I1-P2A05-M12MM-BPX0-003-M45A	131
BIC0078	BIC 2I1-P2A05-M12MF-BPX0-003-M44A	131
BIC0086	BIC 1B1-IT1A0-M30EI21-SM4A5A	125
BIC0087	BIC 2B1-IT1A0-M30EI21-SM4A5A	125
BIS018E		154
BIS0180		154
BNI00AA	BNI EIP-527-005-Z040	57
BNI00A9	BNI PNT-527-005-Z040	37
BNI00AE	BNI IOL-772-002-E032	119
BNI00AF	BNI IOL-311-002-K006	91
BNI00AJ	BNI IOL-719-002-Z012	85
BNI00AU	BNI IOL-302-002-Z046	83
BNI00AW	BNI IOL-311-S02-K006-C01	91
BNI00AY	BNI IOL-104-002-Z046	83
BNI00CA	BNI IOL-771-002-K027-003	119
BNI00CC	BNI IOL-772-002-K027-003	119
BNI00CE		154
BNI00CL	BNI IOL-355-S02-Z013	13
BNI00CM	BNI IOL-302-002-Z042	87
BNI00CN	BNI IOL-302-S02-Z012	85
BNI00CP	BNI IOL-302-S02-Z026	89
BNI00CR	BNI IOL-104-S02-Z012	85
BNI00CY	BNI EIP-538-105-R015	59
BNI00E7	BNI CIB-508-105-Z015	51
BNI000F	BNI EIP-950-000-Z009	77
BNI000P	BNI IOL-101-000-K018	85
BNI000R	BNI IOL-102-000-K019	83
BNI0001	BNI DNT-104-000-Z004	67
BNI001W	BNI IOL-101-S01-K018	85
BNI001Y	BNI IOL-102-S01-K019	83
BNI002A	BNI CCL-302-100-Z001	53
BNI0003	BNI DNT-302-000-Z005	67
BNI003T	BNI IOL-104-S01-Z012-C01	87
BNI003U	BNI IOL-302-000-Z012	87
BNI003Y	BNI IOL-256-S01-Z013	13
BNI003W	BNI IOL-252-S01-Z013	13
BNI004A	BNI EIP-502-105-Z015	57
BNI004F	BNI EIP-302-105-Z015	57
BNI004K	BNI IOL-309-000-K024	93
BNI004L	BNI IOL-310-000-K025	93
BNI004M	BNI EIP-104-105-Z015	59
BNI004N	BNI PBS-507-002-Z011	43
BNI004U	BNI PNT-502-105-Z015	37
BNI004W	BNI IOL-770-V06-A027	115
BNI0005	BNI IOL-102-000-K006	93
BNI005A	BNI DNT-502-100-Z001	67
BNI005C	BNI PBS-104-101-Z001	43
BNI005E	BNI TCP-951-000-E028	77
BNI005H	BNI PNT-508-105-Z015	37
BNI005L	BNI IOL-302-000-K006	89
BNI005M	BNI IOL-771-000-K027	119
BNI005N	BNI IOL-772-000-K027	119
BNI005P	BNI IOL-104-S01-Z012-C02	87
BNI005R	BNI PBS-502-101-Z001	43
BNI005T	BNI IOL-302-S01-K006	91
BNI005U	BNI IOL-302-000-K006-C01	89

BNI005W	BNI IOL-302-S01-K006-C01	91
BNI0006	BNI IOL-104-000-K006	91
BNI006A	BNI EIP-508-105-Z015	57
BNI006C	BNI PNT-502-102-Z015	37
BNI006E	BNI IOL-750-V09-K007	113
BNI006F	BNI IOL-752-V13-K007	115
BNI006H	BNI IOL-750-V11-K007	113
BNI006J	BNI IOL-750-V08-K007	113
BNI006K	BNI IOL-750-V10-K007	113
BNI006L	BNI IOL-750-V13-K007	113
BNI006M	BNI IOL-751-V09-K007	113
BNI006N	BNI IOL-751-V08-K007	113
BNI006P	BNI IOL-751-V10-K007	113
BNI006R	BNI IOL-751-V13-K007	115
BNI006T	BNI IOL-751-V11-K007	115
BNI006U	BNI IOL-752-V09-K007	115
BNI006W	BNI IOL-752-V11-K007	115
BNI006Y	BNI IOL-752-V08-K007	115
BNI006Z	BNI IOL-752-V10-K007	115
BNI0007	BNI IOL-709-000-K006	93
BNI007M	BNI PNT-509-105-Z033	37
BNI007P	BNI IOL-309-000-K024-001	93
BNI007R	BNI IOL-310-000-K025-001	93
BNI007Z	BNI IOL-302-002-K006	89
BNI0008	BNI IOL-710-000-K006	93
BNI008C	BNI CIE-508-105-Z015	47
BNI008M	BNI EIP-508-105-R015	59
BNI008P	BNI EIP-302-105-R015	59
BNI008Y	BNI EIP-104-105-R015	59
BNI008Z	BNI EIP-502-105-R015	59
BNI009T	BNI EIP-507-005-Z040	57
BNI009U	BNI ECT-507-005-Z040	71
BNI0021	BNI IOL-104-000-K021	83
BNI0022	BNI IOL-104-S01-K021	83
BNI0031	BNI IOL-102-000-Z012	87
BNI0032	BNI IOL-104-000-Z012	87
BNI0033	BNI IOL-252-000-Z013	13
BNI0034	BNI IOL-256-000-Z013	13
BNI0035	BNI IOL-302-000-Z013	87
BNI0040	BNI CCL-502-100-Z001	53
BNI0046	BNI IOL-302-S02-Z013	87
BNI0047	BNI PBS-302-101-Z001	43
BNI0048	BNI IOL-302-S01-Z013-C01	89
BNI0050	BNI IOL-302-000-Z026	89
BNI0052	BNI PNT-302-105-Z015	37
BNI0053	BNI PNT-104-105-Z015	37
BNI0061	BNI IOL-106-S01-Z012-C01	85
BNI0062	BNI IOL-106-S01-Z012	85
BNI0063	BNI IOL-106-000-Z012	85
BNI0067	BNI TCP-952-000-E029	77
BNI0074	BNI IOL-106-000-K006	91
BNI0075	BNI IOL-106-S01-K006	91
BNI0076	BNI IOL-106-S01-K006-C01	91
BNI0077	BNI ECT-508-105-Z015	71
BNI0085		154
BNI0089		153
BNI0090	BNI IOL-104-S02-R012	89
BNI0091	BNI IOL-302-S02-R026	89
BNI0092	BNI PNT-507-005-Z040	37
BNI0093	BNI IOL-309-002-Z019	83
BNI0095	BNI CIE-302-105-Z015	47
BNI0098	BNI IOF-329-P02-Z038	17
BNI0099	BNI IOL-102-002-Z019	83
BSG001E		157
BSG001J		157
BSG001T		157
BSG001W		157
BSG0018	BAE PS-XA-1W-24-038-602	163

Alphanumeric Index

SORTED BY PART NUMBER

BNI0033	**BNI IOL-252-000-Z013**	**13**
BNI003W	**BNI IOL-252-S01-Z013**	**13**
BNI0034	**BNI IOL-256-000-Z013**	**13**
BNI003Y	**BNI IOL-256-S01-Z013**	**13**
BNI00CL	**BNI IOL-355-S02-Z013**	**13**
BNI0098	**BNI IOF-329-P02-Z038**	**17**
BNI005H	**BNI PNT-508-105-Z015**	**37**
BNI007M	**BNI PNT-509-105-Z033**	**37**
BNI004U	**BNI PNT-502-105-Z015**	**37**
BNI006C	**BNI PNT-502-102-Z015**	**37**
BNI0092	**BNI PNT-507-005-Z040**	**37**
BNI00A9	**BNI PNT-527-005-Z040**	**37**
BNI0052	**BNI PNT-302-105-Z015**	**37**
BNI0053	**BNI PNT-104-105-Z015**	**37**
BNI005R	**BNI PBS-502-101-Z001**	**43**
BNI004N	**BNI PBS-507-002-Z011**	**43**
BNI0047	**BNI PBS-302-101-Z001**	**43**
BNI005C	**BNI PBS-104-101-Z001**	**43**
BNI008C	**BNI CIE-508-105-Z015**	**47**
BNI0095	**BNI CIE-302-105-Z015**	**47**
BNI00E7	**BNI CIB-508-105-Z015**	**51**
BNI0040	**BNI CCL-502-100-Z001**	**53**
BNI002A	**BNI CCL-302-100-Z001**	**53**
BNI006A	**BNI EIP-508-105-Z015**	**57**
BNI004A	**BNI EIP-502-105-Z015**	**57**
BNI009T	**BNI EIP-507-005-Z040**	**57**
BNI00AA	**BNI EIP-527-005-Z040**	**57**
BNI004F	**BNI EIP-302-105-Z015**	**57**
BNI004M	**BNI EIP-104-105-Z015**	**59**
BNI008M	**BNI EIP-508-105-R015**	**59**
BNI00CY	**BNI EIP-538-105-R015**	**59**
BNI008Z	**BNI EIP-502-105-R015**	**59**
BNI008P	**BNI EIP-302-105-R015**	**59**
BNI008Y	**BNI EIP-104-105-R015**	**59**
BNI005A	**BNI DNT-502-100-Z001**	**67**
BNI0003	**BNI DNT-302-000-Z005**	**67**
BNI0001	**BNI DNT-104-000-Z004**	**67**
BNI0077	**BNI ECT-508-105-Z015**	**71**
BNI009U	**BNI ECT-507-005-Z040**	**71**
BNI005E	**BNI TCP-951-000-E028**	**77**
BNI0067	**BNI TCP-952-000-E029**	**77**
BNI000F	**BNI EIP-950-000-Z009**	**77**
BNI0093	**BNI IOL-309-002-Z019**	**83**
BNI0099	**BNI IOL-102-002-Z019**	**83**
BNI00AU	**BNI IOL-302-002-Z046**	**83**
BNI00AY	**BNI IOL-104-002-Z046**	**83**
BNI000R	**BNI IOL-102-000-K019**	**83**
BNI001Y	**BNI IOL-102-S01-K019**	**83**
BNI0021	**BNI IOL-104-000-K021**	**83**
BNI0022	**BNI IOL-104-S01-K021**	**83**
BNI000P	**BNI IOL-101-000-K018**	**85**
BNI001W	**BNI IOL-101-S01-K018**	**85**
BNI00CN	**BNI IOL-302-S02-Z012**	**85**
BNI00CR	**BNI IOL-104-S02-Z012**	**85**
BNI0063	**BNI IOL-106-000-Z012**	**85**
BNI0062	**BNI IOL-106-S01-Z012**	**85**
BNI0061	**BNI IOL-106-S01-Z012-C01**	**85**
BNI00AJ	**BNI IOL-719-002-Z012**	**85**
BNI003U	**BNI IOL-302-000-Z012**	**87**
BNI0032	**BNI IOL-104-000-Z012**	**87**
BNI003T	**BNI IOL-104-S01-Z012-C01**	**87**
BNI005P	**BNI IOL-104-S01-Z012-C02**	**87**
BNI0031	**BNI IOL-102-000-Z012**	**87**
BNI00CM	**BNI IOL-302-002-Z042**	**87**
BNI0046	**BNI IOL-302-S02-Z013**	**87**
BNI0035	**BNI IOL-302-000-Z013**	**87**
BNI0048	**BNI IOL-302-S01-Z013-C01**	**89**
BNI00CP	**BNI IOL-302-S02-Z026**	**89**
BNI0050	**BNI IOL-302-000-Z026**	**89**
BNI0090	**BNI IOL-104-S02-R012**	**89**
BNI0091	**BNI IOL-302-S02-R026**	**89**
BNI005L	**BNI IOL-302-000-K006**	**89**
BNI005U	**BNI IOL-302-000-K006-C01**	**89**
BNI007Z	**BNI IOL-302-002-K006**	**89**
BNI005T	**BNI IOL-302-S01-K006**	**91**
BNI005W	**BNI IOL-302-S01-K006-C01**	**91**
BNI00AF	**BNI IOL-311-002-K006**	**91**
BNI00AW	**BNI IOL-311-S02-K006-C01**	**91**
BNI0074	**BNI IOL-106-000-K006**	**91**
BNI0075	**BNI IOL-106-S01-K006**	**91**
BNI0076	**BNI IOL-106-S01-K006-C01**	**91**
BNI0006	**BNI IOL-104-000-K006**	**91**
BNI0005	**BNI IOL-102-000-K006**	**93**
BNI0007	**BNI IOL-709-000-K006**	**93**
BNI0008	**BNI IOL-710-000-K006**	**93**
BNI007P	**BNI IOL-309-000-K024-001**	**93**
BNI004K	**BNI IOL-309-000-K024**	**93**
BNI004L	**BNI IOL-310-000-K025**	**93**
BNI007R	**BNI IOL-310-000-K025-001**	**93**
BNI006J	**BNI IOL-750-V08-K007**	**113**
BNI006E	**BNI IOL-750-V09-K007**	**113**
BNI006K	**BNI IOL-750-V10-K007**	**113**
BNI006H	**BNI IOL-750-V11-K007**	**113**
BNI006L	**BNI IOL-750-V13-K007**	**113**
BNI006N	**BNI IOL-751-V08-K007**	**113**
BNI006M	**BNI IOL-751-V09-K007**	**113**
BNI006P	**BNI IOL-751-V10-K007**	**113**
BNI006T	**BNI IOL-751-V11-K007**	**115**
BNI006R	**BNI IOL-751-V13-K007**	**115**
BNI006Y	**BNI IOL-752-V08-K007**	**115**
BNI006U	**BNI IOL-752-V09-K007**	**115**
BNI006Z	**BNI IOL-752-V10-K007**	**115**
BNI006W	**BNI IOL-752-V11-K007**	**115**
BNI006F	**BNI IOL-752-V13-K007**	**115**
BNI004W	**BNI IOL-770-V06-A027**	**115**
BNI005M	**BNI IOL-771-000-K027**	**119**
BNI00CA	**BNI IOL-771-002-K027-003**	**119**
BNI005N	**BNI IOL-772-000-K027**	**119**
BNI00CC	**BNI IOL-772-002-K027-003**	**119**
BNI00AE	**BNI IOL-772-002-E032**	**119**
BIC0086	**BIC 1B1-IT1A0-M30EI21-SM4A5A**	**125**
BIC0087	**BIC 2B1-IT1A0-M30EI21-SM4A5A**	**125**
BIC007L	**BIC 1B0-ITA50-M30MF1-SM4A5A**	**125**
BIC007E	**BIC 2B0-ITA50-M30MF1-SM4A5A**	**125**
BIC007F	**BIC 1B0-IT1A7-Q40KFU-SM4A4A**	**125**
BIC007H	**BIC 2B0-IT1A7-Q40KFU-SM4A5A**	**125**
BIC0070	**BIC 1B0-ITA50-Q40KFU-SM4A4A**	**125**
BIC0071	**BIC 2B0-ITA50-Q40KFU-SM4A5A**	**125**
BIC007J	**BIC 1I3-P2A50-Q40KFU-EPX0-002-M4CA**	**131**
BIC007K	**BIC 2I3-P2A50-Q40KFU-EPX0-002-M4CA**	**131**
BIC0077	**BIC 1I1-P2A05-M12MM-BPX0-003-M45A**	**131**
BIC0078	**BIC 2I1-P2A05-M12MF-BPX0-003-M44A**	**131**
BIC007T	**BIC 1I22-P2A02-M18MN2-EPX07-050**	**131**
BIC007U	**BIC 2I22-P2A02-M18MF2-EPX07-050**	**131**
BIC0009	**BIC 1I3-P2A50-M30MI3-SM4ACA**	**133**
BIC005J	**BIC 2I3-P2A50-M30MI3-BPX0C-002-M4CA**	**133**
BIC000A	**BIC 2I3-P2A50-M30MI3-SM4ACA**	**133**
BIC0007	**BIC 1P0-P2A50-M30MI3-SM4A4A**	**141**
BIC0008	**BIC 2P0-P2A50-M30MI3-SM4A5A**	**141**
BIC0075	**BIC 1P0-P25A0-Q120AE-SA3A40**	**141**
BIC0076	**BIC 2P0-P25A0-Q120AE-SA3A40**	**141**
BIC0073	**BIC 1P0-P25A0-Q120AE-SA3A50**	**141**
BIC0074	**BIC 2P0-P25A0-Q120AE-SA3A50**	**141**
BAE00ER		**157**
BAI BET-S12N-UDN-0001-_DW-ST_ _		**153**
BAI CMI-S12C-UDN-9999-_DZ-ZZ_ _		**155**

BCC0AA7		**157**
BCC0AJ0		**157**
BCC0CNY		**157**
BCC0CP0		**157**
BCC0E8P		**153**
BCC0E90		**153**
BCC0FMK		**157**
BCC0JF0		**153**
BCC0JF3		**153**
BCC06FN		**153**
BCC06J3		**153**
BES00EF		**154**
BIS018E		**154**
BIS0180		**154**
BNI00CE		**154**
BNI000F		**153**
BNI005E		**153**
BNI0067		**153**
BNI0085		**154**
BNI0089		**153**
BSG001E		**157**
BSG001J		**157**
BSG001T		**157**
BSG001W		**156**
BSG0018	**BAE PS-XA-1W-24-038-602**	**163**
BAE00FW	**BAE PS-XA-1W-24-038-607**	**163**
BAE00FL	**BAE PS-XA-1W-24-080-605**	**163**
BAE00FY	**BAE PS-XA-1W-24-080-606**	**163**
BAE00T4	**BAE PS-XA-1S-24-050-102**	**167**
BAE00LJ	**BAE PS-XA-1S-24-100-103**	**167**
BAE00M3	**BAE PS-XA-1S-24-200-104**	**167**
BAE00TR	**BAE PS-XA-1W-24-025-101**	**167**
BAE00TJ	**BAE PS-XA-1W-24-038-602-I**	**167**
BAE00TK	**BAE PS-XA-1W-24-038-603-I**	**167**
BAE00TL	**BAE PS-XA-1W-24-080-604-I**	**167**
BAE00TM	**BAE PS-XA-1W-24-080-605-I**	**167**
BAE0111	**BAE PS-XA-1W-24-025-016**	**173**
BAE0112	**BAE PS-XA-1W-24-050-017**	**173**
BAE0113	**BAE PS-XA-1W-24-100-018**	**173**
BAE0114	**BAE PS-XA-1W-24-200-019**	**173**
BAE0115	**BAE PS-XA-3Y-24-050-020**	**173**
BAE0116	**BAE PS-XA-3Y-24-100-021**	**173**
BAE0117	**BAE PS-XA-3Y-24-200-022**	**173**
BAE0118	**BAE PS-XA-3Y-24-400-023**	**173**

Global Project Management

WE ARE EVERYWHERE FOR YOU

Always where you need us
Wherever you are doing business, we will support you locally. We work closely with machine and systems builders, systems integrators, planning offices and maintenance engineers. Balluff has constructed a global network for you consisting of technical consulting, sales and after-sales services.

Project manuals and approval lists
We provide you with custom tailored product data for smooth running of your projects. You receive project-specific manuals and approval lists. And personal contacts from Balluff are at your side throughout the entire project.

Individual services
If our services need to be even more personalized, we make this possible as well: with individual e-catalogs, application-specific product modifications, integrated software and system solutions and comprehensive logistics concepts.

Questions? Contact us. We are happy to help.

innovating automation

innovating automation

Balluff

WE OPEN UP NEW PERSPECTIVES

Balluff is a leading provider of high-value sensor, identification and image processing solutions including networking technology and software for any automation requirement. Family owned for more than 100 years, Balluff currently employs around 3600 persons in 38 subsidiaries with sales, production and development facilities around the world to ensure your success. Together with our representatives we guarantee the highest quality standards in 68 countries so that you always get the best.

We perform top services for innovative solutions that increase your competitive ability. We deliver a consistent digital focus, manufacturing expertise, and high personal dedication.

We adhere to our motto "Innovating Automation" as pacesetters of automation, refiners and new developers, and technological trailblazers. In open exchange with associations, universities and research institutes as well as in close contact with our customers, we create new industrial sector solutions for automation. As a future-looking company we keep our eye not only on the traditional areas of automation, but also devote ourselves to the development of holistic applications for an increasingly digital and networked world.

We have the future firmly in view in everything we do. With a sophisticated environmental management system, we protect the environment and handle our resources with care. This also creates for you the best prerequisites for sustained action.

You can always rely on us, our products and our adherence to delivery dates and schedule — All in the name of mutually beneficial partnership.

Headquarters
Balluff GmbH
Schurwaldstrasse 9
73765 Neuhausen a. d. F.
Germany
Phone +49 7158 173-0
Fax +49 7158 5010
balluff@balluff.de

www.balluff.com

CONTACT OUR WORLDWIDE SUBSIDIARIES

Doc.-No. 942499 EN · E22 · Subject to changes. Replaces E21