BALLUFF

Products and Services

PRODUCTS FOR EFFICIENT AUTOMATION

innovating automation

RFID, Machine Vision and Optical Identification, Human Machine Interfaces

3

Innovative solutions

TO MEET YOUR AUTOMATION NEEDS

Plastics, Rubber and Tires
Mobility
Packaging, Foods and Beverages
Energy Generation

INNOVATIVE SOLUTIONS FOR ANY REQUIREMENT

To give you an overview of our range of offerings we have condensed our product portfolio into five volumes. This overview provides a list of topics contained in each volume.

1 — 2

Sensors 1
- Inductive Sensors
- Capacitive Sensors
- Photoelectric Sensors
- Magnetic Sensors
- Mechanical Cam Switches

Sensors 2
- Ultrasonic Sensors
- Magnetically Coded Sensors
- Magnetostrictive Sensors
- Inclination Sensors
- Pressure Sensors
- Temperature Sensors
- Flow Sensors
- Condition Monitoring Sensors

3 — 4 — 5

- RFID
- Machine Vision and Optical Identification
- Human Machine Interfaces

- Safety
- Industrial Networking
- Software and System Solutions
- Power Supplies

- Connectivity
- Accessories

Do you need more details? Our Product Finder at www.balluff.com provides you with product-specific information, including technical drawings, data sheets, user guides and more for each individual product. All items are available for download.

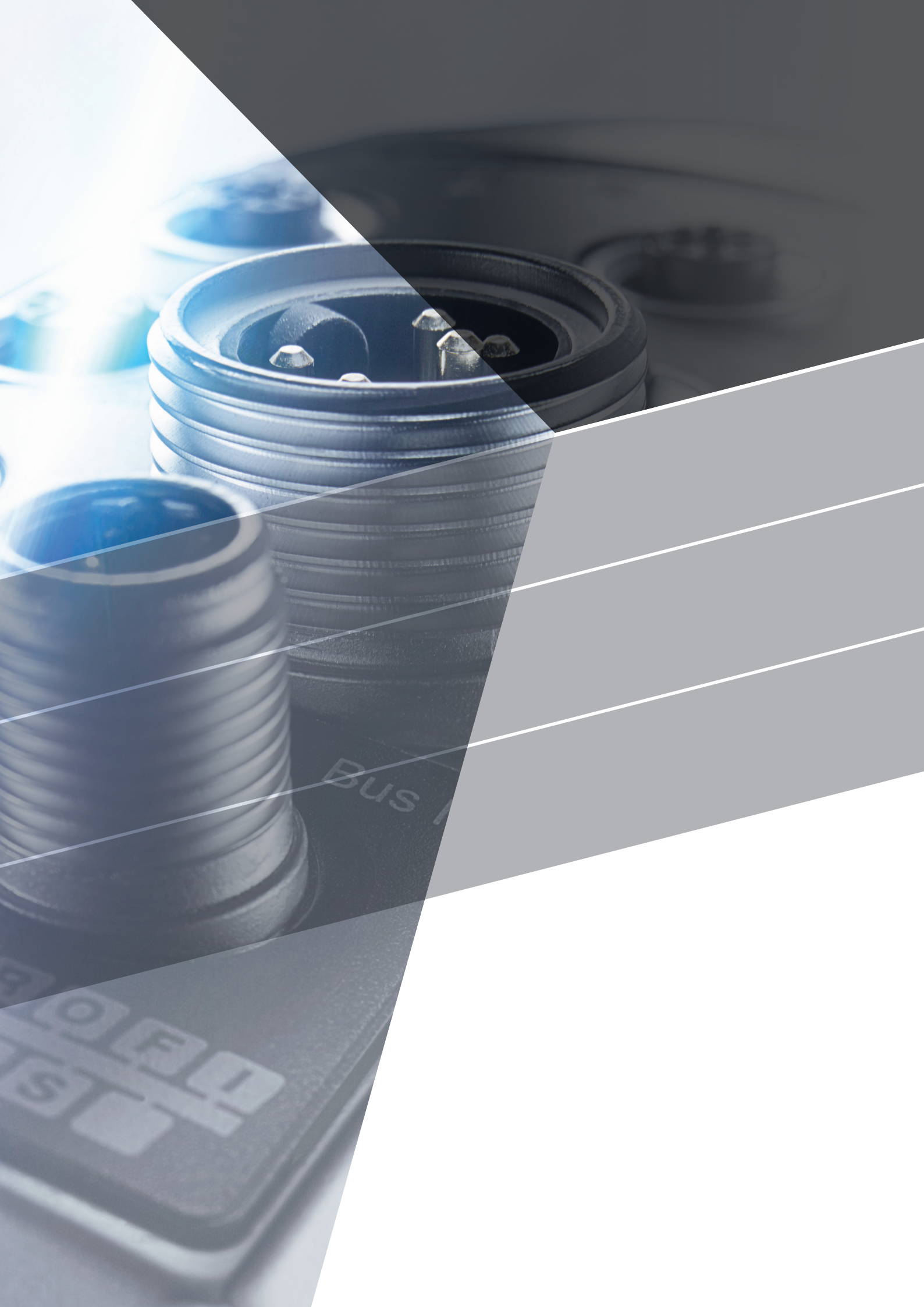

CONTENTS

8
RFID

12 RFID System UHF (860/960 MHz) BIS U
64 RFID System HF (13.56 MHz) BIS M
310 RFID System LF (70/455 kHz) BIS C
396 RFID System LF (125 kHz) BIS L

504
MACHINE VISION AND OPTICAL IDENTIFICATION

508 Machine Vision
532 Optical Identification

548
HUMAN MACHINE INTERFACES

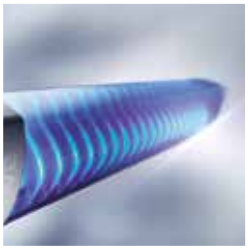

552 SmartLight – LED stack lights
560 Displays
566 Industrial Controller

ALPHANUMERIC INDEX 568
GLOBAL PROJECT MANAGEMENT 580
ABOUT BALLUFF 582

Automatic identification and tracking in production

RFID – RADIO FREQUENCY IDENTIFICATION.

innovating automation

Our BIS industrial RFID systems provide an overview in a modern production facility. Objects can be automatically identified and traced using RFID. To do this, a data carrier that functions as a memory is attached to the object to be identified. The data is transferred between data carrier and read/write head and via the processor unit to the controller.

Balluff offers a broad selection of innovative products for the low frequency (LF), high frequency (HF) and ultra-high frequency (UHF) range. With the BIS V frequency-independent processor unit, all systems can be flexibly combined with each other.

Your Balluff solutions

- RFID system HF (13.56 MHz) BIS M
- RFID system LF (70/455 kHz) BIS C
- RFID system LF (125 kHz) BIS L
- RFID system UHF (860/960 MHz) BIS U

RFID

12
RFID SYSTEM UHF (860/960 MHZ) BIS U

14 UHF data carriers (860/960 MHz)
26 UHF read/write heads and antennas (860/960 MHz)
32 UHF processor units (860/960 MHz)
60 UHF read/write heads (860/960 MHz) with integrated processor unit
62 Portable UHF read/write units (860/960 MHz)

64
RFID-SYSTEM HF (13.56 MHZ) BIS M

66 HF data carriers (13.56 MHz)
112 HF read/write heads and antennas (13.56 MHz)
192 HF processor units (13.56 MHz)
224 HF read/write heads (13.56 MHz) with integrated processor unit
306 HF communication modules (13.56 MHz)
308 Portable HF read/write units (13.56 MHz)

310
RFID-SYSTEM LF (70/455 KHZ) BIS C

312 LF data carriers (70/455 kHz)
334 LF read/write heads and antennas (70/455 kHz)
362 LF data couplers (70/455 kHz)
366 LF processor units (70/455 kHz)
388 LF read/write heads (70/455 kHz) with integrated processor unit
390 Portable LF read/write units (70/455kHz)

396
RFID-SYSTEM LF (125 KHZ) BIS L

398 LF data carriers (125 kHz)
408 LF read/write heads and antennas (125 kHz)
422 LF processor units (125 kHz)
440 LF read/write heads (125 kHz) with integrated processor unit
484 Portable LF read/write units (125 kHz)

486
BASICS AND GLOSSARY

Continuous transmission security and data transparency

RFID SYSTEM UHF (860/960 MHZ) BIS U

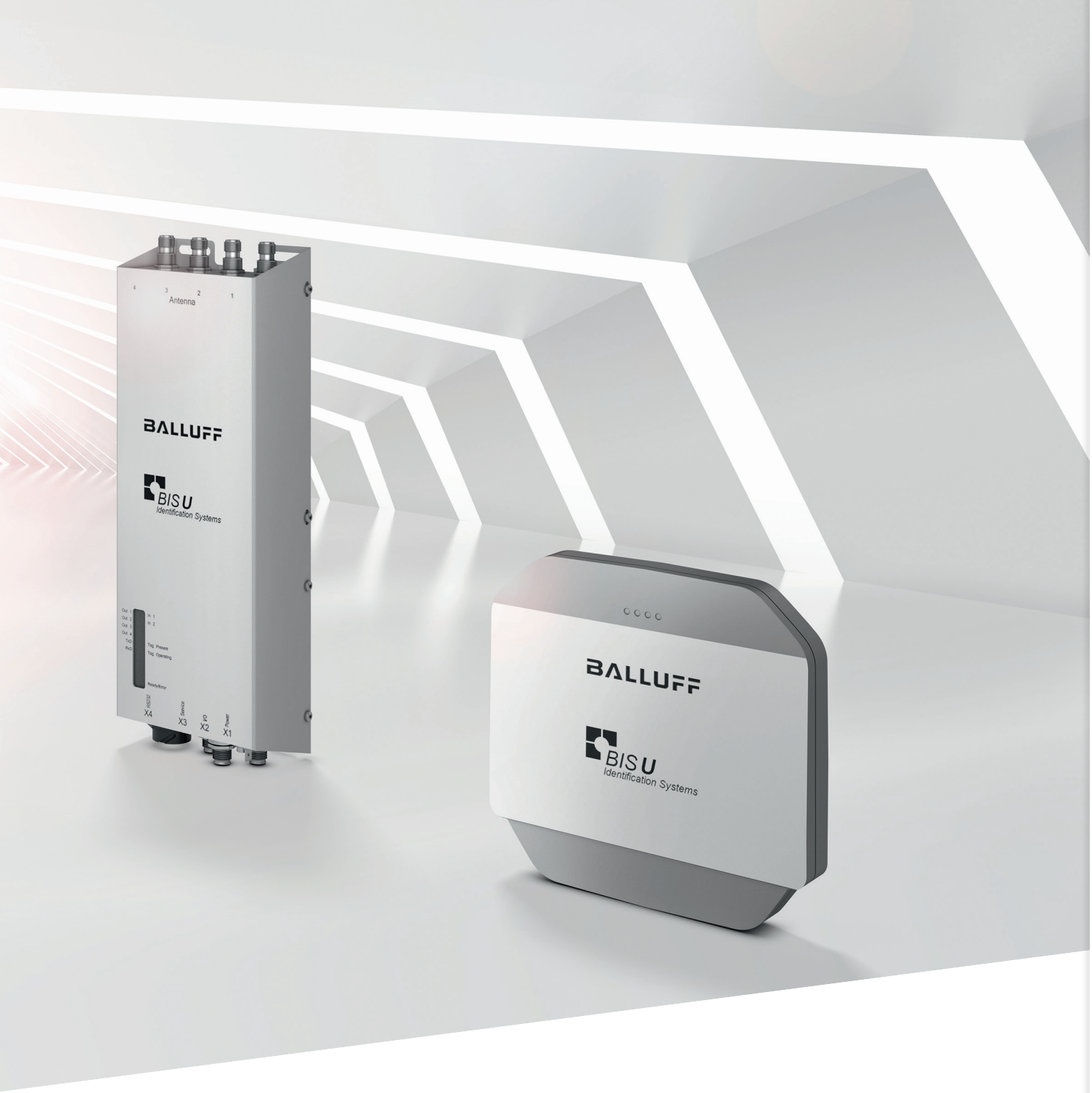

The BIS U UHF systems from Balluff ensure data transparency and traceability of your automation processes. UHF is a standard technology for identification solutions covering all processes. They help to achieve fast detection of tag information and continuous transmission security. By querying decentrally stored product- and process-data, UHF is a central component of traceability applications. Our UHF BIS U systems provide permanent data transparency in your entire delivery chain.

Features

- Problem-free integration in applications via globally used standard interfaces
- Corresponds to the global standard ISO 18000-6C and EPC Gen2 Class1
- Flexible use due to a wide range of different combinations of data carriers and antennas
- Ranges up to 6 m and more
- Bulk capture for simultaneous scanning of many data carriers (tags)
- Suitable for attachment to traditional control systems via bus interfaces and higher level IT systems
- Complete tailored system solutions realizable
- Many accessories for integration into a variety of applications

Europe: 865-868 MHz		**BIS013P** BIS U-142-06/CA-M8-GY		
America/Asia: 902-928 MHz	**BIS0178** BIS U-142-A0/C1M-GY		**BIS013R** BIS U-142-07/CA-M8-GY	
Worldwide: 860-960 MHz				
Product Group	UHF (860...960 MHz)	UHF (860...960 MHz)	UHF (860...960 MHz)	
Working frequency	902…928 MHz	865…868 MHz	902…928 MHz	
Dimension	Ø 17.2 x 14 mm	Ø 22 x 26 mm	Ø 22 x 26 mm	
Memory type	EEPROM	EEPROM	EEPROM	
User data, read/write	512 Bit	512 Bit	512 Bit	
EPC memory, read/write	96 Bit	96 Bit	96 Bit	
TID memory, read-only	64 Bit	96 Bit	96 Bit	
Antenna type	Dipole	Dipole	Dipole	
Installation	on metal	on metal	on metal	
Storage temperature	-25...95 °C	-25...95 °C	-25...95 °C	
Storage temperature temporary	—	—	—	
Ambient temperature	-25...85 °C	-25...85 °C	-25...85 °C	
Housing material	PA 12, GF30	Steel, Data carrier: PA 12-GF30 gray, coated	Steel, Data carrier: PA 12-GF30 gray, coated	
IP rating	IP68	IP68	IP68	
Approval/Conformity	CE, WEEE, EAC	CE, WEEE, EAC	CE, WEEE, EAC	
Productview	Page 22	Page 22	Page 22	

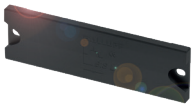
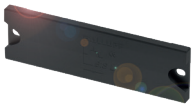

		BIS00NL BIS U-100-01/CA			
			BIS00RC BIS U-100-02/CA		
	BIS00WH BIS U-101-04/CA			**BIS0174** BIS U-103-M2/CAM	**BIS0172** BIS U-108-M2/CAM
	UHF (860...960 MHz)	UHF (860...960 MHz)	UHF (860...960 MHz)	UHF (860...960 MHz)	UHF (860...960 MHz)
	860…960 MHz	840…960 MHz	840…960 MHz	860…940 MHz	860…940 MHz
	51.5 x 6.4 x 51.5 mm	37.2 x 7 x 127 mm	37.2 x 7 x 127 mm	25 x 12.85 x 110 mm	15 x 12.5 x 80 mm
	EEPROM	EEPROM	EEPROM	EEPROM	EEPROM
	512 Bit	512 Bit	512 Bit	512 Bit	512 Bit
	240 Bit	96 Bit	96 Bit	128 Bit	128 Bit
	64 Bit	96 Bit	96 Bit	96 Bit	96 Bit
	Dipole	Dipole	Dipole	Dipole	Dipole
	metal-free (clear zone)	metal-free (clear zone)	metal-free (clear zone)	on metal	on metal
	-40...85 °C	-40...85 °C	-40...85 °C	-40...85 °C	-40...85 °C
	—	—	—	—	—
	-20...85 °C	-40...85 °C	-40...85 °C	-40...85 °C	-40...85 °C
	ABS	PA 12, GF30	PA 12, GF30	ABS	ABS
	IP68	IP67	IP67	IP68	IP68
	CE, WEEE, EAC	CE, WEEE, EAC	CE, WEEE, EAC	CE, RoHS, EAC, WEEE	CE, RoHS, EAC, WEEE
	Page 22	Page 22	Page 22	Page 22	Page 22

Europe: 865-868 MHz				
America/Asia: 902-928 MHz				
Worldwide: 860-960 MHz	**BIS0173** BIS U-109-M2/CAM	**BIS018F** BIS U-112-M4/CAA	**BIS018H** BIS U-113-M4/CAA	
Product Group	UHF (860...960 MHz)	UHF (860...960 MHz)	UHF (860...960 MHz)	
Working frequency	860…930 MHz	860…960 MHz	860…960 MHz	
Dimension	48 x 12.6 x 51 mm	29.3 x 19.2 x 66.2 mm	38.1 x 19 x 51.3 mm	
Memory type	EEPROM	EEPROM	EEPROM	
User data, read/write	512 Bit	0 Bit	0 Bit	
EPC memory, read/write	128 Bit	96 Bit	96 Bit	
TID memory, read-only	96 Bit	48 Bit	48 Bit	
Antenna type	Dipole	Dipole	Dipole	
Installation	on metal	metal-free (clear zone)	metal-free (clear zone)	
Storage temperature	-40...85 °C	-40...85 °C	-40...85 °C	
Storage temperature temporary	—	—	—	
Ambient temperature	-40...85 °C	-40...85 °C	-40...85 °C	
Housing material	ABS	PVDF	PVDF	
IP rating	IP68	IP67	IP67	
Approval/Conformity	CE, RoHS, EAC, WEEE	CE, WEEE	CE, WEEE	
Productview	Page 22	Page 22	Page 23	

		BIS01CJ BIS U-180-A0/C0M-HT			
			BIS01CK BIS U-180-A0/C1M-HT		
	BIS016M BIS U-111-M2/CAA			**BIS00WF** BIS U-101-04/CA-HT	**BIS00WC** BIS U-102-05/CA-HT
	UHF (860...960 MHz)	UHF (860...960 MHz)	UHF (860...960 MHz)	UHF (860...960 MHz)	UHF (860...960 MHz)
	860…960 MHz	866…868 MHz	902…928 MHz	860…960 MHz	860…960 MHz
	54 x 0.84 x 85.7 mm	5.95 x 1.3 x 57.1 mm	5.95 x 1.3 x 57.1 mm	51.5 x 6.4 x 51.5 mm	52 x 11.5 x 128 mm
	EEPROM	EEPROM	EEPROM	EEPROM	EEPROM
	512 Bit	512 Bit	512 Bit	512 Bit	512 Bit
	128 Bit	96 Bit	96 Bit	240 Bit	240 Bit
	96 Bit	96 Bit	96 Bit	64 Bit	64 Bit
	Dipole	Dipole	Dipole	Dipole	Dipole
	metal-free (clear zone)	on metal	on metal	metal-free (clear zone)	metal-free (clear zone)
	-25...50 °C	—	—	-40...85 °C	-40...85 °C
	—	-20...225 °C 1x12 h	-20...225 °C 1x12 h	220 °C 1x1000 h, 1500x30 min	220 °C 1x1000 h, 1500x30 min
	-25...50 °C	-20...85 °C	-20...85 °C	-40...85 °C	-40...85 °C
	PVC	Epoxy-resin/fiberglass, Flame-retarding	Epoxy-resin/fiberglass, Flame-retarding	PPS	PPS
	IP68	IP68	IP68	IP68	IP68
	CE, WEEE, EAC	CE, WEEE, EAC	CE, WEEE, EAC	CE, WEEE, EAC	CE, WEEE, EAC
	Page 23	Page 23	Page 23	Page 22	Page 23

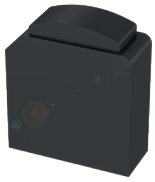
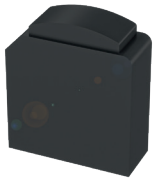
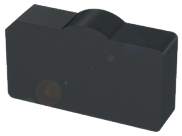

Europe: 865-868 MHz	**BIS01CF** BIS U-104-A0/C0M-HT		**BIS01CH** BIS U-105-A0/C0M-HT	
America/Asia: 902-928 MHz		**BIS01CM** BIS U-104-A0/C1M-HT		
Worldwide: 860-960 MHz				
Product Group	UHF (860...960 MHz)	UHF (860...960 MHz)	UHF (860...960 MHz)	
Working frequency	866…868 MHz	902…928 MHz	866…868 MHz	
Dimension	7.8 x 2.7 x 6.8 mm	7.8 x 2.7 x 6.8 mm	7.8 x 3.1 x 13.1 mm	
Memory type	EEPROM	EEPROM	EEPROM	
User data, read/write	512 Bit	512 Bit	512 Bit	
EPC memory, read/write	96 Bit	96 Bit	96 Bit	
TID memory, read-only	96 Bit	96 Bit	96 Bit	
Antenna type	Dipole	Dipole	Dipole	
Installation	on metal	on metal	on metal	
Storage temperature	—	—	—	
Storage temperature temporary	-20...235 °C 1x700 h	-20...235 °C 1x700 h	-20...235 °C 1x700 h	
Ambient temperature	-20...85 °C	-20...85 °C	-20...85 °C	
Housing material	Ceramic	Ceramic	Ceramic	
IP rating	IP68	IP68	IP68	
Approval/Conformity	CE, WEEE, EAC	CE, WEEE, EAC	CE, WEEE, EAC	
Productview	Page 23	Page 23	Page 23	

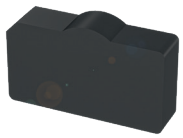

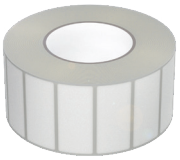
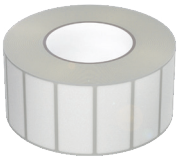

			BIS01AU BIS U-157-N9/C0M		
	BIS01CN BIS U-105-A0/C1M-HT			**BIS01AT** BIS U-157-N9/C1M	
		BIS0163 BIS U-150-N4/CAA			**BIS0166** BIS U-153-M0/CAA
	UHF (860...960 MHz)	UHF (860...960 MHz)	UHF (860...960 MHz)	UHF (860...960 MHz)	UHF (860...960 MHz)
	902…928 MHz	860…960 MHz	865…868 MHz	902…928 MHz	860…960 MHz
	7.8 x 3.1 x 13.1 mm	20 × 44.45 mm	22.5 x 1.65 x 50 mm	22.5 x 1.65 x 50 mm	9 × 113 mm
	EEPROM	EEPROM	EEPROM	EEPROM	EEPROM
	512 Bit	0 Bit	1024 Bit	1024 Bit	32 Bit
	96 Bit	128 Bit	448 Bit	448 Bit	128 Bit
	96 Bit	64 Bit	96 Bit	96 Bit	96 Bit
	Dipole	Dipole	Dipole	Dipole	Dipole
	on metal	metal-free (clear zone)	on metal	on metal	metal-free (clear zone)
	—	-20...80 °C	-30...85 °C	-30...85 °C	-20...80 °C
	-20...235 °C 1x700 h	—	—	—	—
	-20...85 °C	-20...80 °C	-30...85 °C	-30...85 °C	-20...80 °C
	Ceramic	Paper	PET	PET	Paper
	IP68	—	—	—	—
	CE, WEEE, EAC	CE, WEEE, EAC	CE, REACH regulation (EU), RoHS	CE, REACH regulation (EU), RoHS	CE, WEEE, EAC
	Page 23	Page 23	Page 23	Page 23	Page 24

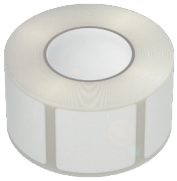
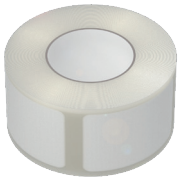

Europe: 865-868 MHz				
America/Asia: 902-928 MHz				
Worldwide: 860-960 MHz	**BIS0167** BIS U-154-M0/CAA	**BIS0169** BIS U-156-M0/CAA	**BIS0164** BIS U-151-M2/CAA	
Product Group	UHF (860...960 MHz)	UHF (860...960 MHz)	UHF (860...960 MHz)	
Working frequency	860…960 MHz	860…960 MHz	860…960 MHz	
Dimension	15 × 97 mm	53 × 53 mm	54 × 34 mm	
Memory type	EEPROM	EEPROM	EEPROM	
User data, read/write	32 Bit	32 Bit	512 Bit	
EPC memory, read/write	128 Bit	128 Bit	128 Bit	
TID memory, read-only	96 Bit	96 Bit	96 Bit	
Antenna type	Dipole	Dipole	Dipole	
Installation	metal-free (clear zone)	metal-free (clear zone)	metal-free (clear zone)	
Storage temperature	-40...85 °C	-40...85 °C	-40...85 °C	
Storage temperature temporary	—	—	—	
Ambient temperature	-40...85 °C	-40...85 °C	-40...85 °C	
Housing material	Paper	Paper	Paper	
IP rating	—	—	—	
Approval/Conformity	CE, WEEE, EAC	CE, WEEE, EAC	CE, WEEE, EAC	
Productview	Page 24	Page 24	Page 24	

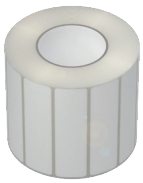

		BIS016E BIS U-158-A0/C0M-HT			
			BIS016F BIS U-158-A0/C1M-HT		
	BIS0168 BIS U-155-M2/CAA			**BIS016H** BIS U-159-M2/CAA	
	UHF (860...960 MHz)	UHF (860...960 MHz)	UHF (860...960 MHz)	UHF (860...960 MHz)	
	860…960 MHz	865…868 MHz	902…928 MHz	850…960 MHz	
	27 × 97 mm	25 x 1.65 x 88 mm	25 x 1.65 x 88 mm	23 x 1 x 100 mm	
	EEPROM	EEPROM	EEPROM	EEPROM	
	512 Bit	512 Bit	512 Bit	512 Bit	
	128 Bit	96 Bit	96 Bit	128 Bit	
	96 Bit	96 Bit	96 Bit	96 Bit	
	Dipole	Dipole	Dipole	Dipole	
	metal-free (clear zone)	on metal	on metal	metal-free (clear zone)	
	-40...85 °C	-25...95 °C	-25...95 °C	-40...85 °C	
	—	160 °C 3x30 min	160 °C 3x30 min	—	
	-40...85 °C	-30...70 °C	-30...70 °C	-25...70 °C	
	Paper	PEN	PEN	PET	
	—	IP67	IP67	IP68	
	CE, WEEE, EAC	CE, REACH regulation (EU), RoHS, WEEE	CE, REACH regulation (EU), RoHS, WEEE	CE, REACH regulation (EU), RoHS, WEEE	
	Page 24	Page 24	Page 24	Page 24	

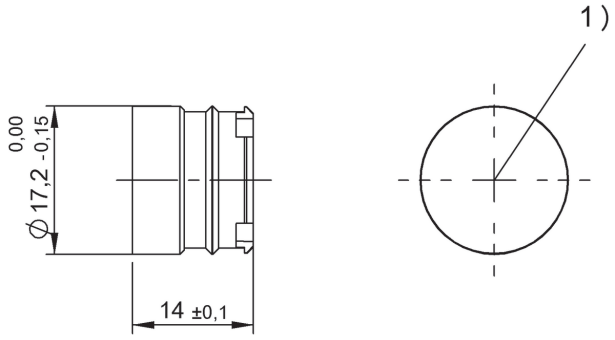

1) Sensing surface

BIS0178

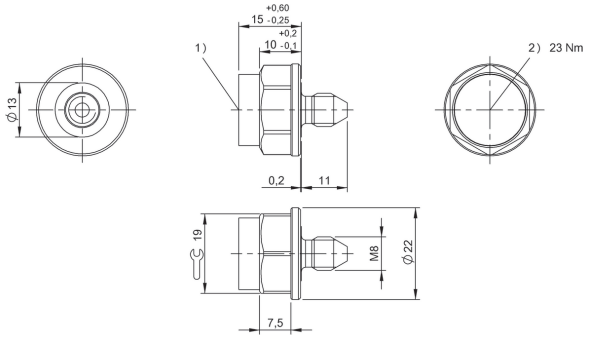

1) Sensing surface, 2) Tightening torque

BIS013P, BIS013R

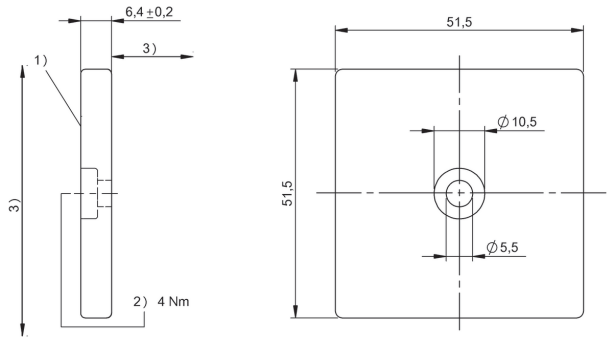

1) Sensing surface, 2) Tightening torque, 3) see R/W head table

BIS00WH, BIS00WF

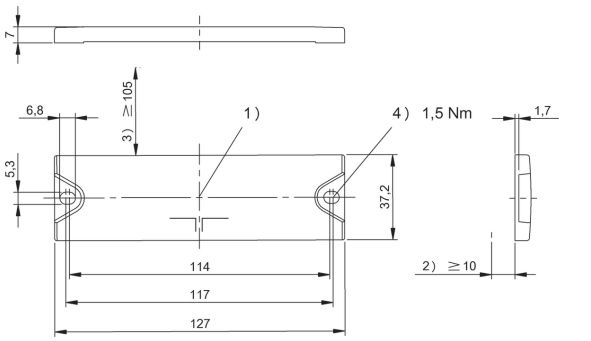

1) Sensing surface, 2) Clear zone, 3) Clear zone surrounding, 4) Tightening torque

BIS00NL, BIS00RC

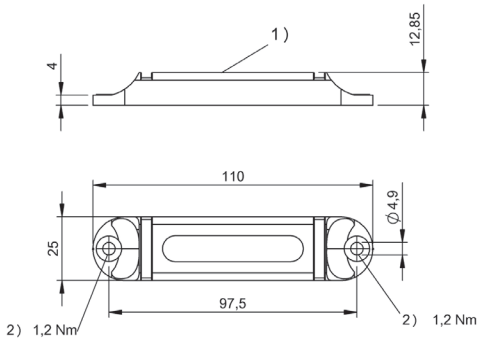

1) Sensing surface, 2) Tightening torque

BIS0174

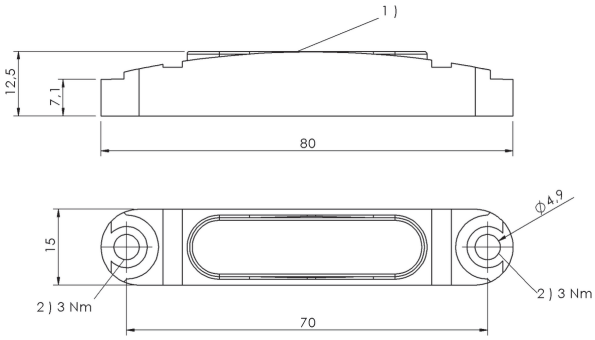

1) Sensing surface, 2) Tightening torque

BIS0172

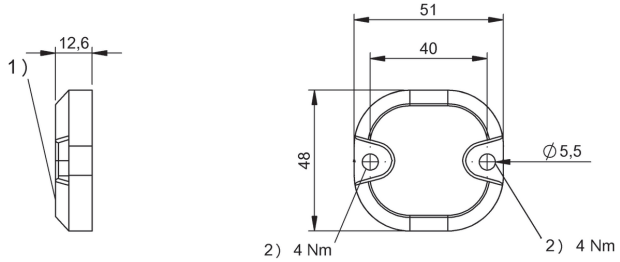

1) Sensing surface, 2) Tightening torque

BIS0173

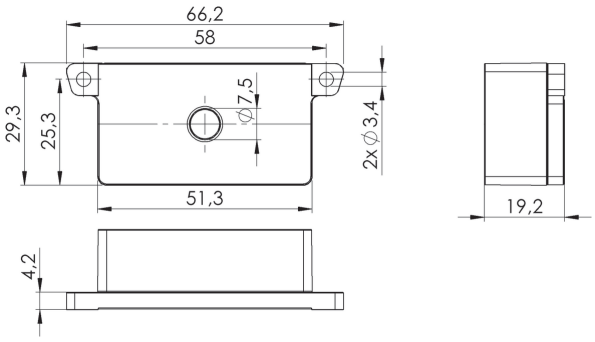

BIS018F

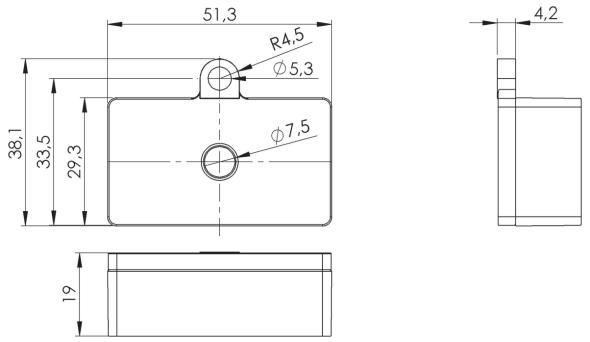

BIS018H

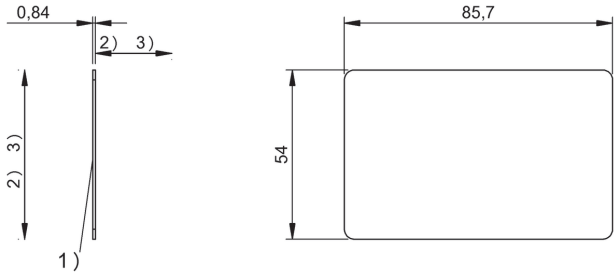

1) Sensing surface, 2) Clear zone, 3) see corresponding R/W head

BIS016M

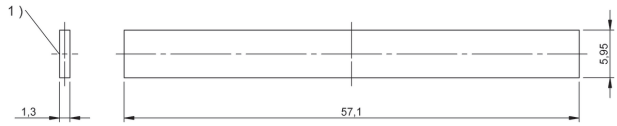

1) Sensing surface

BIS01CJ, BIS01CK

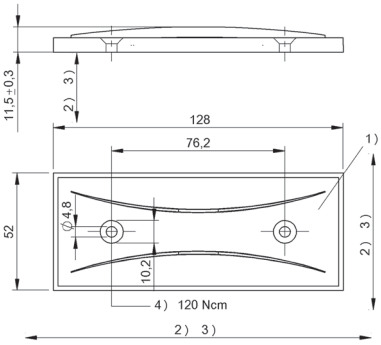

1) Sensing surface, 2) Clear zone, 3) see corresponding R/W head, 4) Tightening torque

BIS00WC

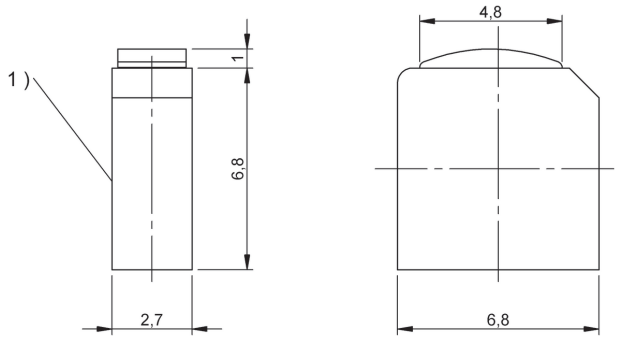

1) Sensing surface

BIS01CF, BIS01CM

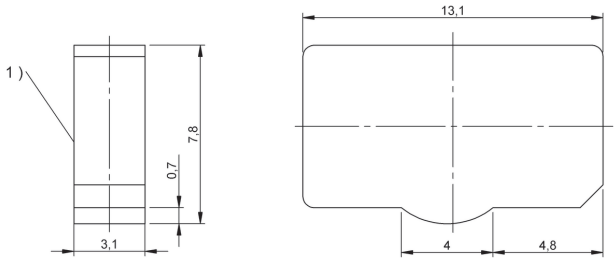

1) Sensing surface

BIS01CH, BIS01CN

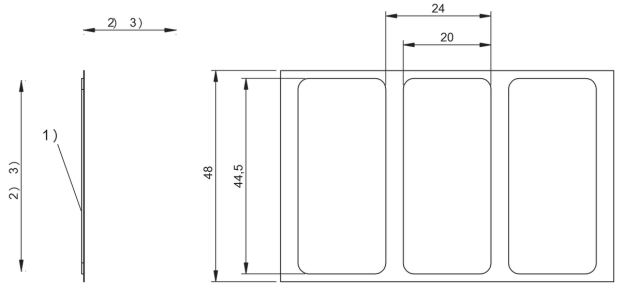

1) Sensing surface, 2) Clear zone, 3) see corresponding R/W head

BIS0163

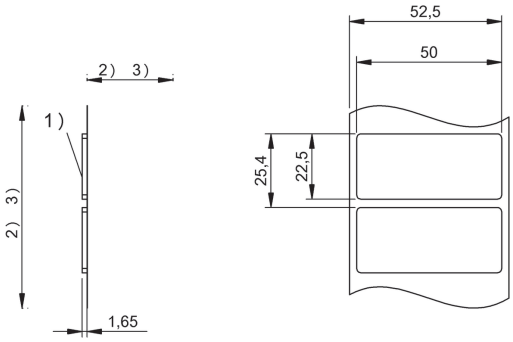

1) Sensing surface, 2) Clear zone, 3) see corresponding R/W head

BIS01AU, BIS01AT

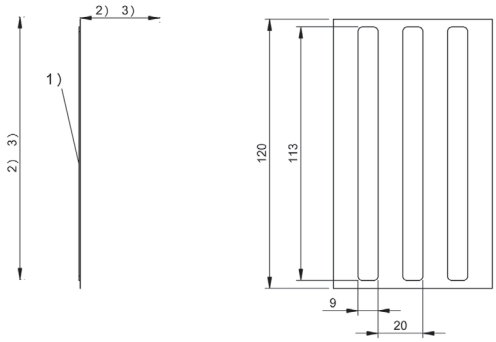

1) Sensing surface, 2) Clear zone, 3) see corresponding R/W head

BIS0166

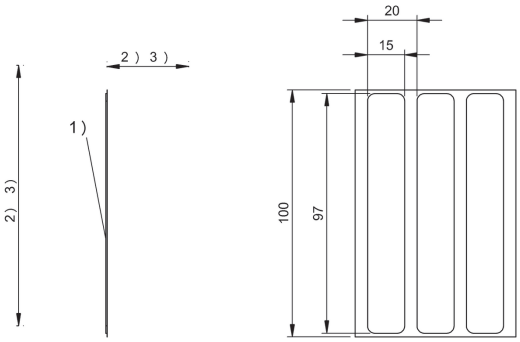

1) Sensing surface, 2) Clear zone, 3) see corresponding R/W head

BIS0167

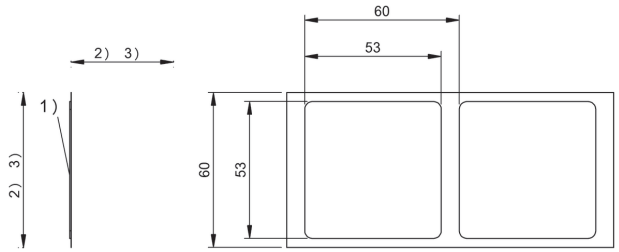

1) Sensing surface, 2) Clear zone, 3) see corresponding R/W head

BIS0169

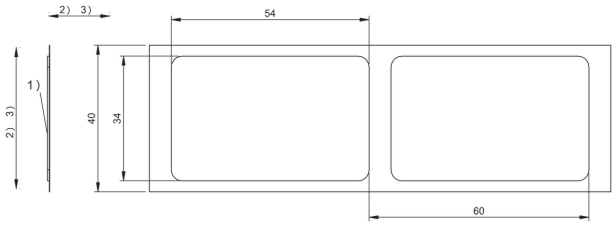

1) Sensing surface, 2) Clear zone, 3) see corresponding R/W head

BIS0164

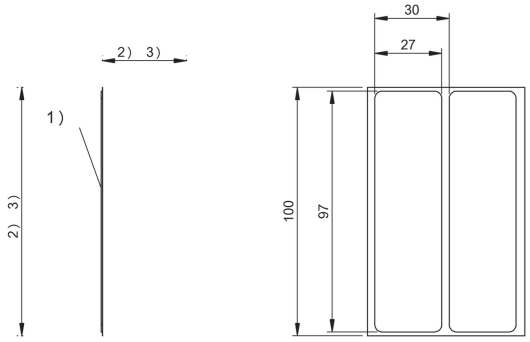

1) Sensing surface, 2) Clear zone, 3) see corresponding R/W head

BIS0168

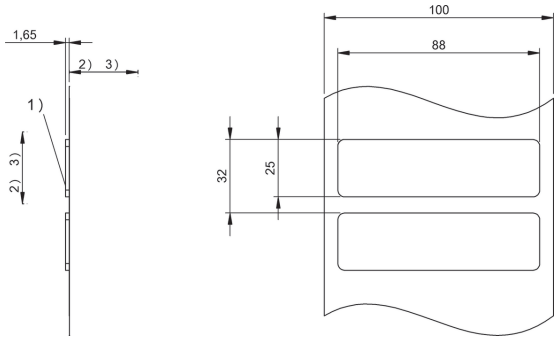

1) Sensing surface, 2) Clear zone, 3) see corresponding R/W head

BIS016E

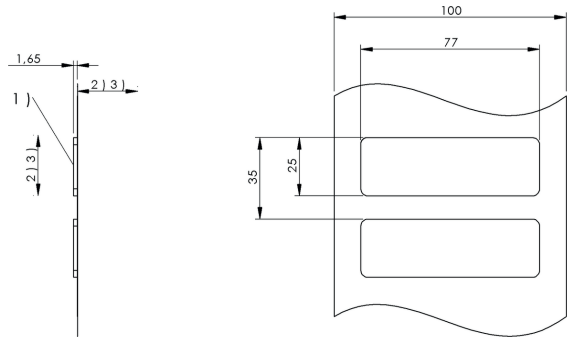

1) Sensing surface, 2) Clear zone, 3) see corresponding R/W head

BIS016F

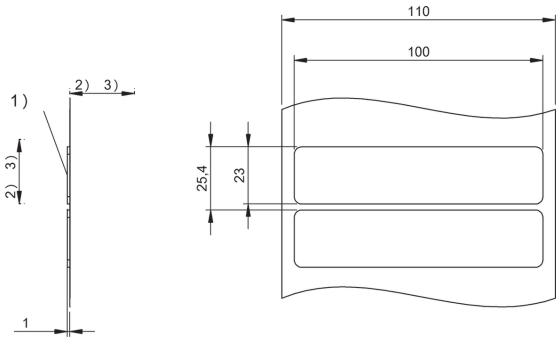

1) Sensing surface, 2) Clear zone, 3) see corresponding R/W head

BIS016H

Europe: 865...868 MHz	**BIS015Z** BIS VU-320-C0-S4		
USA/Canada/Mexico: 902...928 MHz		**BIS015Y** BIS VU-320-C1-S4	
China: 920.5...924.5 MHz			
South Korea: 917...921 MHz			
Japan: 916.8...92.4 MHz			
Australia: 920.25...925.75 MHz			
Product Group	UHF (860...960 MHz)	UHF (860...960 MHz)	
Radio license	Europe	USA, Canada, Mexico	
Dimension	130 x 50.5 x 130 mm	130 x 50.5 x 130 mm	
Antenna type	Patch	Patch	
Polarization	circular	circular	
Output power adjustable	5 dBm…24 dBm (3.2 mW…250 mW)	7 dBm…26 dBm (5 mW…400 mW)	
Connection	M12x1-Male, 4-pole, A-coded	M12x1-Male, 4-pole, A-coded	
Housing material	PC ABS, zinc, die-cast, (connector)	PC ABS, zinc, die-cast, (connector)	
Interface	RS485	RS485	
Operating voltage Ub	24 V DC LPS Class 2	24 V DC LPS Class 2	
Ambient temperature	-20...55 °C	-20...55 °C	
Protection degree	IP67	IP67	
Approval/Conformity	CE, ETSI EN 302 208, UL Listed	FCC Part 15, IC RSS-210, UL Listed	
Productview	Page 30	Page 30	

	BIS018Z BIS VU-320-C2-S4			
		BIS0190 BIS VU-320-C4-S4		
			BIS0191 BIS VU-320-C5-S4	
				BIS0192 BIS VU-320-C7-S4
	UHF (860...960 MHz)	UHF (860...960 MHz)	UHF (860...960 MHz)	UHF (860...960 MHz)
	China	South Korea	Japan	Australia
	130 x 50.5 x 130 mm	130 x 50.5 x 130 mm	130 x 50.5 x 130 mm	130 x 50.5 x 130 mm
	Patch	Patch	Patch	Patch
	circular	circular	circular	circular
	5 dBm…24 dBm (3.2 mW…250 mW)	7 dBm…26 dBm (5 mW…400 mW)	7 dBm…25 dBm (5 mW…320 mW)	7 dBm…26 dBm (5 mW…400 mW)
	M12x1-Male, 4-pole, A-coded	M12x1-Male, 4-pole, A-coded	M12x1-Male, 4-pole, A-coded	M12x1-Male, 4-pole, A-coded
	PC ABS, zinc, die-cast, (connector)	PC ABS, zinc, die-cast, (connector)	PC ABS, zinc, die-cast, (connector)	PC ABS, zinc, die-cast, (connector)
	RS485	RS485	RS485	RS485
	24 V DC LPS Class 2	24 V DC LPS Class 2	24 V DC LPS Class 2	24 V DC LPS Class 2
	-20...55 °C	-20...55 °C	-20...55 °C	-20...55 °C
	IP67	IP67	IP67	IP67
	CMIIT-Radio Transmiss. Equipm., UL Listed	KC, UL Listed	ARIB T106, MIC Specified Radio Equipment, UL Listed	AS/NZS 4268, UL Listed
	Page 30	Page 30	Page 30	Page 30

Europe: 865...868 MHz	**BIS00P0** BIS U-301-C0-TNCB		
America/Asia: 902...928 MHz		**BIS00TY** BIS U-301-C1-TNCB	
Product Group	UHF (860...960 MHz)	UHF (860...960 MHz)	
Working frequency	865…868 MHz	902…928 MHz	
Dimension	133 x 18.4 x 133 mm	133 x 18.4 x 133 mm	
Antenna type	Patch	Patch	
Polarization	circular	circular	
Connection	—	—	
Housing material	PC	PC	
Ambient temperature	-30...70 °C	-30...70 °C	
Protection degree	IP67	IP67	
Approval/Conformity	—	—	
Productview	Page 30	Page 30	

	BIS01AW BIS U-303-C0-TNCB			
		BIS01AY BIS U-303-C1-TNCB		
	UHF (860...960 MHz)	UHF (860...960 MHz)		
	865…868 MHz	902…928 MHz		
	300 x 49 x 300 mm	300 x 49 x 300 mm		
	Patch	—		
	right hand circular	right hand circular		
	TNC-Female	TNC-Female		
	Aluminum, Antenna hood: Polymer blend	Aluminum, Antenna hood: Polymer blend		
	-20...55 °C	-20...55 °C		
	IP67	IP67		
	CE, WEEE	FCC, WEEE		
	Page 31	Page 31		

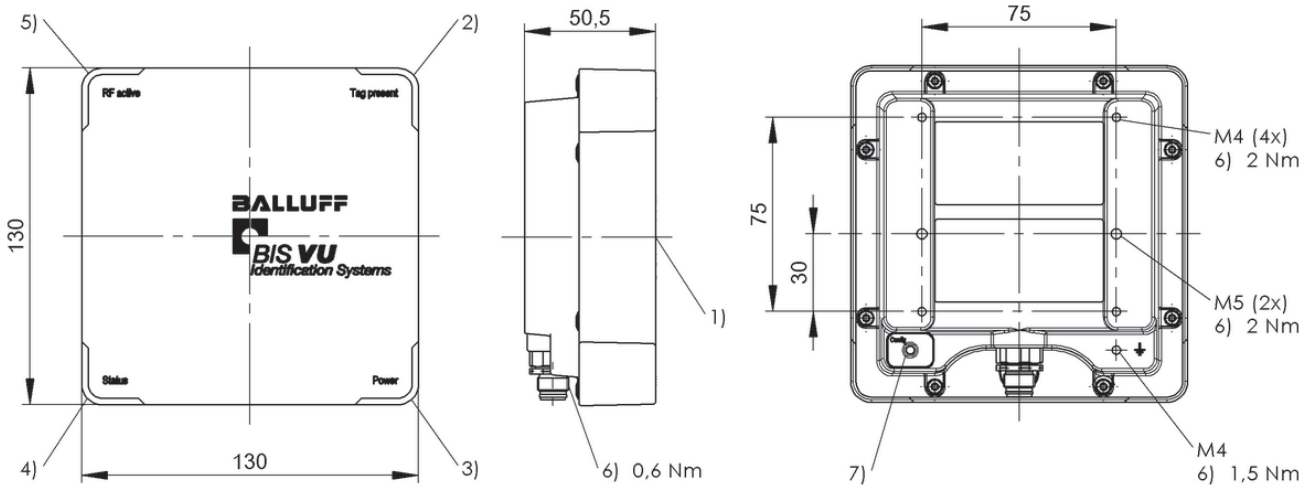

1) Sensing surface, 2) LED (Tag present), 3) LED (Power), 4) LED (Status), 5) LED (RF active), 6) Tightening torque, 7) Button (Config)

BIS015Z, BIS015Y, BIS018Z, BIS0190, BIS0191, BIS0192

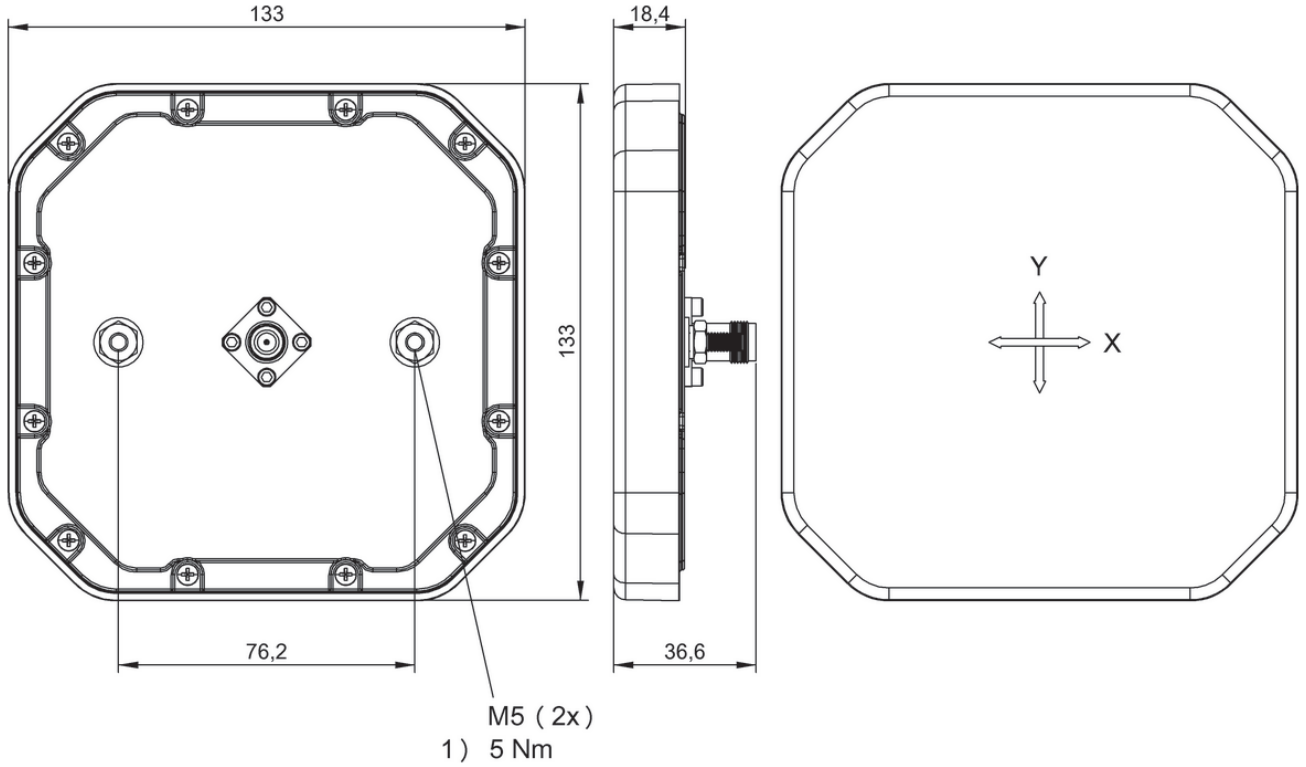

1) Tightening torque

BIS00P0, BIS00TY

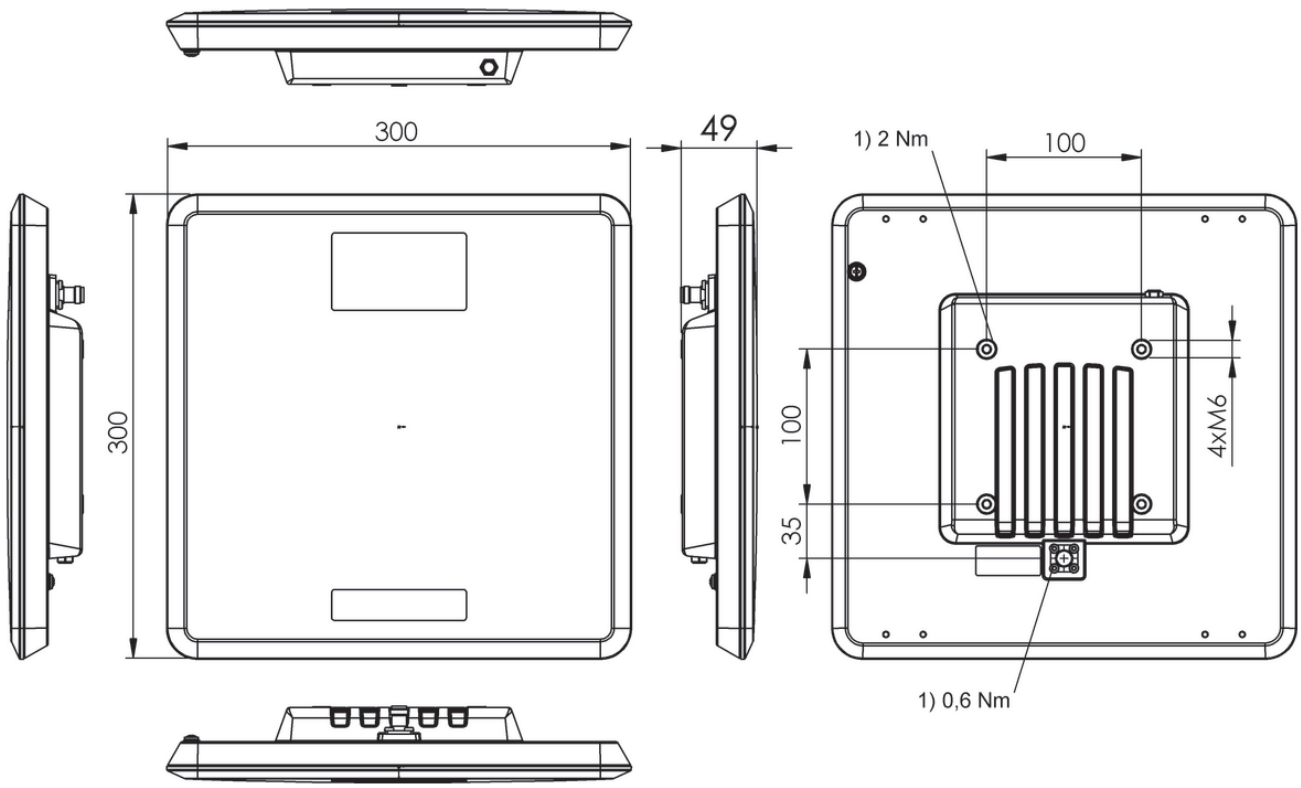

1) Tightening torque

BIS01AW, BIS01AY

Profibus DP Slave galvanically isolated	**BIS00T3** BIS V-6102-019-C001	
Ethernet/IP		
Product Group	Multi-Frequency Processor	
Working frequency	865…868 MHz, 902…928 MHz, 920.5…924.5 MHz, 917…921 MHz, 916.8…920.4 MHz, 920.25…925.75 MHz	
Interface	Profibus DP Slave galvanically isolated	
Supported RFID technologies	LF 125 kHz (BIS VL), HF 13.56 MHz (BIS VM), UHF 860/960 MHz (BIS VU)	
Number of connectable R/W heads / antennas	4	
Output power adjustable	—	
Operating voltage Ub	24 V DC LPS Class 2	
Housing material	Zinc, Die casting	
Ambient temperature	0...60 °C	
IP rating	IP65, with connector	
Approval/Conformity	CE, EAC, cULus, WEEE	
Productview	Page 50	

	BIS012E BIS V-6102-019-C101		
		BIS012F BIS V-6106-034-C002	BIS0122 BIS V-6106-034-C004
	Multi-Frequency Processor	Multi-Frequency Processor	Multi-Frequency Processor
	865…868 MHz, 902…928 MHz, 920.5…924.5 MHz, 917…921 MHz, 916.8…920.4 MHz, 920.25…925.75 MHz	865…868 MHz, 902…928 MHz, 920.5…924.5 MHz, 917…921 MHz, 916.8…920.4 MHz, 920.25…925.75 MHz	865…868 MHz, 902…928 MHz, 920.5…924.5 MHz, 917…921 MHz, 916.8…920.4 MHz, 920.25…925.75 MHz
	Profibus DP Slave galvanically isolated	Ethernet/IP	Ethernet/IP
	LF 125 kHz (BIS VL), LF 70/455 kHz (BIS C), HF 13.56 MHz (BIS VM), UHF 860/960 MHz (BIS VU)	LF 125 kHz (BIS VL), HF 13.56 MHz (BIS VM), UHF 860/960 MHz (BIS VU)	LF 125 kHz (BIS VL), HF 13.56 MHz (BIS VM), UHF 860/960 MHz (BIS VU)
	4	4	4
	—	—	—
	24 V DC LPS Class 2	24 V DC LPS Class 2	24 V DC LPS Class 2
	Zinc, Die casting	Zinc, Die casting	Zinc, Die casting
	0...60 °C	0...60 °C	0...60 °C
	IP65, with connector	IP65, with connector	IP65, with connector
	CE, EAC, cULus, WEEE	CE, EAC, cULus, WEEE	CE, EAC, cULus, WEEE
	Page 50	Page 50	Page 51

Ethernet/IP	**BIS014C** BIS V-6106-034-C102	
Product Group	Multi-Frequency Processor	
Working frequency	865…868 MHz, 902…928 MHz, 920.5…924.5 MHz, 917…921 MHz, 916.8…920.4 MHz, 920.25…925.75 MHz	
Interface	Ethernet/IP	
Supported RFID technologies	LF 125 kHz (BIS VL), LF 70/455 kHz (BIS C), HF 13.56 MHz (BIS VM), UHF 860/960 MHz (BIS VU)	
Number of connectable R/W heads / antennas	4	
Output power adjustable	—	
Operating voltage Ub	24 V DC LPS Class 2	
Housing material	Zinc, Die casting	
Ambient temperature	0...60 °C	
IP rating	IP65, with connector	
Approval/Conformity	CE, EAC, cULus, WEEE	
Productview	Page 50	

	BIS0146 BIS V-6106-034-C104	BIS0186 BIS V-6107-039-C005	BIS018J BIS V-6107-039-C006
	Multi-Frequency Processor	Multi-Frequency Processor	Multi-Frequency Processor
	865…868 MHz, 902…928 MHz, 920.5…924.5 MHz, 917…921 MHz, 916.8…920.4 MHz, 920.25…925.75 MHz	865…868 MHz, 902…928 MHz, 920.5…924.5 MHz, 917…921 MHz, 916.8…920.4 MHz, 920.25…925.75 MHz	865…868 MHz, 902…928 MHz, 920.5…924.5 MHz, 917…921 MHz, 916.8…920.4 MHz, 920.25…925.75 MHz
	Ethernet/IP	Ethernet TCP/IP, USB	Ethernet TCP/IP, USB
	LF 125 kHz (BIS VL), LF 70/455 kHz (BIS C), HF 13.56 MHz (BIS VM), UHF 860/960 MHz (BIS VU)	LF 125 kHz (BIS VL), HF 13.56 MHz (BIS VM), UHF 860/960 MHz (BIS VU)	LF 125 kHz (BIS VL), HF 13.56 MHz (BIS VM), UHF 860/960 MHz (BIS VU)
	4	4	4
	—	—	—
	24 V DC LPS Class 2	24 V DC LPS Class 2	24 V DC LPS Class 2
	Zinc, Die casting	Zinc, Die casting	Zinc, Die casting
	0...60 °C	0...60 °C	0...60 °C
	IP65, with connector	IP65, with connector	IP65, with connector
	CE, EAC, cULus, WEEE	CE, EAC, cULus, WEEE	CE, EAC, cULus, WEEE
	Page 51	Page 51	Page 52

TCP/IP, USB	**BIS01AA** BIS V-6107-039-C007	
Product Group	Multi-Frequency Processor	
Working frequency	865…868 MHz, 902…928 MHz, 920.5…924.5 MHz, 917…921 MHz, 916.8…920.4 MHz, 920.25…925.75 MHz	
Interface	TCP/IP, USB	
Supported RFID technologies	LF 125 kHz (BIS VL), HF 13.56 MHz (BIS VM), UHF 860/960 MHz (BIS VU)	
Number of connectable R/W heads / antennas	4	
Output power adjustable	—	
Operating voltage Ub	24 V DC LPS Class 2	
Housing material	Zinc, Die casting	
Ambient temperature	0...60 °C	
IP rating	IP65, with connector	
Approval/Conformity	CE, EAC, cULus, WEEE	
Productview	Page 52	

	BIS0187 BIS V-6107-039-C105	BIS018K BIS V-6107-039-C106	BIS01AC BIS V-6107-039-C107
	Multi-Frequency Processor	Multi-Frequency Processor	Multi-Frequency Processor
	865…868 MHz, 902…928 MHz, 920.5…924.5 MHz, 917…921 MHz, 916.8…920.4 MHz, 920.25…925.75 MHz	865…868 MHz, 902…928 MHz, 920.5…924.5 MHz, 917…921 MHz, 916.8…920.4 MHz, 920.25…925.75 MHz	865…868 MHz, 902…928 MHz, 920.5…924.5 MHz, 917…921 MHz, 916.8…920.4 MHz, 920.25…925.75 MHz
	Ethernet TCP/IP, USB	Ethernet TCP/IP, USB	TCP/IP, USB
	LF 125 kHz (BIS VL), LF 70/455 kHz (BIS C), HF 13.56 MHz (BIS VM), UHF 860/960 MHz (BIS VU)	LF 125 kHz (BIS VL), LF 70/455 kHz (BIS C), HF 13.56 MHz (BIS VM), UHF 860/960 MHz (BIS VU)	LF 125 kHz (BIS VL), LF 70/455 kHz (BIS C), HF 13.56 MHz (BIS VM), UHF 860/960 MHz (BIS VU)
	4	4	4
	—	—	—
	24 V DC LPS Class 2	24 V DC LPS Class 2	24 V DC LPS Class 2
	Zinc, Die casting	Zinc, Die casting	Zinc, Die casting
	0...60 °C	0...60 °C	0...60 °C
	IP65, with connector	IP65, with connector	IP65, with connector
	CE, EAC, cULus, WEEE	CE, EAC, cULus, WEEE	CE, EAC, cULus, WEEE
	Page 51	Page 52	Page 52

Profinet I/O (IRT), Profinet I/O (IRT) 2-port switch	**BIS013U** BIS V-6108-048-C002	
Product Group	Multi-Frequency Processor	
Working frequency	865…868 MHz, 902…928 MHz, 920.5…924.5 MHz, 917…921 MHz, 916.8…920.4 MHz, 920.25…925.75 MHz	
Interface	Profinet I/O (IRT), Profinet I/O (IRT) 2-port switch	
Supported RFID technologies	LF 125 kHz (BIS VL), HF 13.56 MHz (BIS VM), UHF 860/960 MHz (BIS VU)	
Number of connectable R/W heads / antennas	4	
Output power adjustable	—	
Operating voltage Ub	24 V DC LPS Class 2	
Housing material	Zinc, Die casting	
Ambient temperature	0...60 °C	
IP rating	IP65, with connector	
Approval/Conformity	CE, EAC, cULus, WEEE	
Productview	Page 53	

	BIS01AE BIS V-6108-048-C007	BIS013W BIS V-6108-048-C102	BIS01AF BIS V-6108-048-C107
	Multi-Frequency Processor	Multi-Frequency Processor	Multi-Frequency Processor
	865…868 MHz, 902…928 MHz, 920.5…924.5 MHz, 917…921 MHz, 916.8…920.4 MHz, 920.25…925.75 MHz	865…868 MHz, 902…928 MHz, 920.5…924.5 MHz, 917…921 MHz, 916.8…920.4 MHz, 920.25…925.75 MHz	865…868 MHz, 902…928 MHz, 920.5…924.5 MHz, 917…921 MHz, 916.8…920.4 MHz, 920.25…925.75 MHz
	Profinet I/O (IRT), Profinet I/O (IRT) 2-port switch	Profinet I/O (IRT), Profinet I/O (IRT) 2-port switch	Profinet I/O (IRT), Profinet I/O (IRT) 2-port switch
	LF 125 kHz (BIS VL), HF 13.56 MHz (BIS VM), UHF 860/960 MHz (BIS VU)	LF 125 kHz (BIS VL), LF 70/455 kHz (BIS C), HF 13.56 MHz (BIS VM), UHF 860/960 MHz (BIS VU)	LF 125 kHz (BIS VL), LF 70/455 kHz (BIS C), HF 13.56 MHz (BIS VM), UHF 860/960 MHz (BIS VU)
	4	4	4
	—	—	—
	24 V DC LPS Class 2	24 V DC LPS Class 2	24 V DC LPS Class 2
	Zinc, Die casting	Zinc, Die casting	Zinc, Die casting
	0...60 °C	0...60 °C	0...60 °C
	IP65, with connector	IP65, with connector	IP65, with connector
	CE, EAC, cULus, WEEE	CE, EAC, cULus, WEEE	CE, EAC, cULus, WEEE
	Page 53	Page 53	Page 53

Do you need more details? Our Product Finder at www.balluff.com provides you with product-specific information, including technical drawings, data sheets, user guides and more for each individual product. All items are available for download.

EtherCAT	**BIS00U9** BIS V-6110-063-C002	
Product Group	Multi-Frequency Processor	
Working frequency	865…868 MHz, 902…928 MHz, 920.5…924.5 MHz, 917…921 MHz, 916.8…920.4 MHz, 920.25…925.75 MHz	
Interface	EtherCAT	
Supported RFID technologies	LF 125 kHz (BIS VL), HF 13.56 MHz (BIS VM), UHF 860/960 MHz (BIS VU)	
Number of connectable R/W heads / antennas	4	
Output power adjustable	—	
Operating voltage Ub	24 V DC LPS Class 2	
Housing material	Zinc, Die casting	
Ambient temperature	0...60 °C	
IP rating	IP65, with connector	
Approval/Conformity	CE, EAC, cULus, WEEE	
Productview	Page 54	

	BIS0147 BIS V-6110-063-C102		
	Multi-Frequency Processor		
	865…868 MHz, 902…928 MHz, 920.5…924.5 MHz, 917…921 MHz, 916.8…920.4 MHz, 920.25…925.75 MHz		
	EtherCAT		
	LF 125 kHz (BIS VL), LF 70/455 kHz (BIS C), HF 13.56 MHz (BIS VM), UHF 860/960 MHz (BIS VU)		
	4		
	—		
	24 V DC LPS Class 2		
	Zinc, Die casting		
	0...60 °C		
	IP65, with connector		
	CE, EAC, cULus, WEEE		
	Page 54		

Europe: 865...868 MHz	**BIS00M7** BIS U-6020-053-104-00-ST26	
USA/Canada/Mexico: 902...928 MHz		
China: 920.5...924.5 MHz		
Product Group	UHF (860...960 MHz)	
Working frequency	865…868 MHz	
Interface	RS232	
Supported RFID technologies	UHF 860/960 MHz (BIS U)	
Number of connectable R/W heads / antennas	4	
Output power adjustable	17 dBm…33 dBm (50 mW…2 W)	
Operating voltage Ub	19.2...28.8 VDC	
Housing material	Steel, Aluminum, coated	
Ambient temperature	-20...55 °C	
IP rating	IP65, with connector	
Approval/Conformity	CE, ETSI EN 302 208, EAC, WEEE	
Productview	Page 55	

	BIS013J BIS U-6026-034-114-06-ST35		
		BIS018N BIS U-6026-034-124-06-ST35	**BIS012R** BIS U-6027-060-124-06-ST27
	UHF (860...960 MHz)	UHF (860...960 MHz)	UHF (860...960 MHz)
	902…928 MHz	920.5…924.5 MHz	920.5…924.5 MHz
	EtherNet/IP galvanically isolated	EtherNet/IP galvanically isolated	Ethernet TCP/IP
	UHF 860/960 MHz (BIS U)	UHF 860/960 MHz (BIS U)	UHF 860/960 MHz (BIS U)
	4	4	4
	17 dBm…30 dBm (50 mW…1 W)	17 dBm...31.5 dBm (50 mW...1.4 W)	17 dBm...31.5 dBm (50 mW...1.4 W)
	19.2...28.8 VDC	19.2...28.8 VDC	19.2...28.8 VDC
	Steel, Aluminum, coated	Steel, Aluminum, coated	Steel, Aluminum, coated
	-20...55 °C	-20...55 °C	-20...55 °C
	IP65, with connector	IP65, with connector	IP65, with connector
	FCC Part 15, IC RSS-247, WEEE, cULus, EAC	CMIIT-Radio Transmiss. Equipm., WEEE, cULus	CMIIT-Radio Transmiss. Equipm., WEEE, cULus
	Page 55	Page 55	Page 56

Europe: 865...868 MHz		
USA/Canada: 902...928 MHz		
South Korea: 917...921 MHz	**BIS00UR** BIS U-6027-060-144-06-ST27	
Australia: 920.25...925.75 MHz		
Product Group	UHF (860...960 MHz)	
Working frequency	917…921 MHz	
Interface	Ethernet TCP/IP	
Supported RFID technologies	UHF 860/960 MHz (BIS U)	
Number of connectable R/W heads / antennas	4	
Output power adjustable	17 dBm…30 dBm (50 mW…1 W)	
Operating voltage Ub	19.2...28.8 VDC	
Housing material	Steel, Aluminum, coated	
Ambient temperature	-20...55 °C	
IP rating	IP65, with connector	
Approval/Conformity	KC, WEEE, EAC	
Productview	Page 56	

		BIS00ZU BIS U-6028-048-104-06-ST28	
			BIS00ZW BIS U-6028-048-114-06-ST28
	BIS014H BIS U-6027-060-174-06-ST27		
	UHF (860...960 MHz)	UHF (860...960 MHz)	UHF (860...960 MHz)
	920.25…925.75 MHz	865…868 MHz	902…928 MHz
	Ethernet TCP/IP	Profinet galvanically isolated	Profinet galvanically isolated
	UHF 860/960 MHz (BIS U)	UHF 860/960 MHz (BIS U)	UHF 860/960 MHz (BIS U)
	4	4	4
	17 dBm…30 dBm (50 mW…1 W)	17 dBm...31.5 dBm (50 mW...1.4 W)	17 dBm…30 dBm (50 mW…1 W)
	19.2...28.8 VDC	19.2...28.8 VDC	19.2...28.8 VDC
	Steel, Aluminum, coated	Steel, Aluminum, coated	Steel, Aluminum, coated
	-20...55 °C	-20...55 °C	-20...55 °C
	IP65, with connector	IP65, with connector	IP65, with connector
	AS/NZS 4268, WEEE	CE, ETSI EN 302 208, WEEE, EAC, cULus	FCC Part 15, IC RSS-247, WEEE, cULus, EAC
	Page 56	Page 57	Page 57

Europe: 865...868 MHz		
USA/Canada: 902...928 MHz		
Brazil: 915...928 MHz		
China: 920.5...924.5 MHz	**BIS017J** BIS U-6028-048-124-06-ST28	
Product Group	UHF (860...960 MHz)	
Working frequency	920.5…924.5 MHz	
Interface	Profinet galvanically isolated	
Supported RFID technologies	UHF 860/960 MHz (BIS U)	
Number of connectable R/W heads / antennas	4	
Output power adjustable	17 dBm...31.5 dBm (50 mW...1.4 W)	
Operating voltage Ub	19.2...28.8 VDC	
Housing material	Steel, Aluminum, coated	
Ambient temperature	-20...55 °C	
IP rating	IP65, with connector	
Approval/Conformity	CMIIT-Radio Transmiss. Equipm., cULus, WEEE, EAC	
Productview	Page 57	

		BIS0193 BIS U-6127-081-104-06-ST36	
			BIS0194 BIS U-6127-081-114-06-ST36
	BIS0152 BIS U-6028-048-134-06-ST28		
	UHF (860...960 MHz)	UHF (860...960 MHz)	UHF (860...960 MHz)
	915.25…927.75 MHz	865…868 MHz	902…928 MHz
	Profinet galvanically isolated	Ethernet TCP/IP	Ethernet TCP/IP
	UHF 860/960 MHz (BIS U)	UHF 860/960 MHz (BIS U)	UHF 860/960 MHz (BIS U)
	4	4	4
	17 dBm…30 dBm (50 mW…1 W)	7 dBm…30 dBm (5 mW…1 W)	7 dBm…30 dBm (5 mW…1 W)
	19.2...28.8 VDC	19.2...28.8 VDC LPS Class 2	19.2...28.8 VDC LPS Class 2
	Steel, Aluminum, coated	Stainless steel, Aluminum, coated	Stainless steel, Aluminum, coated
	-20...55 °C	-20...55 °C	-20...55 °C
	IP65, with connector	IP65, with connector	IP65, with connector
	Anatel 442/2006, Anatel 506/2008, WEEE	CE, ETSI EN 302 208, UL Listed, EAC, WEEE	FCC Part 15, IC RSS-210, UL Listed, WEEE, EAC
	Page 57	Page 58	Page 58

Europe: 865...868 MHz		
USA: 902...928 MHz	**BIS00Z3** BIS U-620-068-111-00-S115	
Product Group	UHF (860...960 MHz)	
Working frequency	902…928 MHz	
Interface	RS232	
Supported RFID technologies	UHF 860/960 MHz (BIS U)	
Number of connectable R/W heads / antennas	1	
Output power adjustable	10 dBm…27 dBm (10 mW…500 mW)	
Operating voltage Ub	19.2...28.8 VDC	
Housing material	Aluminum	
Ambient temperature	-20...50 °C	
IP rating	IP65, with connector	
Approval/Conformity	FCC Part 15, WEEE, EAC	
Productview	Page 58	

	BIS00Z0 BIS U-626-069-101-06-ST32		
		BIS00YZ BIS U-626-069-111-06-ST31	BIS00YY BIS U-626-069-111-06-ST32
	UHF (860...960 MHz)	UHF (860...960 MHz)	UHF (860...960 MHz)
	865…868 MHz	902…928 MHz	902…928 MHz
	Industrial Ethernet / Ethernet TCP/IP / MOD-BUS TCP	Industrial Ethernet / Ethernet TCP/IP / MOD-BUS TCP	Industrial Ethernet / Ethernet TCP/IP / MOD-BUS TCP
	UHF 860/960 MHz (BIS U)	UHF 860/960 MHz (BIS U)	UHF 860/960 MHz (BIS U)
	1	1	1
	10 dBm…27 dBm (10 mW…500 mW)	10 dBm…27 dBm (10 mW…500 mW)	10 dBm…27 dBm (10 mW…500 mW)
	19.2...28.8 VDC	19.2...28.8 VDC	19.2...28.8 VDC
	Aluminum	Aluminum	Aluminum
	-20...50 °C	-20...50 °C	-20...50 °C
	IP65, with connector	IP65, with connector	IP65, with connector
	CE, ETSI EN 302 208, EAC, WEEE	FCC Part 15, WEEE, EAC	FCC Part 15, WEEE, EAC
	Page 59	Page 59	Page 59

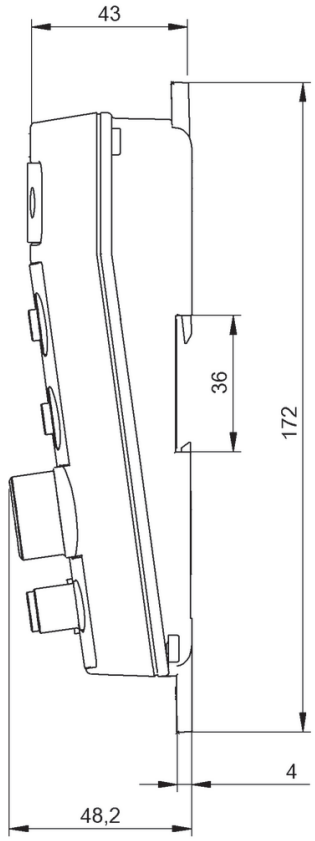

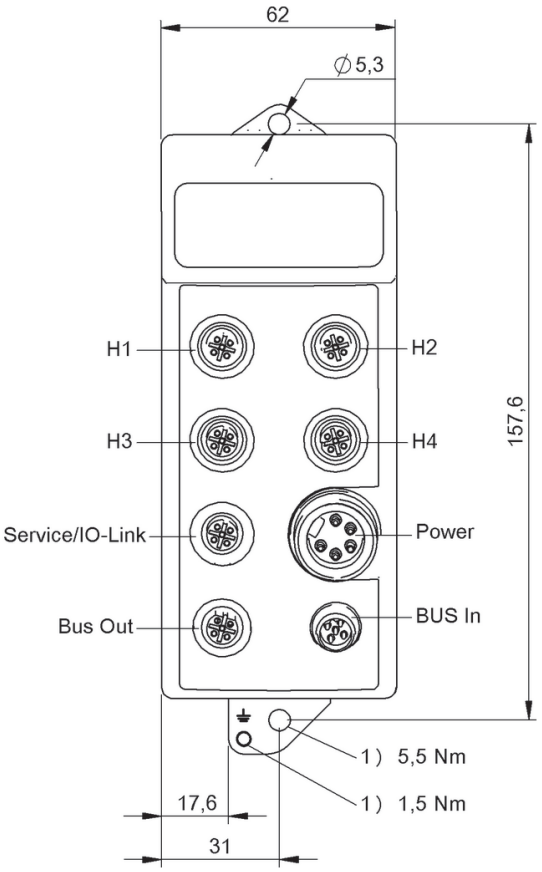

1) Tightening torque

BIS00T3, BIS012E

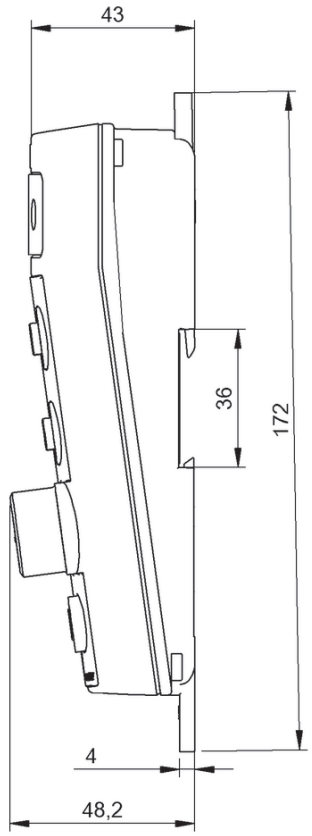

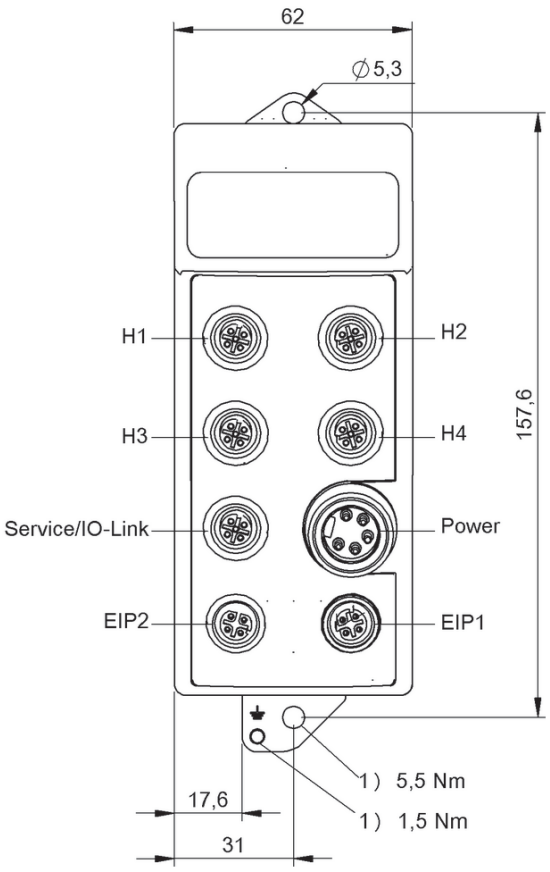

1) Tightening torque

BIS012F, BIS014C

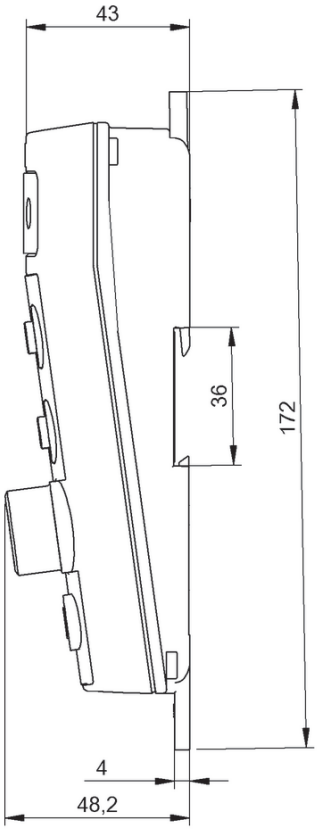

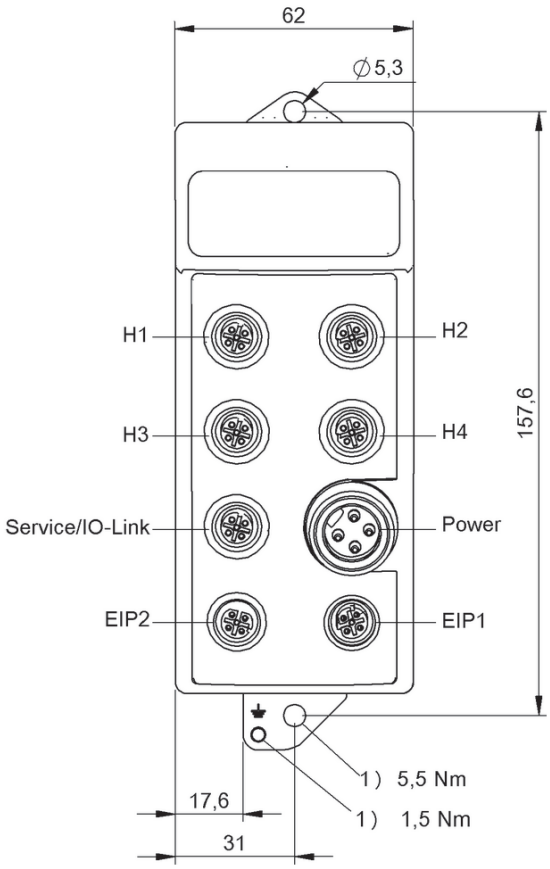

1) Tightening torque

BIS0122, BIS0146

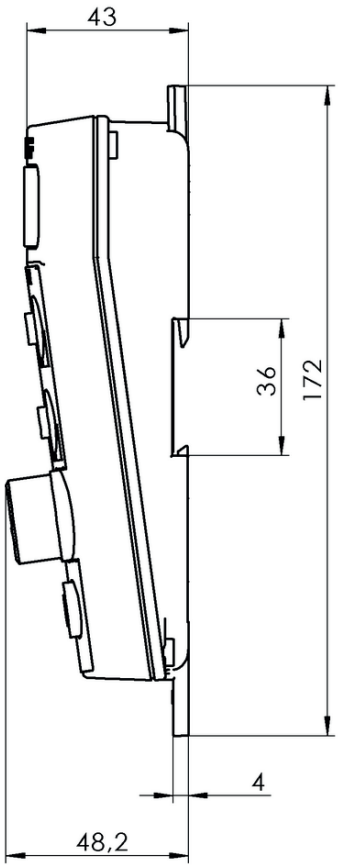

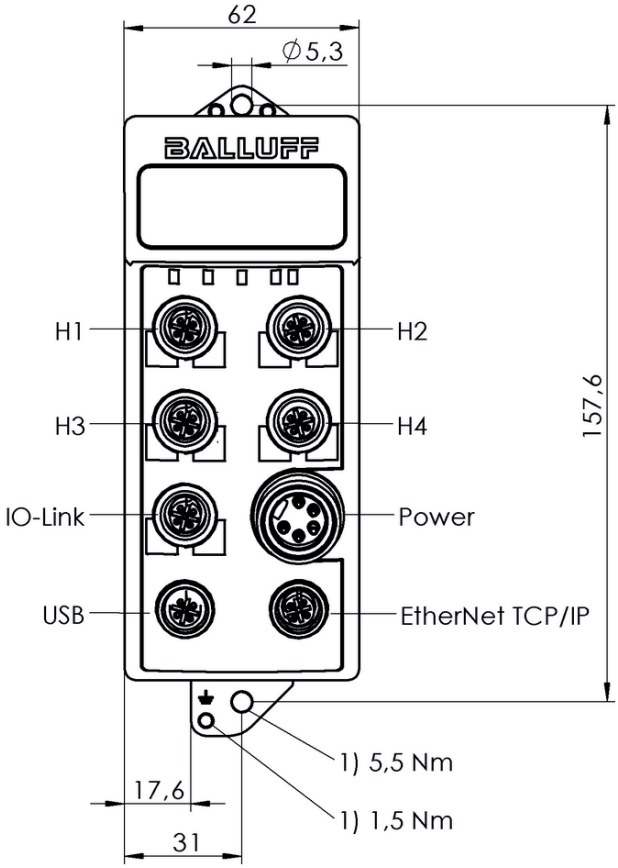

1) Tightening torque

BIS0186, BIS0187

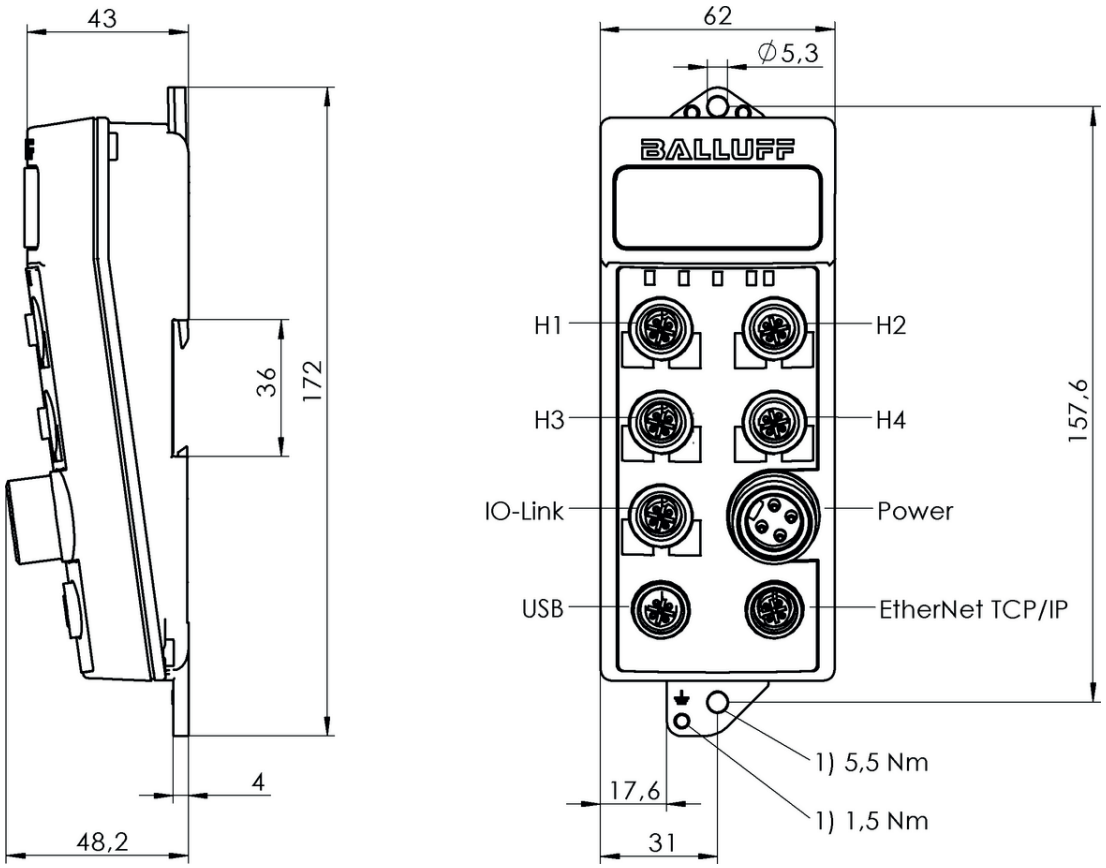

1) Tightening torque

BIS018J, BIS018K

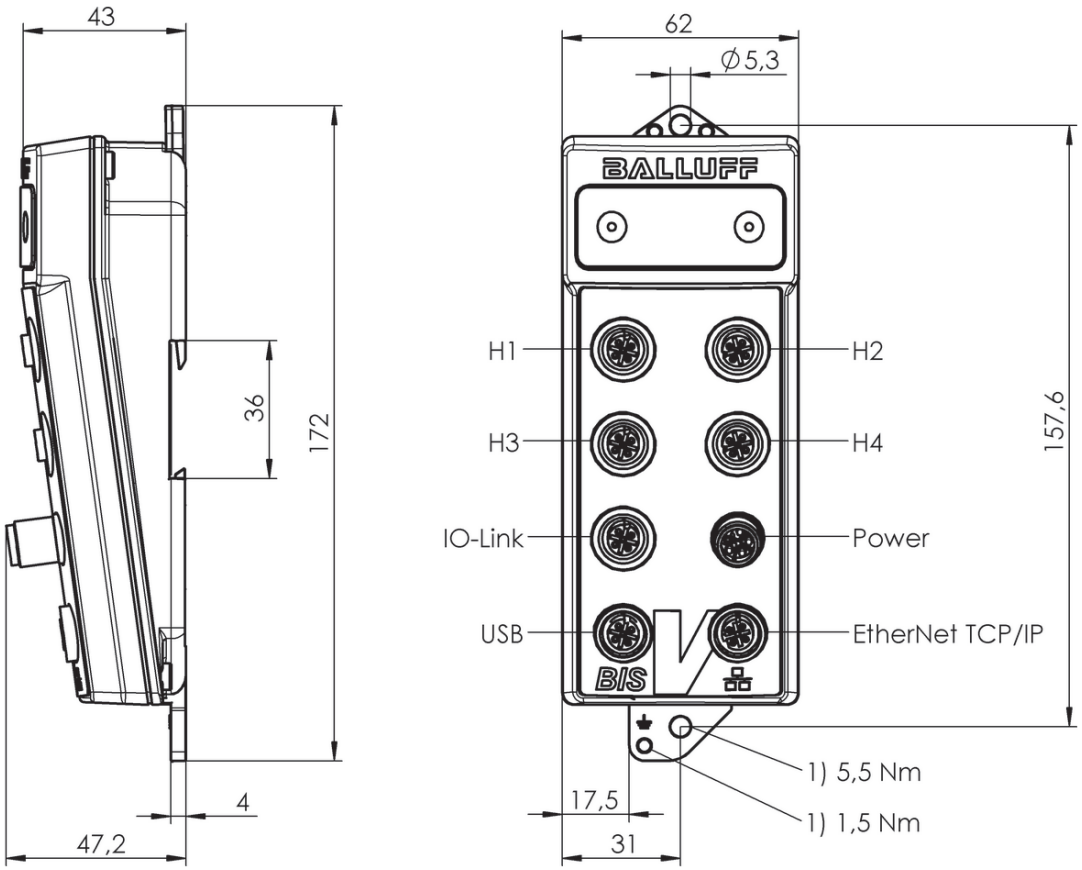

1) Tightening torque

BIS01AA, BIS01AC

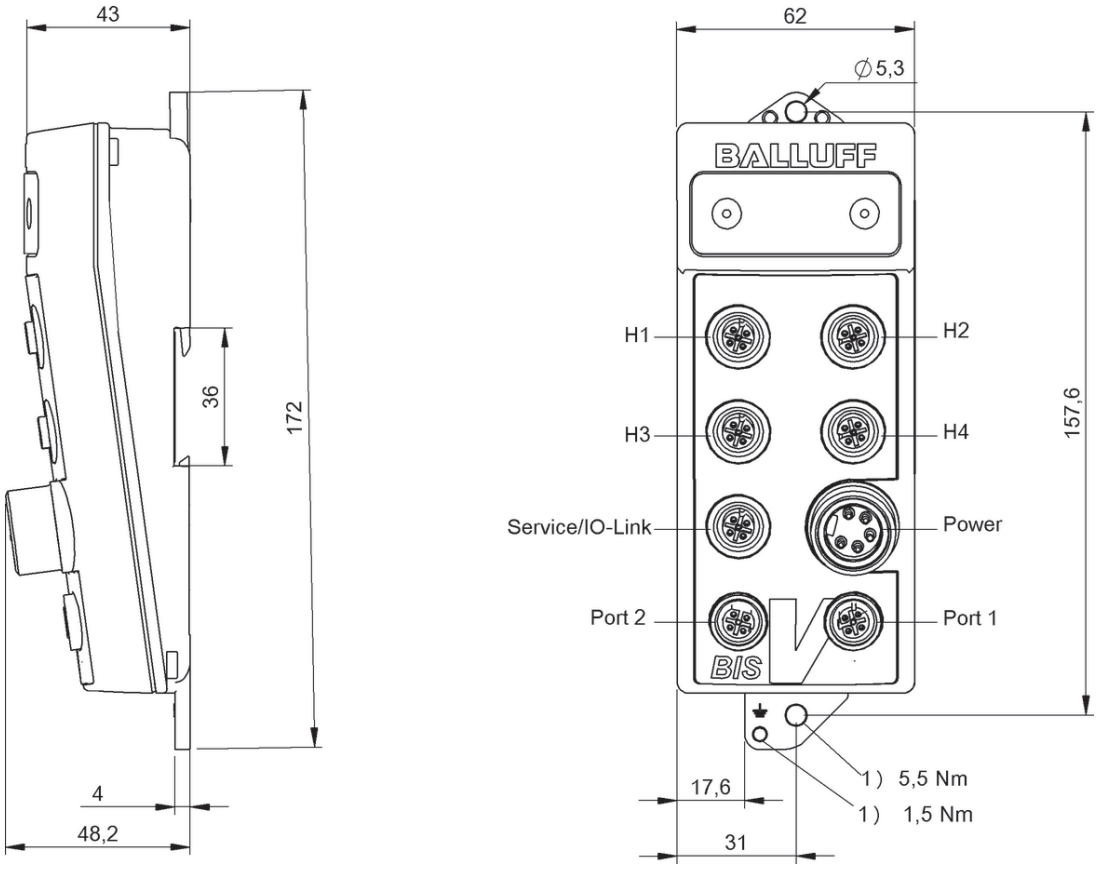

1) Tightening torque

BIS013U, BIS013W

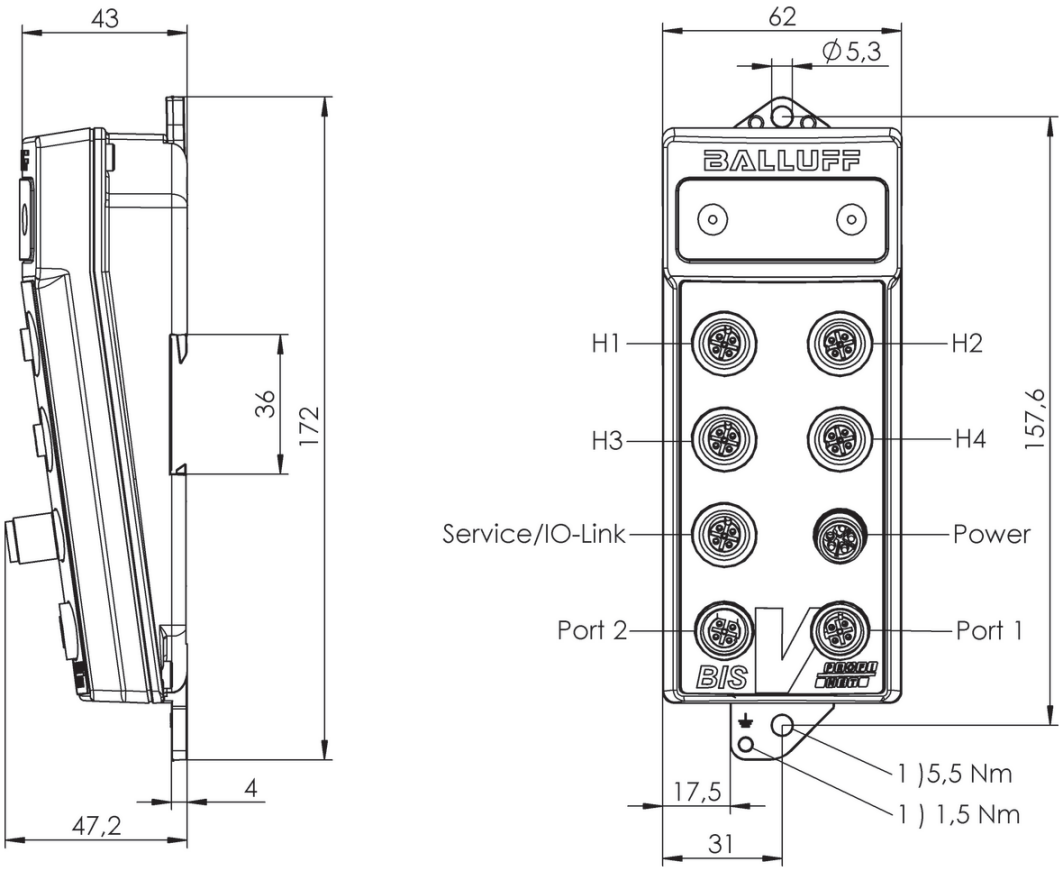

1) Tightening torque

BIS01AE, BIS01AF

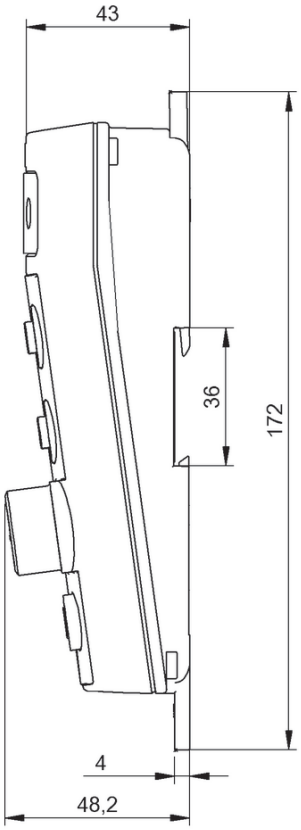

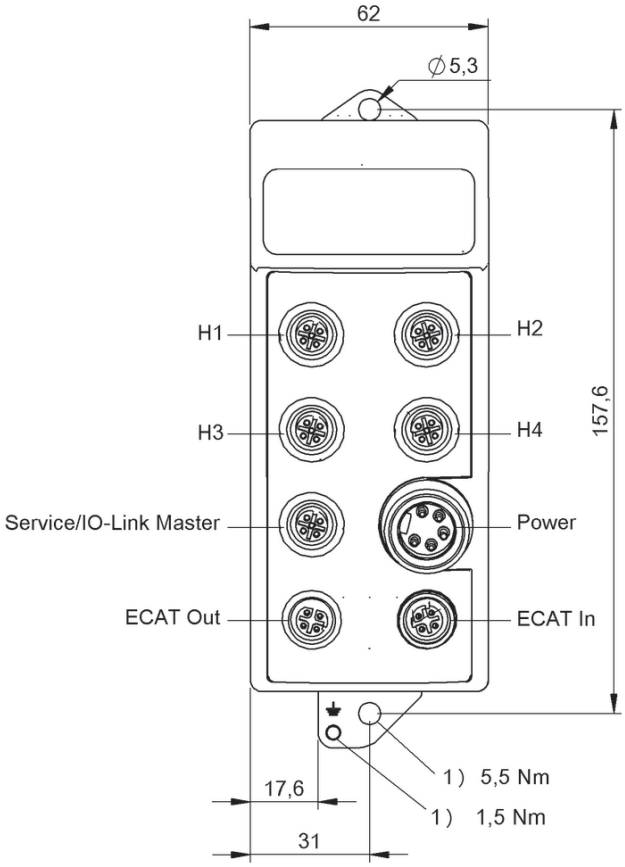

1) Tightening torque

BIS00U9, BIS0147

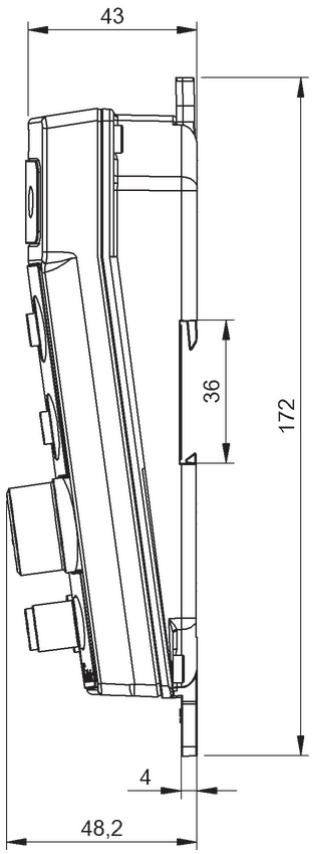

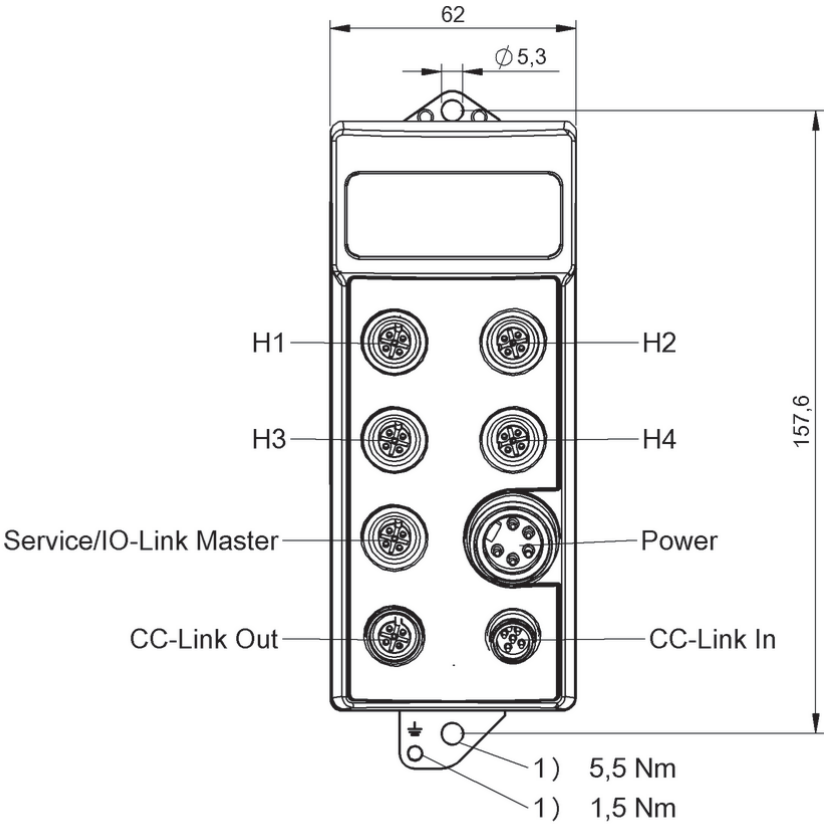

1) Tightening torque

BIS010P, BIS014E

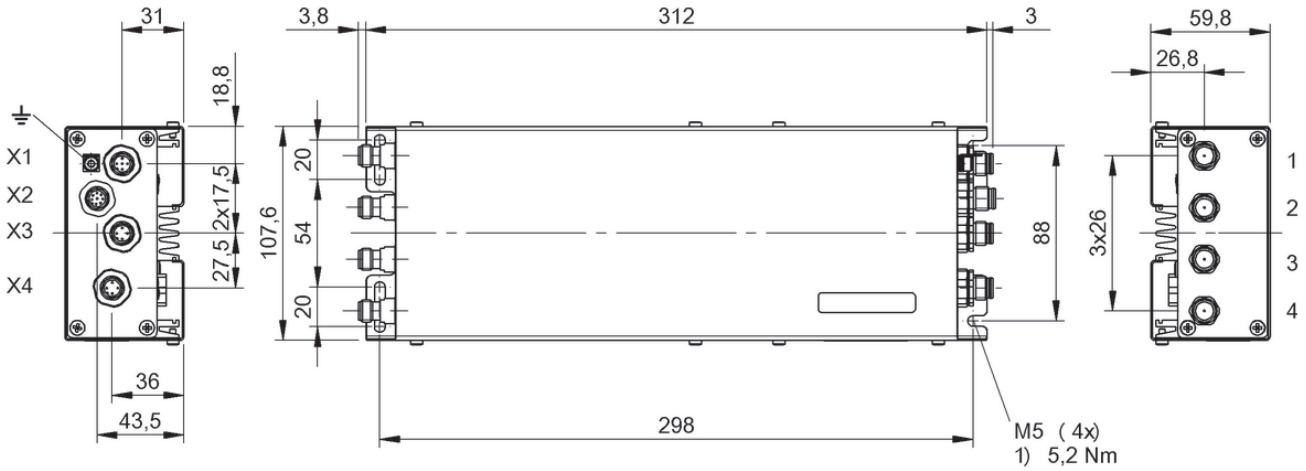

BIS00M7

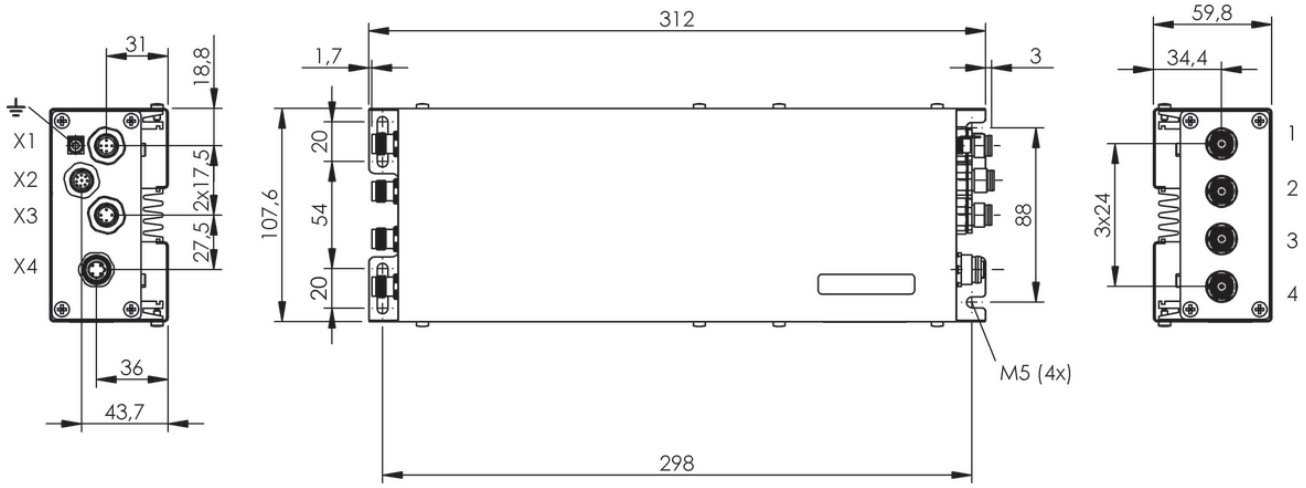

BIS013J, BIS018N

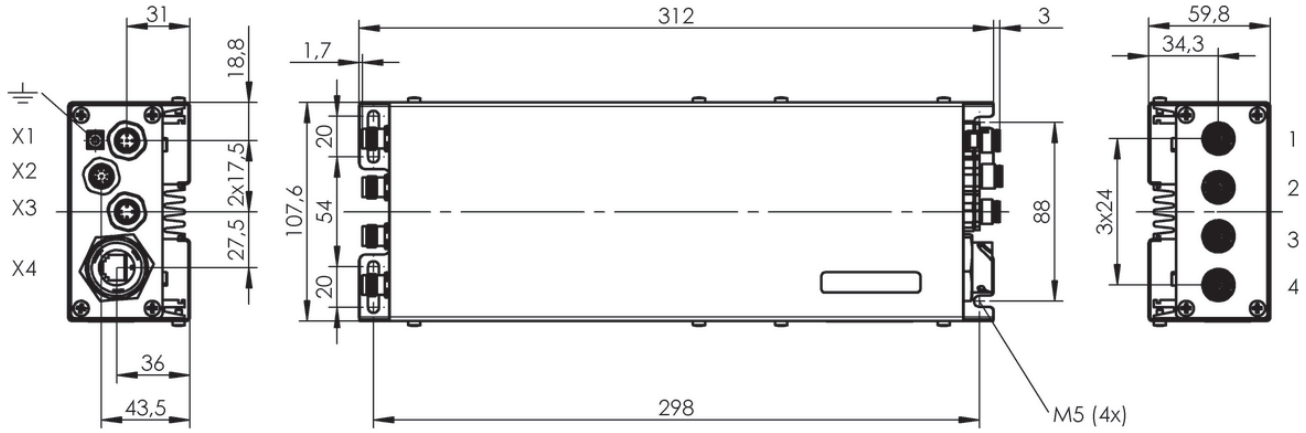

BIS012R

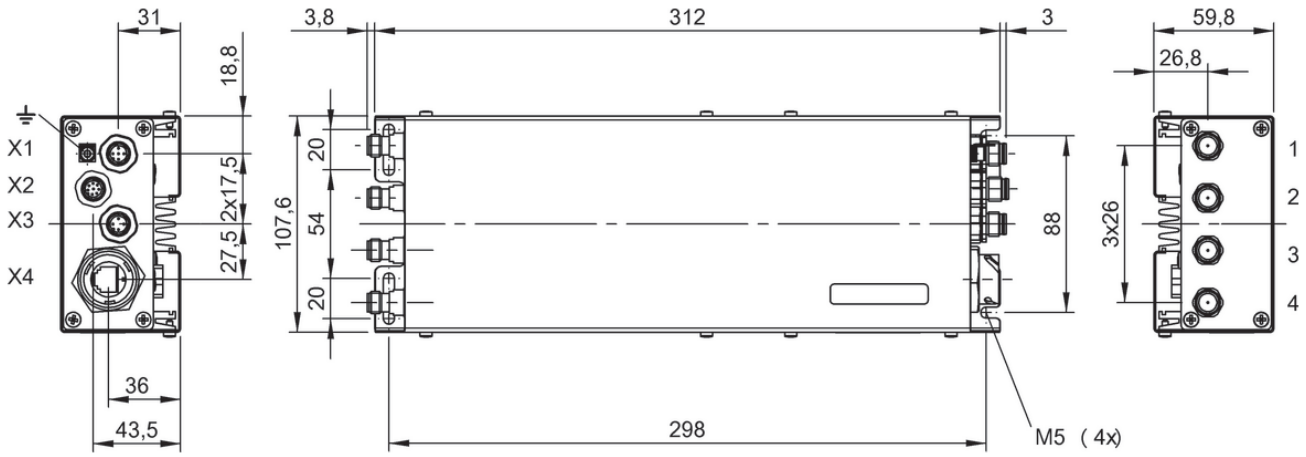

BIS00UR, BIS014H

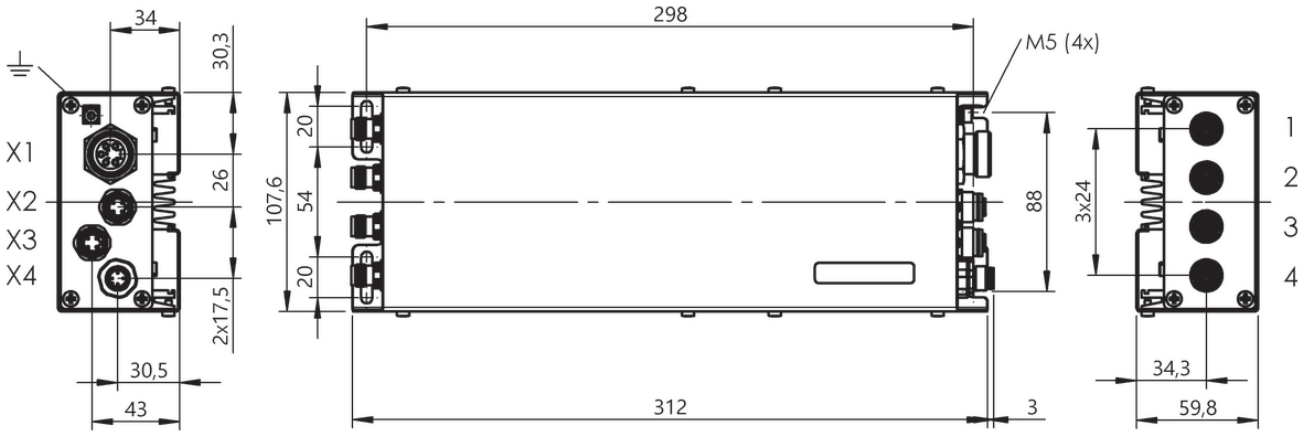

BIS00ZU, BIS00ZW, BIS017J

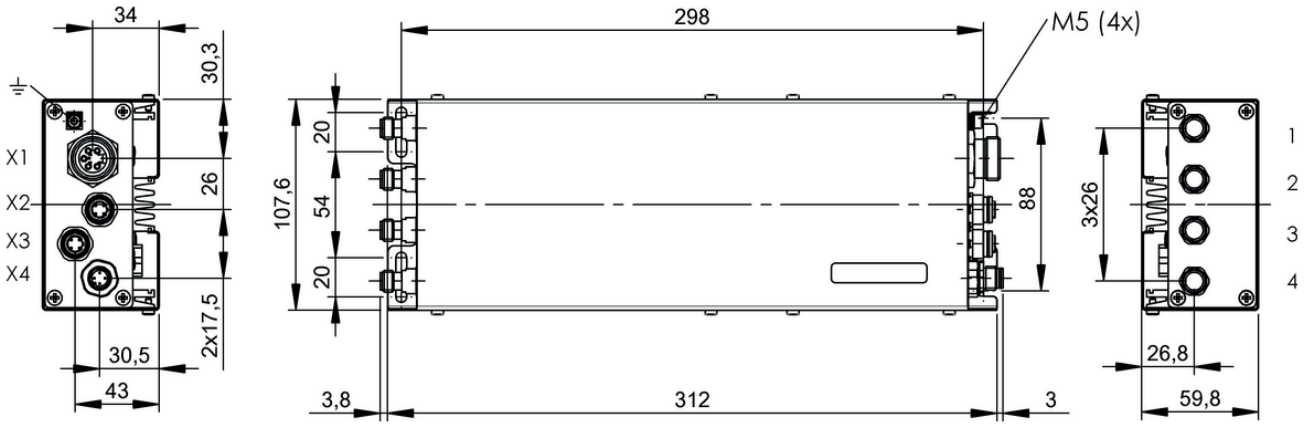

BIS0152

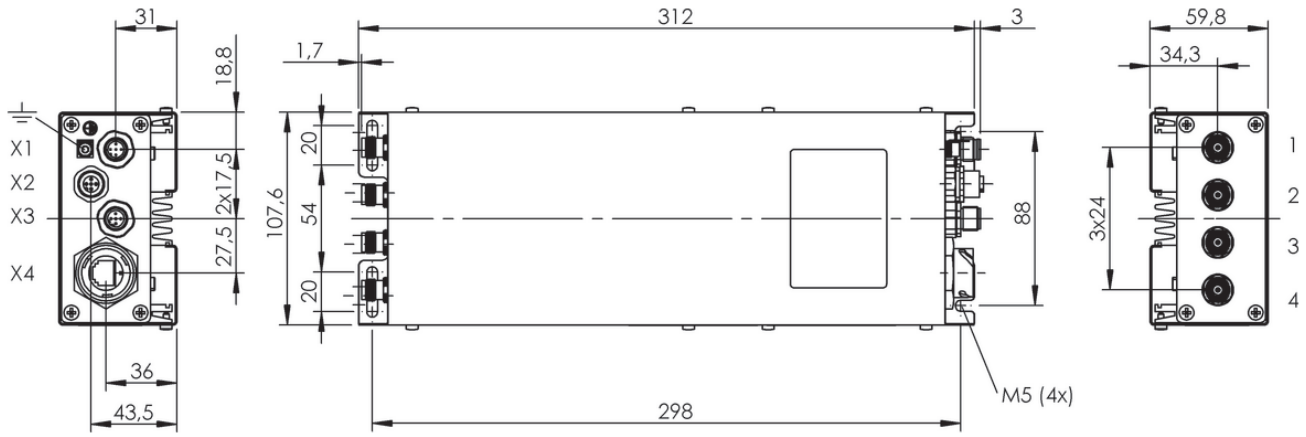

BIS0193, BIS0194

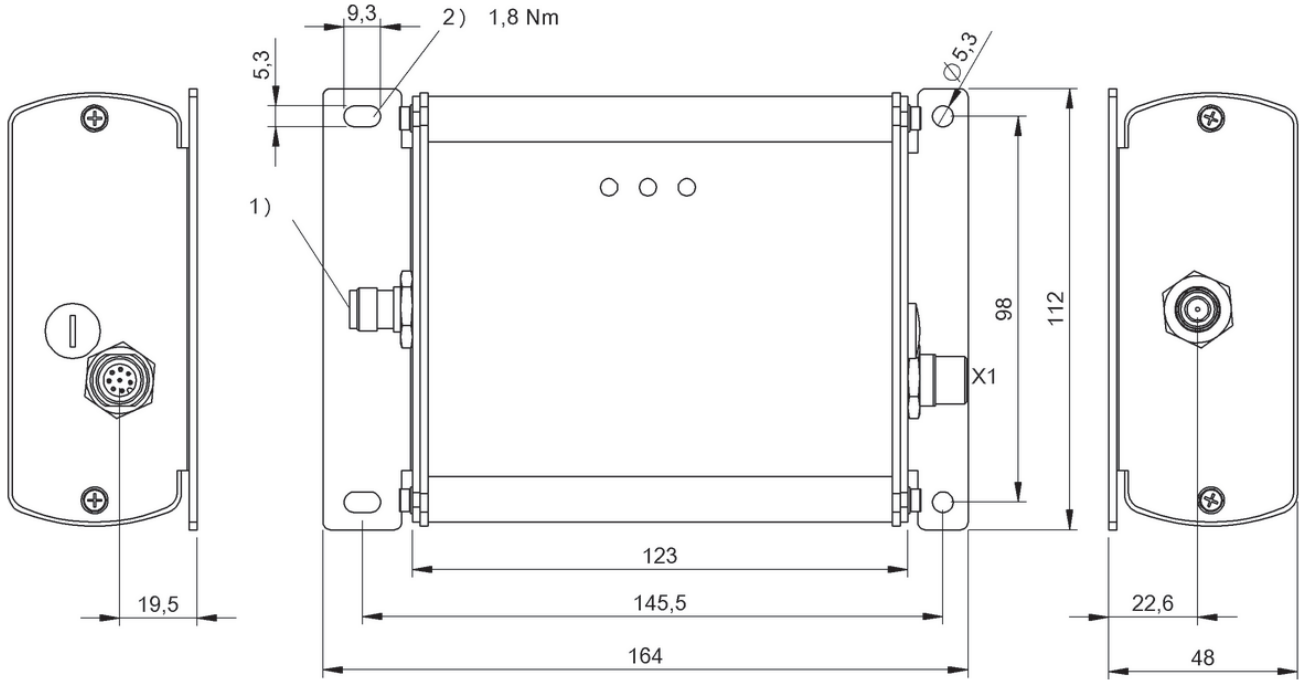

1) Antenna, 2) Tightening torque

BIS00Z3

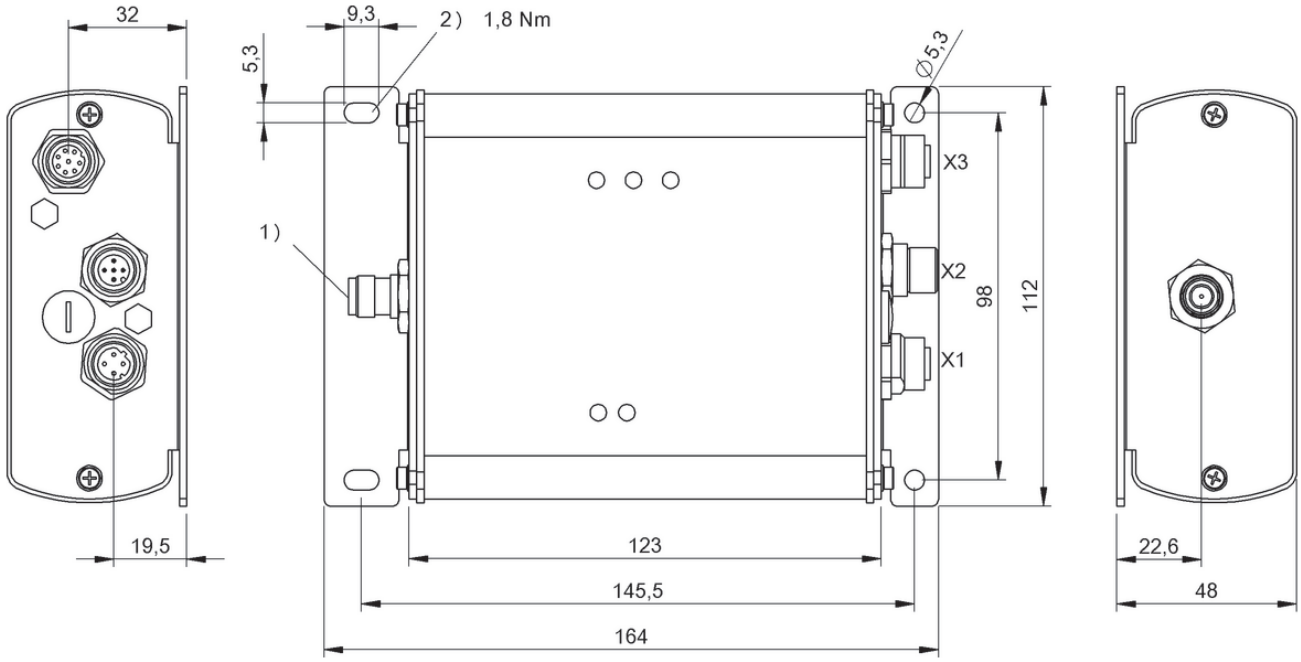

1) Antenna, 2) Tightening torque

BIS00Z0, BIS00YY

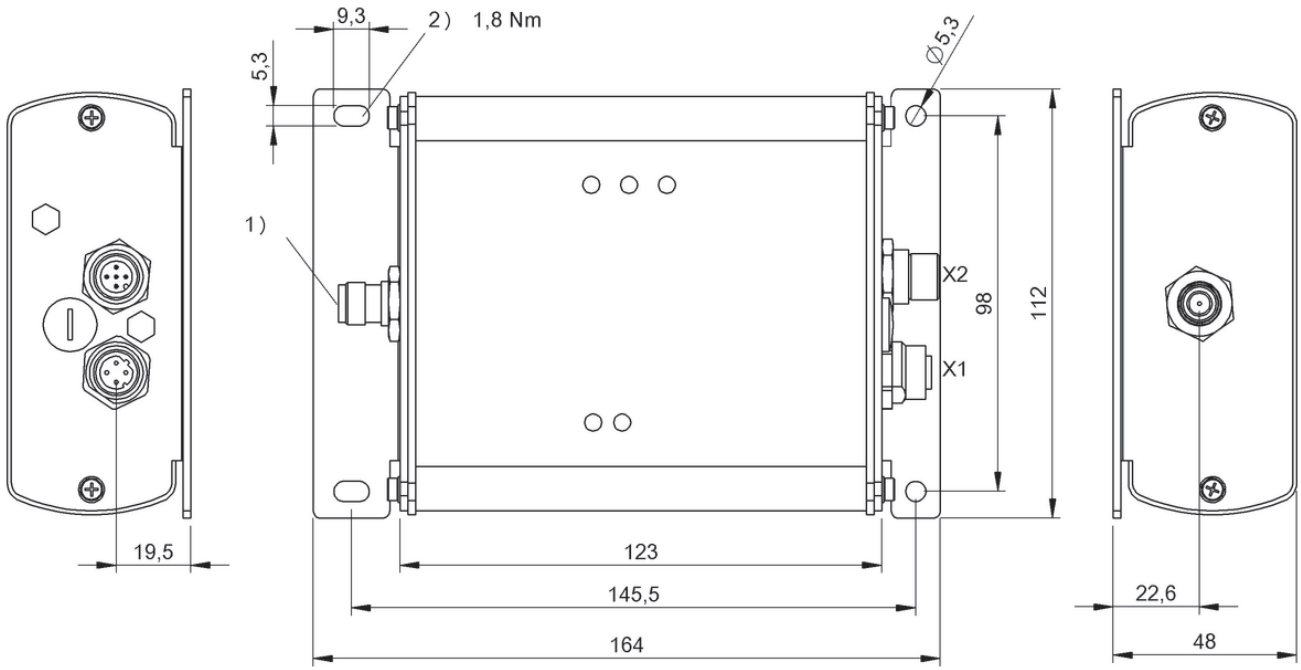

1) Antenna, 2) Tightening torque

BIS00YZ

Europa: 865,6-867,6 MHz	**BIS01E4** BIS U-4A7-082-01C-07-S4		
USA/Kanada: 902...928 MHz		**BIS01E8** BIS U-4A7-082-11C-07-S4	
China 920,5...924,5 MHz			
Product Group	UHF (860…960 MHz)	UHF (860…960 MHz)	
Radio license	Europa	USA	
Dimension	Ø 30 x 98 mm	Ø 30 x 98 mm	
Antenna type	Patch	Patch	
Polarization	zirkular	Zirkular	
Output power adjustable	-9.25…+13.75 dBmERP	-7…+16 dBmEIRP	
Connection	Built-in connector M12, 4-pole, A-coded	Built-in connector M12, 4-pole, A-coded	
Housing material PC	Stainless steel, PBT	Stainless steel,, PBT	
Interface	IO-Link 1.1, COM 3	IO-Link 1.1, COM 3	
Prozessdaten IN	32 Byte	32 Byte	
Process data OUT	32 Byte	32 Byte	
Process data	24 V DC LPS Class 2	24 V DC LPS Class 2	
Ambient temperature	0°…+70°C	0°…+70°C	
Protection degree	IP68 / IP69K	IP68 / IP69K	
Approval/Conformity	CE, ETSI EN 302 208, cULus, EAC, WEEE	FCC Part 15, IC RSS-210, cULus, WEEE, EAC	

	BIS01E9 BIS U-4A7-082-21C-07-S4
	UHF (860…960 MHz)
	China
	Ø 30 x 98 mm
	Patch
	zirkular
	-9.25…+13.75 dBmERP
	Built-in connector M12, 4-pole, A-coded
	Stainless steel,, PBT
	IO-Link 1.1, COM 3
	32 Byte
	32 Byte
	24 V DC LPS Class 2
	0°…+70°C
	IP68 / IP69K
	CMIIT-Radio Transmiss. Equipm., cULus, WEEE

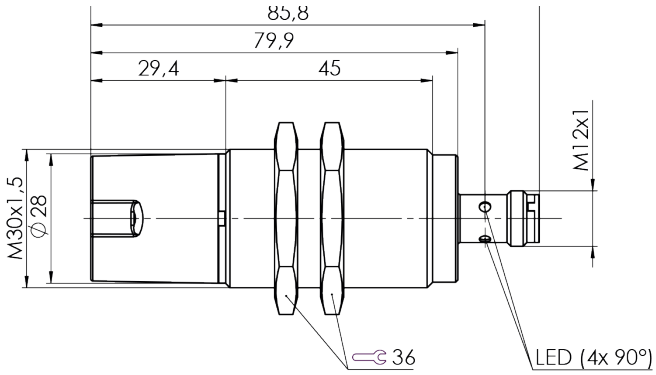

BIS01E4, BIS01E8, BIS01E9

BALLUFF
BALLUFF
BALLUFF

PORTABLE UHF READ/WRITE UNITS (860/960 MHZ)

Do you need more details?
Our Product Finder at **www.balluff.com**
provides you with product-specific information,

including technical drawings, data sheets, user guides and more for each individual product.
All items are available for download.

BALLUFF
BIS0045
BIS M-111-02/L
BALLUFF
BIS VM
BALLUFF
BIS M
122-01/A
Power
MS
NS
L1
A1
L2
A2
CP
BALLUFF
BIS M
Identification Systems
EtherNet/IP
Power
Port 1
Port 2

High transmission speed for large volumes of data

RFID SYSTEM HF (13.56 MHZ) BIS M

The RFID system BIS M supports global ISO standards and scores with a high transmission speed for large volumes of data. Through various combination options of data carriers and read/write heads, the system can be used for a variety of applications. The system is ideal, for example, in close-range parts tracking or for applications in production control such as palletizing or recording data on the workpiece.

Features

- 4-pin standard wiring and IO-Link components
- In combination with passive data carriers of average ranges up to a max. of 400 mm
- Seamless integration in applications through global RFID standards ISO 15693 and ISO 14443A
- All bus systems commonly used on a global basis available
- Easy, fast commissioning
- Balluff high-speed components (up to eight times faster than ISO 15693)
- Customer-specific developments
- A variety of accessories for an easy integration available at all places of use

	BIS018Y BIS M-113-03/L	
Product Group	HF (13.56 MHz)	
Dimension	Ø 4.35 x 3.6 mm	
Antenna type	round	
UID serial number, read-only	8 Byte	
Memory type	EEPROM	
Supported data carrier types	DIN ISO 15693	
User data, read/write	112 Byte	
Storage temperature	-40...85 °C	
Storage temperature temporary	—	
Ambient temperature	-40...85 °C	
Housing material	Epoxy-resin/fiberglass PVC	
Protection degree	IPx8	
Installation	metal-free (clear zone) on metal flush in metal	
Approval/Conformity	CE	
Productview	Page 106	

Suitable read/write head with max. read/write working distance

Installation	flush in metal*	on metal	metal-free (clear zone)	
BIS M-302				
BIS M-305				
BIS M-402-xxx-002				
BIS M-402-xxx-007				
BIS M-410				
BIS M-411				
BIS M-449		0-5.5	0-6	
BIS M-451				
BIS VM-330				
BIS VM-343-401				
BIS VM-346-401				
BIS VM-348-401				
BIS VM-349-401		0-5.5	0-6	

Dimensions in mm
* Installation on request

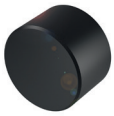

	BIS00UC BIS M-116-03/A	BIS00UE BIS M-116-08/A	BIS00YL BIS M-130-03/L
	HF (13.56 MHz)	HF (13.56 MHz)	HF (13.56 MHz)
	Ø 6 x 1 mm	Ø 6 x 1 mm	Ø 7.9 x 4.9 mm
	round	round	round
	8 Byte	8 Byte	8 Byte
	EEPROM	EEPROM	EEPROM
	DIN ISO 15693	DIN ISO 14443	DIN ISO 15693
	112 Byte	160 Byte	112 Byte
	-20...90 °C	-20...90 °C	-40...85 °C
	—	—	—
	0...50 °C	0...50 °C	-20...85 °C
	Epoxy-resin/fiberglass	Epoxy-resin/fiberglass	ABS, black
	IP67	IP67	IP68
	metal-free (clear zone) on metal flush in metal	metal-free (clear zone) on metal	metal-free (clear zone) on metal flush in metal
	CE	CE	CE
	Page 106	Page 106	Page 106

	flush in metal	on metal	metal-free (clear zone)	flush in metal	on metal*	metal-free (clear zone)	flush in metal	on metal	metal-free (clear zone)
			0-7			0-7			
		0-4	0-7.5						
									0-9
			0-3			0-3			
									0-17
									0-20
	0-2	0-3	0-4.5				0-2	0-5.5	0-6
	1.3-2.5	0-4	0-6.5						
	0-2	0-3	0-4.5				0-2	0-5.5	0-6
			0-3.5			0-3.5	0-3	0-6	0-6.5
			0-3.5			0-3.5	0-3	0-6	0-6.5
	0-2	0-3	0-5						
	1.3-2.5	0-4	0-6.5						

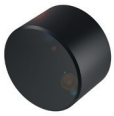

	BIS00YJ BIS M-130-10/L
Product Group	HF (13.56 MHz)
Dimension	Ø 7.9 x 4.9 mm
Antenna type	round
UID serial number, read-only	4 Byte
Memory type	EEPROM
Supported data carrier types	DIN ISO 14443
User data, read/write	736 Byte
Storage temperature	-40...85 °C
Storage temperature temporary	—
Ambient temperature	-20...85 °C
Housing material	ABS, black
Protection degree	IP68
Installation	metal-free (clear zone) on metal flush in metal
Approval/Conformity	CE
Productview	Page 106

Suitable read/write head with max. read/write working distance

Installation	flush in metal	on metal	metal-free (clear zone)
BIS M-302			
BIS M-304			
BIS M-305			
BIS M-307		0-7	0-5
BIS M-400-xxx-001			
BIS M-400-xxx-002			
BIS M-400-xxx-401			
BIS M-402-xxx-002			0-4.5
BIS M-402-xxx-004			
BIS M-404-xxx-401			
BIS M-408-045-001			0-6.5
BIS M-410			0-6
BIS M-411			0-6.5
BIS M-414	0-1	0-3	0-2
BIS M-449			
BIS VM-305			
BIS VM-306			
BIS VM-307	0-7		0-5
BIS VM-330	0-1	0-3	0-2
BIS VM-332			
BIS VM-333			
BIS VM-343-401	0-1.5	0-4	0-2.5
BIS VM-344-401			
BIS VM-345-401			
BIS VM-346-401	0-1.5	0-4	0-2.5
BIS VM-348-401			
BIS VM-349-401			

Dimensions in mm

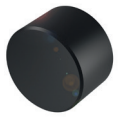
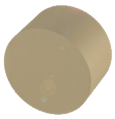

	BIS00YK BIS M-130-07/L	BIS01A1 BIS M-103-03/L-SA1	BIS01A0 BIS M-122-21/A
	HF (13.56 MHz)	HF (13.56 MHz)	HF (13.56 MHz)
	Ø 7.9 x 4.9 mm	Ø 8.1 x 4.9 mm	Ø 10 x 4.5 mm
	round	round	round
	8 Byte	8 Byte	8 Byte
	EEPROM	EEPROM	EEPROM
	DIN ISO 15693	DIN ISO 15693	DIN ISO 15693
	992 Byte	112 Byte	32 Byte
	-40...85 °C	-40...85 °C	-25...85 °C
	—	—	—
	-20...85 °C	-20...85 °C	-25...70 °C
	ABS, black	PEEK, Natural	PA 12, PU potting
	IP68	IP68	IP67
	metal-free (clear zone) on metal flush in metal	metal-free (clear zone)	metal-free (clear zone) on metal flush in metal
	CE	CE, WEEE, EAC	CE
	Page 106	Page 106	Page 106

	flush in metal	on metal	metal-free (clear zone)	flush in metal	on metal	metal-free (clear zone)	flush in metal	on metal	metal-free (clear zone)
							0-5.5		0-7.5
							0-3.5		0-5.5
							0-3.5		0-5.5
		0-8	0-10				0-3.5		0-5.5
							0-5.5		0-11.5
							0-3.5		0-4.5
									0-7.5
			0-9				0-3.5		0-6.5
							0-3.5		0-6.5
							0-2	0-4	0-4.5
			0-13					0-7.5	0-9.5
			0-12						
			0-13						
	0-2	0-4	0-4.5				0-2	0-3.5	0-4
							0-4.5	0-6.5	0-6.5
							0-3.5		0-5.5
							0-3.5		
	0-8		0-10				0-3.5		0-5.5
	0-2	0-4	0-4.5				0-2	0-3.5	0-4
							0-3	0-5	0-5.5
									0-8.5
	0-2.5	0-5	0-5				0-2	0-3	0-3.5
								0-7.5	
	0-2.5	0-5	0-5				0-2	0-3	0-3.5
							0-3.5		0-5.5
							0-4.5	0-6.5	0-6.5

	BIS0048 BIS M-122-01/A	
Product Group	HF (13.56 MHz)	
Dimension	Ø 10 x 4.5 mm	
Antenna type	round	
UID serial number, read-only	4 Byte	
Memory type	EEPROM	
Supported data carrier types	DIN ISO 14443	
User data, read/write	752 Byte	
Storage temperature	-25...85 °C	
Storage temperature temporary	—	
Ambient temperature	-25...70 °C	
Housing material	PA 12, PU potting	
Protection degree	IP67	
Installation	metal-free (clear zone) flush in metal	
Approval/Conformity	CE	
Productview	Page 106	

Suitable read/write head with max. read/write working distance

Installation	flush in metal	on metal	metal-free (clear zone)	
BIS M-300				
BIS M-302			0-7	
BIS M-304			0-5	
BIS M-305			0-5	
BIS M-307			0-5	
BIS M-400-xxx-001			0-9.5	
BIS M-400-xxx-002			0-5	
BIS M-400-xxx-401				
BIS M-402-xxx-002			0-5	
BIS M-402-xxx-004			0-5	
BIS M-404-xxx-401				
BIS M-405-xxx-001				
BIS M-408-045-001				
BIS M-414				
BIS M-449				
BIS VM-300				
BIS M-302				
BIS M-304				
BIS VM-305			0-5	
BIS VM-306				
BIS VM-307			0-5	
BIS VM-330				
BIS VM-332				
BIS VM-333				
BIS VM-343-401				
BIS VM-344-401				
BIS VM-345-401				
BIS VM-346-401				
BIS VM-348-401				
BIS VM-349-401				

Dimensions in mm
* Installation on request

	BIS004A BIS M-122-02/A	BIS019C BIS M-1R1-02/L	BIS0040 BIS M-105-01/A
	HF (13.56 MHz)	HF (13.56 MHz)	HF (13.56 MHz)
	Ø 10 x 4.5 mm	Ø 10.1 x 4.5 mm	Ø 11.98 x 6 mm
	round	round	round
	8 Byte	8 Byte	4 Byte
	FRAM	FRAM	EEPROM
	DIN ISO 15693	DIN ISO 15693	DIN ISO 14443
	2000 Byte	2000 Byte	752 Byte
	-25...85 °C	-25...85 °C	-25...85 °C
	—	—	—
	-25...70 °C	-25...85 °C	-25...70 °C
	PA 12, PU potting	PEEK, GF30	Epoxy resin-glass fiber, GF
	IP67	IP68	IP67
	metal-free (clear zone) on metal flush in metal	metal-free (clear zone) on metal flush in metal	metal-free (clear zone) on metal flush in metal
	CE	CE	CE
	Page 106	Page 106	Page 106

	flush in metal	on metal	metal-free (clear zone)*	flush in metal	on metal	metal-free (clear zone)*	flush in metal	on metal	metal-free (clear zone)
									0-9
	0-6		0-9	0-7	0-8		0-5		0-7
	0-5		0-7	0-6.5	0-7		0-5		0-5
	0-5		0-7				0-4		0-6
	0-5		0-7				0-4		0-6
	0-7		0-13						0-7
	0-5		0-6				0-5		0-6
			0-9						
	0-5		0-8				0-4		0-6
	0-5		0-8				0-4		0-6
	0-3.5	0-5.5	0-6						
									0-7
		0-9	0-11						
	0-3.5	0-5	0-5.5						
	0-6	0-8	0-8						
									0-9
				0-7	0-8				
				0-6.5	0-7				
	0-5		0-7				0-4		0-6
	0-5						0-5		
	0-5		0-7				0-4		0-6
	0-3.5	0-5	0-5.5						
	0-4.5	0-6.5	0-7						
			0-10						
	0-3.5	0-4.5	0-5						
		0-9	0-1						
	0-3.5	0-4.5	0-5						
	0-5		0-7						
	0-6	0-8	0-8						

	BIS0042 BIS M-105-02/A
Product Group	HF (13.56 MHz)
Dimension	Ø 11.98 x 6 mm
Antenna type	round
UID serial number, read-only	8 Byte
Memory type	FRAM
Supported data carrier types	DIN ISO 15693
User data, read/write	2000 Byte
Storage temperature	-25...85 °C
Storage temperature temporary	—
Ambient temperature	-25...70 °C
Housing material	Epoxy resin-glass fiber, GF
Protection degree	IP67
Installation	metal-free (clear zone) on metal flush in metal
Approval/Conformity	CE
Productview	Page 106

Suitable read/write head with max. read/write working distance

Installation	flush in metal	on metal	metal-free (clear zone)
BIS M-300			0-11
BIS M-302	0-6		0-9
BIS M-304	0-6		0-7
BIS M-305	0-4		0-8
BIS M-307	0-6		0-8
BIS M-400-xxx-001			0-11
BIS M-400-xxx-002			0-9
BIS M-400-xxx-401			0-13
BIS M-402-xxx-002	0-4		0-6
BIS M-402-xxx-004	0-6		0-8
BIS M-404-xxx-401	0-6	0-8	0-8.5
BIS M-405-xxx-001			0-11
BIS M-408-045-001		0-11	0-13
BIS M-410			
BIS M-411			
BIS M-414	0-5	0-6	0-6.5
BIS M-449	0-7	0-9.5	0-10
BIS M-451			
BIS VM-300			0-11
BIS VM-301			
BIS M-302			
BIS M-304			
BIS VM-305	0-6		0-8
BIS VM-306	0-6		
BIS VM-307	0-6		0-8
BIS VM-330	0-5	0-6	0-6.5
BIS VM-332	0-6	0-8	0-8.5
BIS VM-333			0-13
BIS VM-343-401	0-4	0-5	0-5.5
BIS VM-344-401			0-11
BIS VM-345-401			
BIS VM-346-401	0-4	0-5	0-5.5
BIS VM-348-401	0-5		0-7
BIS VM-349-401	0-7	0-9.5	0-10
BIS M-410			

Dimensions in mm
* Installation on request

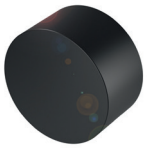
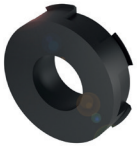

	BIS00YH BIS M-131-10/L	BIS019E BIS M-1R2-02/L	BIS01CE BIS M-107-03/L
	HF (13.56 MHz)	HF (13.56 MHz)	HF (13.56 MHz)
	Ø 12 x 6.4 mm	Ø 15.3 x 4.5 mm	Ø 16 x 3 mm
	round	round	round
	4 Byte	8 Byte	8 Byte
	EEPROM	FRAM	EEPROM
	DIN ISO 14443	DIN ISO 15693	DIN ISO 15693
	736 Byte	2000 Byte	112 Byte
	-40...85 °C	-25...85 °C	—
	—	—	-40...85 °C 1x1000 h
	-20...85 °C	-25...85 °C	-25...85 °C
	ABS	PEEK, GF30	PPS
	IP68	IP68	IP68
	metal-free (clear zone) on metal flush in metal	metal-free (clear zone) on metal flush in metal	metal-free (clear zone)
	CE	CE	CE, WEEE, EAC
	Page 107	Page 107	Page 107

	flush in metal	on metal	metal-free (clear zone)*	flush in metal	on metal	metal-free (clear zone)*	flush in metal	on metal	metal-free (clear zone)
				0-11	0-12				0-28
				0-10	0-10				
		0-8	0-10						
									0-17
			0-9						
			0-13						
			0-12						
			0-13						
									0-11
	0-2	0-4	0-4.5						
									0-25
				0-11	0-12				
				0-10	0-10				
									0-18
									0-16
									0-30
									0-15
			0-5						

	BIS0044 BIS M-110-02/L
Product Group	HF (13.56 MHz)
Dimension	Ø 20 x 2.8 mm
Antenna type	round
UID serial number, read-only	8 Byte
Memory type	FRAM
Supported data carrier types	DIN ISO 15693
User data, read/write	2000 Byte
Storage temperature	-25...85 °C
Storage temperature temporary	—
Ambient temperature	-25...85 °C
Housing material	PA 6
Protection degree	IP68
Installation	metal-free (clear zone) on metal flush in metal
Approval/Conformity	CE
Productview	Page 107

Suitable read/write head with max. read/write working distance

Installation	flush in metal	on metal	metal-free (clear zone)
BIS M-300			0-22
BIS M-301			0-32
BIS M-302			0-16
BIS M-304			0-14
BIS M-305			0-13
BIS M-307			0-13
BIS M-340			0-90
BIS M-371-000-A01			0-70
BIS M-372-000-A01			0-115
BIS M-373-000-A01			
BIS M-400-xxx-001			0-20
BIS M-400-xxx-002			0-15
BIS M-400-xxx-401			0-18
BIS M-401			0-30
BIS M-402-xxx-002			0-15
BIS M-402-xxx-004			0-15
BIS M-404-xxx-401			0-10
BIS M-405-xxx-001			0-20
BIS M-408-045-001			0-23
BIS M-410			
BIS M-411			0-45
BIS M-451		0-5	0-12
BIS VM-300		0-22	
BIS VM-301		0-32	
BIS M-302			
BIS M-304			
BIS VM-305		0-13	
BIS VM-307		0-13	
BIS VM-332		0-10	
BIS VM-333		0-18	
BIS VM-344-401		0-22	
BIS VM-345-401	0-5	0-22	
BIS VM-348-401		0-12	
BIS VM-349-401	0-5	0-12	
BIS M-371-000-A01			
BIS M-372-000-A01			
BIS M-373-000-A01			
BIS M-410			
BIS M-411			

Dimensions in mm, * Installation on request

	BIS00YF BIS M-132-03/L	BIS00YC BIS M-132-10/L	BIS0143 BIS M-128-03/L
	HF (13.56 MHz)	HF (13.56 MHz)	HF (13.56 MHz)
	Ø 24.9 x 4.8 mm	Ø 24.9 x 4.8 mm	Ø 26 x 6 mm
	round	round	round
	8 Byte	4 Byte	8 Byte
	EEPROM	EEPROM	EEPROM
	DIN ISO 15693	DIN ISO 14443	DIN ISO 15693
	112 Byte	736 Byte	112 Byte
	-40...85 °C	-40...85 °C	-25...85 °C
	—	—	—
	-20...85 °C	-20...85 °C	-25...70 °C
	ABS, black	ABS, black	Epoxy-resin/fiberglass
	IP68	IP68	IP67
	metal-free (clear zone)	metal-free (clear zone)	metal-free (clear zone)
	CE	CE	CE
	Page 107	Page 107	Page 107

	flush in metal	on metal	metal-free (clear zone)*	flush in metal	on metal	metal-free (clear zone)	flush in metal	on metal	metal-free (clear zone)
			0-100						
			0-160						
			0-160						
									0-27
									0-21
									0-13
			0-48			0-15			
			0-80			0-26			
									0-13
									0-21
			0-100						
			0-160						
			0-160						
			0-48			0-15			
			0-80			0-26			

Do you need more details? Our Product Finder at www.balluff.com provides you with product-specific information, including technical drawings, data sheets, user guides and more for each individual product. All items are available for download.

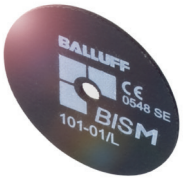

	BIS003Y BIS M-101-01/L	
Product Group	HF (13.56 MHz)	
Dimension	Ø 30 x 1 mm	
Antenna type	round	
UID serial number, read-only	4 Byte	
Memory type	EEPROM	
Supported data carrier types	DIN ISO 14443	
User data, read/write	752 Byte	
Storage temperature	-25...85 °C	
Storage temperature temporary	—	
Ambient temperature	-25...70 °C	
Housing material	Epoxy resin-glass fiber, GF	
Protection degree	IP67	
Installation	metal-free (clear zone)	
Approval/Conformity	CE	
Productview	Page 107	

Suitable read/write head with max. read/write working distance

Installation	flush in metal	on metal	metal-free (clear zone)	
BIS M-300			0-22	
BIS M-301			0-34	
BIS M-302			0-16	
BIS M-304			0-14	
BIS M-340				
BIS M-371-000-A01				
BIS M-372-000-A01				
BIS M-400-xxx-001			0-20	
BIS M-400-xxx-002			0-15	
BIS M-400-xxx-401				
BIS M-401			0-28	
BIS M-402-xxx-002			0-14	
BIS M-402-xxx-004			0-15	
BIS M-404-xxx-401				
BIS M-405-xxx-001			0-12	
BIS M-406-045-001				
BIS M-408-045-001				
BIS M-410				
BIS M-411				
BIS M-449				
BIS M-4006-001				
BIS M-4008-001				
BIS VM-300			0-15	
BIS VM-301			0-15	
BIS VM-332				
BIS VM-333				
BIS VM-344-401				
BIS VM-345-401				
BIS VM-349-401				
BIS M-410				
BIS M-411				

Dimensions in mm
* Installation on request

	BIS0045 BIS M-111-02/L	BIS00Y8 BIS M-134-10/L	BIS003Z BIS M-102-01/L
	HF (13.56 MHz)	HF (13.56 MHz)	HF (13.56 MHz)
	Ø 30 x 2.8 mm	Ø 49.8 x 5.3 mm	Ø 50 x 1 mm
	round	round	round
	8 Byte	4 Byte	4 Byte
	FRAM	EEPROM	FRAM
	DIN ISO 15693	DIN ISO 14443	DIN ISO 14443
	2000 Byte	736 Byte	752 Byte
	-25...85 °C	-40...85 °C	-25...85 °C
	—	—	—
	-25...85 °C	-20...85 °C	-25...70 °C
	PA 6	ABS, black	Epoxy resin-glass fiber, GF
	IP68	IP68	IP67
	metal-free (clear zone) on metal flush in metal	metal-free (clear zone)	metal-free (clear zone)
	CE	CE	CE
	Page 107	Page 108	Page 108

	flush in metal	on metal	metal-free (clear zone)	flush in metal	on metal	metal-free (clear zone)	flush in metal	on metal	metal-free (clear zone)
			0-28						0-32
			0-45						0-45
			0-20						0-20
									0-18
			0-140						
			0-120						
			0-175						
			0-28						0-28
			0-20						0-18
			0-21						
			0-40						0-45
			0-18						
			0-28						0-28
			0-28						
						0-32			
			0-67			0-56			
			3-13						
			0-52						
			0-52						
	0-28	0-18	0-10						0-32
	0-45	0-30							0-45
	0-21								
	0-28	0-18	0-10						
	0-28								
	3-13								

	BIS0046 BIS M-112-02/L	
Product Group	HF (13.56 MHz)	
Dimension	Ø 50 x 3.3 mm	
Antenna type	round	
UID serial number, read-only	8 Byte	
Memory type	FRAM	
Supported data carrier types	DIN ISO 15693	
User data, read/write	2000 Byte	
Storage temperature	-25...85 °C	
Storage temperature temporary	140 °C 1x100 h, -40 °C...90 °C 1x1000 h	
Ambient temperature	-25...85 °C	
Housing material	PA 6	
Protection degree	IP68	
Installation	metal-free (clear zone)	
Approval/Conformity	CE	
Productview	Page 108	

Suitable read/write head with max. read/write working distance

Installation	flush in metal	on metal	metal-free (clear zone)	
BIS M-300			0-44	
BIS M-301			0-70	
BIS M-302			0-30	
BIS M-304				
BIS M-305				
BIS M-307				
BIS M-340			0-170	
BIS M-341			35-90	
BIS M-371-000-A01			0-150	
BIS M-372-000-A01			0-235	
BIS M-373-000-A01			0-270	
BIS M-400-xxx-001			0-38	
BIS M-400-xxx-002			0-28	
BIS M-400-xxx-401			0-30	
BIS M-401			0-60	
BIS M-402-xxx-002				
BIS M-402-xxx-004				
BIS M-404-xxx-401				
BIS M-405-xxx-001			0-38	
BIS M-406-045-001			0-38	
BIS M-408-045-001			0-40	
BIS M-414				
BIS M-449				
BIS M-4006-001			0-80	
BIS M-4008-001			0-80	
BIS VM-300			0-44	
BIS VM-301			0-70	
BIS VM-305				
BIS VM-307				
BIS VM-330				
BIS VM-332				
BIS VM-333			0-30	
BIS VM-341-001			35-90	
BIS VM-341-401			0-100	
BIS VM-343-401				
BIS VM-344-401			0-44	
BIS VM-345-401			0-45	
BIS VM-346-401				
BIS VM-349-401				

Dimensions in mm

	BIS00NW BIS M-143-02/A-M8			BIS0100 BIS M-143-02/A-M8-SA2			BIS00NU BIS M-143-02/A-M6		
	HF (13.56 MHz)			HF (13.56 MHz)			HF (13.56 MHz)		
	Ø 22 x 21 mm			Ø 21 x 21 mm			Ø 21 x 21 mm		
	round			round			round		
	8 Byte			8 Byte			8 Byte		
	FRAM			FRAM			FRAM		
	DIN ISO 15693			DIN ISO 15693			DIN ISO 15693		
	2000 Byte			2000 Byte			2000 Byte		
	-25...95 °C			-25...95 °C			-25...95 °C		
	—			—			—		
	-25...70 °C			-25...70 °C			-25...70 °C		
	Steel, data carrier: PA 12-GF30			Steel, data carrier: PA 12-GF30			Steel, data carrier: PA 12-GF30		
	IP68, IPx9K			IP68, IPx9K			IP68, IPx9K		
	on metal			on metal			on metal		
	CE			CE			CE		
	Page 108			Page 108			Page 108		
	flush in metal	on metal	metal-free (clear zone)	flush in metal	on metal	metal-free (clear zone)	flush in metal	on metal	metal-free (clear zone)
		0-13			0-13			0-13	
		0-13			0-13			0-13	
		0-12			0-12			0-12	
		0-12			0-12			0-12	
		0-23			0-23			0-23	
		0-13			0-13			0-13	
		0-12			0-12			0-12	
		0-13			0-13			0-13	
		0-16			0-16			0-16	
		0-9			0-9			0-9	
		0-9			0-9			0-9	
		0-9,5			0-9.5			0-9.5	
		0-13			0-13			0-13	
		0-13			0-13			0-13	
		0-7			0-7			0-7	
		0-10			0-10			0-10	
		0-18			0-18			0-18	
		0-18			0-18			0-18	
		0-13			0-13			0-13	
		0-12			0-12			0-12	
		0-12			0-12			0-12	
		0-7			0-7			0-7	
		0-9,5			0-9.5			0-9.5	
		0-13			0-13			0-13	
		0-23			0-23			0-23	
		0-7,5			0-7.5			0-7.5	
		0-13			0-13			0-13	
		0-16			0-16			0-16	
		0-7,5			0-7.5			0-7.5	
		0-10			0-10			0-10	

Do you need more details? Our Product Finder at www.balluff.com provides you with product-specific information, including technical drawings, data sheets, user guides and more for each individual product. All items are available for download.

	BIS00M8 BIS M-140-02/A-M8
Product Group	HF (13.56 MHz)
Dimension	Ø 22 x 31 mm
Antenna type	round
UID serial number, read-only	8 Byte
Memory type	FRAM
Supported data carrier types	DIN ISO 15693
User data, read/write	2000 Byte
Storage temperature	-25...95 °C
Storage temperature temporary	—
Ambient temperature	-25...70 °C
Housing material	Steel, data carrier: PA 12-GF30
Protection degree	IP68, IPx9K
Installation	on metal
Approval/Conformity	CE
Productview	Page 108

Suitable read/write head with max. read/write working distance

Installation	flush in metal	on metal	metal-free (clear zone)
BIS M-300		0-22	
BIS M-302		0-17	
BIS M-305		0-17	
BIS M-307		0-16	
BIS M-341		0-46	
BIS M-371-000-A01			
BIS M-372-000-A01			
BIS M-373-000-A01			
BIS M-400-xxx-001		0-22	
BIS M-400-xxx-002			
BIS M-400-xxx-401			
BIS M-401		0-32	
BIS M-402-xxx-002			
BIS M-402-xxx-004			
BIS M-404-xxx-401			
BIS M-405-xxx-001		0-22	
BIS M-408-045-001		0-22	
BIS M-414		0-9	
BIS M-449		0-13	
BIS M-4006-001			
BIS M-4008-001			
BIS VM-300		0-22	
BIS VM-305		0-17	
BIS VM-307		0-16	
BIS VM-330			
BIS VM-332			
BIS VM-333			
BIS VM-341-001		0-46	
BIS VM-341-401			
BIS VM-343-401			
BIS VM-344-401		0-22	
BIS VM-345-401			
BIS VM-346-401			

Dimensions in mm

	BIS00M9 BIS M-140-02/A-M6	BIS0119 BIS M-142-20/A-M8-GY	
	HF (13.56 MHz)	HF (13.56 MHz)	
	Ø 22 x 31 mm	Ø 22 x 26 mm	
	round	round	
	8 Byte	8 Byte	
	FRAM	FRAM	
	DIN ISO 15693	DIN ISO 15693	
	2000 Byte	8192 Byte	
	-25...95 °C	-25...95 °C	
	—	—	
	-25...70 °C	-25...70 °C	
	Steel, data carrier: PA 12-GF30	Steel, data carrier: PA 12-GF30 gray	
	IP68, IPx9K	IP68, IPx9K	
	on metal	on metal	
	CE	CE	
	Page 108	Page 109	

	flush in metal	on metal*	metal-free (clear zone)*	flush in metal	on metal	metal-free (clear zone)	flush in metal	on metal	metal-free (clear zone)
		0-22							
		0-17							
		0-17							
		0-16							
		0-46							
					0-50				
					0-65				
					0-65				
		0-22							
		0-32							
		0-22							
		0-22							
		0-9							
		0-13							
					0-38				
					0-38				
		0-22							
		0-17							
		0-16							
		0-46							
					0-40				
					0-7.5				
		0-22							
					0-22				
					0-7.5				

	BIS004E BIS M-125-01/L	
Product Group	HF (13.56 MHz)	
Dimension	30 x 6 x 30 mm	
Antenna type	round	
UID serial number, read-only	4 Byte	
Memory type	EEPROM	
Supported data carrier types	DIN ISO 14443	
User data, read/write	752 Byte	
Storage temperature	-25...85 °C	
Storage temperature temporary	—	
Ambient temperature	-25...70 °C	
Housing material	PBT	
Protection degree	IP67	
Installation	metal-free (clear zone) on metal	
Approval/Conformity	CE	
Productview	Page 109	

Suitable read/write head with max. read/write working distance

Installation	flush in metal	on metal*	metal-free (clear zone)*	
BIS M-300				
BIS M-301				
BIS M-302				
BIS M-304				
BIS M-305				
BIS M-341				
BIS M-371-000-A01				
BIS M-372-000-A01				
BIS M-373-000-A01				
BIS M-400-xxx-001				
BIS M-400-xxx-002				
BIS M-400-xxx-401				
BIS M-401				
BIS M-404-xxx-401				
BIS M-405-xxx-001				
BIS M-410				
BIS M-449				
BIS M-458-045-001				
BIS M-4006-001				
BIS M-4006-002				
BIS M-4008-001				
BIS VM-300				
BIS VM-301				
BIS VM-305				
BIS VM-332				
BIS VM-333				
BIS VM-341-001				
BIS VM-341-401				
BIS VM-343-401				
BIS VM-344-401				
BIS VM-345-401				
BIS VM-349-401				

Dimensions in mm, * Installation on request

	BIS0043 BIS M-108-02/L	BIS011F BIS M-108-11/A							
	HF (13.56 MHz)	HF (13.56 MHz)							
	32 x 11 x 52 mm	32 x 11 x 52 mm							
	round	round							
	8 Byte	8 Byte							
	FRAM	FRAM							
	DIN ISO 15693	DIN ISO 15693 (High Memory)							
	2000 Byte	8192 Byte							
	-25...85 °C	-25...85 °C							
	—	—							
	-25...70 °C	-25...70 °C							
	PBT, GF	PBT, GF							
	IP67	IP67							
	metal-free (clear zone) on metal flush in metal	metal-free (clear zone) on metal							
	CE	CE							
	Page 109	Page 109							

	flush in metal	on metal*	metal-free (clear zone)*	flush in metal	on metal	metal-free (clear zone)	flush in metal	on metal	metal-free (clear zone)
	0-16		0-30						
			0-45						
	0-12		0-20						
	0-10		0-18						
	0-11		0-17						
	0-50		20-60						
			0-110						
			0-160						
			0-185						
	0-16		0-28						
	0-12		0-20						
	0-13	0-15	0-21						
			0-40						
	0-6	0-8	0-11	0-5	0-6	0-6.5			
	0-16		0-28						
			0-40						
	0-7	0-9.5	0-13						
				11-18	0-28	0-36			
	10-19	0-32	0-52						
				11-18	0-28	0-36			
	10-19	0-32	0-52						
	0-16		0-30						
			0-45						
	0-11		0-17						
	0-6	0-8	0-11	0-5	0-6	0-6.5			
	0-13	0-15	0-21						
	14-25		20-60						
	14-20	0-36	0-64	11-20	0-30	0-42			
	0-16		0-30		0-15	0-18			
			0-28			0-18			
	0-7	0-9.5	0-13						

	BIS0111 BIS M-108-20/A
Product Group	HF (13.56 MHz)
Dimension	32 x 11 x 52 mm
Antenna type	round
UID serial number, read-only	8 Byte
Memory type	FRAM
Supported data carrier types	DIN ISO 15693
User data, read/write	8192 Byte
Storage temperature	-25...85 °C
Storage temperature temporary	—
Ambient temperature	-25...70 °C
Housing material	PBT, GF
Protection degree	IP67
Installation	metal-free (clear zone) on metal flush in metal
Approval/Conformity	CE
Productview	Page 109

Suitable read/write head with max. read/write working distance

Installation	flush in metal	on metal	metal-free (clear zone)
BIS M-301			0-45
BIS M-371-000-A01			0-100
BIS M-372-000-A01			0-150
BIS M-373-000-A01			0-150
BIS M-400-xxx-401	0-13	0-15	0-21
BIS M-404-xxx-401			
BIS M-4006-001			
BIS M-4008-001	11-18	0-28	0-36
BIS VM-301			0-50
BIS VM-332			
BIS VM-333	0-13	0-15	0-21
BIS VM-341-401			
BIS VM-344-401	0-16		0-30
BIS VM-345-401			0-28

Dimensions in mm

	BIS011E BIS M-108-13/A	BIS011A BIS M-108-14/A	
	HF (13.56 MHz)	HF (13.56 MHz)	
	32 x 11 x 52 mm	32 x 11 x 52 mm	
	round	round	
	8 Byte	8 Byte	
	FRAM	FRAM	
	DIN ISO 15693 (High Memory)	DIN ISO 15693 (High Memory)	
	32768 Byte	65536 Byte	
	-25...85 °C	-25...85 °C	
	—	—	
	-25...70 °C	-25...70 °C	
	PBT, GF	PBT, GF	
	IP67	IP67	
	metal-free (clear zone) on metal flush in metal	metal-free (clear zone) on metal flush in metal	
	CE	CE	
	Page 109	Page 109	

	flush in metal	on metal	metal-free (clear zone)	flush in metal	on metal	metal-free (clear zone)			
	0-5	0-6	0-6.5	0-5	0-6	0-6.5			
	11-18	0-28	0-36	11-18	0-28	0-36			
	11-18	0-28	0-36	11-18	0-28	0-36			
	0-5	0-6	0-6.5	0-5	0-6	0-6.5			
						0-15			
	11-20	0-30	0-42	11-20	0-30	0-42			
		0-15	0-18		0-15	0-18			
			0-18			0-18			

	BIS00Y5 BIS M-135-03/L	
Product Group	HF (13.56 MHz)	
Dimension	51.5 x 6.4 x 51.5 mm	
Antenna type	round	
UID serial number, read-only	8 Byte	
Memory type	EEPROM	
Supported data carrier types	DIN ISO 15693	
User data, read/write	112 Byte	
Storage temperature	-40...85 °C	
Storage temperature temporary	—	
Ambient temperature	-20...85 °C	
Housing material	ABS, black	
Protection degree	IP68	
Installation	metal-free (clear zone)	
Approval/Conformity	CE	
Productview	Page 109	

Suitable read/write head with max. read/write working distance

Installation	flush in metal	on metal	metal-free (clear zone)	
BIS M-371-000-A01			10-205	
BIS M-372-000-A01			0-300	
BIS M-373-000-A01			0-340	
BIS M-400-xxx-001			0-50	
BIS M-408-045-001			0-48	
BIS M-410			0-68	
BIS M-411			0-110	
BIS M-371-000-A01			10-205	
BIS M-372-000-A01			0-300	
BIS M-373-000-A01			0-340	
BIS M-400-xxx-001			0-50	
BIS M-408-045-001			0-48	
BIS M-410			0-68	
BIS M-411			0-110	

Dimensions in mm

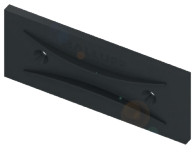

	BIS00Y3 BIS M-135-07/L	BIS00Y6 BIS M-135-02/L	BIS00W9 BIS M-136-03/L
	HF (13.56 MHz)	HF (13.56 MHz)	HF (13.56 MHz)
	51.5 x 6.4 x 51.5 mm	51.5 x 6.4 x 51.5 mm	52 x 11.5 x 128 mm
	round	round	round
	8 Byte	8 Byte	8 Byte
	EEPROM	FRAM	EEPROM
	DIN ISO 15693	DIN ISO 15693	DIN ISO 15693
	992 Byte	2000 Byte	112 Byte
	-40...85 °C	-40...85 °C	-40...85 °C
	—	—	—
	-20...85 °C	-20...85 °C	-20...85 °C
	ABS, black	ABS, black	ABS, black
	IP68	IP68	IP68
	metal-free (clear zone)	metal-free (clear zone)	metal-free (clear zone)
	CE	CE	CE
	Page 109	Page 109	Page 109

	flush in metal	on metal	metal-free (clear zone)	flush in metal	on metal	metal-free (clear zone)	flush in metal	on metal	metal-free (clear zone)
						25-140			15-210
						0-230			0-350
						0-230			0-370
			23-46			0-60			
			11-75			0-100			
						25-140			15-210
						0-230			0-350
						0-230			0-370
			23-46			0-60			
			11-75			0-100			

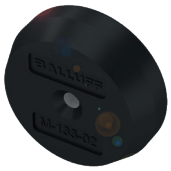

	BIS00Y9 BIS M-133-02/A
Product Group	HF (13.56 MHz)
Dimension	Ø 30 x 9.7 mm
Antenna type	round
UID serial number, read-only	8 Byte
Memory type	FRAM
Supported data carrier types	DIN ISO 15693
User data, read/write	2000 Byte
Storage temperature	-40...130 °C
Storage temperature temporary	—
Ambient temperature	-40...85 °C
Housing material	PA, black
Protection degree	IP67
Installation	metal-free (clear zone) on metal
Approval/Conformity	CE
Productview	Page 109

Suitable read/write head with max. read/write working distance

Installation	flush in metal	on metal	metal-free (clear zone)
BIS M-300			
BIS M-340			
BIS M-351			
BIS M-371-000-A01			0-70
BIS M-372			
BIS M-400-xxx-001			
BIS M-408-045-001			
BIS M-410			0-32
BIS M-411			38-52
BIS M-451			
BIS M-458-045-001			
BIS M-4006-001			0-55
BIS M-4006-002			
BIS M-4008-001		0-45	0-55
BIS M-4008-002			
BIS VM-300			
BIS VM-343-401			
BIS VM-344-401			
BIS VM-346-401			
BIS VM-351-001			
BIS VM-351-401			
BIS M-410			0-32
BIS M-411			38-52
BIS M-4006-001			0-55
BIS M-4008-001		0-45	0-55

Dimensions in mm
** Combined with metal mounting plate BAM012M

	BIS00LC BIS M-107-03/L-H200	BIS004F BIS M-150-02/A	BIS004H BIS M-151-02/A
	HF (13.56 MHz)	HF (13.56 MHz)	HF (13.56 MHz)
	22 x 6.5 x 40 mm	22 x 6.5 x 40 mm	22 x 6.5 x 40 mm
	round	Rod	Rod
	8 Byte	8 Byte	8 Byte
	EEPROM	FRAM	FRAM
	DIN ISO 15693	DIN ISO 15693	DIN ISO 15693
	112 Byte	2000 Byte	2000 Byte
	-25...85 °C	-25...85 °C	-25...85 °C
	200 °C 1x1000 h	-25...130 °C 1x1000 h	-25...130 °C 1x1000 h
	-25...70 °C	-25...70 °C	-25...70 °C
	PPS, GF40, with EP potting	PPS, GF40, with EP potting	PPS, GF40, with EP potting
	IP67	IP67	IP67
	metal-free (clear zone) on metal	metal-free (clear zone) on metal	metal-free (clear zone) on metal
	CE	CE	CE
	Page 109	Page 109	Page 110

	flush in metal	on metal	metal-free (clear zone)**	flush in metal	on metal	metal-free (clear zone)**	flush in metal	on metal	metal-free (clear zone)**
		0-13	0-27						
			0-100						
					0-65	0-65		0-65	0-65
		0-13	0-27						
		0-12	0-25						
					0-65	0-65		0-65	0-65
					0-42	0-42		0-38	0-38
					0-60	0-60		0-65	0-65
					0-60	0-60		0-65	0-65
		0-13	0-13		0-27	0-27			
					0-7	0-7			
		0-13	0-13		0-27	0-27			
					0-7	0-7			
					0-65	0-65		0-65	0-65
					0-52	0-52		0-52	0-52

	BIS011M BIS M-155-11/A	
Produktgruppe	HF (13.56 MHz)	
Abmessung	22 x 9.7 x 40 mm	
Antennenform	Rod	
UID Seriennummer, nur lesbar	8 Byte	
Speichertyp	FRAM	
Unterstützte Datenträgertypen	DIN ISO 15693 (High Memory)	
Nutzerdaten, lesen/schreiben	8192 Byte	
Lagertemperatur	-25...85 °C	
Lagertemperatur temporär	-25...130 °C 1x1000 h	
Umgebungstemperatur	-25...70 °C	
Gehäusematerial	PPS, GF40, with EP potting	
Schutzart	—	
Einbau	metal-free (clear zone) on metal	
Zulassung/Konformität	CE	
Zeichnung	Page 110	

Suitable read/write head with max. read/write working distance

Montage	flush in metal	on metal	metal-free (clear zone)**	
BIS M-4006-002		0-42	0-42	
BIS M-4008-002		0-42	0-42	
BIS VM-351-401		0-50	0-50	
BIS VM-355-401		0-34	0-34	

Dimensions in mm
** Combined with metal mounting plate BAM012M

	BIS012J BIS M-156-11/A	BIS0112 BIS M-156-20/A	
	HF (13.56 MHz)	HF (13.56 MHz)	
	22 x 9.7 x 40 mm	22 x 9.7 x 40 mm	
	Rod	Rod	
	8 Byte	8 Byte	
	FRAM	FRAM	
	DIN ISO 15693 (High Memory)	DIN ISO 15693	
	8192 Byte	8192 Byte	
	-25...85 °C	-25...85 °C	
	-25...130 °C 1x1000 h	-25...130 °C 1x1000 h	
	-25...70 °C	-25...70 °C	
	PPS, GF40, with EP potting	PPS, GF40, with PU potting	
	—	—	
	metal-free (clear zone) on metal	metal-free (clear zone) on metal	
	CE	CE	
	Page 110	Page 110	

	flush in metal	on metal	metal-free (clear zone)**	flush in metal	on metal	metal-free (clear zone)**	flush in metal	on metal	metal-free (clear zone)**
		0-42	0-42		0-68	0-68			
		0-42	0-42		0-68	0-68			
		0-42	0-42		0-70	0-70			
		0-30	0-30		0-45	0-45			

	BIS011Z BIS M-155-13/A	
Product Group	HF (13.56 MHz)	
Dimension	22 x 9.7 x 40 mm	
Antenna type	Rod	
UID serial number, read-only	8 Byte	
Memory type	FRAM	
Supported data carrier types	DIN ISO 15693 (High Memory)	
User data, read/write	32768 Byte	
Storage temperature	-25...85 °C	
Storage temperature temporary	-25...130 °C 1x1000 h	
Ambient temperature	-25...70 °C	
Housing material	PPS, GF40, with EP potting	
Protection degree	—	
Installation	metal-free (clear zone) on metal	
Approval/Conformity	CE	
Productview	Page 110	

Suitable read/write head with max. read/write working distance

Installation	flush in metal	on metal	metal-free (clear zone)**	
BIS M-4006-002		0-42	0-42	
BIS M-4008-002		0-42	0-42	
BIS VM-351-401		0-50	0-50	
BIS VM-355-401		0-34	0-34	

Dimensions in mm
** Combined with metal mounting plate BAM012M

	BIS012K BIS M-156-13/A	BIS011N BIS M-155-14/A	BIS012L BIS M-156-14/A
	HF (13.56 MHz)	HF (13.56 MHz)	HF (13.56 MHz)
	22 x 9.7 x 40 mm	22 x 9.7 x 40 mm	22 x 9.7 x 40 mm
	Rod	Rod	Rod
	8 Byte	8 Byte	8 Byte
	FRAM	FRAM	FRAM
	DIN ISO 15693 (High Memory)	DIN ISO 15693 (High Memory)	DIN ISO 15693 (High Memory)
	32768 Byte	65536 Byte	65536 Byte
	-25...85 °C	-25...85 °C	-25...85 °C
	-25...130 °C 1x1000 h	-25...130 °C 1x1000 h	-25...130 °C 1x1000 h
	-25...70 °C	-25...70 °C	-25...70 °C
	PPS, GF40, with EP potting	PPS, GF40, with EP potting	PPS, GF40, with EP potting
	—	—	—
	metal-free (clear zone) on metal	metal-free (clear zone) on metal	metal-free (clear zone) on metal
	CE	CE	CE
	Page 110	Page 110	Page 110

	flush in metal	on metal	metal-free (clear zone)**	flush in metal	on metal	metal-free (clear zone)**	flush in metal	on metal	metal-free (clear zone)**
		0-42	0-42		0-42	0-42		0-42	0-42
		0-42	0-42		0-42	0-42		0-42	0-42
		0-42	0-42		0-50	0-50		0-42	0-42
		0-30	0-30		0-34	0-34		0-30	0-30

	BIS00P3 BIS M-153-02/A	
Product Group	HF (13.56 MHz)	
Dimension	40 x 22 x 80 mm	
Antenna type	Rod	
UID serial number, read-only	8 Byte	
Memory type	FRAM	
Supported data carrier types	DIN ISO 15693	
User data, read/write	2000 Byte	
Storage temperature	-25...85 °C	
Storage temperature temporary	—	
Ambient temperature	-25...85 °C	
Housing material	POM	
Protection degree	—	
Installation	metal-free (clear zone) on metal flush in metal	
Approval/Conformity	CE	
Productview	Page 110	

Suitable read/write head with max. read/write working distance

Installation	flush in metal	on metal	metal-free (clear zone)**	
BIS M-351			0-100	
BIS M-451			0-100	
BIS M-458-045-001			0-54	
BIS M-4006-002			0-100	
BIS M-4008-002			0-100	
BIS VM-351-001	0-100			
BIS VM-351-401	0-100	0-100		
BIS VM-355-401	0-60	0-60		

Dimensions in mm
** Combined with metal mounting plate BAM012M

	BIS011W BIS M-153-11/A	BIS011Y BIS M-153-13/A	BIS011U BIS M-153-14/A
	HF (13.56 MHz)	HF (13.56 MHz)	HF (13.56 MHz)
	40 x 22 x 80 mm	40 x 22 x 80 mm	40 x 22 x 80 mm
	Rod	Rod	Rod
	8 Byte	8 Byte	8 Byte
	FRAM	FRAM	FRAM
	DIN ISO 15693 (High Memory)	DIN ISO 15693 (High Memory)	DIN ISO 15693 (High Memory)
	8192 Byte	32768 Byte	65536 Byte
	-25...85 °C	-25...85 °C	-25...85 °C
	—	—	—
	-25...85 °C	-25...85 °C	-25...85 °C
	POM	POM	POM
	—	—	—
	metal-free (clear zone) on metal	metal-free (clear zone) on metal	metal-free (clear zone) on metal
	CE	CE	CE
	Page 110	Page 110	Page 110

	flush in metal	on metal	metal-free (clear zone)	flush in metal	on metal	metal-free (clear zone)	flush in metal	on metal	metal-free (clear zone)
			0-55			0-55			0-55
			0-55			0-55			0-55
		0-60							
					0-60			0-60	
		0-36			0-36			0-36	

	BIS00YE BIS M-132-03/L-HT	
Product Group	HF (13.56 MHz)	
Dimension	Ø 24.9 x 4.8 mm	
Antenna type	round	
UID serial number, read-only	8 Byte	
Memory type	EEPROM	
Supported data carrier types	DIN ISO 15693	
User data, read/write	112 Byte	
Storage temperature	-40...220 °C	
Storage temperature temporary	—	
Ambient temperature	-40...85 °C	
Housing material	PPS	
Protection degree	IP68	
Installation	metal-free (clear zone)	
Approval/Conformity	CE, Ecolab	
Productview	Page 107	

Suitable read/write head with max. read/write working distance

Installation	flush in metal	on metal	metal-free (clear zone)	
BIS M-300			0-30	
BIS M-371-000-A01			0-100	
BIS M-372-000-A01			0-145	
BIS M-373-000-A01			0-155	
BIS M-400-xxx-001			0-30	
BIS M-400-xxx-002			0-24	
BIS M-401			0-50	
BIS M-402-xxx-002			0-20	
BIS M-406-045-001				
BIS M-408-045-001				
BIS M-410				
BIS M-411			0-70	
BIS M-4006-001			0-60	
BIS M-4008-001			0-60	
BIS VM-300			0-30	
BIS VM-341-401				
BIS VM-344-401			0-30	
BIS VM-345-401			0-34	
BIS M-371-000-A01				
BIS M-372-000-A01				
BIS M-400-xxx-001				
BIS M-406-045-001				
BIS M-410				
BIS M-411				

Dimensions in mm

	BIS00YA BIS M-132-10/L-HT	BIS00Y7 BIS M-134-10/L-HT	BIS018P BIS M-137-10/L-HT
	HF (13.56 MHz)	HF (13.56 MHz)	HF (13.56 MHz)
	Ø 24.9 x 4.8 mm	Ø 49.8 x 5.3 mm	Ø 49.8 x 5.3 mm
	round	round	round
	4 Byte	4 Byte	4 Byte
	EEPROM	EEPROM	EEPROM
	DIN ISO 14443	DIN ISO 14443	DIN ISO 14443
	736 Byte	736 Byte	736 Byte
	-40...220 °C	-40...220 °C	-40...220 °C
	—	—	—
	-40...85 °C	-40...85 °C	-40...85 °C
	PPS	PPS	PPS
	IP68	IP68	IP68
	metal-free (clear zone)	metal-free (clear zone)	metal-free (clear zone)
	CE, Ecolab	CE, Ecolab	CE
	Page 107	Page 108	Page 110

	flush in metal	on metal	metal-free (clear zone)	flush in metal	on metal	metal-free (clear zone)	flush in metal	on metal	metal-free (clear zone)
			0-40						
			0-30						
						0-24			0-24
						0-24			0-24
			0-15			0-36			0-36
			0-22			0-60			0-60
			0-40						
			0-30						
						0-24			0-24
						0-24			0-24
			0-15			0-36			0-36
			0-22			0-60			0-60

	BIS00Y4 BIS M-135-03/L-HT	
Product Group	HF (13.56 MHz)	
Dimension	51.5 x 6.4 x 51.5 mm	
Antenna type	round	
UID serial number, read-only	8 Byte	
Memory type	EEPROM	
Supported data carrier types	DIN ISO 15693	
User data, read/write	112 Byte	
Storage temperature	-40...220 °C	
Storage temperature temporary	—	
Ambient temperature	-40...85 °C	
Housing material	PPS	
Protection degree	IP68	
Installation	metal-free (clear zone)	
Approval/Conformity	CE, Ecolab	
Productview	Page 109	

Suitable read/write head with max. read/write working distance

Installation	flush in metal	on metal	metal-free (clear zone)	
BIS M-300			0-42	
BIS M-371-000-A01			10-205	
BIS M-372-000-A01			0-300	
BIS M-373-000-A01			0-340	
BIS M-400-xxx-001			0-42	
BIS M-401			0-75	
BIS M-406-045-001			0-42	
BIS M-408-045-001			0-48	
BIS M-410			0-70	
BIS M-411			0-125	
BIS M-4006-001			0-90	
BIS M-4008-001			0-90	
BIS VM-300			0-42	
BIS VM-341-401			0-120	
BIS VM-344-401			0-42	
BIS VM-345-401			0-52	

Dimensions in mm

	BIS018R BIS M-138-03/L-HT	BIS00Y2 BIS M-135-07/L-HT	BIS018T BIS M-138-07/L-HT
	HF (13.56 MHz)	HF (13.56 MHz)	HF (13.56 MHz)
	51.5 x 6.4 x 51.5 mm	51.5 x 6.4 x 51.5 mm	51.5 x 6.4 x 51.5 mm
	round	round	round
	8 Byte	8 Byte	8 Byte
	EEPROM	EEPROM	EEPROM
	DIN ISO 15693	DIN ISO 15693	DIN ISO 15693
	112 Byte	992 Byte	992 Byte
	-40...220 °C	-40...220 °C	-40...220 °C
	—	—	—
	-40...85 °C	-40...85 °C	-40...85 °C
	PPS	PPS	PPS
	IP68	IP68	IP68
	metal-free (clear zone)	metal-free (clear zone)	metal-free (clear zone)
	CE	CE, Ecolab	CE
	Page 110	Page 109	Page 110

	flush in metal	on metal	metal-free (clear zone)	flush in metal	on metal	metal-free (clear zone)	flush in metal	on metal	metal-free (clear zone)
			0-42						
			10-205			10-135			10-135
			0-300			0-190			0-190
			0-340			0-215			0-215
			0-42						
			0-75						
			0-42						
			0-48						
			0-70			23-46			23-46
			0-125			11-75			11-75
			0-90			0-65			0-65
			0-90			0-65			0-65
			0-42						
			0-120						
			0-42						
			0-52						

	BIS00Y1 BIS M-136-03/L-HT	
Product Group	HF (13.56 MHz)	
Dimension	52 x 11.5 x 128 mm	
Antenna type	round	
UID serial number, read-only	8 Byte	
Memory type	EEPROM	
Supported data carrier types	DIN ISO 15693	
User data, read/write	112 Byte	
Storage temperature	-40...220 °C	
Storage temperature temporary	—	
Ambient temperature	-40...85 °C	
Housing material	PPS	
Protection degree	IP68	
Installation	metal-free (clear zone)	
Approval/Conformity	CE, Ecolab	
Productview	Page 109	

Suitable read/write head with max. read/write working distance

Installation	flush in metal	on metal	metal-free (clear zone)	
BIS M-300				
BIS M-352				
BIS M-458-045-001				
BIS M-4006-001			0-95	
BIS M-4006-002				
BIS M-4008-001			0-95	
BIS M-4008-002				
BIS VM-351-401				
BIS VM-352				
BIS VM-355-401				

Dimensions in mm

	BIS0198 BIS M-157-17/A-SA1	BIS00NZ BIS M-191-02/A	BIS0180 BIS M-127-02/A-SA1
	HF (13.56 MHz)	HF (13.56 MHz)	HF (13.56 MHz)
	9 x 5.3 x 39 mm	24 x 21 x 24 mm	40 x 23 x 28 mm
	Rod	Rod	round
	8 Byte	8 Byte	8 Byte
	EEPROM	FRAM	FRAM
	DIN ISO 15693	DIN ISO 15693	DIN ISO 15693
	208 Byte	2000 Byte	2000 Byte
	-25...85 °C	-25...85 °C	-25...85 °C
	120 °C 1x100 h, -40 °C...90 °C 1x1000 h, 140 °C 1x10 h	—	—
	-25...85 °C	-25...70 °C	-25...70 °C
	PEEK	PBT, PU potted	PA 12 Cast aluminum
	IP68	IP67	IP67
	—	metal-free (clear zone)	metal-free (clear zone) on metal flush in metal
	CE, WEEE, EAC	CE	CE
	Page 110	Page 110	Page 111

	flush in metal	on metal	metal-free (clear zone)	flush in metal	on metal	metal-free (clear zone)	Combined with BIS018E		
						0-22			
						0-25			
						0-55			
						0-55			
						0-25			
						0-17			
						0-15			

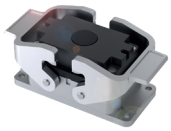

	BIS0176 BIS M-127-02/A	
Product Group	HF (13.56 MHz)	
Dimension	93 x 43.3 x 57.2 mm	
Antenna type	round	
UID serial number, read-only	8 Byte	
Memory type	FRAM	
Supported data carrier types	DIN ISO 15693	
User data, read/write	2000 Byte	
Storage temperature	-25...85 °C	
Storage temperature temporary	—	
Ambient temperature	-25...70 °C	
Housing material	PA 12 Cast aluminum	
Protection degree	IP67	
Installation	metal-free (clear zone) on metal flush in metal	
Approval/Conformity	CE	
Productview	Page 111	

Passender Schreib-/Lesekopf mit max. Arbeitsabstand Lesen/Schreiben

Montage	Combined with BIS0189			
BIS M-300				
BIS M-351				
BIS M-352				
BIS M-451				
BIS M-458-045-001				
BIS M-4006-002				
BIS M-4008-002				
BIS VM-301				

Dimensions in mm

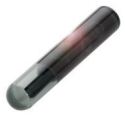
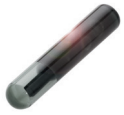
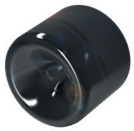

	BIS017F BIS M-157-17/A	BIS00M2 BIS M-152-03/A	BIS00L8 BIS M-106-03/L
	HF (13.56 MHz)	HF (13.56 MHz)	HF (13.56 MHz)
	Ø 2.12 x 12 mm	Ø 4 x 22.2 mm	Ø 18 x 15 mm
	Rod	Rod	round
	8 Byte	8 Byte	8 Byte
	EEPROM	EEPROM	EEPROM
	DIN ISO 15693	DIN ISO 15693	DIN ISO 15693
	208 Byte	112 Byte	112 Byte
	-25...85 °C	-25...85 °C	10...126 °C
	120 °C 1x100 h, -40 °C...90 °C 1x1000 h, 140 °C 1x10 h	120 °C 1x100 h, -40 °C…90 °C 1x1000 h	—
	-25...85 °C	-25...85 °C	10...70 °C
	Glass, transparent	Glass, transparent	Glass
	IP68	IP68	IP68
	metal-free (clear zone)	metal-free (clear zone)	metal-free (clear zone)
	CE	CE	CE
	Page 111	Page 111	Page 111

	flush in metal	on metal	metal-free (clear zone)	flush in metal	on metal	metal-free (clear zone)	flush in metal	on metal	metal-free (clear zone)
									0-32
						0-30			
			0-17			0-17			
						0-30			
						0-18			
						0-35			
						0-35			
									0-32

	BIS00KM BIS M-115-03/A	
Product Group	HF (13.56 MHz)	
Dimension	25 x 3 x 65 mm	
Antenna type	round	
UID serial number, read-only	8 Byte	
Memory type	EEPROM	
Supported data carrier types	DIN ISO 15693	
User data, read/write	112 Byte	
Storage temperature	-30...60 °C	
Storage temperature temporary	—	
Ambient temperature	-25...50 °C	
Housing material	Epoxy-resin/fiberglass PVC	
Protection degree	IP65	
Installation	metal-free (clear zone)	
Approval/Conformity	CE	
Productview	Page 111	

Suitable read/write head with max. read/write working distance

Installation	flush in metal	on metal	metal-free (clear zone)	
BIS M-300			0-18	
BIS M-301			0-38	
BIS M-371-000-A01			0-85	
BIS M-400-xxx-001			0-24	
BIS M-400-xxx-002			0-17	
BIS M-401			0-44	
BIS M-402-xxx-002			0-14	
BIS M-405				
BIS M-406-045-001			0-18	
BIS VM-300			0-18	
BIS VM-344-401			0-18	

Dimensions in mm
* Installation on request

	BIS00N5 BIS M-115-07/A-SA1	BIS01CA BIS M-1L4-03/L-D015	BIS012H BIS M-1L4-03/L-D018
	HF (13.56 MHz)	HF (13.56 MHz)	HF (13.56 MHz)
	25 x 3 x 65 mm	—	1 x 20 x 20 mm
	round	round	round
	8 Byte	8 Byte	8 Byte
	EEPROM	EEPROM	EEPROM
	DIN ISO 15693	DIN ISO 15693	DIN ISO 15693
	992 Byte	112 Byte	112 Byte
	-30...60 °C	-25...85 °C	-20...80 °C
	—	—	—
	-25...50 °C	-25...85 °C	0...50 °C
	Epoxy-resin/fiberglass PVC	PET	PET, transparent
	IP65	IP20	IP20
	metal-free (clear zone)	metal-free (clear zone) on metal	metal-free (clear zone) on metal
	CE	CE, WEEE, EAC	CE
	Page 111	Page 111	Page 111

	flush in metal	on metal	metal-free (clear zone)*	flush in metal	on metal	metal-free (clear zone)	flush in metal	on metal*	metal-free (clear zone)
									0-18

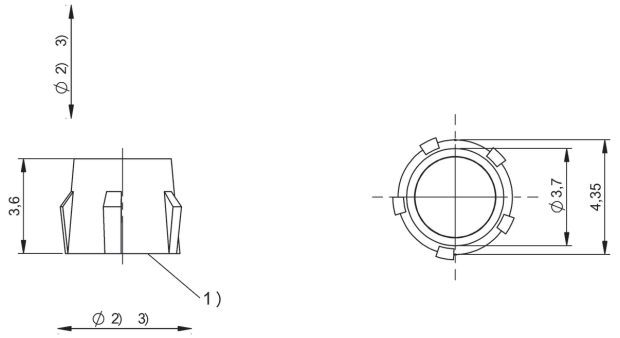

1) Sensing surface, 2) Clear zone, 3) see corresponding R/W head

BIS018Y

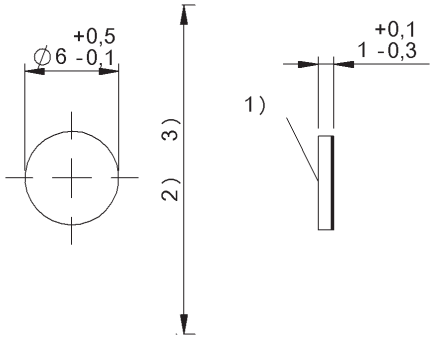

1) Sensing surface, 2) Clear zone, 3) see corresponding R/W head

BIS00UC, BIS00UE

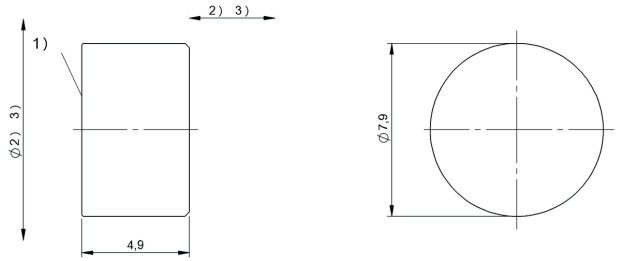

1) Sensing surface, 2) Clear zone, 3) see corresponding R/W head

BIS00YL, BIS00YJ, BIS00YK

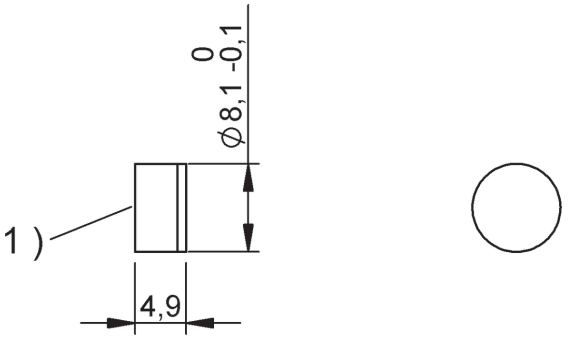

1) Sensing surface

BIS01A1

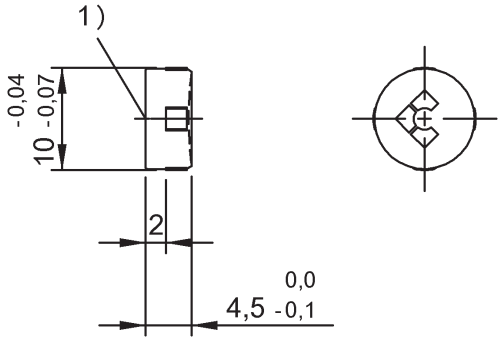

1) Sensing surface

BIS01A0, BIS0048, BIS004A

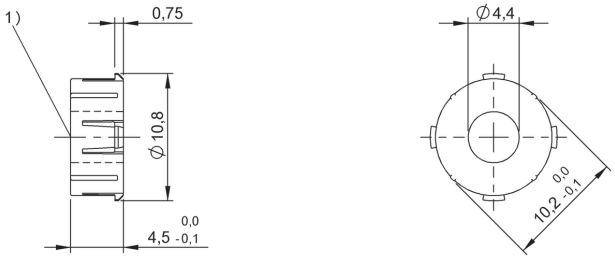

1) Sensing surface

BIS019C

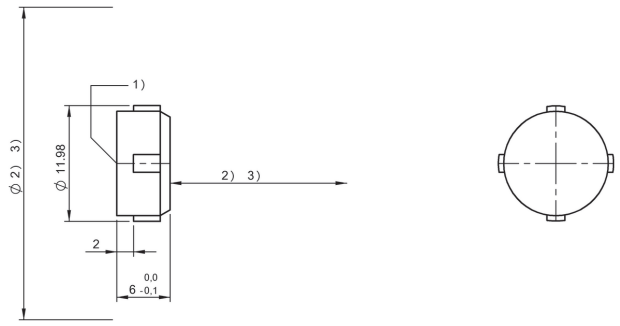

1) Sensing surface, 2) Clear zone, 3) see corresponding R/W head

BIS0040

1) Sensing surface

BIS0042

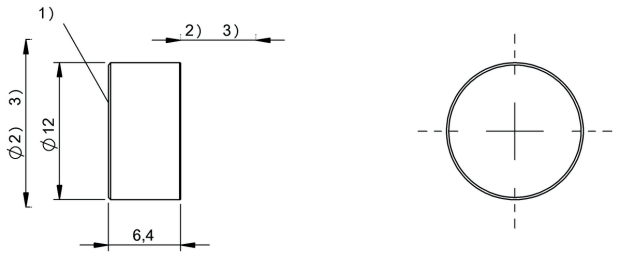

1) Sensing surface, 2) Clear zone, 3) see corresponding R/W head

BIS00YH

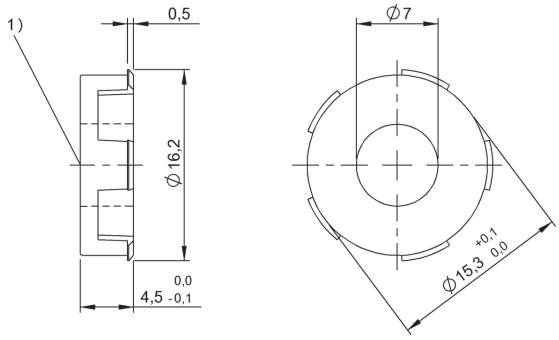

1) Sensing surface

BIS019E

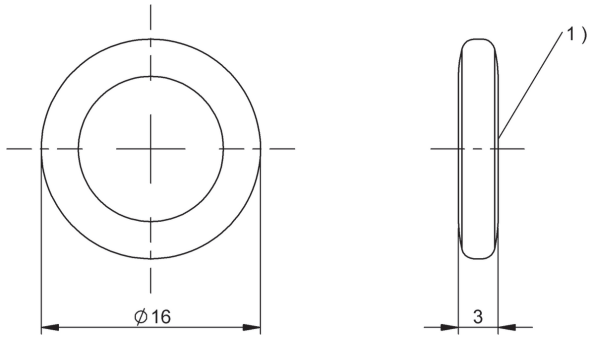

1) Sensing surface

BIS01CE

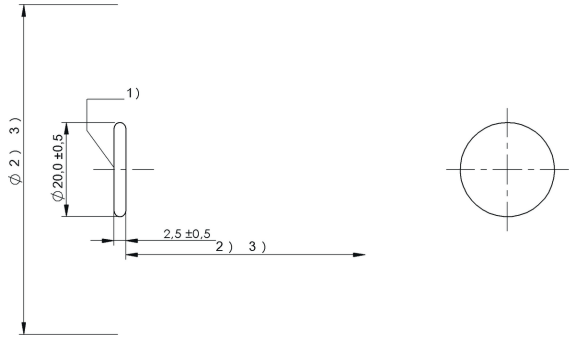

1) Sensing surface, 2) Clear zone, 3) see corresponding R/W head

BIS0044

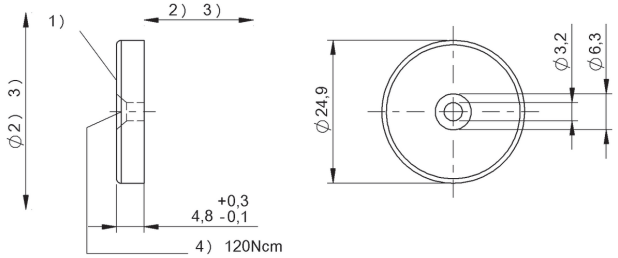

1) Sensing surface, 2) Clear zone, 3) see corresponding R/W head, 4) Tightening torque

BIS00YF, BIS00YC, BIS00YE, BIS00YA

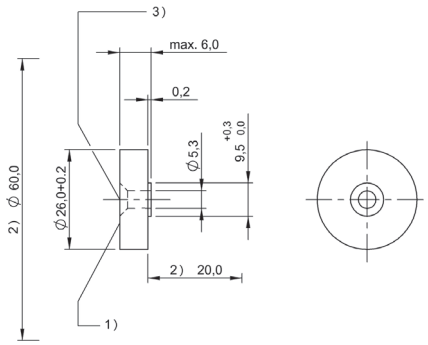

1) Sensing surface, 2) Clear zone, 3) Tightening torque max. 2.5 Nm

BIS0143

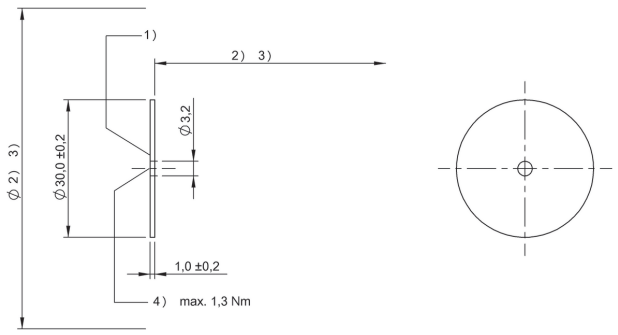

1) Sensing surface, 2) Clear zone, 3) see corresponding R/W head, 4) Tightening torque

BIS003Y

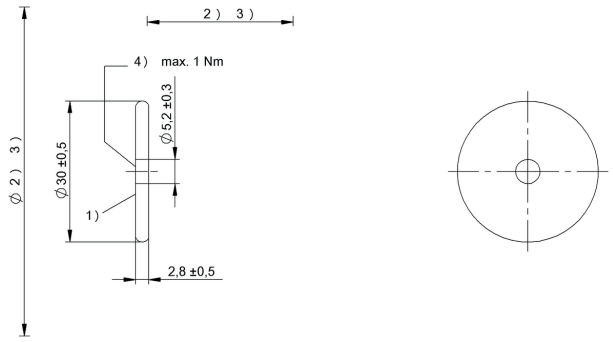

1) Sensing surface, 2) Clear zone, 3) see corresponding R/W head, 4) Tightening torque

BIS0045

Do you need more details? Our Product Finder at www.balluff.com provides you with product-specific information, including technical drawings, data sheets, user guides and more for each individual product. All items are available for download.

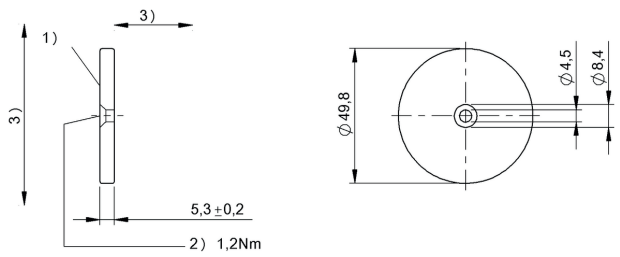

1) Sensing surface, 2) Tightening torque, 3) see R/W head table

BIS00Y8, BIS00Y7

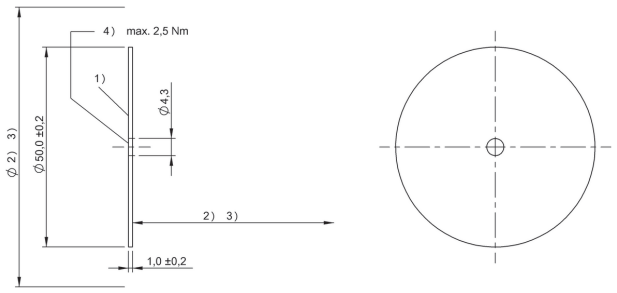

1) Sensing surface, 2) Clear zone, 3) see corresponding R/W head, 4) Tightening torque

BIS003Z

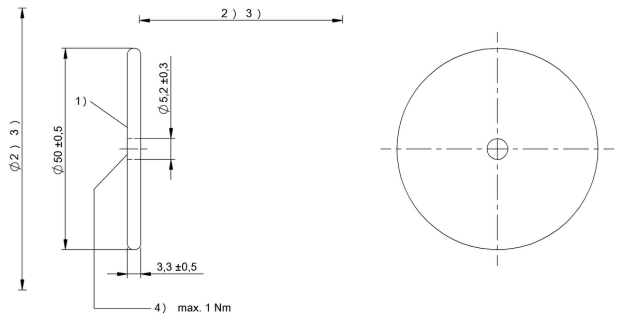

1) Sensing surface, 2) Clear zone, 3) see corresponding R/W head, 4) Tightening torque

BIS0046

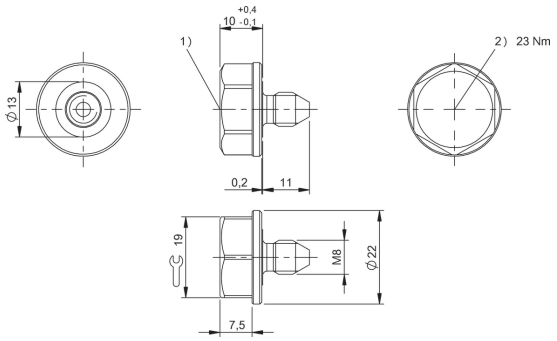

1) Sensing surface, 2) Tightening torque

BIS00NW

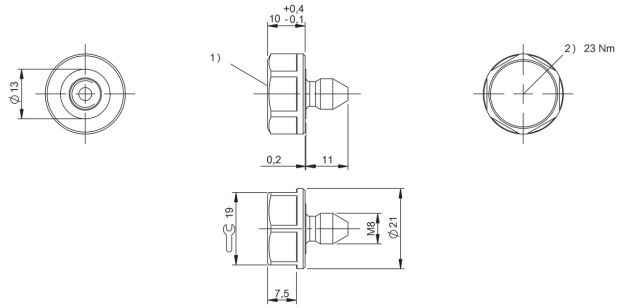

1) Sensing surface, 2) Tightening torque

BIS0100

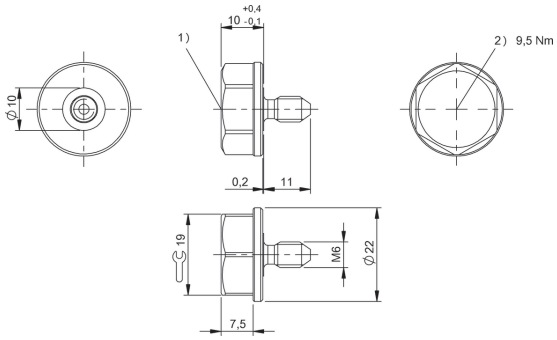

1) Sensing surface, 2) Tightening torque

BIS00NU

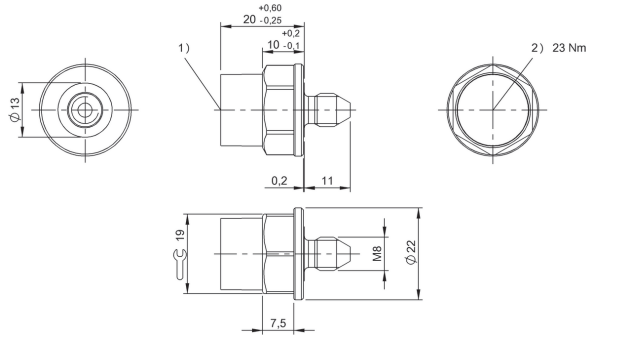

1) Sensing surface, 2) Tightening torque

BIS00M8

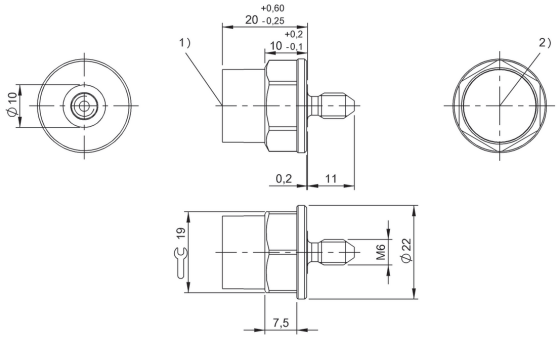

1) Sensing surface, 2) Tightening torque

BIS00M9

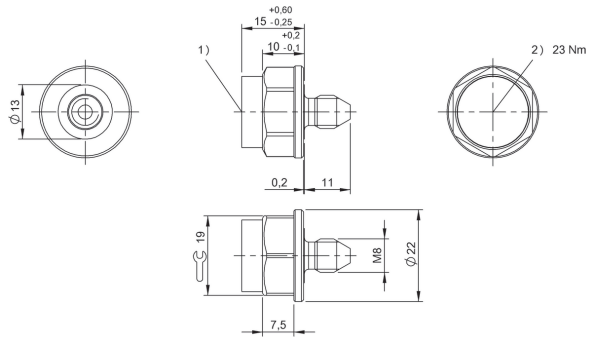

1) Sensing surface, 2) Tightening torque

BIS0119

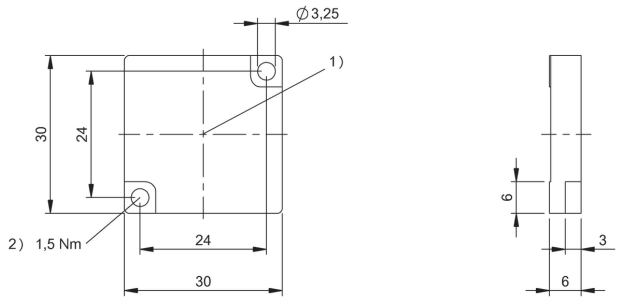

1) Sensing surface, 2) Tightening torque

BIS004E

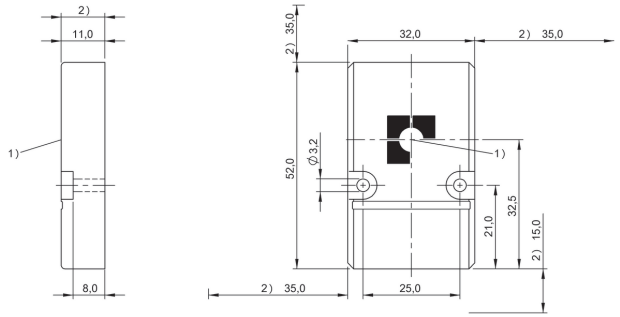

1) Sensing surface, 2) Clear zone

BIS0043, BIS011F, BIS0111, BIS011E, BIS011A

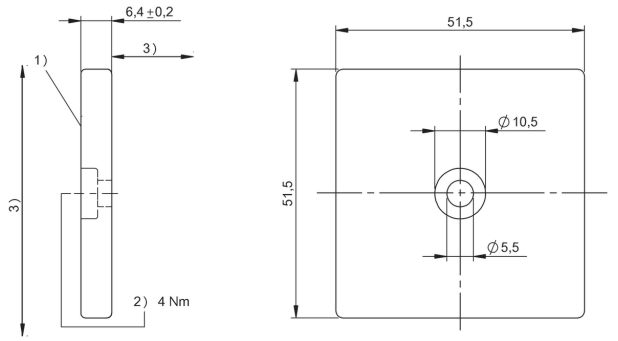

1) Sensing surface, 2) Tightening torque, 3) see R/W head table

BIS00Y5, BIS00Y3, BIS00Y6, BIS00Y4, BIS00Y2

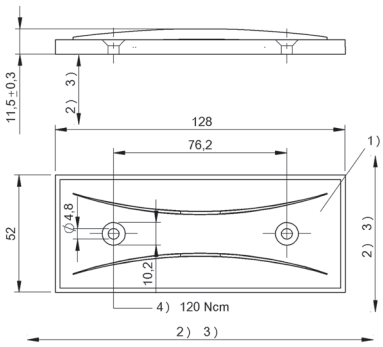

1) Sensing surface, 2) Clear zone, 3) see corresponding R/W head, 4) Tightening torque

BIS00W9, BIS00Y1

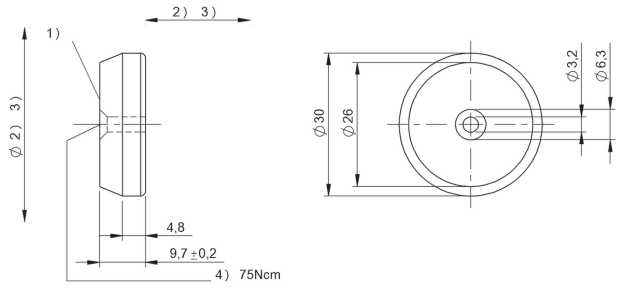

1) Sensing surface, 2) Clear zone, 3) see corresponding R/W head, 4) Tightening torque

BIS00Y9

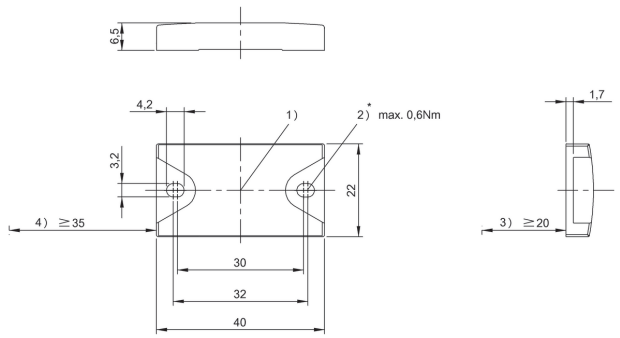

1) Sensing surface, 2) Tightening torque, 3) Clear zone, 4) Clear zone surrounding

BIS00LC

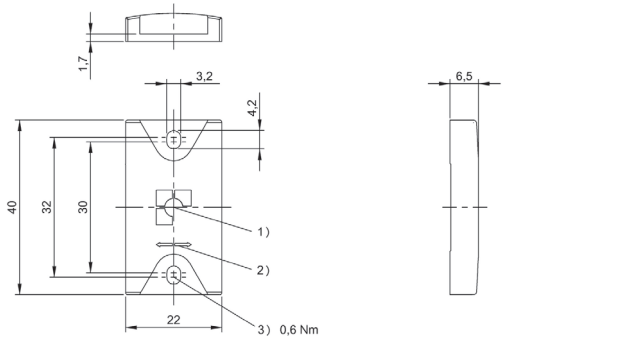

1) Sensing surface, 2) Read/write axis, 3) Tightening torque

BIS004F

Do you need more details? Our Product Finder at www.balluff.com provides you with product-specific information, including technical drawings, data sheets, user guides and more for each individual product. All items are available for download.

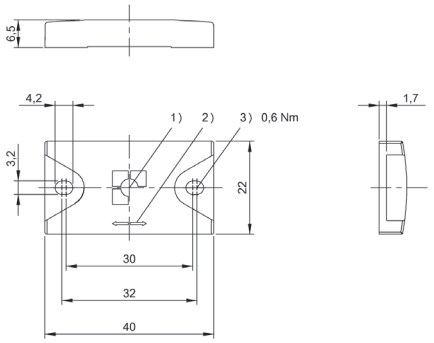

1) Sensing surface, 2) Read/write axis, 3) Tightening torque

BIS004H

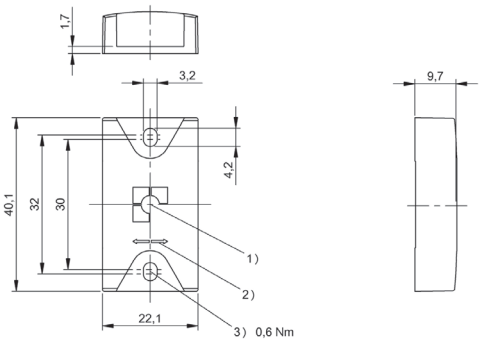

1) Sensing surface, 2) Read/write axis, 3) Tightening torque

BIS011M, BIS011Z, BIS011N

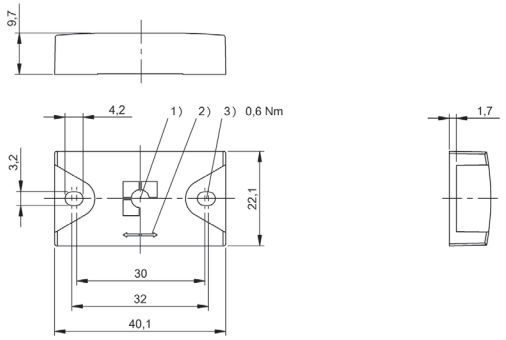

1) Sensing surface, 2) Read/write axis, 3) Tightening torque

BIS012J, BIS0112, BIS012K, BIS012L

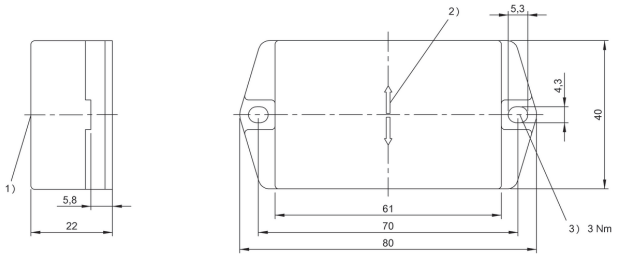

1) Sensing surface, 2) Read/write axis, 3) Tightening torque

BIS00P3, BIS011W, BIS011Y, BIS011U

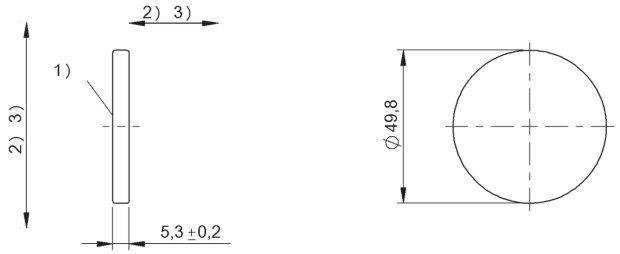

1) Sensing surface, 2) Clear zone, 3) see R/W head table

BIS018P

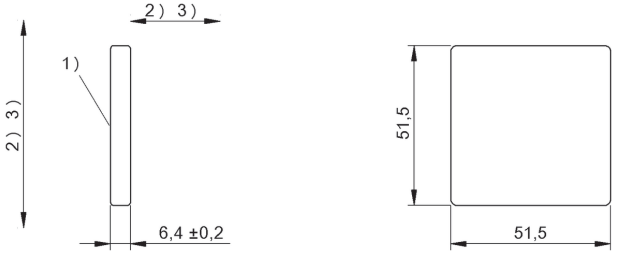

1) Sensing surface, 2) Clear zone, 3) see R/W head table

BIS018R, BIS018T

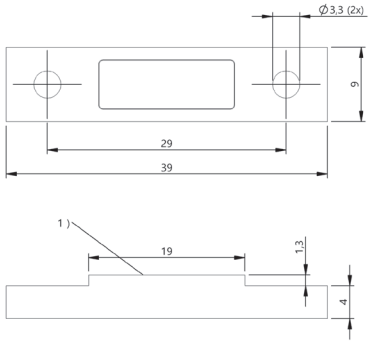

1) Sensing surface

BIS0198

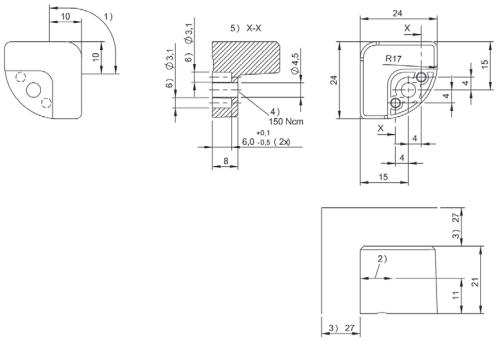

1) Read/write range, 2) Read/write axis, 3) Clear zone, 4) Tightening torque, 5) Cut-out, 6) see remarks

BIS00NZ

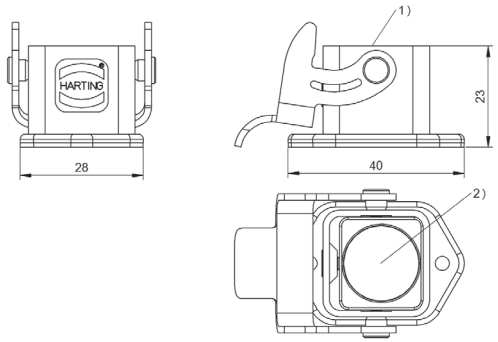

1) Sensing surface, 2) Data carrier

BIS0180

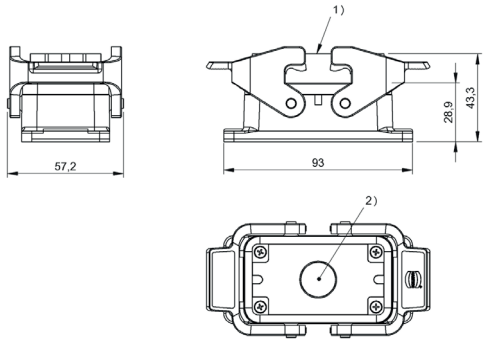

1) Sensing surface, 2) Data carrier

BIS0176

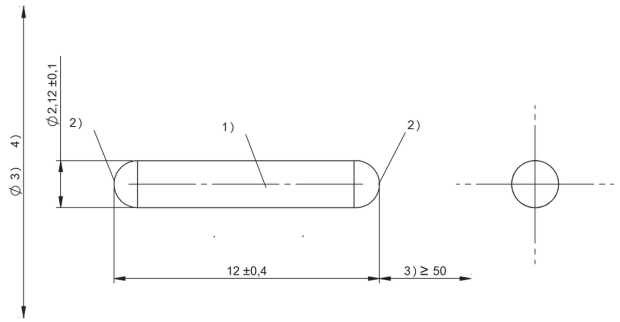

1) Sensing surface parallel, 2) Sensing surface axial, 3) Clear zone, 4) see corresponding R/W head

BIS017F

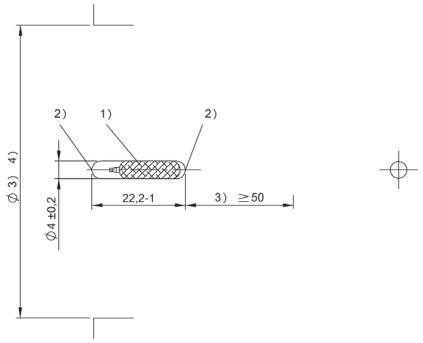

1) Sensing surface parallel, 2) Sensing surface axial, 3) Clear zone, 4) see corresponding R/W head

BIS00M2

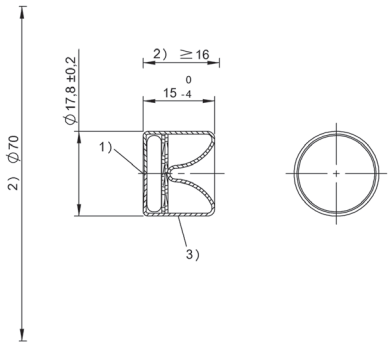

1) Sensing surface, 2) Clear zone, 3) Glass

BIS00L8

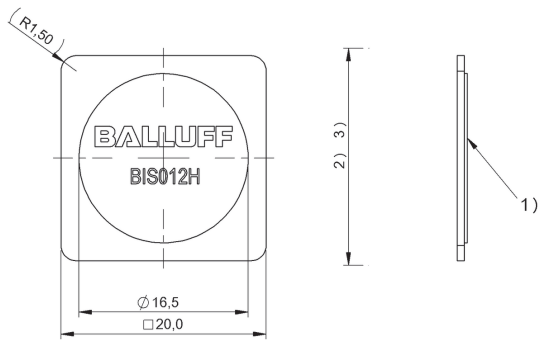

1) Sensing surface, 2) Clear zone, 3) see corresponding R/W head

BIS012H

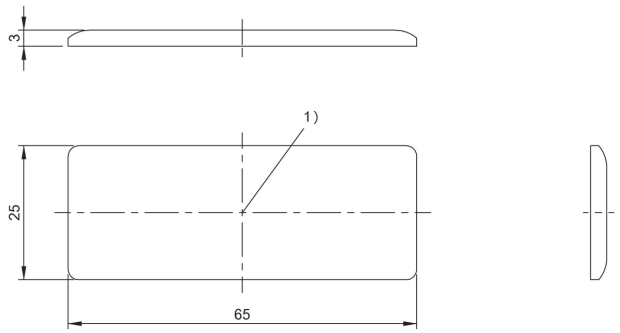

1) Sensing surface

BIS00KM, BIS00N5

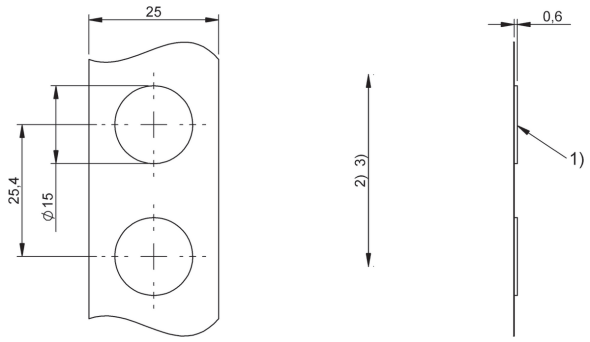

1) Sensing surface, 2) Clear zone, 3) see corresponding R/W head

BIS01CA

For processor units BIS V-6...	**BIS0197** BIS VM-349-401-S4
Product Group	HF (13.56 MHz)
Dimension	20 x 8 x 32 mm
Installation	metal-free (clear zone) on metal flush in metal
Antenna type	round
Supported data carrier types	DIN ISO 15693, DIN ISO 15693 (High Memory)
Connection	Male, 4-pin
Housing material	Zinc, die-cast
Ambient temperature	0...80 °C
Protection degree	IP67
Approval/Conformity	CE, FCC Part 15, IC RSS-210, UL Listed

Appropriate data carrier

	BIS0042			BIS0043			BIS0044		BIS0045			BIS018Y		
Data carrier distance to metal	>20	>0	>0	>20	>0	>0	>25	>0	>25			>20	>0	
Data carrier clear zone	>100	>100	>0	>100	>100	>0	>100	>100	>100			>100	>100	
Working distance for writing	0-10	0-9.5	0-7	0-13	0-9.5	0-7	0-12	0-5	3-13			0-6	0-5.5	
Working distance for reading	0-10	0-9.5	0-7	0-13	0-9.5	0-7	0-12	0-5	3-13			0-6	0-5.5	
Offset at distance														
0	±5	±5	±5	±9	±8	±7	±7	±5			0	±5	±4	
2	±5	±5	±5	±9	±8	±7	±7	±5			2	±5	±4	
4	±5	±5	±4.5	±9	±8	±6	±7	±4	±9		2.5	±4	±3.5	
5	±4.5	±4	±4	±9	±7	±5	±7	±2	±9		3	±4	±3.5	
6	±4.5	±4	±4	±8	±7	±5	±6		±8		4	±4	±3.5	
7	±4.5	±4	±2	±8	±7	±1.5	±6		±8		5	±4	±2	
8	±4.5	±4		±8	±7		±6		±8		5.5	±2	±2	
9	±2	±2		±8	±4		±6		±8		6	±2		
9.5	±2	±2		±8	±4		±6		±8		6.5			
10	±1			±8			±6		±8		7			
12				±3			±3		±3		8			
13				±3					±3		9			
15											9.5			
20											10			

Dimensions in mm

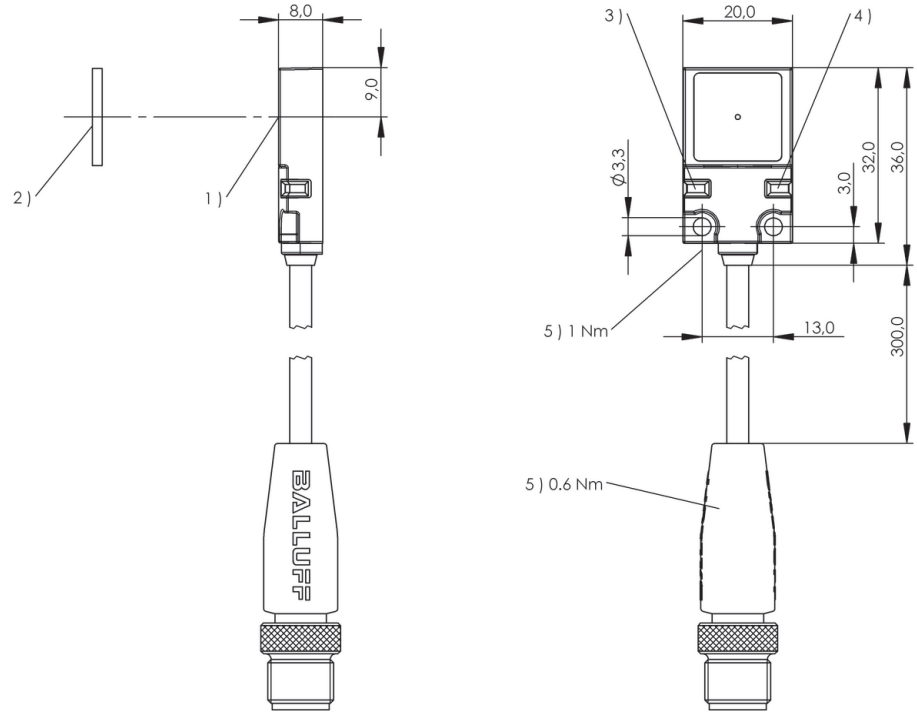

1) Sensing surface, 2) Data carrier, 3) LED (Power), 4) LED (CP), 5) Tightening torque

	BIS00UC			BIS004A			BIS00NU BIS00NW BIS0100	
	>20	>0	>0	>20	>0	>0	>0	
	>100	>100	>0	>100	>100	>0	>100	
	0-6.5	0-4	1.3-2.5	0-8	0-8	0-6	0-10	
	0-6.5	0-4	1.3-2.5	0-8	0-8	0-6	0-10	
	±4	±4		±5	±4.5	±4	±6	
	±4	±4	±2	±5	±4.5	±4	±6	
	±3	±3	±0.5	±5	±4.5	±3	±6	
	±3	±3		±5	±4.5	±3	±6	
	±3	±2		±5	±4.5	±3	±6	
	±3			±4	±4	±3	±5	
	±2			±4	±4	±2	±5	
	±2			±4	±4	±2	±5	
	±2			±4	±4		±5	
				±4	±4		±5	
				±2	±2		±5	
							±3	
							±3	
							±3	

Do you need more details? Our Product Finder at www.balluff.com provides you with product-specific information, including technical drawings, data sheets, user guides and more for each individual product. All items are available for download.

For processor units BIS V-6...	**BIS0133** BIS VM-345-401-S4
Product Group	HF (13.56 MHz)
Dimension	40 x 15 x 105 mm
Installation	metal-free (clear zone)
Antenna type	round
Supported data carrier types	DIN ISO 15693, DIN ISO 15693 (High Memory)
Connection	Male, 4-pin
Housing material	Zinc, die-cast
Ambient temperature	0...70 °C
Protection degree	IP67
Approval/Conformity	CE, UL-FILE E227256, Vol.X1, BIS, FCC, IC

Appropriate data carrier

	BIS0043 BIS0111	BIS011F BIS011E BIS011A BIS0139	BIS004A		BIS00YE	BIS00Y4		BIS0044		BIS0045	BIS0046		BIS0119	BIS00NU BIS00NW BIS0100
Data carrier distance to metal	>50	>50	>10	>0	>25	>50		>50	>0	>50	>50		>0	>0
Data carrier clear zone	>200	>200	>60	>60	>100	>200		>200	>200	>200	>200		>100	>100
Working distance for writing	0-28	0-18	0-11	0-9	0-34	0-52		0-22	0-5	0-28	0-45		0-22	0-16
Working distance for reading	0-28	0-18	0-11	0-9	0-34	0-52		0-22	0-5	0-28	0-45		0-22	0-16
Offset at distance														
0	±16	±14	±8	±8	±20	±30	0	±14	±7	±16	±26	0	±13	±10
4	±16	±14	±8	±8	±20	±30	4	±14	±6	±16	±26	5	±13	±10
8	±16	±14	±7	±6	±20	±30	5	±14	±3	±16	±26	10	±13	±9
9	±16	±14	±7	±4	±20	±30	10	±14		±16	±26	13	±10	±8
10	±16	±14	±7		±20	±30	15	±12		±14	±26	16	±10	±4
11	±14	±11	±4		±18	±30	18	±10		±14	±26	18	±10	
15	±14	±11			±18	±30	20	±10		±14	±26	20	±10	
18	±14	±5			±18	±30	22	±6		±12	±24	22	±6	
22	±12				±15	±28	24			±12	±24	24		
25	±12				±15	±28	28			±9	±24	28		
28	±9				±15	±28	30				±24	30		
32					±8	±28	31				±24	31		
35						±28	35				±24	35		
40						±28	40				±24	40		
42						±24	43				±15	43		
45						±24	45				±15	45		
48						±24	48					48		
50						±24	52					52		
52						±10	60					60		

Dimensions in mm

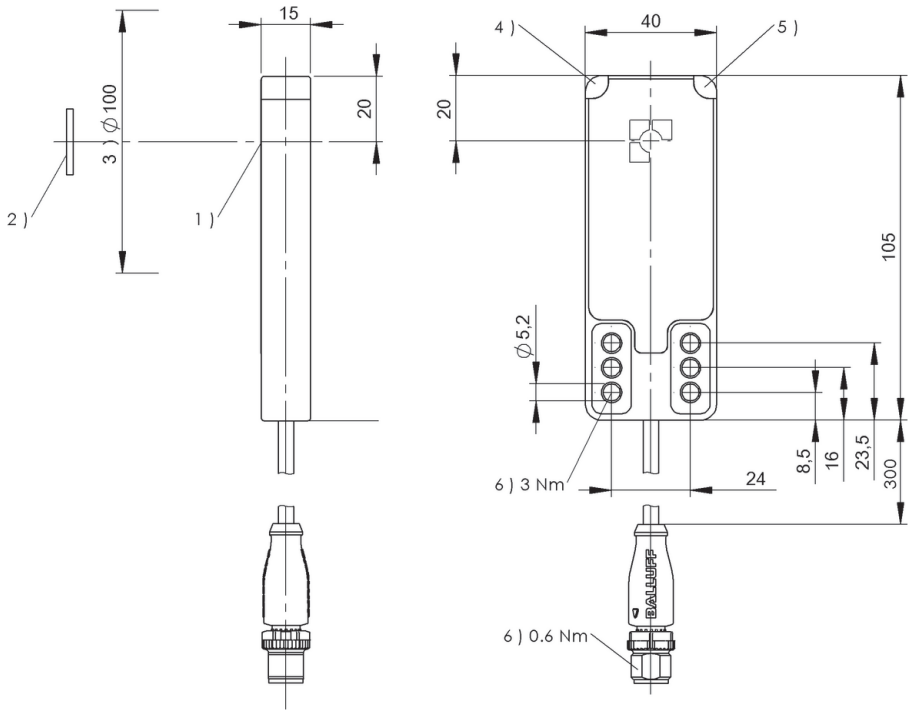

1) Sensing surface, 2) Data carrier, 3) Clear zone, 4) LED (Power), 5) LED (CP), 6) Tightening torque

Do you need more details? Our Product Finder at www.balluff.com provides you with product-specific information, including technical drawings, data sheets, user guides and more for each individual product. All items are available for download.

For processor units BIS V-6...	**BIS0131** BIS VM-355-401-S4
Product Group	HF (13.56 MHz)
Dimension	40 x 15 x 105 mm
Installation	metal-free (clear zone)
Antenna type	Rod
Supported data carrier types	DIN ISO 15693, DIN ISO 15693 (High Memory)
Connection	Male, 4-pin
Housing material	Zinc, die-cast
Ambient temperature	0...70 °C
Protection degree	IP67
Approval/Conformity	CE, UL-FILE E227256, Vol.X1, BIS, FCC, IC

Appropriate data carrier

	BIS004F				BIS004H					BIS00M2		BIS00P3			
Data carrier clear zone A	>200	>200	>200	>200	>200	>200	>200	>200		>200	>200	>240	>240	>240	>240
Data carrier clear zone B	>200	>200	>200	>200	>200	>200	>200	>200		>200	>200	>480	>480	>480	>480
Data carrier clear zone C										>50	>50	>50	>50	>0	>0
Metallic mounting surface 40 × 22 mm	0-45	0-45			0-45	0-45									
Metallic mounting surface > 200 × 200 mm			0-45	0-45			0-45	0-45							
Working distance for writing	0-45	0-45	0-45	0-45	0-45	0-45	0-45	0-45		0-25	0-25	0-60	0-60	0-60	0-60
Working distance for reading	0-45	0-45	0-45	0-45	0-45	0-45	0-45	0-45		0-25	0-25	0-60	0-60	0-60	0-60
Offset at distance	X	Y	X	Y	X	Y	X	Y		X	Y	X	Y	X	Y
0	±50	±24	±50	±24	±24	±50	±24	±50	0	±32	±16	±80	±36	±80	±36
5	±50	±24	±50	±24	±24	±50	±24	±50	5	±32	±16	±80	±36	±80	±36
12	±50	±24	±50	±24	±24	±50	±24	±50	10	±32	±16	±80	±36	±80	±36
15	±50	±24	±50	±24	±24	±50	±24	±50	13	±30	±14	±80	±36	±80	±36
18	±50	±24	±50	±24	±24	±50	±24	±50	15	±30	±14	±80	±36	±80	±36
20	±50	±24	±50	±24	±24	±50	±24	±50	20	±30	±14	±80	±36	±80	±36
22	±40	±20	±40	±20	±20	±40	±20	±40	25	±15	±8	±75	±30	±75	±30
25	±40	±20	±40	±20	±20	±40	±20	±40	30			±75	±30	±75	±30
30	±40	±20	±40	±20	±20	±40	±20	±40	36			±75	±30	±75	±30
32	±40	±20	±40	±20	±20	±40	±20	±40	40			±75	±30	±75	±30
35	±40	±20	±40	±20	±20	±40	±20	±40	42			±75	±30	±75	±30
40	±38	±18	±38	±18	±18	±38	±18	±38	50			±75	±30	±75	±30
45	±20	±10	±20	±10	±10	±20	±10	±20	52			±55	±25	±55	±25
50									60			±20	±10	±20	±10
52									75						
60									83						
65									100						

Dimensions in mm

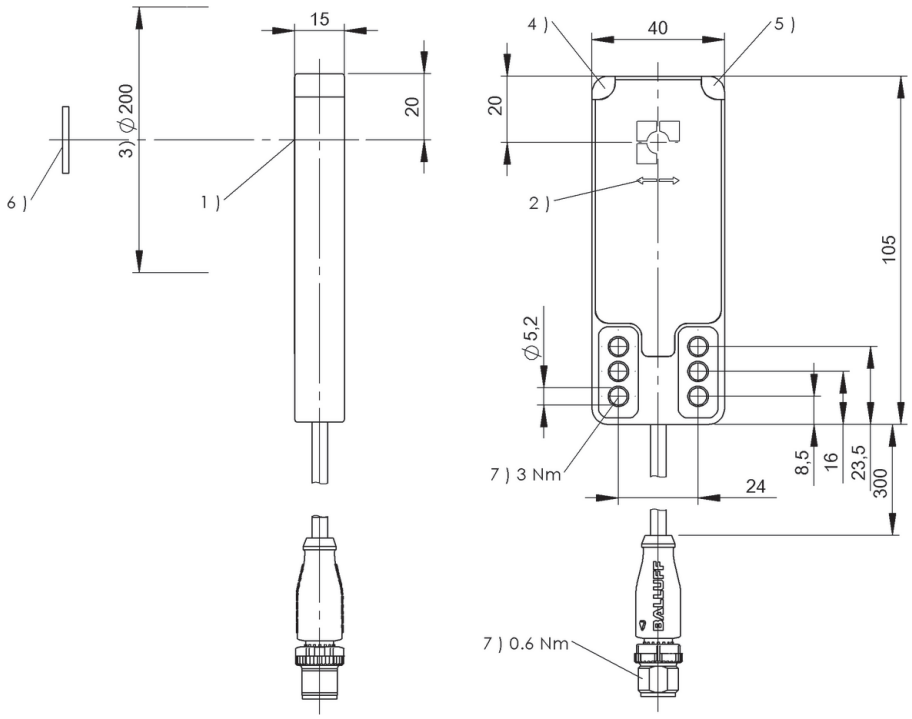

1) Sensing surface, 2) Read/write axis, 3) Clear zone, 4) LED (Power), 5) LED (CP), 6) Data carrier, 7) Tightening torque

BIS011W BIS011Y BIS011U		BIS017F			BIS011M BIS011Z BIS011N				BIS012J BIS012K BIS012L					BIS0112					BIS00NZ	
>240	>240	>200	>200		>200	>200	>200	>200	>200	>200	>200	>200		>200	>200	>200	>200		>27	>27
>480	>480	>200	>200		>200	>200	>200	>200	>200	>200	>200	>200		>200	>200	>200	>200		>27	>27
>50	>50	>50	>50																	
					0-34	0-34			0-30	0-30				0-45	0-45					
							0-34	0-34			0-30	0-30				0-45	0-45			
0-36	0-36	0-15	0-15		0-34	0-34	0-34	0-34	0-30	0-30	0-30	0-30		0-45	0-45	0-45	0-45		0-25	0-25
0-36	0-36	0-15	0-15		0-34	0-34	0-34	0-34	0-30	0-30	0-30	0-30		0-45	0-45	0-45	0-45		0-25	0-25
X	Y	X	Y		X	Y	X	Y	X	Y	X	Y		X	Y	X	Y		X	Y
±50	±26	±20	±11	0	±38	±18	±40	±18	±20	±40	±20	±40	0	±24	±55	±20	±48	0	±30	±20
±50	±26	±20	±11	5	±38	±18	±40	±18	±20	±40	±20	±40	5	±24	±55	±20	±48	5	±30	±20
±50	±26	±17	±9	10	±38	±18	±40	±18	±20	±40	±20	±40	10	±24	±55	±20	±48	10	±30	±20
±50	±26	±14	±7	15	±38	±18	±40	±18	±17	±38	±17	±38	15	±24	±55	±20	±48	15	±25	±15
±50	±26	±8	±3	18	±35	±15	±40	±18	±17	±38	±17	±38	20	±24	±55	±20	±48	20	±15	±10
±50	±26			20	±35	±15	±40	±18	±17	±38	±17	±38	25	±20	±50	±16	±38	25	±5	±5
±40	±20			22	±35	±15	±35	±16	±15	±30	±15	±30	30	±20	±50	±16	±38	27		
±35	±17			25	±35	±15	±35	±16	±7	±16	±7	±16	35	±20	±50	±16	±38	35		
±20	±10			30	±27	±12	±35	±16	±7	±16	±7	±16	40	±18	±40	±16	±38	40		
				34	±15	±8	±15	±8					45	±10	±20	±10	±20	42		
				36									50					50		
				39									54					57		
				42									56					60		
				50									60					65		
				52									70					70		
				60									75					75		
				65									80							

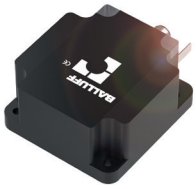

For processor units BIS V-6...	**BIS00T0** BIS VM-301-001-S4
Product Group	HF (13.56 MHz)
Dimension	80 x 40 x 84.5 mm
Installation	metal-free (clear zone)
Antenna type	round
Supported data carrier types	DIN ISO 14443, DIN ISO 15693
Connection	Male, 4-pin
Housing material	PBT
Ambient temperature	0...70 °C
Protection degree	IP67
Approval/Conformity	CE, UL-FILE E227256, Vol.X1, BIS

Appropriate data carrier

	BIS003Y			BIS003Z			BIS0043		BIS0044		BIS0045		BIS0046		BIS0047		BIS00L8		BIS0111	
Data carrier distance to metal	>50	>10	>5	>50	>25	>10	>50	>20	>50	>30	>50	>30	>50	>30	>80		>1	0	>50	
Data carrier clear zone	>200	>60	>50	>200	>150	>150	>200	>60	>200	>100	>200	>100	>200	>100	>250		>70	>70	>200	
Working distance for writing	0-34	0-20	0-15	0-45	0-43	0-35	0-45	8-22	0-32	0-20	0-45	0-30	0-70	0-45	0-50		0-32	0-32	0-50	
Working distance for reading	0-34	0-20	0-15	0-45	0-43	0-35	0-45	8-22	0-32	0-20	0-45	0-30	0-70	0-45	0-50		0-32	0-32	0-50	
Offset at distance																				
0	±22	±18	±14	±30	±24	±18	±32	±20	±28	±20	±32	±22	±40	±25	±30		±30	±25	±30	
5	±22	±18	±14	±30	±24	±18	±32	±20	±28	±20	±32	±22	±40	±25	±30		±30	±25	±30	
9	±22	±18	±14	±30	±24	±18	±32	±20	±28	±18	±32	±22	±40	±25	±30		±30	±25	±30	
12	±22	±18	±10	±30	±24	±18	±32	±18	±24	±18	±32	±22	±40	±25	±30		±25	±25	±30	
15	±22	±18	±10	±30	±24	±18	±32	±18	±24	±15	±32	±20	±40	±25	±30		±25	±25	±30	
16	±22	±16	±8	±30	±24	±18	±32	±18	±24	±15	±32	±20	±40	±25	±30		±25	±25	±30	
18	±22	±16	±6	±30	±24	±18	±32	±16	±24	±12	±32	±18	±40	±25	±30		±25	±22	±30	
20	±22	±16	±4	±30	±24	±18	±32	±16	±24	±8	±32	±16	±40	±25	±30		±25	±22	±30	
22	±20	±10		±30	±24	±15	±25	±14	±20		±25	±14	±40	±22	±30		±25	±22	±25	
25	±15	±10		±30	±24	±15	±25		±20		±25	±12	±40	±22	±30		±25	±22	±25	
30	±15	±4		±30	±20	±12	±25		±12		±25	±10	±40	±22	±28		±20	±17	±25	
32	±8			±30	±18	±8	±20		±12		±20		±40	±22	±24		±20	±17	±25	
35	±4			±30	±16	±4	±20				±20		±40	±20	±22				±25	
40				±24	±10		±20				±20		±40	±20	±18				±25	
43				±20	±4		±12				±12		±35	±15	±14				±25	
45				±16			±12				±12		±35	±12	±12				±25	
50				±4									±35		±4				±5	
52													±35							
60													±30							
65													±30							
70													±20							

Dimensions in mm

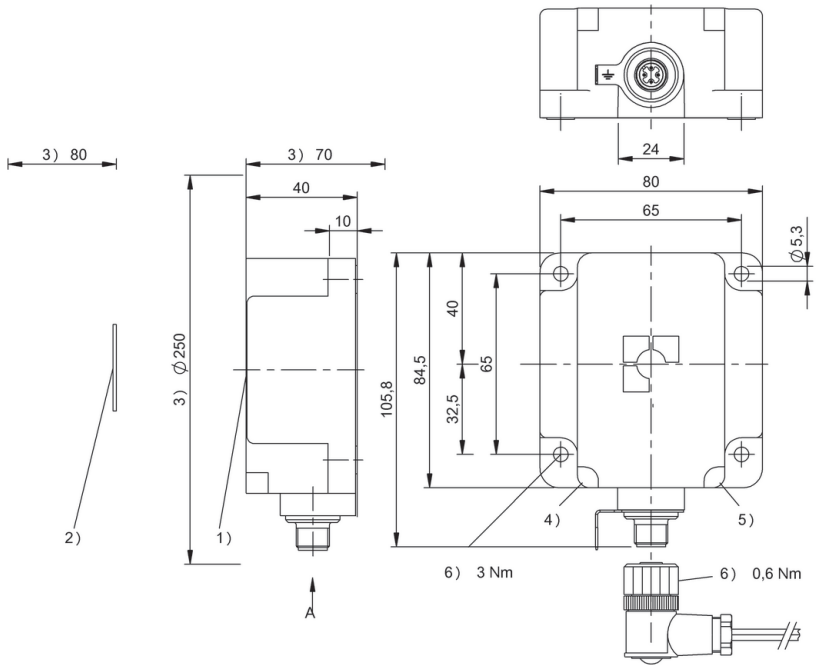

1) Sensing surface, 2) Data carrier, 3) Clear zone, 4) LED (Power), 5) LED (CP), 6) Tightening torque

Do you need more details? Our Product Finder at www.balluff.com provides you with product-specific information, including technical drawings, data sheets, user guides and more for each individual product. All items are available for download.

For processor units BIS V-6...	**BIS0130** BIS VM-341-401-S4
Product Group	HF (13.56 MHz)
Dimension	80 x 40 x 84.5 mm
Installation	metal-free (clear zone)
Antenna type	round
Supported data carrier types	DIN ISO 15693, DIN ISO 15693 (High Memory)
Connection	Male, 4-pin
Housing material	PBT
Ambient temperature	0...70 °C
Protection degree	IP67
Approval/Conformity	CE, UL-FILE E227256, Vol.X1, BIS

Appropriate data carrier

	BIS0043			**BIS011F** **BIS011E** **BIS011A** **BIS0139**			**BIS0046**		**BIS00Y4**			**BIS0119**	
Data carrier distance to metal	>50	>0	>0	>50	>0	>0	>50		>50			>0	
Data carrier clear zone	>200	>200	>0	>200	>200	>0	>200		>200			>100	
Working distance for writing	0-64	0-36	14-20	0-42	0-30	11-20	0-100		0-120			0-40	
Working distance for reading	0-64	0-36	14-20	0-42	0-30	11-20	0-100		0-120			0-40	
Offset at distance													
0	±40	±25		±30	±24		±50		±60		0	±30	
8	±40	±25		±30	±24		±50		±60		5	±30	
11	±40	±25		±30	±24	±25	±50		±60		10	±30	
14	±40	±25	±20	±30	±24	±25	±50		±60		12	±25	
16	±40	±25	±20	±30	±24	±9	±50		±60		15	±25	
18	±40	±25	±10	±30	±24	±9	±50		±60		16	±25	
20	±40	±25	±10	±30	±24	±9	±50		±60		18	±25	
25	±36	±22		±25	±20		±50		±60		20	±25	
30	±36	±22		±25	±10		±50		±60		22	±25	
36	±36	±10		±25			±50		±60		25	±25	
40	±36			±25			±50		±60		30	±25	
42	±30			±5			±50		±60		32	±20	
50	±30						±50		±60		36	±20	
60	±30						±45		±55		40	±15	
64	±15						±45		±55		43		
80							±45		±55		45		
90							±45		±55		50		
100							±20		±55		52		
110									±40		60		
120									±40		65		

Dimensions in mm

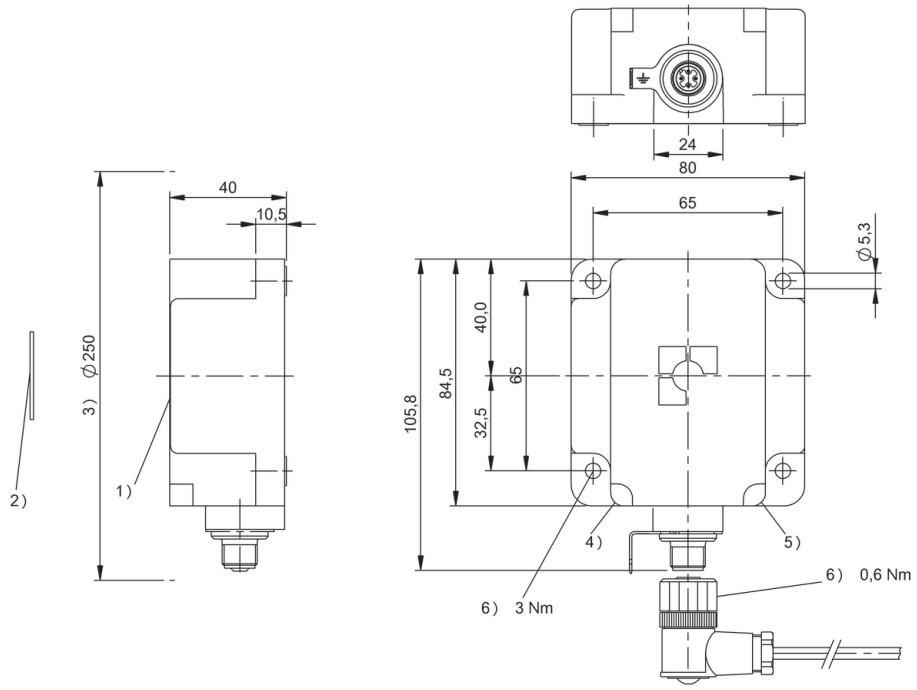

1) Sensing surface, 2) Data carrier, 3) Clear zone, 4) LED (Power), 5) LED (CP), 6) Tightening torque

Do you need more details? Our Product Finder at www.balluff.com provides you with product-specific information, including technical drawings, data sheets, user guides and more for each individual product. All items are available for download.

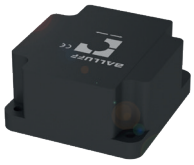

For processor units BIS V-6...	**BIS012Z** BIS VM-351-401-S4
Product Group	HF (13.56 MHz)
Dimension	80 x 40 x 84.5 mm
Installation	metal-free (clear zone)
Antenna type	Rod
Supported data carrier types	DIN ISO 15693, DIN ISO 15693 (High Memory)
Connection	Male, 4-pin
Housing material	PBT
Ambient temperature	0...70 °C
Protection degree	IP67
Approval/Conformity	CE, UL-FILE E227256, Vol.X1, BIS

Appropriate data carrier

	BIS004F				**BIS004H**					**BIS00M2**		**BIS00P3**			
Data carrier clear zone A	>200	>200	>200	>200	>200	>200	>200	>200		>200	>200	>240	>240	>240	>240
Data carrier clear zone B	>200	>200	>200	>200	>200	>200	>200	>200		>200	>200	>480	>480	>480	>480
Data carrier clear zone C										>50	>50	>50	>50	>0	>0
Metallic mounting surface 40 × 22 mm	0-52	0-52			0-52	0-52									
Metallic mounting surface > 200 × 200 mm			0-52	0-52			0-52	0-52							
Working distance for writing	0-52	0-52	0-52	0-52	0-52	0-52	0-52	0-52		0-36	0-36	0-100	0-100	0-100	0-100
Working distance for reading	0-52	0-52	0-52	0-52	0-52	0-52	0-52	0-52		0-36	0-36	0-100	0-100	0-100	0-100
Offset at distance	X	Y	X	Y	X	Y	X	Y		X	Y	X	Y	X	Y
0	±60	±25	±60	±25	±25	±60	±25	±60	0	±45	±23	±110	±50	±120	±50
5	±60	±25	±60	±25	±25	±60	±25	±60	5	±45	±23	±110	±50	±120	±50
12	±60	±25	±60	±25	±25	±60	±25	±60	10	±45	±23	±110	±50	±120	±50
15	±60	±25	±60	±25	±25	±60	±25	±60	15	±45	±23	±110	±50	±120	±50
18	±60	±25	±60	±25	±25	±60	±25	±60	20	±40	±20	±110	±50	±120	±50
20	±60	±25	±60	±25	±25	±60	±25	±60	25	±40	±20	±100	±50	±100	±50
22	±60	±25	±60	±25	±25	±60	±25	±60	30	±36	±18	±100	±50	±100	±50
25	±60	±25	±60	±25	±25	±60	±25	±60	36	±20	±10	±100	±50	±100	±50
30	±60	±25	±60	±25	±25	±60	±25	±60	40			±100	±50	±100	±50
32	±50	±25	±50	±25	±25	±50	±25	±50	45			±100	±50	±100	±50
35	±50	±25	±50	±25	±25	±50	±25	±50	50			±100	±50	±100	±50
40	±50	±20	±50	±20	±20	±50	±20	±50	60			±80	±35	±80	±35
45	±25	±20	±25	±20	±20	±25	±20	±25	70			±80	±35	±80	±35
50	±25	±20	±25	±20	±20	±25	±20	±25	80			±80	±35	±80	±35
52	±25	±8	±25	±8	±8	±25	±8	±25	90			±80	±35	±80	±35
60									100			±35	±15	±80	±35
65									110					±25	±15

Dimensions in mm

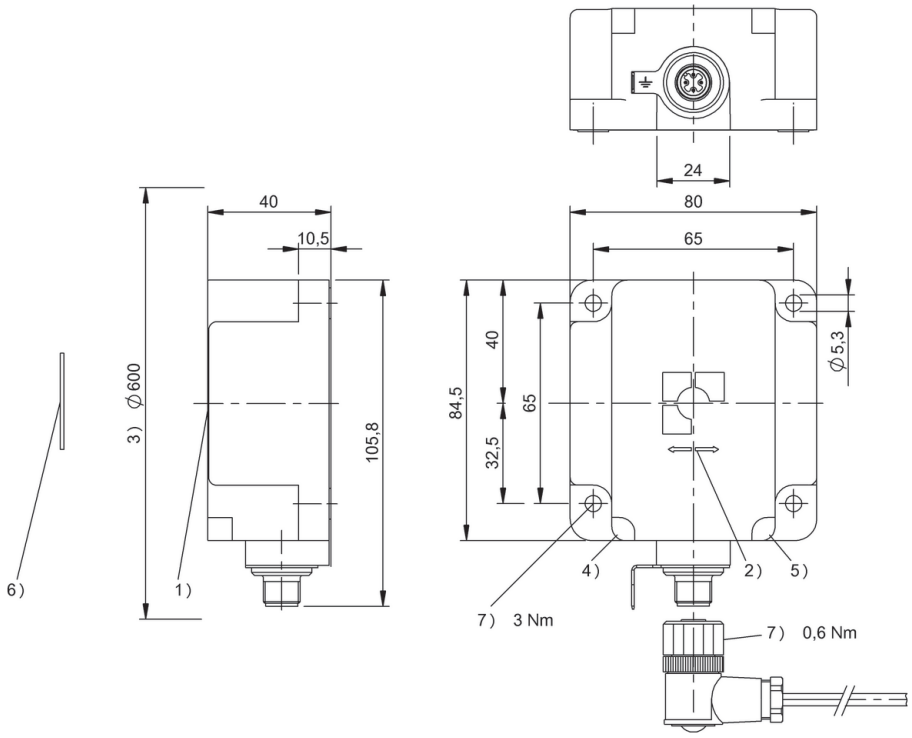

1) Sensing surface, 2) Read/write axis, 3) Clear zone, 4) LED (Power), 5) LED (CP), 6) Data carrier, 7) Tightening torque

	BIS011W BIS011Y BIS011U		BIS017F			BIS011M BIS011Z BIS011N				BIS012J BIS012K BIS012L					BIS0112					BIS00NZ			
	>240	>240	>200	>200		>200	>200	>200	>200	>200	>200	>200	>200		>200	>200	>200	>200		>27	>27	>27	>27
	>480	>480	>200	>200		>200	>200	>200	>200	>200	>200	>200	>200		>200	>200	>200	>200		>27	>27	>27	>27
	>50	>50	>50	>50																			
						0-40	0-40			0-42	0-42				0-70	0-70							
								0-50	0-50			0-42	0-42				0-54	0-54					
	0-60	0-60	0-25	0-25		0-40	0-40	0-50	0-50	0-42	0-42	0-42	0-42		0-70	0-70	0-54	0-54		0-57	0-57	0-27	0-27
	0-60	0-60	0-25	0-25		0-40	0-40	0-50	0-50	0-42	0-42	0-42	0-42		0-70	0-70	0-54	0-54		0-57	0-57	0-27	0-27
	X	Y	X	Y		X	Y	X	Y	X	Y	X	Y		X	Y	X	Y		X	Y	X	Y
	±70	±30	±35	±21	0	±50	±24	±55	±28	±25	±50	±25	±50	0	±34	±80	±30	±60	0	±70	±35	±40	±20
	±70	±30	±35	±21	5	±50	±24	±55	±28	±25	±50	±25	±50	5	±34	±80	±30	±60	5	±70	±35	±40	±20
	±70	±30	±35	±21	12	±50	±24	±55	±28	±25	±50	±25	±50	10	±34	±80	±30	±60	10	±70	±35	±40	±20
	±70	±30	±33	±19	15	±50	±24	±55	±28	±25	±45	±25	±45	15	±34	±80	±30	±60	15	±70	±35	±30	±18
	±70	±30	±23	±13	18	±50	±24	±55	±28	±22	±45	±22	±45	20	±34	±80	±30	±60	20	±70	±35	±30	±18
	±60	±30	±7	±5	20	±50	±24	±55	±28	±22	±45	±22	±45	25	±30	±75	±25	±52	25	±60	±30	±25	±15
	±60	±30			22	±40	±22	±50	±25	±22	±45	±22	±45	30	±30	±75	±25	±52	27	±60	±30		±5
	±60	±30			25	±40	±22	±50	±25	±22	±45	±22	±45	35	±30	±75	±25	±52	35	±60	±30		
	±60	±30			30	±40	±22	±50	±25	±19	±36	±19	±36	40	±30	±75	±25	±52	40	±60	±30		
	±50	±25			32	±40	±22	±40	±20	±19	±36	±19	±36	45	±27	±65	±20	±45	45	±50	±25		
	±50	±25			35	±40	±22	±40	±20	±19	±36	±19	±36	50	±27	±65	±20	±45	50	±50	±25		
	±15	±10			40	±20	±10	±40	±20	±10	±18	±10	±18	54	±27	±65	±12	±22	57	±30	±15		
					42			±40	±20	±10	±18	±10	±18	60	±27	±65			60				
					50			±20	±10					65	±20	±40			65				
					52									70	±20	±40			70				
					60									75					75				
					65									80									

Do you need more details? Our Product Finder at www.balluff.com provides you with product-specific information, including technical drawings, data sheets, user guides and more for each individual product. All items are available for download.

For processor units BIS V-6...	**BIS013H** BIS VM-348-401-S4
Product Group	HF (13.56 MHz)
Dimension	Ø 12 x 65 mm
Installation	metal-free (clear zone)
Antenna type	round
Supported data carrier types	DIN ISO 15693, DIN ISO 15693 (High Memory)
Connection	Male, 4-pin
Housing material	Brass, nuts nickel plated brass
Ambient temperature	0...70 °C
Protection degree	IP67
Approval/Conformity	CE, FCC Part 15, IC RSS-210, UL-FILE E227256, Vol.X1, BIS

Appropriate data carrier

	BIS0042		BIS004A		BIS0044		BIS00UC		
Data carrier distance to metal	>50	>0	>50	>0	>50		>50	>0	>0
Data carrier clear zone	>200	>0	>200	>0	>200		>200	>200	>0
Working distance for writing	0-7	0-5	0-7	0-5	0-12		0-5	0-3	0-2
Working distance for reading	0-7	0-5	0-7	0-5	0-12		0-5	0-3	0-2
Offset at distance									
0	±5	±3	±4.5	±3	±7		±4	±2.5	±2
1	±5	±3	±4.5	±3	±7		±4	±2.5	±1
2	±5	±3	±4.5	±3	±7		±4	±2	
3	±4.5	±2.5	±4	±2.5	±7		±3	±1	
4	±4.5	±2.5	±4	±2.5	±7		±3		
5	±4.5	±1	±4	±1	±6		±1.5		
6	±4.5		±4		±6				
7	±2.5		±2		±6				
8					±6				
10					±3				
12					±3				
18									

Dimensions in mm

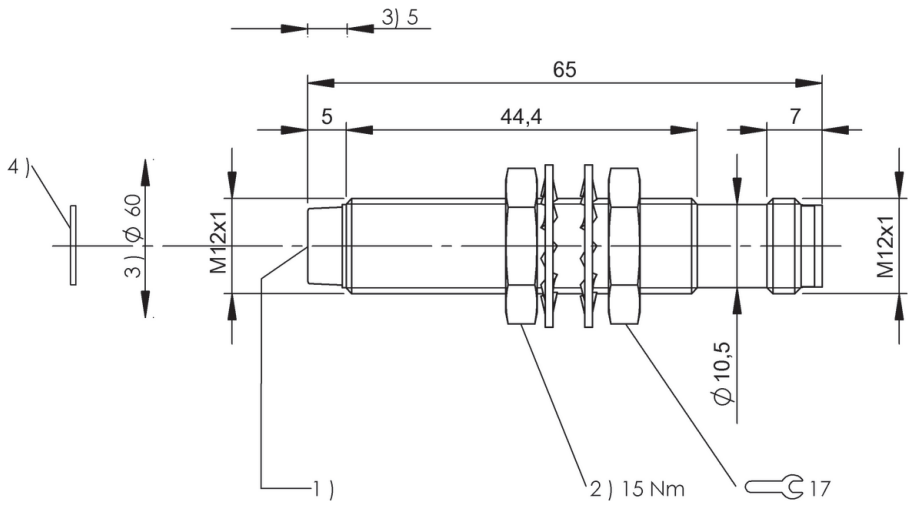

1) Sensing surface, 2) Tightening torque, 3) Clear zone, 4) Data carrier

For processor units BIS V-6...	**BIS015M** BIS VM-330-401-S4
Product Group	HF (13.56 MHz)
Dimension	Ø 12 x 65 mm
Installation	metal-free (clear zone) on metal flush in metal
Antenna type	round
Supported data carrier types	DIN ISO 15693, DIN ISO 15693 (High Memory)
Connection	Male, 4-pin
Housing material	Brass, nuts brass with white bronze
Ambient temperature	0...70 °C
Protection degree	IP67
Approval/Conformity	CE, FCC Part 15, IC RSS-210, UL-FILE E227256, Vol.X1, BIS

Appropriate data carrier

	BIS0042			BIS00UC			BIS004A			BIS00YL			BIS00YK				BIS00NU BIS00NW BIS0100
Data carrier distance to metal	>20	>0	>0	>20	>0	>0	>20	>0	>0	>20	>0	>0	>20	>0	>0		>0
Data carrier clear zone	>100	>100	>0	>100	>100	>0	>100	>100	>0	>100	>100	>0	>100	>100	>0		>100
Working distance for writing	0-6.5	0-6	0-5	0-4.5	0-3	0-2	0-5.5	0-5	0-3.5	0-6	0-5.5	0-2	0-4.5	0-4	0-2		0-7
Working distance for reading	0-6.5	0-6	0-5	0-4.5	0-3	0-2	0-5.5	0-5	0-3.5	0-6	0-5.5	0-2	0-4.5	0-4	0-2		0-7
Offset at distance																	
0	±4	±3.5	±3.5	±2.5	±2.5	±2	±3	±3	±2.5	±3.5	±3.5	±2	±3.5	±3	±2	0	±4.5
1	±4	±3.5	±3.5	±2.5	±2.5	±2	±3	±3	±2.5	±3.5	±3.5	±2	±3.5	±3	±2	2	±4.5
2	±4	±3.5	±3.5	±2.5	±2	±1	±3	±3	±2.5	±3.5	±3.5	±1	±3.5	±3	±1	3	±4
3	±3	±3	±2.5	±2	±1		±2	±2	±2	±3	±3		±3	±2		4	±4
3.5	±3	±3	±2.5	±2			±2	±2	±1	±3	±3		±2	±1		5	±4
4	±3	±3	±2.5	±2			±2	±2		±3	±3		±2	±1		7	±1.5
4.5	±3	±3	±1.5	±1			±1	±1		±2	±2		±2			9	
5	±3	±3	±1.5				±1	±1		±2	±2					10	
5.5	±2	±2					±1			±2	±2					15	
6	±2	±2								±2						20	
6.5	±2															25	

Dimensions in mm

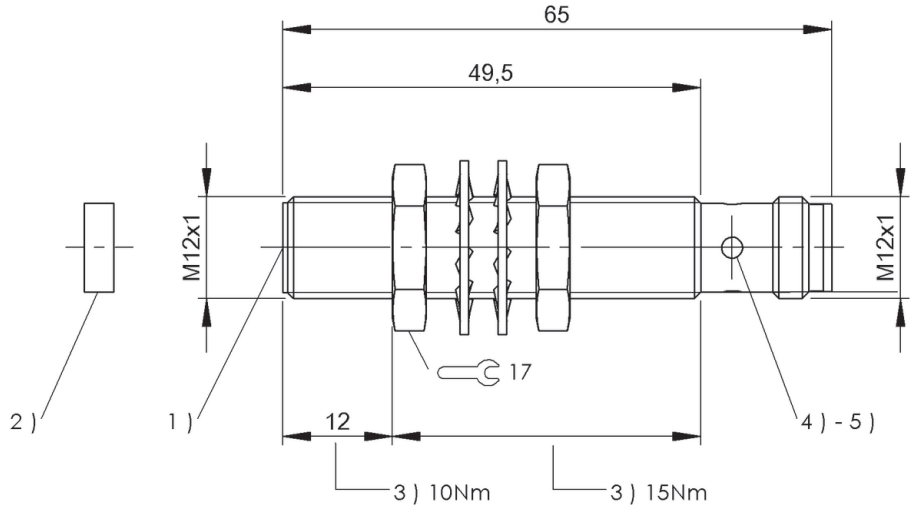

1) Sensing surface, 2) Data carrier, 3) Tightening torque, 4) LED (CP), 5) LED (Power)

For processor units BIS V-6...	**BIS013Z** BIS VM-343-401-S4
Product Group	HF (13.56 MHz)
Dimension	Ø 14.5 x 55 mm
Installation	metal-free (clear zone) on metal flush in metal
Antenna type	round
Supported data carrier types	DIN ISO 15693, DIN ISO 15693 (High Memory)
Connection	Male, 4-pole, 0.30 m, PU
Housing material	Brass
Ambient temperature	0...70 °C
Protection degree	IP67
Approval/Conformity	CE, UL-FILE E227256, Vol.X1, BIS, FCC, IC

Appropriate data carrier

	BIS0042			**BIS00UC** **BIS00UE**		**BIS004A**			**BIS00YL**			**BIS00YK**		
Data carrier distance to metal	>50	>0	>0	>50		>50	>0	>0	>50	>0	>0	>50	>0	>0
Data carrier clear zone	>200	>200	>0	>200		>200	>200	>0	>200	>200	>0	>200	>200	>0
Working distance for writing	0-5.5	0-5	0-4	0-3.5		0-5	0-4.5	0-3.5	0-6.5	0-6	0-3	0-5	0-5	0-2.5
Working distance for reading	0-5.5	0-5	0-4	0-3.5		0-5	0-4.5	0-3.5	0-6.5	0-6	0-3	0-5	0-5	0-2.5
Offset at distance														
0	±3.5	±3	±2.5	±3		±3.5	±3	±2.5	±4	±3.5	±3	±3	±3	±2.5
1	±3.5	±3	±2.5	±3		±3.5	±3	±2.5	±4	±3.5	±3	±3	±3	±2.5
2	±3.5	±3	±2.5	±3		±3.5	±3	±2.5	±4	±3.5	±2	±3	±3	±2
2.5	±3	±2.5	±2	±2		±3	±2.5	±2	±3	±3	±1	±2.5	±2.5	±1
3	±3	±2.5	±2	±2		±3	±2.5	±1	±3	±3	±1	±2.5	±2.5	
3.5	±3	±2.5	±1	±1		±3	±2.5	±1	±3	±3		±2.5	±2.5	
4	±3	±2.5	±1			±3	±1.5		±3	±3		±2	±2	
4.5	±2	±1.5				±2	±1.5		±3	±3		±1	±1	
5	±2	±1.5				±2			±3	±3		±1	±1	
5.5	±2								±2	±2				
6									±2	±2				
6.5									±2					

Dimensions in mm

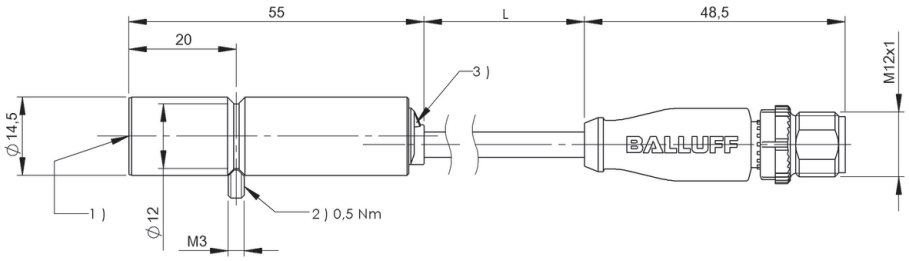

1) Sensing surface, 2) Tightening torque, 3) Function indicator

		BIS00LC		BIS0119		BIS00NU BIS00NW BIS0100	
		>25		>0		>0	
		>100		>100		>100	
		0-7		0-7.5		0-7.5	
		0-7		0-7.5		0-7.5	
	0	±4		±5		±5	
	2	±4		±5		±5	
	4	±3.5		±5		±4.5	
	5	±3.5		±4		±4	
	6	±2		±4		±4	
	7	±2		±2.5		±2	
	7.5			±2.5		±2	
	10						
	14						
	16						
	18						
	20						

Do you need more details? Our Product Finder at www.balluff.com provides you with product-specific information, including technical drawings, data sheets, user guides and more for each individual product. All items are available for download.

For processor units BIS V-6...	**BIS019U** BIS VM-343-501/05-S115
Product Group	HF (13.56 MHz)
Dimension	Ø 14.5 x 82.1 mm
Installation	metal-free (clear zone)
Antenna type	round
Supported data carrier types	DIN ISO 15693, DIN ISO 15693 (High Memory), LF 70/455 kHz
Connection	Male, 8-pin
Housing material	Brass
Ambient temperature	0...70 °C
Protection degree	IP67
Approval/Conformity	CE, UL-FILE E227256, Vol.X1, BIS

Appropriate data carriers on request

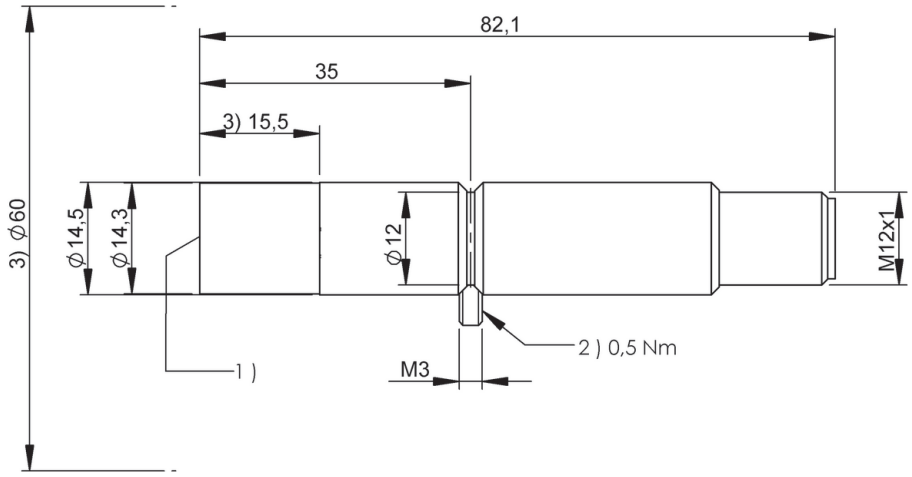

1) Sensing surface, 2) Tightening torque

Do you need more details? Our Product Finder at www.balluff.com provides you with product-specific information, including technical drawings, data sheets, user guides and more for each individual product. All items are available for download.

For processor units BIS V-6...	**BIS019W** BIS VM-343-501/10-S115
Product Group	HF (13.56 MHz)
Dimension	Ø 14.5 x 82.1 mm
Installation	metal-free (clear zone)
Antenna type	round
Supported data carrier types	DIN ISO 15693, DIN ISO 15693 (High Memory), LF 70/455 kHz
Connection	Male, 8-pin
Housing material	Brass
Ambient temperature	0...70 °C
Protection degree	IP67
Approval/Conformity	CE, UL-FILE E227256, Vol.X1, BIS

Appropriate data carriers on request

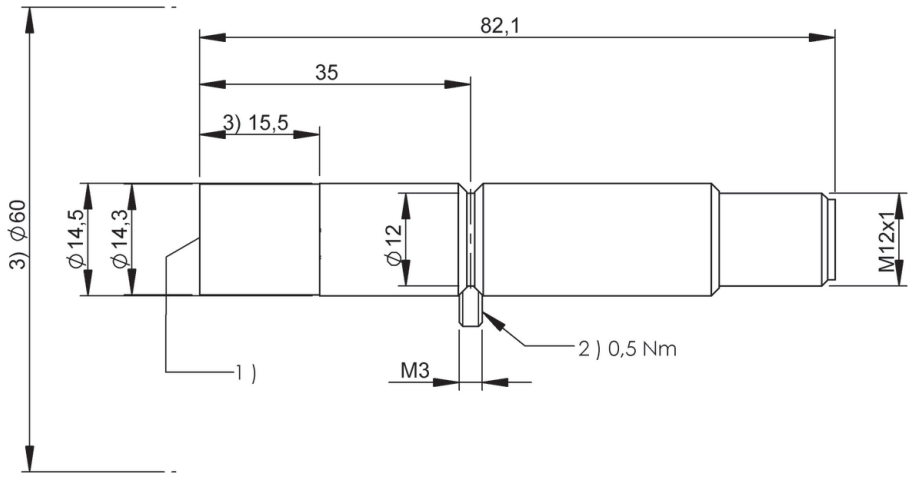

1) Sensing surface, 2) Tightening torque

Do you need more details? Our Product Finder at www.balluff.com provides you with product-specific information, including technical drawings, data sheets, user guides and more for each individual product. All items are available for download.

For processor units BIS V-6...	**BIS0140** BIS VM-346-401-S4
Product Group	HF (13.56 MHz)
Dimension	Ø 16 x 55 mm
Installation	metal-free (clear zone) on metal flush in metal
Antenna type	round
Supported data carrier types	DIN ISO 15693, DIN ISO 15693 (High Memory)
Connection	0.30 m, PU
Housing material	Brass
Ambient temperature	0...70 °C
Protection degree	IP67
Approval/Conformity	CE, UL-FILE E227256, Vol.X1, BIS, FCC, IC

Appropriate data carrier

	BIS0042			BIS00UC BIS00UE		BIS004A			BIS00YL			BIS00YK		
Data carrier distance to metal	>50	>0	>0	>50		>50	>0	>0	>50	>0	>0	>50	>0	>0
Data carrier clear zone	>200	>200	>0	>200		>200	>200	>0	>200	>200	>0	>200	>200	>0
Working distance for writing	0-5.5	0-5	0-4	0-3.5		0-5	0-4.5	0-3.5	0-6.5	0-6	0-3	0-5	0-5	0-2.5
Working distance for reading	0-5.5	0-5	0-4	0-3.5		0-5	0-4.5	0-3.5	0-6.5	0-6	0-3	0-5	0-5	0-2.5
Offset at distance														
0	±3.5	±3	±2.5	±3		±3.5	±3	±2.5	±4	±3.5	±3	±3	±3	±2.5
1	±3.5	±3	±2.5	±3		±3.5	±3	±2.5	±4	±3.5	±3	±3	±3	±2.5
2	±3.5	±3	±2.5	±3		±3.5	±3	±2.5	±4	±3.5	±2	±3	±3	±2
2.5	±3	±2.5	±2	±2		±3	±2.5	±2	±3	±3	±1	±2.5	±2.5	±1
3	±3	±2.5	±2	±2		±3	±2.5	±1	±3	±3	±1	±2.5	±2.5	
3.5	±3	±2.5	±1	±1		±3	±2.5	±1	±3	±3		±2.5	±2.5	
4	±3	±2.5	±1			±3	±1.5		±3	±3		±2	±2	
4.5	±2	±1.5				±2	±1.5		±3	±3		±1	±1	
5	±2	±1.5				±2			±3	±3		±1	±1	
5.5	±2								±2	±2				
6									±2	±2				
6.5									±2					

Dimensions in mm

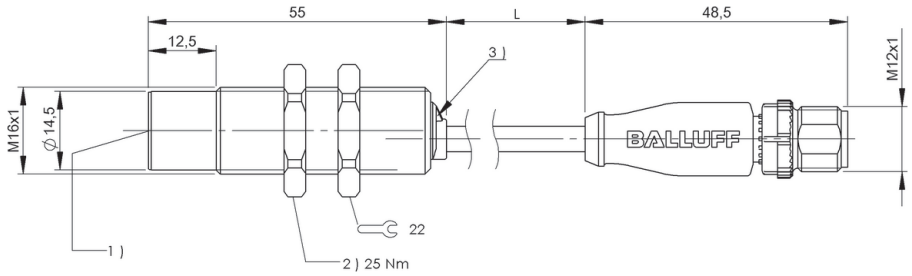

1) Sensing surface, 2) Tightening torque, 3) Function indicator

		BIS00LC	BIS0119	BIS00NU BIS00NW BIS0100
		>25	>0	>0
		>100	>100	>100
		0-7	0-7.5	0-7.5
		0-7	0-7.5	0-7.5
	0	±4	±5	±5
	2	±4	±5	±5
	4	±3.5	±5	±4.5
	5	±3.5	±4	±4
	6	±2	±4	±4
	7	±2	±2.5	±2
	7.5		±2.5	±2
	10			
	14			
	16			
	18			
	20			

Do you need more details? Our Product Finder at www.balluff.com provides you with product-specific information, including technical drawings, data sheets, user guides and more for each individual product. All items are available for download.

For processor units BIS V-6...	**BIS019Y** BIS VM-346-501/05-S115
Product Group	HF (13.56 MHz)
Dimension	Ø 16 x 82.1 mm
Installation	metal-free (clear zone)
Antenna type	round
Supported data carrier types	DIN ISO 15693, DIN ISO 15693 (High Memory), LF 70/455 kHz
Connection	Male, 8-pin
Housing material	Brass
Ambient temperature	0...70 °C
Protection degree	IP67
Approval/Conformity	CE, UL-FILE E227256, Vol.X1, BIS

Appropriate data carriers on request

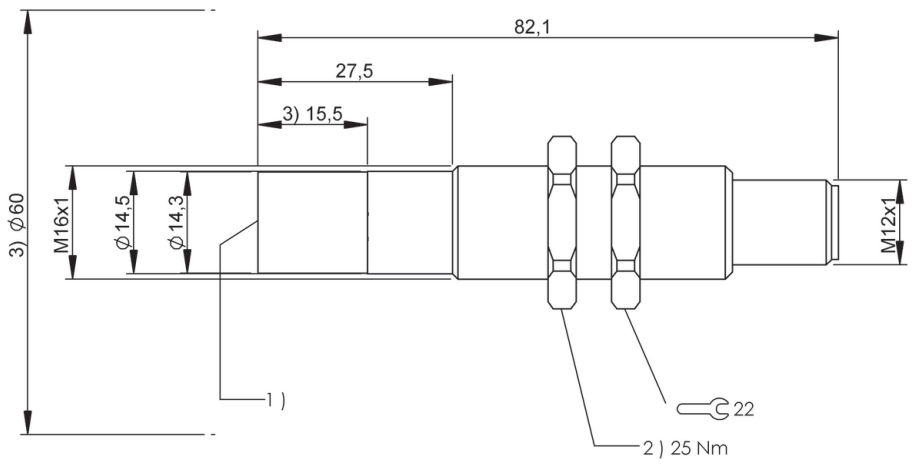

1) Sensing surface, 2) Tightening torque

Do you need more details? Our Product Finder at www.balluff.com provides you with product-specific information, including technical drawings, data sheets, user guides and more for each individual product. All items are available for download.

For processor units BIS V-6...	**BIS019Z** BIS VM-346-501/10-S115
Product Group	HF (13.56 MHz)
Dimension	Ø 16 x 82.1 mm
Installation	metal-free (clear zone)
Antenna type	round
Supported data carrier types	DIN ISO 15693, DIN ISO 15693 (High Memory), LF 70/455 kHz
Connection	Male, 8-pin
Housing material	Brass
Ambient temperature	0...70 °C
Protection degree	IP67
Approval/Conformity	CE, UL-FILE E227256, Vol.X1, BIS

Appropriate data carriers on request

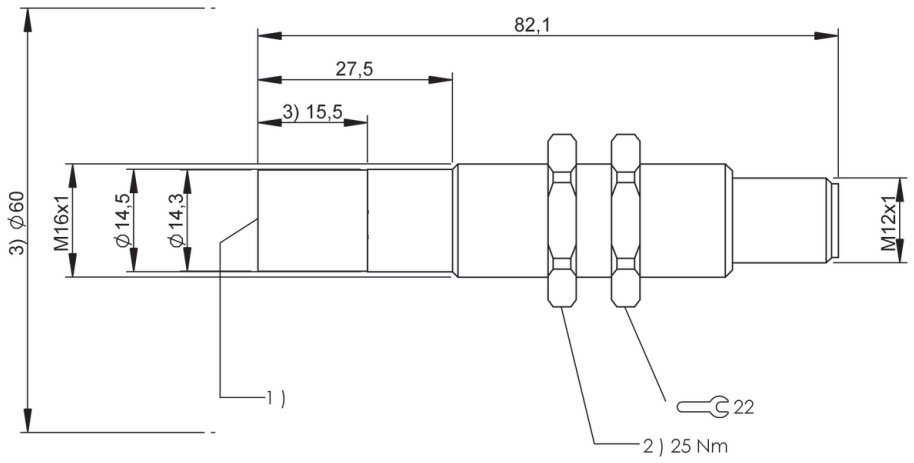

1) Sensing surface, 2) Tightening torque

Do you need more details? Our Product Finder at www.balluff.com provides you with product-specific information, including technical drawings, data sheets, user guides and more for each individual product. All items are available for download.

For processor units BIS V-6...	**BIS015P** BIS VM-332-401-S4
Product Group	HF (13.56 MHz)
Dimension	Ø 18 x 65 mm
Installation	metal-free (clear zone) on metal flush in metal
Antenna type	round
Supported data carrier types	DIN ISO 15693, DIN ISO 15693 (High Memory)
Connection	Male, 4-pin
Housing material	Brass, nuts brass with white bronze
Ambient temperature	0...70 °C
Protection degree	IP67
Approval/Conformity	CE, FCC Part 15, IC RSS-210, UL-FILE E227256, Vol.X1, BIS

Appropriate data carrier

	BIS0042			BIS0043			BIS011F BIS011E BIS011A BIS0139			BIS004A			BIS0143		
Data carrier distance to metal	>20	>0	>0	>20	>0	>0	>20	>0	>0	>20	>0	>0	>20		
Data carrier clear zone	>100	>100	>0	>100	>100	>0	>100	>100	>0	>100	>100	>0	>100		
Working distance for writing	0-8.5	0-8	0-6	0-11	0-8	0-6	0-6.5	0-6	0-5	0-7	0-6.5	0-4.5	0-13		
Working distance for reading	0-8.5	0-8	0-6	0-11	0-8	0-6	0-6.5	0-6	0-5	0-7	0-6.5	0-4.5	0-13		
Offset at distance															
0	±5	±5	±4	±8	±8	±7	±8	±8	±7	±4.5	±4	±3.5	±8		
2	±5	±5	±4	±8	±8	±7	±8	±8	±7	±4.5	±4	±3.5	±8		
4	±4.5	±4	±3	±8	±7	±6	±7	±7	±6	±4	±3	±2.5	±8		
4.5	±4.5	±4	±3	±8	±7	±4	±7	±6	±3	±3.5	±3	±1.5	±8		
5	±4.5	±4	±3	±8	±7	±4	±7	±6	±3	±3.5	±3		±8		
6	±4	±3	±2	±7	±5	±1	±4	±3		±3.5	±2		±7		
6.5	±4	±3		±7	±5		±4			±2	±2		±7		
7	±4	±3		±7	±5					±2			±7		
8	±2	±2		±7	±4								±7		
8.5	±2			±7									±7		
10				±7									±7		
11				±4									±4		
13													±4		

Dimensions in mm

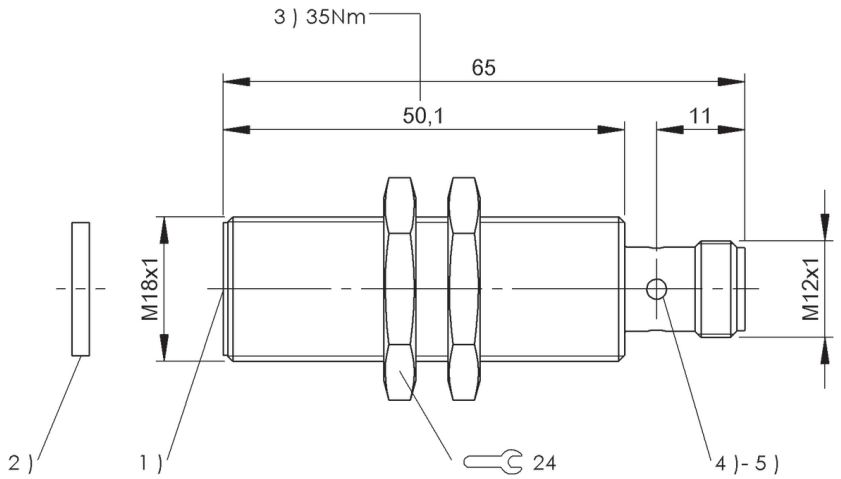

1) Sensing surface, 2) Data carrier, 3) Tightening torque, 4) LED (CP), 5) LED (Power)

		BIS0044		BIS00NU BIS00NW BIS0100	
		>25		>0	
		>100		>100	
		0-10		0-9.5	
		0-10		0-9.5	
	0	±6		±5	
	2	±6		±5	
	4	±6		±5	
	5	±6		±5	
	6	±5		±4	
	7	±5		±4	
	8	±5		±4	
	9.5	±3		±2	
	10	±3			
	12				
	15				
	20				
	25				

Do you need more details? Our Product Finder at www.balluff.com provides you with product-specific information, including technical drawings, data sheets, user guides and more for each individual product. All items are available for download.

For processor units BIS V-6...	**BIS015K** BIS VM-333-401-S4
Product Group	HF (13.56 MHz)
Dimension	Ø 30 x 65.9 mm
Installation	metal-free (clear zone) on metal flush in metal
Antenna type	round
Supported data carrier types	DIN ISO 15693, DIN ISO 15693 (High Memory)
Connection	Male, 4-pin
Housing material	Brass, nuts brass with white bronze
Ambient temperature	0...70 °C
Protection degree	IP67
Approval/Conformity	CE, FCC Part 15, IC RSS-210, UL-FILE E227256, Vol.X1, BIS

Appropriate data carrier

	BIS0042	BIS0043 BIS0111			BIS004A	BIS0143		BIS0044	BIS0045
Data carrier distance to metal	>20	>25	>0	>0	>20	>20		>25	>25
Data carrier clear zone	>100	>100	>100	>0	>100	>100		>100	>100
Working distance for writing	0-13	0-21	0-15	0-13	0-10	0-21		0-18	0-21
Working distance for reading	0-13	0-21	0-15	0-13	0-10	0-21		0-18	0-21
Offset at distance									
0	±8	±13	±10	±10	±7	±12	0	±9	±13
5	±8	±13	±10	±10	±7	±12	5	±9	±13
8	±8	±13	±10	±9	±6	±12	10	±9	±13
10	±7	±13	±8	±8	±4	±12	13	±8	±12
13	±4	±12	±8	±3		±11	15	±8	±12
15		±12	±3			±11	16	±4	±11
18		±11				±10	18	±4	±11
20		±5				±5	20		±5
21		±5				±5	21		±5
25							25		
30							30		

Dimensions in mm

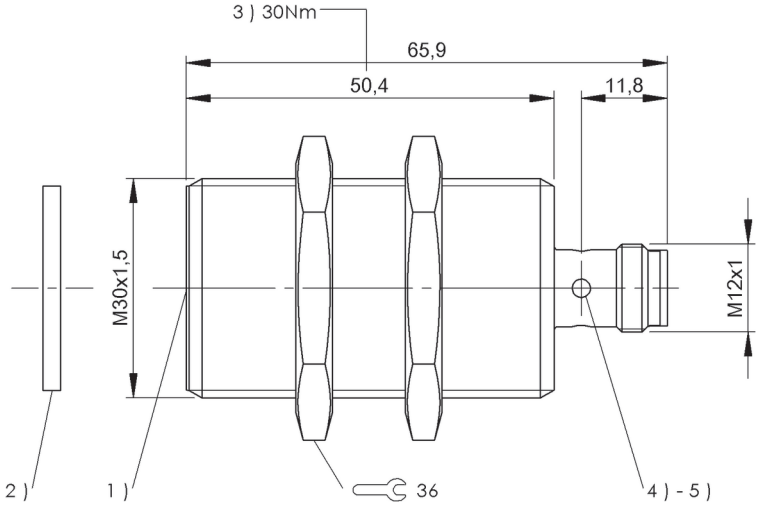

1) Sensing surface, 2) Data carrier, 3) Tightening torque, 4) LED (CP), 5) LED (Power)

	BIS0046	BIS00NU BIS00NW BIS0100		BIS011A
	>50	>0		>20
	>150	>100		>100
	0-30	0-13		0-15
	0-30	0-13		0-15
	±20	±9	0	±11
	±20	±9	5	±11
	±20	±7	10	±10
	±18	±3	12	±8
	±18		13	±8
	±18		15	±4
	±18		18	
	±18		20	
	±16		21	
	±16		25	
	±8		30	

Do you need more details? Our Product Finder at www.balluff.com provides you with product-specific information, including technical drawings, data sheets, user guides and more for each individual product. All items are available for download.

For processor units BIS V-6...	**BIS00RF** BIS VM-300-001-S4
Product Group	HF (13.56 MHz)
Dimension	Ø 30 x 70.5 mm
Installation	metal-free (clear zone)
Antenna type	round
Supported data carrier types	DIN ISO 14443, DIN ISO 15693
Connection	Male, 4-pin
Housing material	Brass, nuts brass with white bronze
Ambient temperature	0...70 °C
Protection degree	IP67
Approval/Conformity	CE, FCC Part 15, IC RSS-210, UL-FILE E227256, Vol.X1, BIS

Appropriate data carrier

	BIS003Y			BIS003Z			BIS0040		BIS0042		BIS0043			BIS0044		
Data carrier distance to metal	>25	>10	>5	>50	>15	>10	>20	>5	>20	>5	>25	>0		>25	>10	>5
Data carrier clear zone	>100	>60	>50	>150	>90	>70	>100	>100	>100	>100	>100	>0		>100	>60	>50
Working distance for writing	0-22	0-20	0-15	0-32	0-22	0-12	0-9	0-9	0-11	0-11	0-30	0-16		0-22	0-16	0-10
Working distance for reading	0-22	0-20	0-15	0-32	0-22	0-12	0-9	0-9	0-11	0-11	0-30	0-16		0-22	0-16	0-10
Offset at distance																
0	±15	±12	±8	±20	±15	±6	±7	±6	±10	±7	±18	±10	0	±14	±8	±7
5	±15	±12	±8	±20	±15	±6	±7	±6	±8	±7	±18	±10	5	±14	±8	±7
9	±15	±10	±6	±20	±15	±5	±2	±1	±5	±3	±18	±8	8	±12	±6	±2
12	±15	±8	±4	±20	±15	±4					±16	±6	10	±12	±6	±2
15	±15	±8	±4	±20	±12						±16	±6	12	±12	±5	
16	±12	±6		±20	±10						±16	±4	15	±12	±4	
18	±12	±6		±20	±8						±16		16	±10	±2	
20	±12	±4		±20	±6						±16		18	±10		
22	±4			±18	±4						±14		20	±10		
25				±14							±14		22	±6		
30				±10							±10		25			
32				±4									30			
35													32			
40													35			
43													40			
45													42			
50													44			

Dimensions in mm

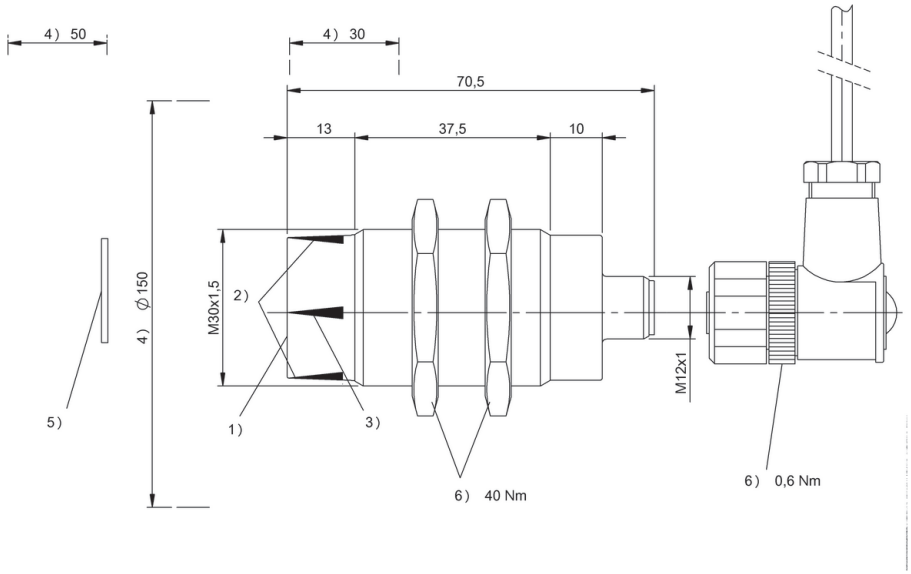

1) Sensing surface, 2) LED (CP), 3) LED (Power), 4) Clear zone, 5) Data carrier, 6) Tightening torque

	BIS0045			BIS0046			BIS00YE		BIS00Y4			BIS00LC		BIS00M9 BIS00M8		BIS00NU BIS00NW BIS0100	
	>25	>10	>5	>50	>15	>10	>25	>0	>50			>25	>0	>0		>0	
	>100	>60	>50	>150	>90	>70	>100	>100	>150			>100	>100	>100		>100	
	0-28	0-18	0-10	0-44	0-25	0-15	0-30	0-8	0-42			0-27	0-13	0-22		0-13	
	0-28	0-18	0-10	0-44	0-25	0-15	0-30	0-8	0-42			0-27	0-13	0-22		0-13	
	±16	±10	±7	±25	±18	±15	±18	±8	±30		0	±16	±10	±13		±10	
	±16	±10	±7	±25	±18	±15	±18	±6	±30		5	±16	±10	±13		±10	
	±14	±8	±2	±25	±16	±12	±18	±3	±30		10	±16	±7	±13		±9	
	±14	±8	±2	±25	±16	±12	±18		±30		13	±14	±5	±11		±5	
	±14	±7		±24	±15	±10	±16		±28		15	±14		±11			
	±14	±6		±24	±14	±8	±16		±28		18	±14		±11			
	±14	±3		±24	±12		±16		±28		20	±14		±7			
	±14	±2		±24	±12		±16		±28		22	±12		±7			
	±14			±24	±10		±16		±28		25	±12					
	±12			±22	±8		±16		±24		27	±5					
	±12			±22	±6		±16		±24		30						
				±22			±10		±24		32						
				±16					±24		35						
				±16					±24		40						
				±16					±5		43						
				±10					±5		45						
				±5							50						

Do you need more details? Our Product Finder at www.balluff.com provides you with product-specific information, including technical drawings, data sheets, user guides and more for each individual product. All items are available for download.

For processor units BIS V-6...	**BIS0132** BIS VM-344-401-S4
Product Group	HF (13.56 MHz)
Dimension	Ø 30 x 70.5 mm
Installation	metal-free (clear zone)
Antenna type	round
Supported data carrier types	DIN ISO 15693, DIN ISO 15693 (High Memory)
Connection	Male, 4-pin
Housing material	Brass, nuts nickel plated brass, nuts brass with white bronze
Ambient temperature	0...70 °C
Protection degree	IP67
Approval/Conformity	CE, FCC Part 15, IC RSS-210, UL-FILE E227256, Vol.X1, BIS

Appropriate data carrier

	BIS0042		BIS00LC		BIS0043 BIS0111		BIS011F BIS011E BIS011A BIS0139			BIS0044			BIS0045		
Data carrier distance to metal	>20	>5	>25	>0	>25	>0	>25	>0		>25	>10	>5	>25	>10	>5
Data carrier clear zone	>100	>100	>100	>100	>100	>0	>100	>100		>100	>60	>50	>100	>60	>50
Working distance for writing	0-11	0-11	0-27	0-13	0-30	0-16	0-18	0-15		0-22	0-16	0-10	0-28	0-18	0-10
Working distance for reading	0-11	0-11	0-27	0-13	0-30	0-16	0-18	0-15		0-22	0-16	0-10	0-28	0-18	0-10
Offset at distance															
0	±10	±7	±16	±10	±18	±10	±12	±11	0	±14	±8	±7	±16	±10	±7
5	±8	±7	±16	±10	±18	±10	±12	±11	5	±14	±8	±7	±16	±10	±7
9	±5	±3	±16	±7	±18	±8	±11	±10	8	±12	±6	±2	±14	±8	±2
13			±14	±5	±16	±6	±10	±9	10	±12	±6	±2	±14	±8	±2
15			±14		±16	±6	±10	±5	12	±12	±5		±14	±7	
16			±14		±16	±4	±5		15	±12	±4		±14	±6	
18			±14		±16		±5		16	±10	±2		±14	±3	
20			±14		±16				18	±10			±14	±2	
22			±12		±14				20	±10			±14		
25			±12		±14				22	±6			±12		
27			±5		±10				25				±12		
32									30						
35									32						
40									35						
43									40						
45									42						
50									44						

Dimensions in mm

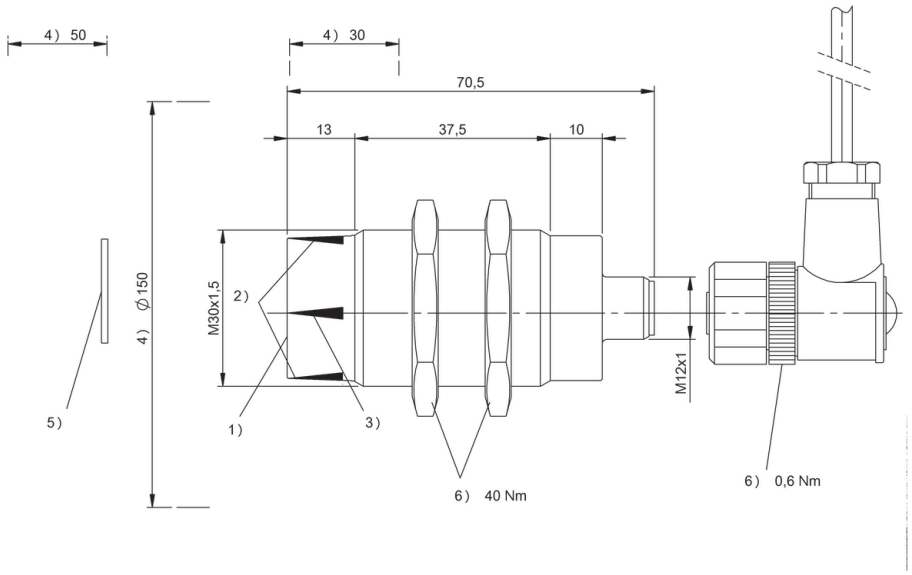

1) Sensing surface, 2) LED (CP), 3) LED (Power), 4) Clear zone, 5) Data carrier, 6) Tightening torque

	BIS0046			BIS00YE		BIS00Y4			BIS00M9 BIS00M8		BIS00NU BIS00NW BIS0100	
	>50	>15	>10	>25	>0	>50			>0		>0	
	>150	>90	>70	>100	>100	>150			>100		>100	
	0-44	0-25	0-15	0-30	0-8	0-42			0-22		0-13	
	0-44	0-25	0-15	0-30	0-8	0-42			0-22		0-13	
	±25	±18	±15	±18	±8	±30		0	±13		±10	
	±25	±18	±15	±18	±6	±30		5	±13		±10	
	±25	±16	±12	±18	±3	±30		10	±13		±9	
	±25	±16	±12	±18		±30		12	±11		±5	
	±24	±15	±10	±16		±28		13	±11		±5	
	±24	±14	±8	±16		±28		15	±11			
	±24	±12		±16		±28		18	±11			
	±24	±12		±16		±28		20	±7			
	±24	±10		±16		±28		22	±7			
	±22	±8		±16		±24		28				
	±22	±6		±16		±24		30				
	±22			±10		±24		32				
	±16					±24		35				
	±16					±24		40				
	±16					±5		43				
	±10					±5		45				
	±5							50				

Do you need more details? Our Product Finder at www.balluff.com provides you with product-specific information, including technical drawings, data sheets, user guides and more for each individual product. All items are available for download.

For processor units BIS V-6...	**BIS00T9** BIS VM-305-001-S4
Product Group	HF (13.56 MHz)
Dimension	25 x 10 x 50 mm
Installation	metal-free (clear zone)
Antenna type	round
Supported data carrier types	DIN ISO 14443, DIN ISO 15693
Connection	Connector, 4-pin, 0.50 m, PU
Housing material	ABS, GF16, interface aluminum
Ambient temperature	0...70 °C
Protection degree	IP67
Approval/Conformity	CE, UL-FILE E227256, Vol.X1, BIS

Appropriate data carrier

	BIS0040		BIS0042		BIS0044		BIS0048		BIS004A			BIS0043		BIS00M9 BIS00M8		BIS00NU BIS00NW BIS0100	
Data carrier distance to metal	>10	>0	>10	>0	>25		>10	>0	>10	>0		>25	>0	>0		>0	
Data carrier clear zone	>60	>0	>60	>0	>80		>60	>0	>60	>0		>100	>0	>100		>100	
Working distance for writing	0-6	0-4	0-8	0-6	0-13		0-5	0-4	0-7	0-5		0-17	0-11	0-17		0-12	
Working distance for reading	0-6	0-4	0-8	0-6	0-13		0-5	0-4	0-7	0-5		0-17	0-11	0-17		0-12	
Offset at distance																	
0	±3	±3	±4	±4	±6		±3	±3	±4	±3	0	±12	±8	±10		±7	
5	±2		±4	±2	±6		±2		±3	±2	5	±12	±8	±10		±7	
9					±4						8	±12	±6	±10		±6	
12					±2						10	±12	±6	±9		±6	
15											11	±8	±4	±9		±3	
16											12	±8		±9		±3	
18											15	±8		±4			
20											17	±4		±4			

Dimensions in mm

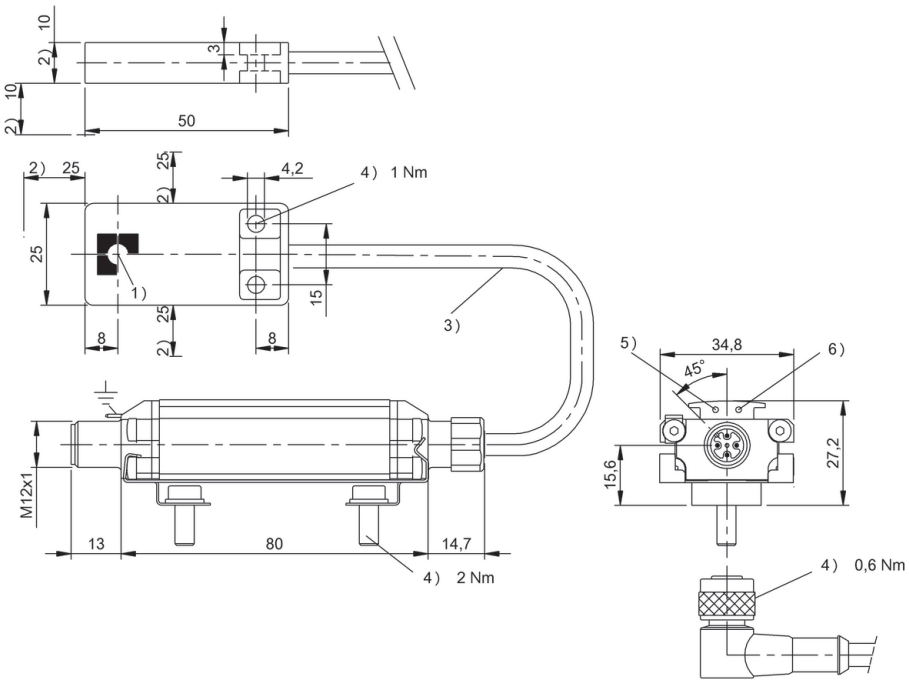

1) Sensing surface, 2) Clear zone, 3) Cable length see text, 4) Tightening torque, 5) LED (Power), 6) LED (CP)

Do you need more details? Our Product Finder at www.balluff.com provides you with product-specific information, including technical drawings, data sheets, user guides and more for each individual product. All items are available for download.

For processor units BIS V-6...	**BIS00T6** BIS VM-352-001-S4
Product Group	HF (13.56 MHz)
Dimension	25 x 10 x 50 mm
Installation	metal-free (clear zone)
Antenna type	Rod
Supported data carrier types	DIN ISO 15693
Connection	Connector, 4-pin, 0.50 m, PU
Housing material	ABS, GF16, interface aluminum
Ambient temperature	0...70 °C
Protection degree	IP67
Approval/Conformity	CE, UL-FILE E227256, Vol.X1, BIS

Appropriate data carrier

	BIS00NZ			**BIS017F**	
Data carrier clear zone A	>27	>27		>200	>200
Data carrier clear zone B	>27	>27		>200	>200
Data carrier clear zone C				>50	>50
Metallic mounting surface 40 × 22 mm					
Metallic mounting surface > 200 × 200 mm					
Working distance for writing	0-22	0-22		0-17	0-17
Working distance for reading	0-22	0-22		0-17	0-17
Offset at distance	X	Y		X	Y
0	±25	±5	0	±22	±9
5	±25	±5	5	±22	±9
10	±25	±5	10	±19	±8
15	±25	±5	15	±12	±6
20	±15	±5	17	±3	±2
22	±15	±5	20		

Dimensions in mm

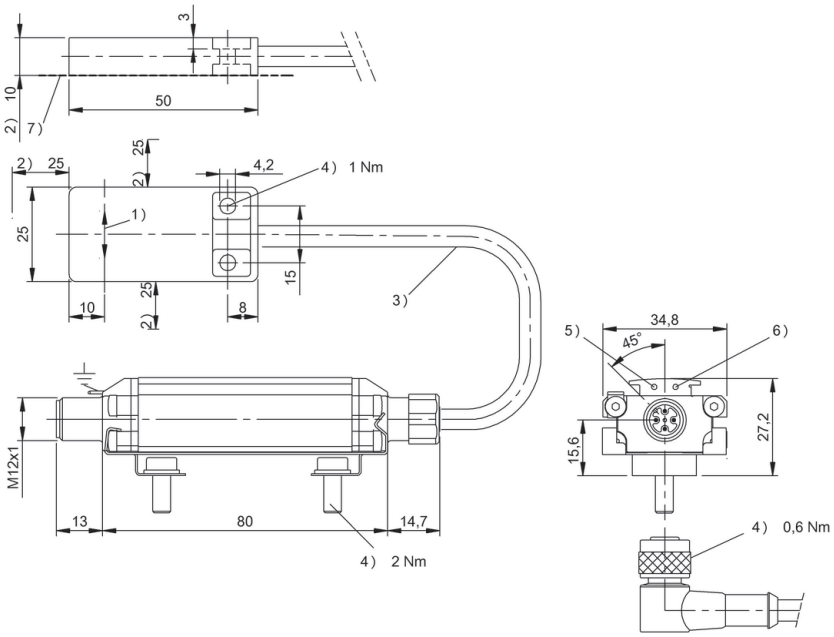

1) Sensing surface, 2) Clear zone, 3) Cable length see text, 4) Tightening torque, 5) LED (Power), 6) LED (CP), 7) Mounting on steel

Do you need more details? Our Product Finder at www.balluff.com provides you with product-specific information, including technical drawings, data sheets, user guides and more for each individual product. All items are available for download.

For processor units BIS V-6...	BIS00T7 BIS VM-306-001-S4
Product Group	HF (13.56 MHz)
Dimension	Ø 12 x 37.3 mm
Installation	metal-free (clear zone)
Antenna type	round
Supported data carrier types	DIN ISO 14443, DIN ISO 15693
Connection	Male, 4-pin, 0.50 m, PU
Housing material	Brass, Interface aluminum, nickel plate
Ambient temperature	0...70 °C
Protection degree	IP67
Approval/Conformity	CE, UL-FILE E227256, Vol.X1, BIS

Appropriate data carrier

	BIS0040		BIS0042		BIS0048		BIS004A	
Data carrier distance to metal	>10		>10		>10		>10	
Data carrier clear zone	>60		>60		>60		>60	
Working distance for writing	0-5		0-6		0-4		0-5	
Working distance for reading	0-5		0-6		0-4		0-5	
Offset at distance								
0	±2		±2		±2		±2	
2	±2		±2		±2		±2	
4	±1		±1		±1		±1	
5	±1		±1				±1	
6			±1					

Dimensions in mm

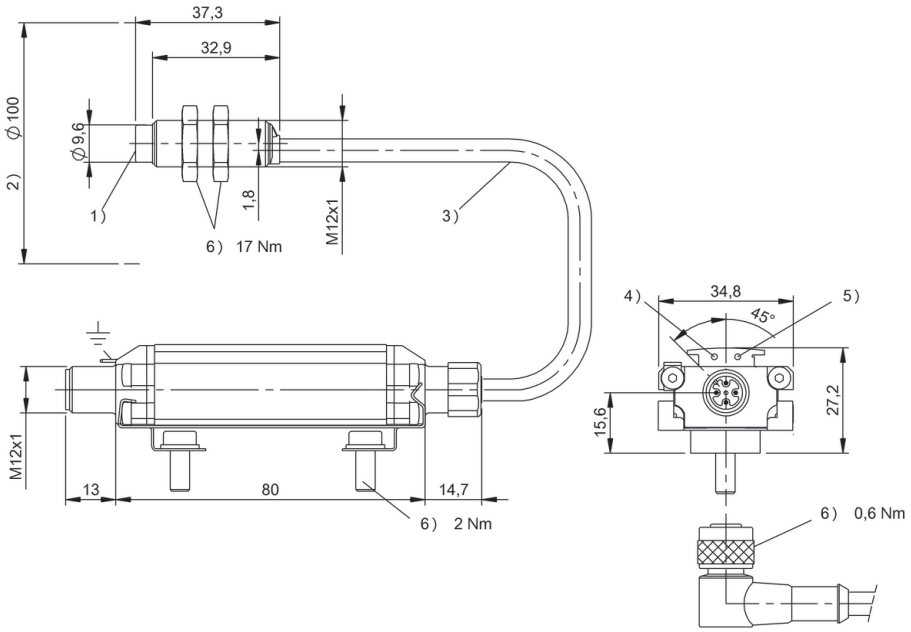

1) Sensing surface, 2) Clear zone, 3) Cable length see text, 4) LED (Power), 5) LED (CP), 6) Tightening torque

Do you need more details? Our Product Finder at www.balluff.com provides you with product-specific information, including technical drawings, data sheets, user guides and more for each individual product. All items are available for download.

For processor units BIS V-6...	BIS01CU BIS VM-309-001-S4
Product Group	HF (13.56 MHz)
Antenna type	round
Supported data carrier types	DIN ISO 14443, DIN ISO 15693
Protection degree	IP67
Approval/Conformity	CE, cULus, EAC, WEEE

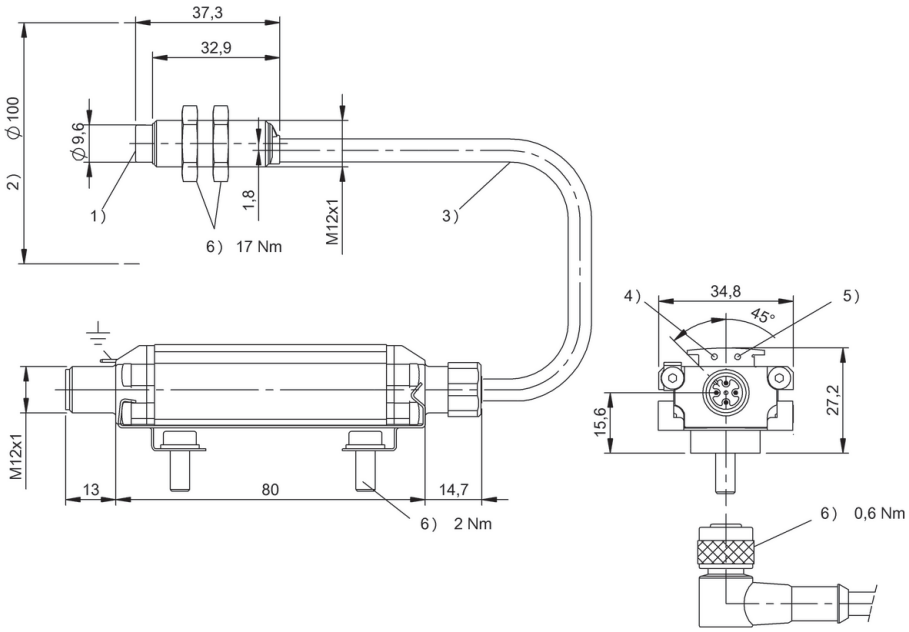

1) Active area, 2) Free zone, 3) Cable length see text, 4) LED (Power), 5) LED (CP), 6) Tightening torque

Do you need more details? Our Product Finder at www.balluff.com provides you with product-specific information, including technical drawings, data sheets, user guides and more for each individual product. All items are available for download.

For processor units BIS V-6...	**BIS00T8** BIS VM-307-001-S4
Product Group	HF (13.56 MHz)
Dimension	Ø 12 x 37.3 mm
Installation	metal-free (clear zone)
Antenna type	round
Supported data carrier types	DIN ISO 14443, DIN ISO 15693
Connection	Connector, 4-pin, 0.50 m, PU
Housing material	Brass, interface aluminum
Ambient temperature	0...70 °C
Protection degree	IP67
Approval/Conformity	CE, UL-FILE E227256, Vol.X1, BIS

Appropriate data carrier

	BIS0040		BIS0042		BIS0044		BIS0048		BIS004A			BIS00YK		BIS00M9 BIS00M8		BIS00NU BIS00NW BIS0100	
Data carrier distance to metal	>10	>0	>10	>0	>25		>10	>0	>10	>0		>10	>0	>0		>0	
Data carrier clear zone	>60	>0	>60	>0	>80		>60	>0	>60	>0		>60	>60	>100		>100	
Working distance for writing	0-6	0-4	0-8	0-6	0-13		0-5	0-4	0-7	0-5		0-10	0-8	0-16		0-12	
Working distance for reading	0-6	0-4	0-8	0-6	0-13		0-5	0-4	0-7	0-5		0-10	0-8	0-16		0-12	
Offset at distance																	
0	±3	±3	±4	±4	±6		±3	±3	±4	±3	0	±7	±5	±9		±7	
5	±2		±4	±2	±6		±2		±3	±2	5	±7	±5	±9		±7	
9					±4						7	±6	±4	±9		±6	
12					±2						8	±6	±2	±9		±6	
15											10	±3		±8		±6	
16											12			±8		±3	
18											14			±8			
20											16			±3			

Dimensions in mm

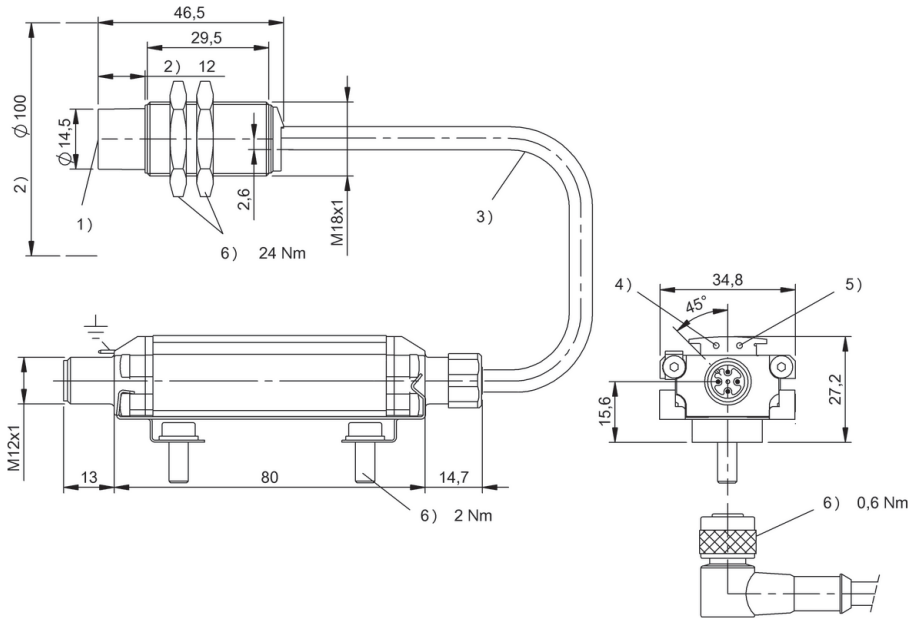

1) Sensing surface, 2) Clear zone, 3) Cable length see text, 4) LED (Power), 5) LED (CP), 6) Tightening torque

Do you need more details? Our Product Finder at www.balluff.com provides you with product-specific information, including technical drawings, data sheets, user guides and more for each individual product. All items are available for download.

For processor units BIS M-60...	**BIS0057** BIS M-302-001-S115
Product Group	HF (13.56 MHz)
Dimension	Ø 18 x 92.5 mm
Installation	metal-free (clear zone)
Antenna type	round
Supported data carrier types	DIN ISO 14443, DIN ISO 15693
Connection	Male, 8-pin
Housing material	Brass, nuts nickel plated brass
Ambient temperature	0...70 °C
Protection degree	IP67
Approval/Conformity	CE, FCC Part 15, IC RSS-210, UL-FILE E227256, Vol.X1, BIS

Appropriate data carrier

	BIS003Y			BIS003Z			BIS0040		BIS0042		BIS0048		BIS004A		BIS0043	
Data carrier distance to metal	>25	>10	>5	>50	>25	>10	>10	>0	>10	>0	>10	>0	>10	>0	>25	>0
Data carrier clear zone	>60	>50	>50	>60	>50	>50	>60	>0	>60	>0	>60	>0	>60	>0	>60	>0
Working distance for writing	0-16	0-15	0-10	0-20	0-18	0-10	0-7	0-5	0-9	0-6	0-7	0-5	0-9	0-6	0-20	0-12
Working distance for reading	0-16	0-15	0-10	0-20	0-18	0-10	0-7	0-5	0-9	0-6	0-7	0-5	0-9	0-6	0-20	0-12
Offset at distance																
0	±10	±8	±4	±18	±14	±8	±5	±4	±5	±5	±4	±3	±4	±3	±14	±10
5	±10	±8	±4	±18	±14	±6	±4	±3	±5	±3.5	±3	±2	±3	±2	±12	±8
9	±10	±7	±2	±16	±12	±4			±3.5						±12	±6
12	±8	±6		±14	±8										±10	±4
15	±7	±4		±12	±6										±10	
16	±4			±10	±4										±7	
18				±8	±4										±7	
20				±4											±5	
22																
25																
30																

Dimensions in mm

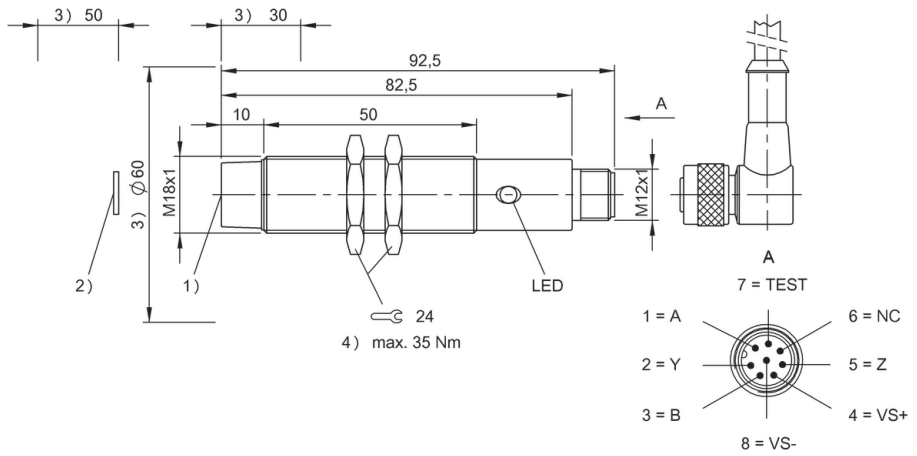

1) Sensing surface, 2) Data carrier, 3) Clear zone, 4) Tightening torque

	BIS0044			BIS0045			BIS0046				BIS00M9 BIS00M8		BIS00NU BIS00NW BIS0100		BIS00UC BIS00UE		BIS019C		BIS019E	
	>25	>10	>5	>25	>10	>5	>50	>25	>20		>0		>0		>10		>0	>0	>0	>0
	>80	>50	>50	>80	>50	>50	>150	>90	>70		>100		>100		>60		>100	>0	>100	>0
	0-16	0-12	0-8	0-20	0-12	0-5	0-30	0-22	0-12		0-17		0-13		0-7		0-8	0-7	0-12	0-11
	0-16	0-12	0-8	0-20	0-12	0-5	0-30	0-22	0-12		0-17		0-13		0-7		0-8	0-7	0-12	0-11
	±8	±6	±4	±12	±8	±7	±20	±16	±14	0	±10		±8		±4		±6	±4.5	±7	±6
	±8	±6	±4	±12	±8	±4	±20	±16	±14	5	±10		±8		±4		±6	±4.5	±7	±6
	±6	±5		±10	±6		±18	±16	±10	7	±10		±7		±4		±5.5	±4	±7	±6
	±4	±3		±10	±4		±18	±14	±6	8	±10		±7				±3	±2	±6.5	±5.5
	±4			±10			±18	±14		10	±9		±7				±3		±6.5	±5.5
	±3			±5			±16	±12		13	±9		±4						±6.5	±5.5
				±5			±16	±12		14	±9								±6.5	±3
				±5			±16	±12		17	±4								±3	±3
							±12	±8		22									±3	
							±12			25										
							±8			30										

Do you need more details? Our Product Finder at www.balluff.com provides you with product-specific information, including technical drawings, data sheets, user guides and more for each individual product. All items are available for download.

For processor unit BIS00EP	**BIS0059** BIS M-302-003-S115
Product Group	HF (13.56 MHz)
Dimension	Ø 18 x 92.5 mm
Installation	metal-free (clear zone)
Antenna type	round
Supported data carrier types	DIN ISO 14443, DIN ISO 15693
Connection	Male, 8-pin
Housing material	Brass, nuts nickel plated brass
Ambient temperature	0...70 °C
Protection degree	IP67
Approval/Conformity	CE, FCC Part 15, IC RSS-210, UL-FILE E227256, Vol.X1, BIS

Appropriate data carrier

	BIS003Y			BIS003Z			BIS0040		BIS0042		BIS0048		BIS004A		BIS0043	
Data carrier distance to metal	>25	>10	>5	>50	>25	>10	>10	>0	>10	>0	>10	>0	>10	>0	>25	>0
Data carrier clear zone	>60	>50	>50	>60	>50	>50	>60	>0	>60	>0	>60	>0	>60	>0	>60	>0
Working distance for writing	0-16	0-15	0-10	0-20	0-18	0-10	0-7	0-5	0-9	0-6	0-7	0-5	0-9	0-6	0-20	0-12
Working distance for reading	0-16	0-15	0-10	0-20	0-18	0-10	0-7	0-5	0-9	0-6	0-7	0-5	0-9	0-6	0-20	0-12
Offset at distance																
0	±10	±8	±4	±18	±14	±8	±5	±4	±5	±5	±4	±3	±4	±3	±14	±10
5	±10	±8	±4	±18	±14	±6	±4	±3	±5	±3.5	±3	±2	±3	±2	±12	±8
9	±10	±7	±2	±16	±12	±4			±3.5						±12	±6
12	±8	±6		±14	±8										±10	±4
15	±7	±4		±12	±6										±10	
16	±4			±10	±4										±7	
18				±8	±4										±7	
20				±4											±5	
22																
25																
30																

Dimensions in mm

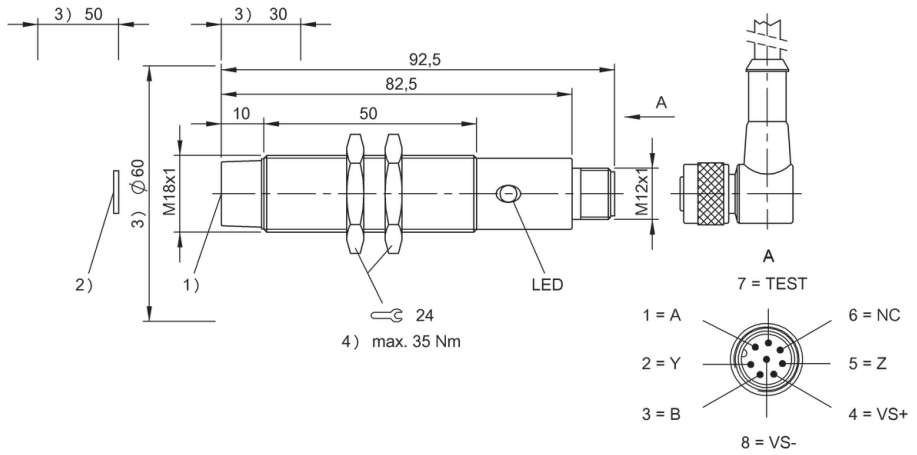

1) Sensing surface, 2) Data carrier, 3) Clear zone, 4) Tightening torque

	BIS0044			BIS0045			BIS0046				BIS00M9 BIS00M8		BIS00NU BIS00NW BIS0100		BIS00UC BIS00UE		BIS019C		BIS019E	
	>25	>10	>5	>25	>10	>5	>50	>25	>20		>0		>0		>10		>0	>0	>0	>0
	>80	>50	>50	>80	>50	>50	>150	>90	>70		>100		>100		>60		>100	>0	>100	>0
	0-16	0-12	0-8	0-20	0-12	0-5	0-30	0-22	0-12		0-17		0-13		0-7		0-8	0-7	0-12	0-11
	0-16	0-12	0-8	0-20	0-12	0-5	0-30	0-22	0-12		0-17		0-13		0-7		0-8	0-7	0-12	0-11
	±8	±6	±4	±12	±8	±7	±20	±16	±14	0	±10		±8		±4		±6	±4.5	±7	±6
	±8	±6	±4	±12	±8	±4	±20	±16	±14	5	±10		±8		±4		±6	±4.5	±7	±6
	±6	±5		±10	±6		±18	±16	±10	7	±10		±7		±4		±5.5	±4	±7	±6
	±4	±3		±10	±4		±18	±14	±6	8	±10		±7				±3	±2	±6.5	±5.5
	±4			±10			±18	±14		10	±9		±7				±3		±6.5	±5.5
	±3			±5			±16	±12		13	±9		±4						±6.5	±5.5
				±5			±16	±12		14	±9								±6.5	±3
				±5			±16	±12		17	±4								±3	±3
							±12	±8		22									±3	
							±12			25										
							±8			30										

For processor units BIS M-60...	**BIS005A** BIS M-304-001-S115
Product Group	HF (13.56 MHz)
Dimension	Ø 18 x 95.5 mm
Installation	metal-free (clear zone)
Antenna type	round
Supported data carrier types	DIN ISO 14443, DIN ISO 15693
Connection	Male, 8-pin
Housing material	Brass, nuts nickel plated brass
Ambient temperature	0...70 °C
Protection degree	IP67
Approval/Conformity	CE, FCC Part 15, IC RSS-210, UL-FILE E227256, Vol.X1, BIS

Appropriate data carrier

	BIS003Y			BIS003Z			BIS0040		BIS0042		BIS0048		BIS004A		BIS0043	
Data carrier distance to metal	>25	>10	>5	>50	>25	>10	>10	>0	>10	>0	>10	>0	>10	>0	>25	>0
Data carrier clear zone	>60	>50	>50	>60	>50	>50	>60	>0	>60	>0	>60	>0	>60	>0	>60	>0
Working distance for writing	0-14	0-10	0-8	0-18	0-15	0-10	0-5	0-5	0-7	0-6	0-5	0-4	0-7	0-5	0-18	0-10
Working distance for reading	0-14	0-10	0-8	0-18	0-15	0-10	0-5	0-5	0-7	0-6	0-5	0-4	0-7	0-5	0-18	0-10
Offset at distance																
0	±10	±8	±4	±18	±14	±8	±5	±4	±5	±5	±4	±2	±4	±3	±14	±10
5	±10	±8	±4	±18	±14	±6	±4	±3	±5	±3.5	±3		±3	±2	±12	±8
9	±10	±7		±16	±12	±4			±3						±12	±6
12	±8			±14	±8										±10	
15				±12	±6										±10	
16				±10											±7	
18				±8											±5	

Dimensions in mm

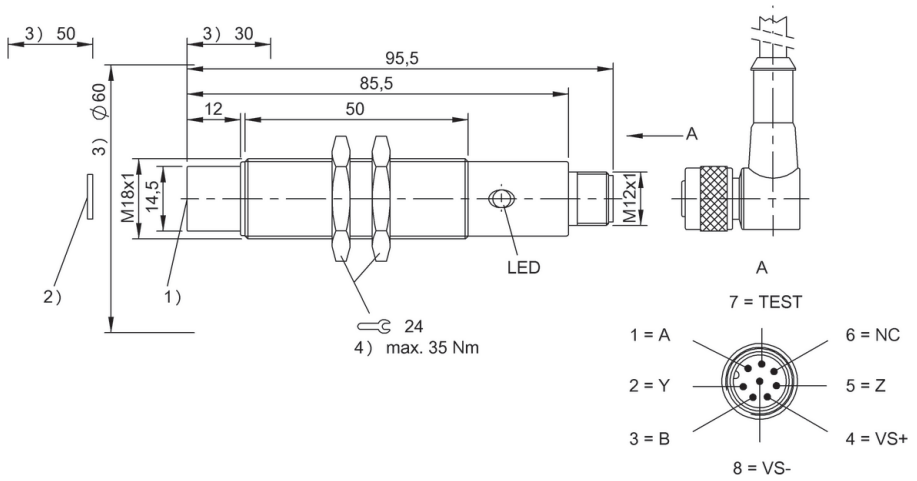

1) Sensing surface, 2) Data carrier, 3) Clear zone, 4) Tightening torque

	BIS0044				BIS019C		BIS019E	
	>25	>10	>5		>0	>0	>0	>0
	>80	>50	>50		>100	>0	>100	>0
	0-14	0-10	0-8		0-7	0-6.5	0-10	0-10
	0-14	0-10	0-8		0-7	0-6.5	0-10	0-10
	±8	±6	±4	0	±5	±5	±6.5	±6.5
	±8	±6	±4	2	±5	±5	±6.5	±6.5
	±6	±5		5	±4	±4	±6.5	±6.5
	±4			6	±2	±2	±6	±6
				7	±2		±6	±6
				8			±6	±6
				10			±2	±2

Do you need more details? Our Product Finder at www.balluff.com provides you with product-specific information, including technical drawings, data sheets, user guides and more for each individual product. All items are available for download.

For processor units BIS M-60...	**BIS0053** BIS M-300-001-S115
Product Group	HF (13.56 MHz)
Dimension	Ø 30 x 83 mm
Installation	metal-free (clear zone)
Antenna type	round
Supported data carrier types	DIN ISO 14443, DIN ISO 15693
Connection	Male, 8-pin
Housing material	Brass, nuts nickel plated brass
Ambient temperature	0...70 °C
Protection degree	IP67
Approval/Conformity	CE, FCC Part 15, IC RSS-210, UL-FILE E227256, Vol.X1, BIS

Appropriate data carrier

	BIS003Y			BIS003Z			BIS0040		BIS0042		BIS0043			BIS0044		
Data carrier distance to metal	>25	>10	>5	>50	>15	>10	>20	>5	>20	>5	>25	>0		>25	>10	>5
Data carrier clear zone	>100	>60	>50	>150	>90	>70	>100	>100	>100	>100	>100	>0		>100	>60	>50
Working distance for writing	0-22	0-20	0-15	0-32	0-22	0-12	0-9	0-9	0-11	0-11	0-30	0-16		0-22	0-16	0-10
Working distance for reading	0-22	0-20	0-15	0-32	0-22	0-12	0-9	0-9	0-11	0-11	0-30	0-16		0-22	0-16	0-10
Offset at distance																
0	±15	±12	±8	±20	±15	±6	±7	±6	±10	±7	±18	±10	0	±14	±8	±7
5	±15	±12	±8	±20	±15	±6	±7	±6	±8	±7	±18	±10	5	±14	±8	±7
9	±15	±10	±6	±20	±15	±5	±2	±1	±5	±3	±18	±8	8	±12	±6	±2
12	±15	±8	±4	±20	±15	±4					±16	±6	10	±12	±6	±2
15	±15	±8	±4	±20	±12						±16	±6	12	±12	±5	
16	±12	±6		±20	±10						±16	±4	15	±12	±4	
18	±12	±6		±20	±8						±16		16	±10	±2	
20	±12	±4		±20	±6						±16		18	±10		
22	±4			±18	±4						±14		20	±10		
25				±14							±14		22	±6		
30				±10							±10		25			
32				±4									30			
													32			
													35			
													40			
													42			

Dimensions in mm

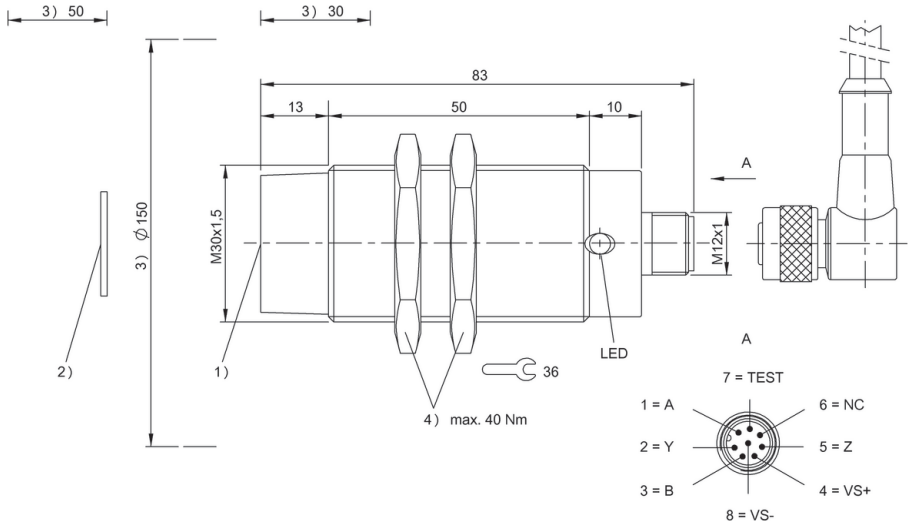

1) Sensing surface, 2) Data carrier, 3) Clear zone, 4) Tightening torque

	BIS0045			BIS0046			BIS00YE		BIS00Y4			BIS00LC		BIS00M9 BIS00M8		BIS00NU BIS00NW BIS0100	
	>25	>10	>5	>50	>15	>10	>25	>0	>50			>25	>0	>0		>0	>0
	>100	>60	>50	>150	>90	>70	>100	>100	>150			>100	>100	>100		>100	>100
	0-28	0-18	0-10	0-44	0-25	0-15	0-30	0-8	0-42			0-27	0-13	0-22		0-22	0-13
	0-28	0-18	0-10	0-44	0-25	0-15	0-30	0-8	0-42			0-27	0-13	0-22		0-22	0-13
	±16	±10	±7	±25	±18	±15	±18	±8	±30		0	±16	±10	±13		±13	±10
	±16	±10	±7	±25	±18	±15	±18	±6	±30		5	±16	±10	±13		±13	±10
	±14	±8	±2	±25	±16	±12	±18	±3	±30		10	±16	±7	±13		±13	±9
	±14	±8	±2	±25	±16	±12	±18		±30		13	±14	±5	±11		±11	±5
	±14	±7		±24	±15	±10	±16		±28		15	±14		±11		±11	
	±14	±6		±24	±14	±8	±16		±28		18	±14		±11		±11	
	±14	±3		±24	±12		±16		±28		20	±14		±7		±7	
	±14	±2		±24	±12		±16		±28		22	±12		±7		±7	
	±14			±24	±10		±16		±28		25	±12					
	±12			±22	±8		±16		±24		27	±5					
	±12			±22	±6		±16		±24								
				±22			±10		±24								
				±16					±24								
				±16					±24								
				±16					±5								
				±10					±5								

Do you need more details? Our Product Finder at www.balluff.com provides you with product-specific information, including technical drawings, data sheets, user guides and more for each individual product. All items are available for download.

For processor unit BIS00EP	**BIS0054** BIS M-300-003-S115
Product Group	HF (13.56 MHz)
Dimension	Ø 30 x 83 mm
Installation	metal-free (clear zone)
Antenna type	round
Supported data carrier types	DIN ISO 14443, DIN ISO 15693
Connection	Male, 8-pin
Housing material	Brass, nuts nickel plated brass
Ambient temperature	0...70 °C
Protection degree	IP67
Approval/Conformity	CE, FCC Part 15, IC RSS-210, UL-FILE E227256, Vol.X1, BIS

Appropriate data carrier

	BIS003Y			BIS003Z			BIS0040		BIS0042		BIS0043			BIS0044		
Data carrier distance to metal	>25	>10	>5	>50	>15	>10	>20	>5	>20	>5	>25	>0		>25	>10	>5
Data carrier clear zone	>100	>60	>50	>150	>90	>70	>100	>100	>100	>100	>100	>0		>100	>60	>50
Working distance for writing	0-22	0-20	0-15	0-32	0-22	0-12	0-9	0-9	0-11	0-11	0-30	0-16		0-22	0-16	0-10
Working distance for reading	0-22	0-20	0-15	0-32	0-22	0-12	0-9	0-9	0-11	0-11	0-30	0-16		0-22	0-16	0-10
Offset at distance																
0	±15	±12	±8	±20	±15	±6	±7	±6	±10	±7	±18	±10	0	±14	±8	±7
5	±15	±12	±8	±20	±15	±6	±7	±6	±8	±7	±18	±10	5	±14	±8	±7
9	±15	±10	±6	±20	±15	±5	±2	±1	±5	±3	±18	±8	8	±12	±6	±2
12	±15	±8	±4	±20	±15	±4					±16	±6	10	±12	±6	±2
15	±15	±8	±4	±20	±12						±16	±6	12	±12	±5	
16	±12	±6		±20	±10						±16	±4	15	±12	±4	
18	±12	±6		±20	±8						±16		16	±10	±2	
20	±12	±4		±20	±6						±16		18	±10		
22	±4			±18	±4						±14		20	±10		
25				±14							±14		22	±6		
30				±10							±10		25			
32				±4									30			

Dimensions in mm

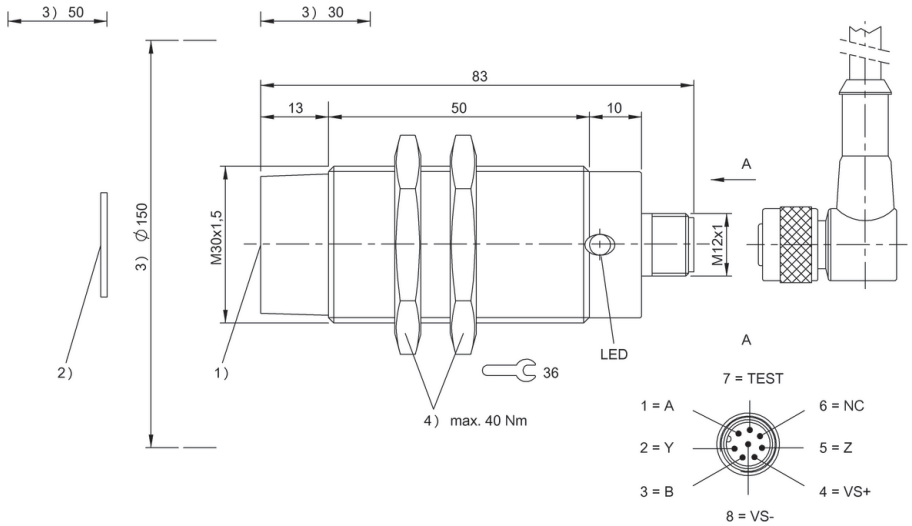

1) Sensing surface, 2) Data carrier, 3) Clear zone, 4) Tightening torque

	BIS0045			BIS0046			BIS00YE		BIS00Y4			BIS00LC		BIS00M9 BIS00M8		BIS00NU BIS00NW BIS0100	
	>25	>10	>5	>50	>15	>10	>25	>0	>50			>25	>0	>0		>0	>0
	>100	>60	>50	>150	>90	>70	>100	>100	>150			>100	>100	>100		>100	>100
	0-28	0-18	0-10	0-44	0-25	0-15	0-30	0-8	0-42			0-27	0-13	0-22		0-22	0-13
	0-28	0-18	0-10	0-44	0-25	0-15	0-30	0-8	0-42			0-27	0-13	0-22		0-22	0-13
	±16	±10	±7	±25	±18	±15	±18	±8	±30		0	±16	±10	±13		±13	±10
	±16	±10	±7	±25	±18	±15	±18	±6	±30		5	±16	±10	±13		±13	±10
	±14	±8	±2	±25	±16	±12	±18	±3	±30		10	±16	±7	±13		±13	±9
	±14	±8	±2	±25	±16	±12	±18		±30		13	±14	±5	±11		±11	±5
	±14	±7		±24	±15	±10	±16		±28		15	±14		±11		±11	
	±14	±6		±24	±14	±8	±16		±28		18	±14		±11		±11	
	±14	±3		±24	±12		±16		±28		20	±14		±7		±7	
	±14	±2		±24	±12		±16		±28		22	±12		±7		±7	
	±14			±24	±10		±16		±28		25	±12					
	±12			±22	±8		±16		±24		27	±5					
	±12			±22	±6		±16		±24								
				±22			±10		±24								

Do you need more details? Our Product Finder at www.balluff.com provides you with product-specific information, including technical drawings, data sheets, user guides and more for each individual product. All items are available for download.

For processor units BIS M-60...	**BIS0055** BIS M-301-001-S115
Product Group	HF (13.56 MHz)
Dimension	80 x 40 x 84.5 mm
Installation	metal-free (clear zone)
Antenna type	round
Supported data carrier types	DIN ISO 14443, DIN ISO 15693
Connection	Male, 8-pin
Housing material	PBT
Ambient temperature	0...70 °C
Protection degree	IP67
Approval/Conformity	CE, FCC Part 15, IC RSS-210, UL-FILE E227256, Vol.X1, BIS

Appropriate data carrier

	BIS003Y			BIS003Z			BIS0043 BIS0111		BIS0044		BIS0045		BIS0046		BIS0047		BIS00L8	
Data carrier distance to metal	>50	>10	>5	>50	>25	>10	>50	>20	>50	>30	>50	>30	>50	>30	>80		>1	0
Data carrier clear zone	>200	>60	>50	>200	>150	>150	>200	>60	>200	>100	>200	>100	>200	>100	>250		>70	>70
Working distance for writing	0-34	0-20	0-15	0-45	0-43	0-35	0-45	8-22	0-32	0-20	0-45	0-30	0-70	0-45	0-50		0-32	0-32
Working distance for reading	0-34	0-20	0-15	0-45	0-43	0-35	0-45	8-22	0-32	0-20	0-45	0-30	0-70	0-45	0-50		0-32	0-32
Offset at distance																		
0	±22	±18	±14	±30	±24	±18	±32	±20	±28	±20	±32	±22	±40	±25	±30		±30	±25
5	±22	±18	±14	±30	±24	±18	±32	±20	±28	±20	±32	±22	±40	±25	±30		±30	±25
9	±22	±18	±14	±30	±24	±18	±32	±20	±28	±18	±32	±22	±40	±25	±30		±30	±25
12	±22	±18	±10	±30	±24	±18	±32	±18	±24	±18	±32	±22	±40	±25	±30		±25	±25
15	±22	±18	±10	±30	±24	±18	±32	±18	±24	±15	±32	±20	±40	±25	±30		±25	±25
16	±22	±16	±8	±30	±24	±18	±32	±18	±24	±15	±32	±20	±40	±25	±30		±25	±25
18	±22	±16	±6	±30	±24	±18	±32	±16	±24	±12	±32	±18	±40	±25	±30		±25	±22
20	±22	±16	±4	±30	±24	±18	±32	±16	±24	±8	±32	±16	±40	±25	±30		±25	±22
22	±20	±10		±30	±24	±15	±25	±14	±20		±25	±14	±40	±22	±30		±25	±22
25	±15	±10		±30	±24	±15	±25		±20		±25	±12	±40	±22	±30		±25	±22
30	±15	±4		±30	±20	±12	±25		±12		±25	±10	±40	±22	±28		±20	±17
32	±8			±30	±18	±8	±20		±12		±20		±40	±22	±24		±20	±17
35	±4			±30	±16	±4	±20				±20		±40	±20	±22			
40				±24	±10		±20				±20		±40	±20	±18			
43				±20	±4		±12				±12		±35	±15	±14			
45				±16			±12				±12		±35	±12	±12			
50				±4									±35		±4			

Dimensions in mm

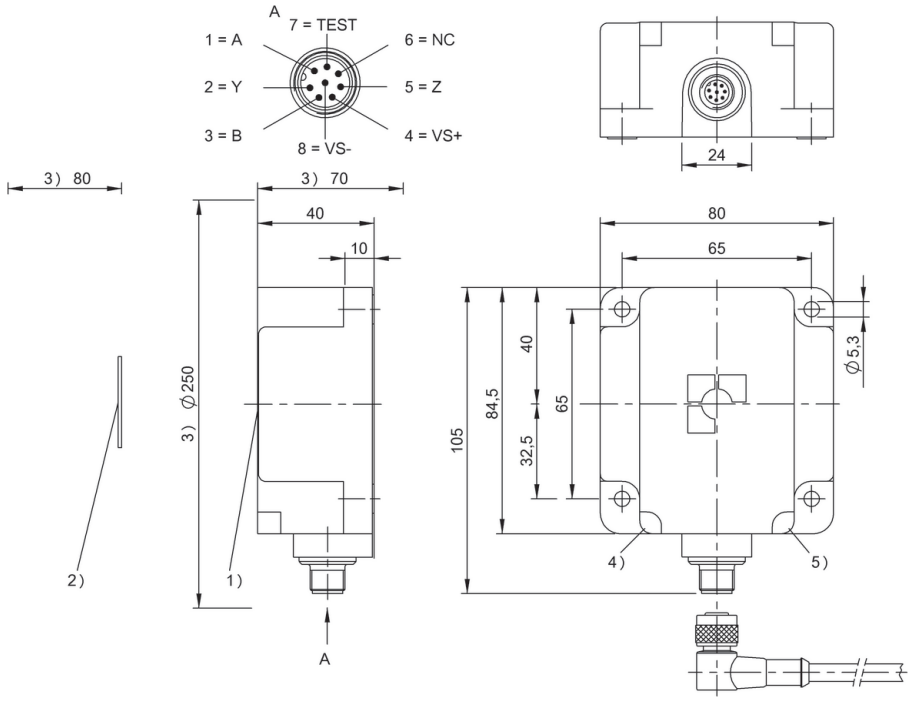

1) Sensing surface, 2) Data carrier, 3) Clear zone, 4) LED (Power), 5) LED (TP)

Do you need more details? Our Product Finder at www.balluff.com provides you with product-specific information, including technical drawings, data sheets, user guides and more for each individual product. All items are available for download.

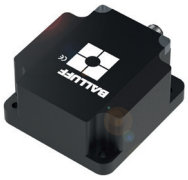

For processor unit BIS00EP	**BIS0056** BIS M-301-003-S115
Product Group	HF (13.56 MHz)
Dimension	80 x 40 x 84.5 mm
Installation	metal-free (clear zone)
Antenna type	round
Supported data carrier types	DIN ISO 14443, DIN ISO 15693
Connection	Male, 8-pin
Housing material	PBT
Ambient temperature	0...70 °C
Protection degree	IP67
Approval/Conformity	CE, FCC Part 15, IC RSS-210, UL-FILE E227256, Vol.X1, BIS

Appropriate data carrier

	BIS003Y			BIS003Z			BIS0043 BIS0111		BIS0044		BIS0045		BIS0046		BIS0047		BIS00L8	
Data carrier distance to metal	>50	>10	>5	>50	>25	>10	>50	>20	>50	>30	>50	>30	>50	>30	>80		>1	0
Data carrier clear zone	>200	>60	>50	>200	>150	>150	>200	>60	>200	>100	>200	>100	>200	>100	>250		>70	>70
Working distance for writing	0-34	0-20	0-15	0-45	0-43	0-35	0-45	8-22	0-32	0-20	0-45	0-30	0-70	0-45	0-50		0-32	0-32
Working distance for reading	0-34	0-20	0-15	0-45	0-43	0-35	0-45	8-22	0-32	0-20	0-45	0-30	0-70	0-45	0-50		0-32	0-32
Offset at distance																		
0	±22	±18	±14	±30	±24	±18	±32	±20	±28	±20	±32	±22	±40	±25	±30		±30	±25
5	±22	±18	±14	±30	±24	±18	±32	±20	±28	±20	±32	±22	±40	±25	±30		±30	±25
9	±22	±18	±14	±30	±24	±18	±32	±20	±28	±18	±32	±22	±40	±25	±30		±30	±25
12	±22	±18	±10	±30	±24	±18	±32	±18	±24	±18	±32	±22	±40	±25	±30		±25	±25
15	±22	±18	±10	±30	±24	±18	±32	±18	±24	±15	±32	±20	±40	±25	±30		±25	±25
16	±22	±16	±8	±30	±24	±18	±32	±18	±24	±15	±32	±20	±40	±25	±30		±25	±25
18	±22	±16	±6	±30	±24	±18	±32	±16	±24	±12	±32	±18	±40	±25	±30		±25	±22
20	±22	±16	±4	±30	±24	±18	±32	±16	±24	±8	±32	±16	±40	±25	±30		±25	±22
22	±20	±10		±30	±24	±15	±25	±14	±20		±25	±14	±40	±22	±30		±25	±22
25	±15	±10		±30	±24	±15	±25		±20		±25	±12	±40	±22	±30		±25	±22
30	±15	±4		±30	±20	±12	±25		±12		±25	±10	±40	±22	±28		±20	±17
32	±8			±30	±18	±8	±20		±12		±20		±40	±22	±24		±20	±17
35	±4			±30	±16	±4	±20				±20		±40	±20	±22			
40				±24	±10		±20				±20		±40	±20	±18			
43				±20	±4		±12				±12		±35	±15	±14			
45				±16			±12				±12		±35	±12	±12			
50				±4									±35		±4			

Dimensions in mm

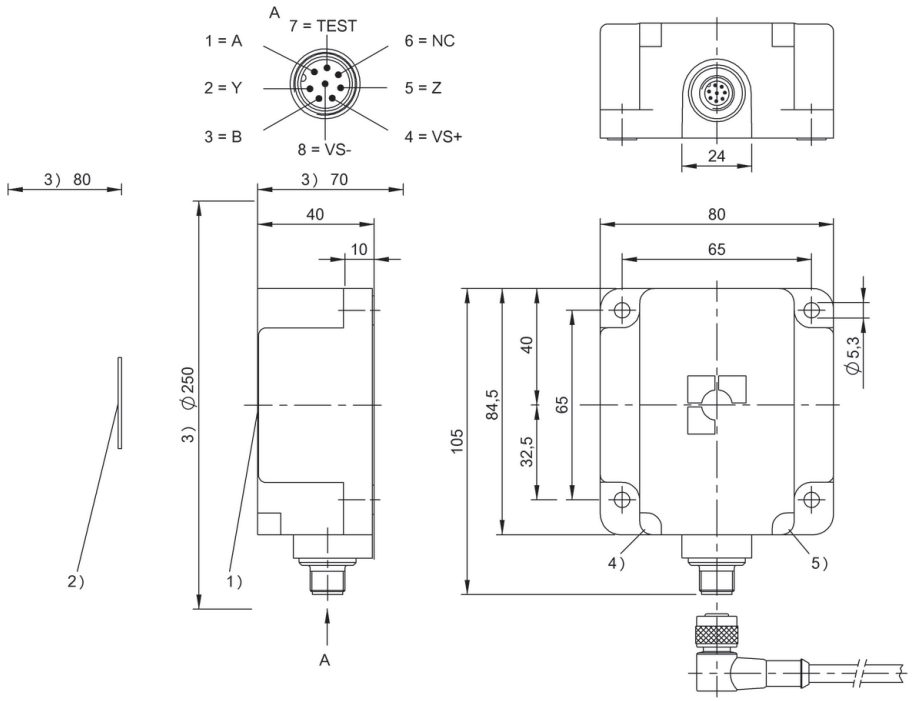

1) Sensing surface, 2) Data carrier, 3) Clear zone, 4) LED (Power), 5) LED (TP)

Do you need more details? Our Product Finder at www.balluff.com provides you with product-specific information, including technical drawings, data sheets, user guides and more for each individual product. All items are available for download.

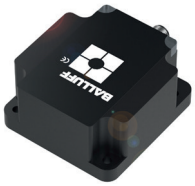

For processor units BIS M-60...	**BIS00M6** BIS M-341-001-S115
Product Group	HF (13.56 MHz)
Dimension	80 x 40 x 84.5 mm
Installation	metal-free (clear zone)
Antenna type	round
Supported data carrier types	DIN ISO 14443, DIN ISO 15693
Connection	Male, 8-pin
Housing material	PBT
Ambient temperature	0...70 °C
Protection degree	IP67
Approval/Conformity	CE, FCC Part 15, IC RSS-210, UL-FILE E227256, Vol.X1, BIS

Appropriate data carrier

	BIS0046		BIS0043			BIS00M9 BIS00M8		BIS00NU BIS00NW BIS0100	
Data carrier distance to metal	>50		>50	>0		>0		>0	
Data carrier clear zone	>200		>200	>0		>100		>100	
Working distance for writing	35-90		20-60	0-50		0-46		0-23	
Working distance for reading	35-90		20-60	0-50		0-46		0-23	
Offset at distance									
0				±30	0	±33		±25	
5				±30	5	±33		±25	
9				±30	10	±33		±25	
12				±30	12	±33		±20	
15				±30	16	±33		±20	
16				±30	20	±30		±20	
18				±30	23	±30		±10	
20			±35	±30	25	±30			
22			±35	±30	30	±30			
25			±35	±30	35	±24			
30			±35	±30	40	±24			
35	±55		±30	±20	46	±8			
40	±55		±30	±20	50				
45	±55		±30	±20	55				
50	±55		±30	±20	60				
60	±55		±30		65				
70	±40				70				
80	±40				80				
90	±20				90				

Dimensions in mm

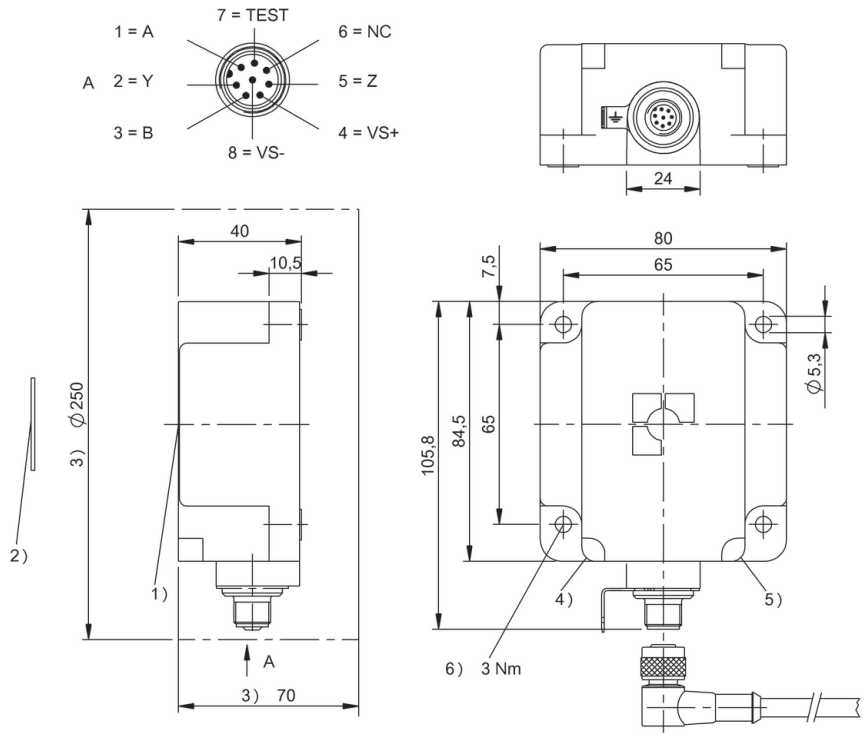

1) Sensing surface, 2) Data carrier, 3) Clear zone, 4) LED (Power), 5) LED (TP)

Do you need more details? Our Product Finder at www.balluff.com provides you with product-specific information, including technical drawings, data sheets, user guides and more for each individual product. All items are available for download.

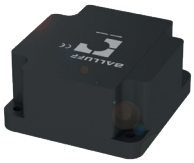

For processor units BIS M-60...	**BIS005C** BIS M-351-001-S115
Product Group	HF (13.56 MHz)
Dimension	80 x 40 x 84.5 mm
Installation	metal-free (clear zone)
Antenna type	Rod
Supported data carrier types	DIN ISO 14443, DIN ISO 15693
Connection	Male, 8-pin
Housing material	PBT
Ambient temperature	0...70 °C
Protection degree	IP67
Approval/Conformity	CE, FCC Part 15, IC RSS-210, UL-FILE E227256, Vol.X1, BIS

Appropriate data carrier

	BIS004F				BIS004H				BIS00M2				BIS00P3			
Data carrier clear zone A	>200	>200	>200	>200	>200	>200	>200	>200	>200	>200	>10	>10	>240	>240	>240	>240
Data carrier clear zone B	>200	>200	>200	>200	>200	>200	>200	>200	>200	>200	>50	>50	>480	>480	>480	>480
Data carrier clear zone C									>50	>50	>2	>2	>50	>50	0	0
Metallic mounting surface 40 × 22 mm	0-52	0-52			0-52	0-52										
Metallic mounting surface > 200 × 200 mm			0-65	0-65			0-65	0-65								
Working distance for writing	0-52	0-52	0-65	0-65	0-52	0-52	0-65	0-65	0-30	0-30	15-30	15-30	0-100	0-100	0-90	0-90
Working distance for reading	0-52	0-52	0-65	0-65	0-52	0-52	0-65	0-65	0-30	0-30	15-30	15-30	0-100	0-100	0-90	0-90
Offset at distance	X	Y	X	Y	X	Y	X	Y	X	Y	X	Y	X	Y	X	Y
0	±60	±25	±65	±26	±25	±60	±26	±65	±35	±20			±100	±20	±100	±20
5	±60	±25	±65	±26	±25	±60	±26	±65	±35	±20			±100	±20	±100	±20
12	±60	±25	±65	±25	±25	±60	±25	±65	±35	±20			±100	±20	±100	±20
15	±60	±25	±65	±25	±25	±60	±25	±65	±35	±20	±35	±15	±100	±20	±100	±20
18	±60	±25	±65	±25	±25	±60	±25	±65	±35	±20	±35	±15	±100	±20	±100	±20
20	±60	±25	±65	±25	±25	±60	±25	±65	±20	±12	±28	±15	±80	±20	±80	±20
22	±60	±25	±65	±25	±25	±60	±25	±65	±20	±12	±28	±15	±80	±20	±80	±20
25	±60	±25	±65	±25	±25	±60	±25	±65					±80	±20	±80	±20
30	±60	±25	±65	±25	±25	±60	±25	±65					±80	±20	±80	±20
32	±50	±25	±65	±25	±25	±50	±25	±65					±80	±20	±80	±20
35	±50	±25	±65	±25	±25	±50	±25	±65					±80	±20	±80	±20
40	±50	±20	±50	±25	±20	±50	±25	±50					±65	±20	±65	±20
45	±25	±20	±50	±25	±20	±25	±25	±50					±65	±20	±65	±20
50	±25	±20	±50	±25	±20	±25	±25	±50					±65	±20	±65	±20
52	±25	±8	±25	±25	±8	±25	±25	±25					±50	±20	±50	±20
60			±25	±10			±10	±25					±40	±20		
65			±25	±10			±10	±25								

Dimensions in mm

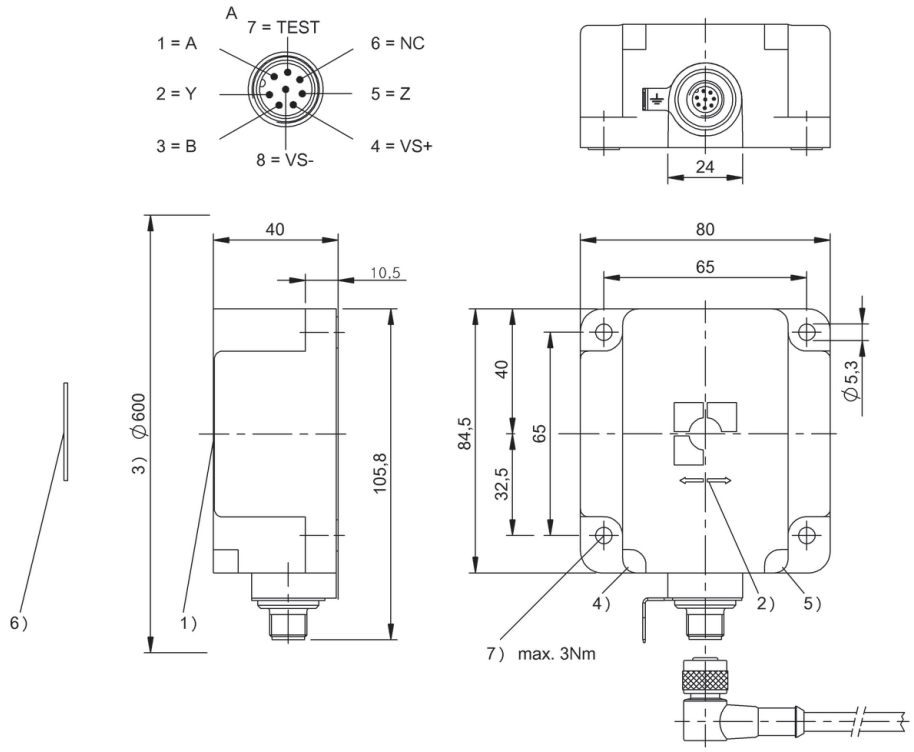

1) Sensing surface, 2) Read/write axis, 3) Clear zone, 4) LED (Power), 5) LED (TP), 6) Data carrier on steel, 7) Tightening torque

Do you need more details? Our Product Finder at www.balluff.com provides you with product-specific information, including technical drawings, data sheets, user guides and more for each individual product. All items are available for download.

For processor units BIS M-60...	**BIS00NK** BIS M-305-001-S115
Product Group	HF (13.56 MHz)
Dimension	25 x 10 x 50 mm
Installation	metal-free (clear zone)
Antenna type	round
Supported data carrier types	DIN ISO 14443, DIN ISO 15693
Connection	Plug, 8-pin, 0.50 m, PU
Housing material	ABS, GF16, interface aluminum
Ambient temperature	0...70 °C
Protection degree	IP67
Approval/Conformity	CE, UL-FILE E227256, Vol.X1, BIS, FCC, IC

Appropriate data carrier

	BIS0040		BIS0042		BIS0044		BIS0048		BIS004A			BIS0043		BIS00M9 BIS00M8		BIS00NU BIS00NW BIS0100			BIS00UC	
Data carrier distance to metal	>10	>0	>10	>0	>25		>10	>0	>10	>0		>25	>0	>0		>0			>10	>0
Data carrier clear zone	>60	>0	>60	>0	>80		>60	>0	>60	>0		>100	>0	>100		>100			>60	>60
Working distance for writing	0-6	0-4	0-8	0-6	0-13		0-5	0-4	0-7	0-5		0-17	0-11	0-17		0-12			0-7.5	0-4
Working distance for reading	0-6	0-4	0-8	0-6	0-13		0-5	0-4	0-7	0-5		0-17	0-11	0-17		0-12			0-7.5	0-4
Offset at distance																				
0	±3	±3	±4	±4	±6		±3	±3	±4	±3	0	±12	±8	±10		±7		0	±5	±3.5
5	±2		±4	±2	±6		±2		±3	±2	5	±12	±8	±10		±7		2	±5	±3.5
9					±4						8	±12	±6	±10		±6		3	±4	±3
12					±2						10	±12	±6	±9		±6		4	±4	±1
15											11	±8	±4	±9		±3		5	±4	
16											12	±8		±9		±3		6	±4	
18											15	±8		±4				7.5	±1.5	
20											17	±4		±4				10		

Dimensions in mm

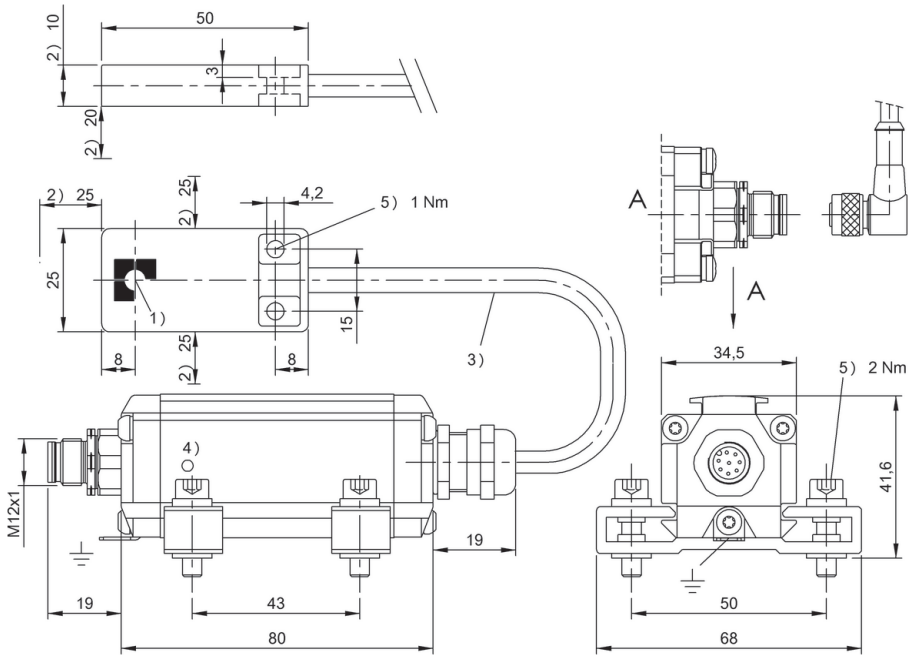

1) Sensing surface, 2) Clear zone, 3) Cable length see text, 4) LED function indicator, 5) Tightening torque

For processor units BIS M-60...	BIS00NY BIS M-352-001-S115
Product Group	HF (13.56 MHz)
Dimension	25 x 10 x 50 mm
Installation	metal-free (clear zone)
Antenna type	Rod
Supported data carrier types	DIN ISO 14443, DIN ISO 15693
Connection	Plug, 8-pin, 0.50 m, PU
Housing material	ABS, GF16, interface aluminum
Ambient temperature	0...70 °C
Protection degree	IP67
Approval/Conformity	CE, UL-FILE E227256, Vol.X1, BIS, FCC, IC

Appropriate data carrier

	BIS00NZ			BIS017F		BIS00M2			
Data carrier clear zone A	>27	>27		>200	>200	>200	>200	>200	>200
Data carrier clear zone B	>27	>27		>200	>200	>200	>200	>200	>200
Data carrier clear zone C				>50	>50	>50	>50	>0	>0
Metallic mounting surface 40 × 22 mm									
Metallic mounting surface > 200 × 200 mm									
Working distance for writing	0-22	0-22		0-17	0-17	0-17	0-17	0-20	0-20
Working distance for reading	0-22	0-22		0-17	0-17	0-17	0-17	0-20	0-20
Offset at distance	X	Y		X	Y	X	Y	X	Y
0	±25	±5	0	±22	±9	±22	±10	±25	±12
5	±25	±5	5	±22	±9	±22	±10	±25	±12
10	±25	±5	10	±19	±8	±20	±9	±25	±12
15	±25	±5	15	±12	±6	±16	±7	±22	±10
20	±15	±5	17	±3	±2	±5	±3	±18	±8
22	±15	±5	20					±8	±4

Dimensions in mm

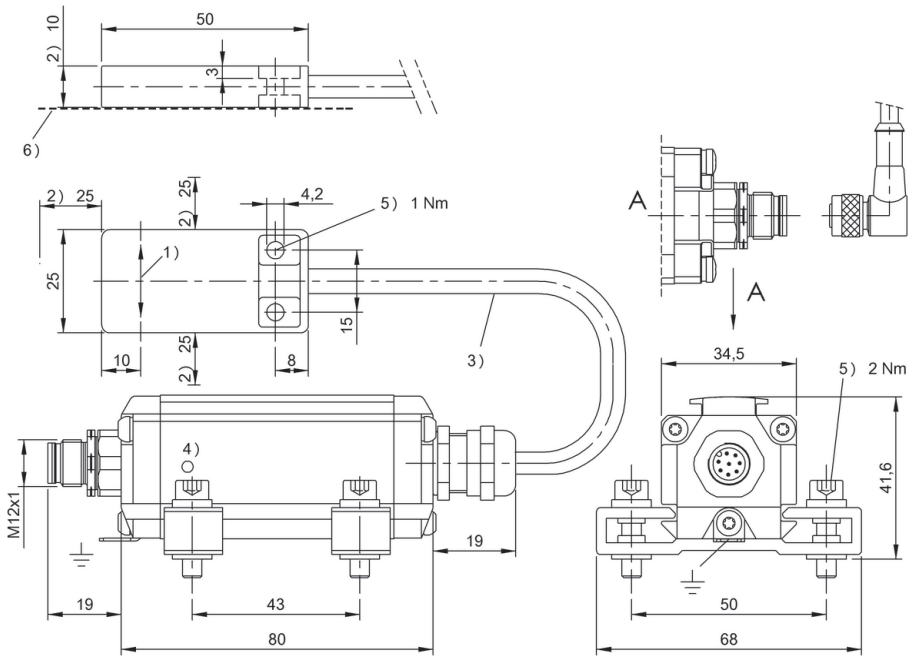

1) Read/write axis, 2) Clear zone, 3) Cable length see text, 4) LED function indicator, 5) Tightening torque, 6) Mounting on steel

For processor units BIS M-60...	**BIS00P2** BIS M-307-001-S115
Product Group	HF (13.56 MHz)
Dimension	Ø 18 x 46.5 mm
Installation	metal-free (clear zone)
Antenna type	round
Supported data carrier types	DIN ISO 14443, DIN ISO 15693
Connection	Plug, 8-pin, 0.50 m, PU
Housing material	Brass, interface aluminum
Ambient temperature	0...70 °C
Protection degree	IP67
Approval/Conformity	CE, UL-FILE E227256, Vol.X1, BIS, FCC, IC

Appropriate data carrier

	BIS0040		BIS0042		BIS0044		BIS0048		BIS004A			BIS00YK		BIS00M9 BIS00M8		BIS00NU BIS00NW BIS0100	
Data carrier distance to metal	>10	>0	>10	>0	>25		>10	>0	>10	>0		>10	>0	>0		>0	
Data carrier clear zone	>60	>0	>60	>0	>80		>60	>0	>60	>0		>60	>60	>100		>100	
Working distance for writing	0-6	0-4	0-8	0-6	0-13		0-5	0-4	0-7	0-5		0-10	0-8	0-16		0-12	
Working distance for reading	0-6	0-4	0-8	0-6	0-13		0-5	0-4	0-7	0-5		0-10	0-8	0-16		0-12	
Offset at distance																	
0	±3	±3	±4	±4	±6		±3	±3	±4	±3	0	±7	±5	±9		±7	
5	±2		±4	±2	±6		±2		±4	±2	5	±7	±5	±9		±7	
9					±4						7	±6	±4	±9		±6	
12					±2						8	±6	±2	±9		±6	
15											10	±3		±8		±6	
16											12			±8		±3	
18											14			±8			
20											16			±3			

Dimensions in mm

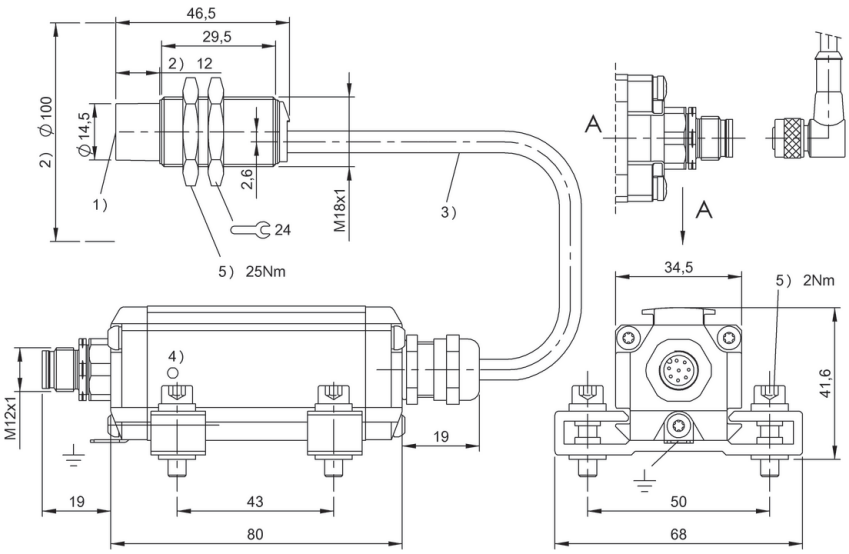

1) Sensing surface, 2) Clear zone, 3) Cable length see text, 4) LED function indicator, 5) Tightening torque

Do you need more details? Our Product Finder at www.balluff.com provides you with product-specific information, including technical drawings, data sheets, user guides and more for each individual product. All items are available for download.

For processor units BIS M-62... For processor units BIS V-6... with BIS014N	**BIS00WM** BIS M-371-000-A01
Product Group	HF (13.56 MHz)
Dimension	113.4 x 42.4 x 118 mm
Installation	metal-free (clear zone)
Antenna type	round
Supported data carrier types	DIN ISO 14443, DIN ISO 15693
Connection	Connector, RCA
Housing material	PA
Ambient temperature	-20...50 °C
Protection degree	IP65
Approval/Conformity	CE

Appropriate data carrier

	BIS0043	BIS0111	BIS0044	BIS0045	BIS0046		BIS0119		BIS00YF
Data carrier distance to metal	>40	>40	>40	>40	>40		>0		>25
Data carrier clear zone	>230	>230	>220	>230	>250		>120		>230
Working distance for writing	0-110	0-100	0-70	0-120	0-150		0-50		0-100
Working distance for reading	0-110	0-100	0-70	0-120	0-150		0-50		0-100
Offset at distance									
0	±40	±40	±40	±40	±40	0	±30	0	±75
20	±40	±40	±40	±40	±40	5	±30	20	±75
40	±40	±40	±40	±40	±40	15	±30	30	±75
60	±40	±40	±40	±40	±40	28	±30	40	±75
70	±40	±40	±25	±40	±40	35	±30	50	±70
100	±40	±25		±40	±40	50	±20	70	±70
110	±25			±40	±40			100	±25
120				±25	±40				
150					±25				

Dimensions in mm

Appropriate data carrier

	BIS00YE	BIS00YA	BIS00Y9		BIS00Y6	BIS00Y5	BIS00Y4	BIS00Y2
Data carrier distance to metal	>25	>25	>40		>40	>40	>40	>40
Data carrier clear zone	>230	>230	>230		>250	>250	>250	>250
Working distance for writing	0-100	0-40	0-70		25-140	10-205	10-205	10-135
Working distance for reading	0-100	0-40	0-70		25-140	10-205	10-205	10-135
Offset at distance								
0	±75	±30	±40	50	±75	±75	±75	±75
20	±75	±30	±40	75	±75	±75	±75	±75
30	±75	±30	±40	100	±75	±75	±75	±75
40	±75	±20	±40	120	±75	±75	±75	±75
50	±70		±40	135	±75	±75	±75	±25
70	±70		±25	140	±25	±75	±75	
100	±25			190		±75	±75	
				205		±25	±25	

Dimensions in mm

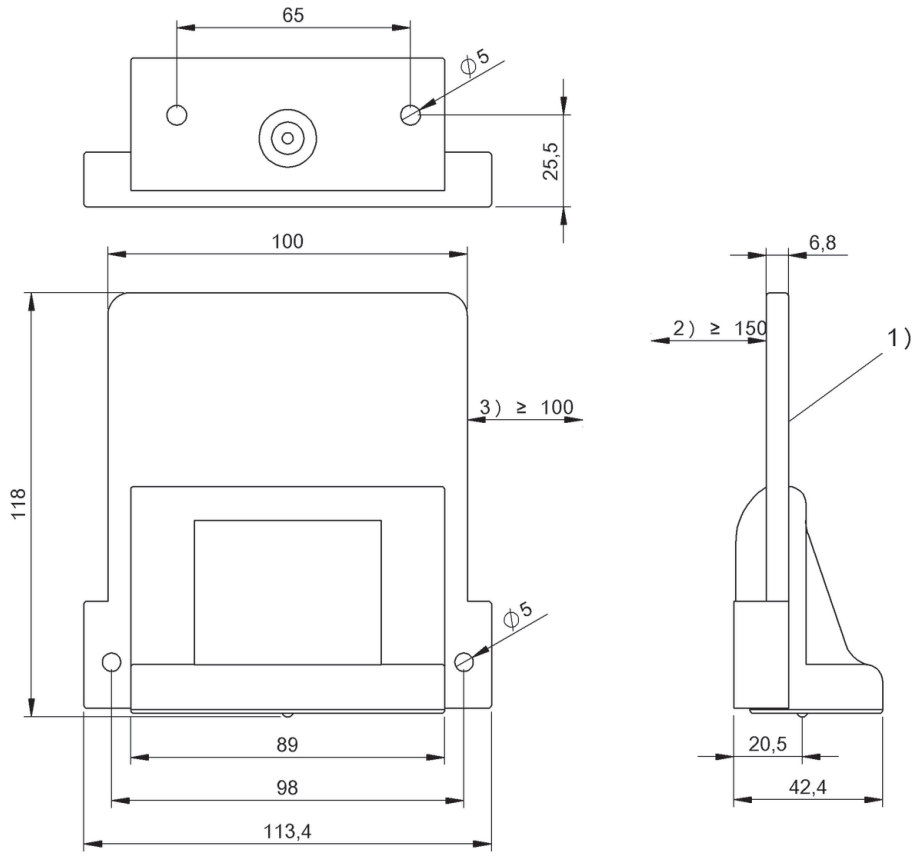

1) Sensing surface, 2) Clear zone, 3) Clear zone surrounding

Do you need more details? Our Product Finder at www.balluff.com provides you with product-specific information, including technical drawings, data sheets, user guides and more for each individual product. All items are available for download.

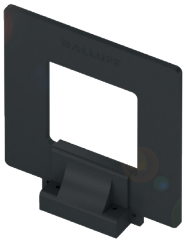

For processor units BIS M-62... For processor units BIS V-6... with BIS014N	**BIS00WL** BIS M-372-000-A01
Product Group	HF (13.56 MHz)
Dimension	200 x 42.4 x 218 mm
Installation	metal-free (clear zone)
Antenna type	round
Supported data carrier types	DIN ISO 14443, DIN ISO 15693
Connection	Connector, RCA
Housing material	PA
Ambient temperature	-20...50 °C
Protection degree	IP65
Approval/Conformity	CE

Appropriate data carrier

	BIS0043	BIS0111	BIS0044	BIS0045	BIS0046		BIS0119		BIS00YF
Data carrier distance to metal	>45	>45	>45	>45	>45		>0		>45
Data carrier clear zone	>430	>430	>420	>430	>450		>420		>430
Working distance for writing	0-160	0-150	0-115	0-175	0-235		0-65		0-160
Working distance for reading	0-160	0-150	0-115	0-175	0-235		0-65		0-160
Offset at distance									
0	±75	±75	±50	±75	±75	0	±50	0	±100
25	±75	±75	±50	±75	±75	20	±50	20	±100
50	±75	±75	±50	±75	±75	37	±50	30	±100
80	±75	±75	±50	±75	±75	65	±30	40	±100
100	±75	±75	±50	±75	±75	80		60	±100
115	±75	±75	±30	±75	±75	100		90	±100
135	±75	±75		±75	±75	115		115	±50
150	±75	±50		±75	±75			130	±50
160	±50			±75	±75			145	±50
175				±50	±75			160	±25

Dimensions in mm

Appropriate data carrier

	BIS00YE	BIS00YA	BIS00Y9		BIS00Y6	BIS00Y5	BIS00Y4	BIS00Y2
Data carrier distance to metal	>45	>45	>45		>45	>45	>45	>45
Data carrier clear zone	>430	>430	>430		>450	>450	>450	>450
Working distance for writing	0-145	0-30	0-115		0-230	0-300	0-300	0-190
Working distance for reading	0-145	0-30	0-115		0-230	0-300	0-300	0-190
Offset at distance								
0	±100	±50	±75	0	±100	±100	±100	±100
20	±100	±50	±75	50	±100	±100	±100	±100
30	±100	±30	±75	100	±100	±100	±100	±100
40	±100		±75	150	±100	±100	±100	±100
60	±100		±75	190	±100	±100	±100	±50
90	±100		±75	230	±50	±100	±100	
115	±50		±50	250		±100	±100	
130	±50			300		±50	±50	
145	±25							
160								

Dimensions in mm

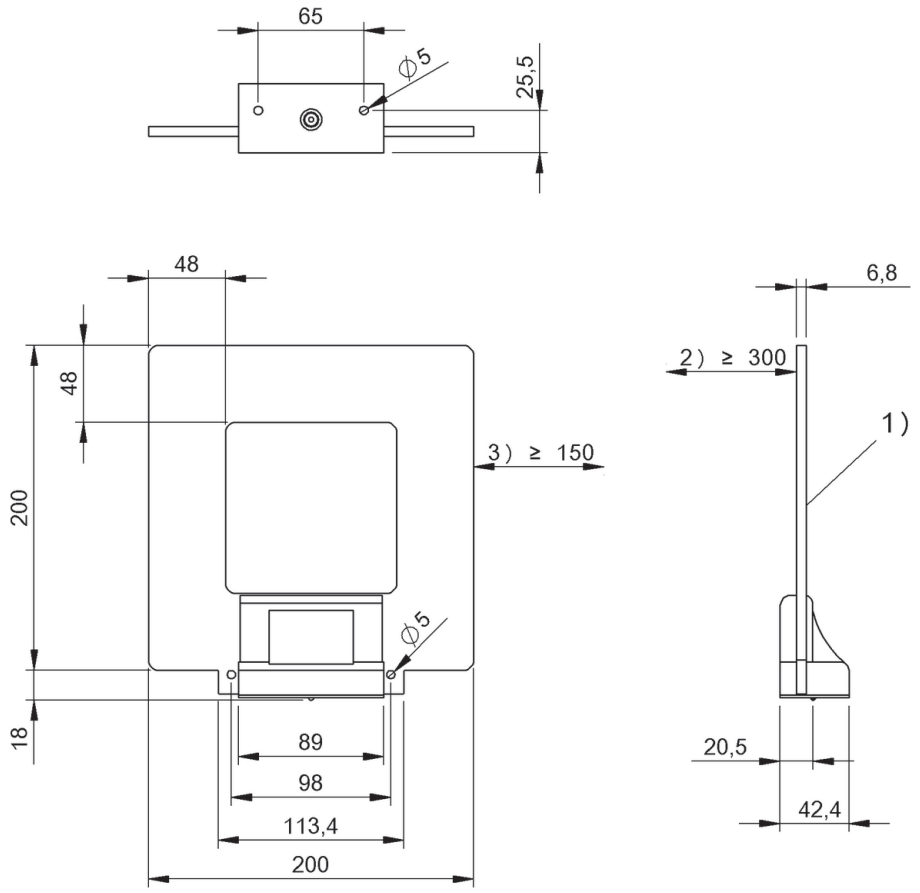

1) Sensing surface, 2) Clear zone, 3) Clear zone surrounding

Do you need more details? Our Product Finder at www.balluff.com provides you with product-specific information, including technical drawings, data sheets, user guides and more for each individual product. All items are available for download.

For processor units BIS M-62... For processor units BIS V-6... with BIS014N	**BIS00WK** BIS M-373-000-A01
Product Group	HF (13.56 MHz)
Dimension	300 x 42.4 x 318 mm
Installation	metal-free (clear zone)
Antenna type	round
Supported data carrier types	DIN ISO 14443, DIN ISO 15693
Connection	Connector, RCA
Housing material	PA
Ambient temperature	-20...50 °C
Protection degree	IP65
Approval/Conformity	CE

Appropriate data carrier

	BIS00YF	BIS00YE	BIS00Y5	BIS00Y4	BIS00W9
Working distance for writing	0-195	0-185	0-320	0-355	0-360
Working distance for reading	0-195	0-185	0-320	0-355	0-360

Dimensions in mm

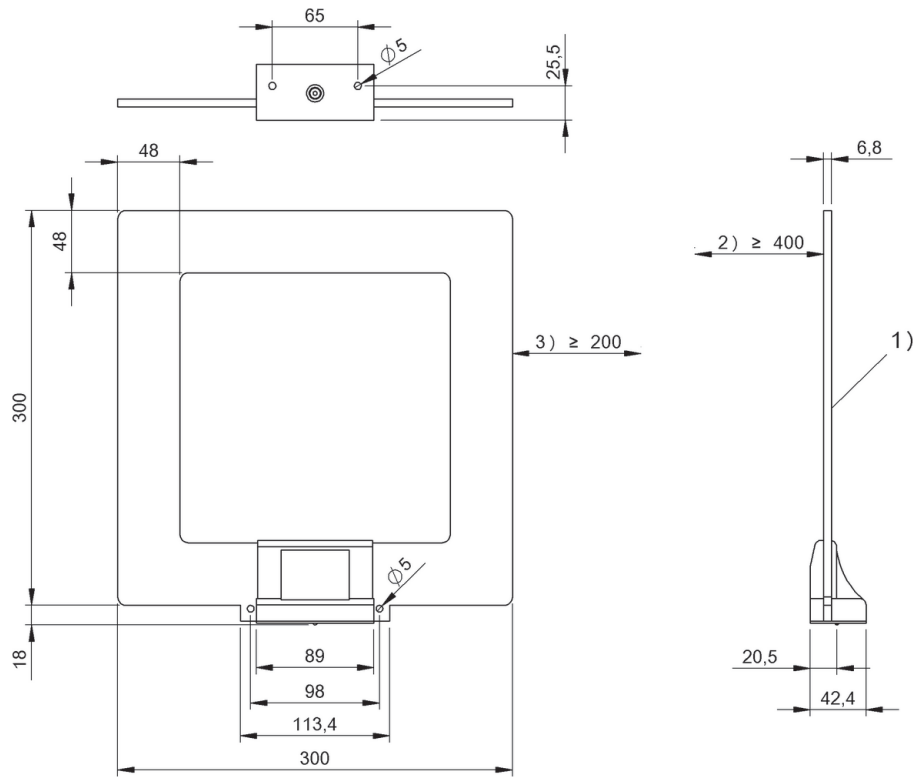

1) Sensing surface, 2) Clear zone, 3) Clear zone surrounding

For processor units BIS M-62... For processor units BIS V-6... with BIS014N	**BIS00WN** BIS M-370-000-A02
Product Group	HF (13.56 MHz)
Dimension	500 x 27 x 76 mm
Installation	metal-free (clear zone)
Antenna type	round
Supported data carrier types	DIN ISO 14443, DIN ISO 15693
Connection	Connector, RCA
Housing material	PA
Ambient temperature	-20...50 °C
Protection degree	IP65
Approval/Conformity	CE

Appropriate data carrier

	BIS00Y7	BIS00Y6	BIS00Y5	BIS00Y4	BIS00Y2	BIS00Y1
Working distance for writing	0-48	10-95	0-135	0-130	15-95	0-100
Working distance for reading	0-48	10-95	0-135	0-130	15-95	0-100

Dimensions in mm

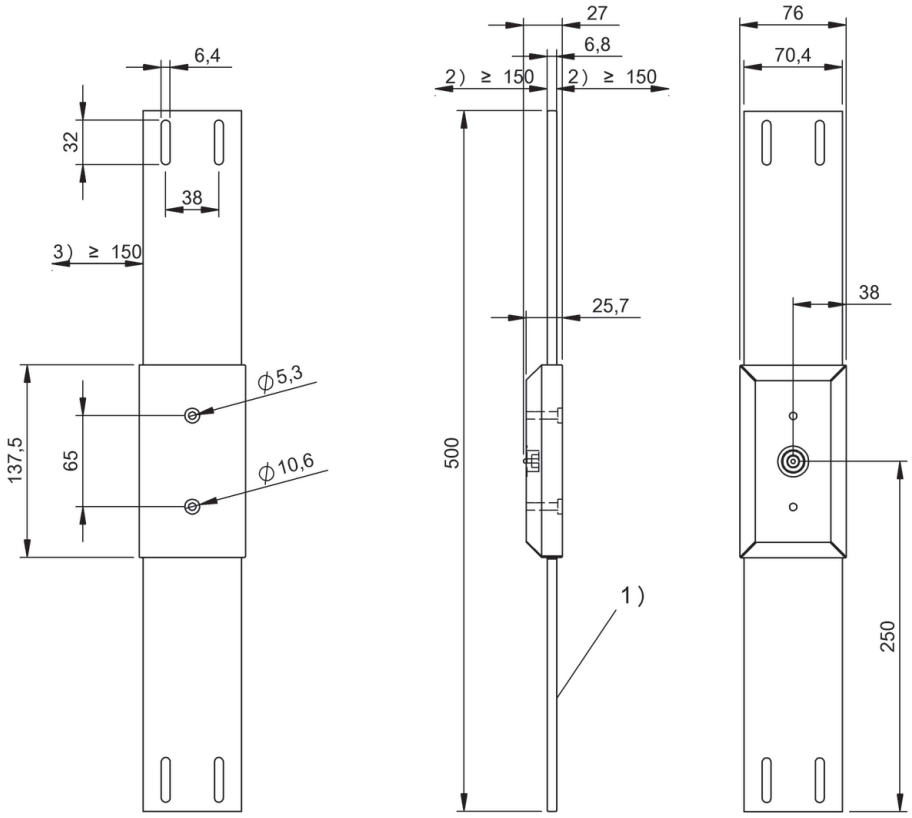

1) Sensing surface, 2) Clear zone, 3) Clear zone surrounding

For antennas BIS M-37...	**BIS014N** BIS VM-920
Product Group	HF (13.56 MHz)
Dimension	112 x 48 x 97 mm
Connection	Male, 4-pin
Housing material	Aluminum
Ambient temperature	-20...50 °C
Protection degree	IP65
Approval/Conformity	CE

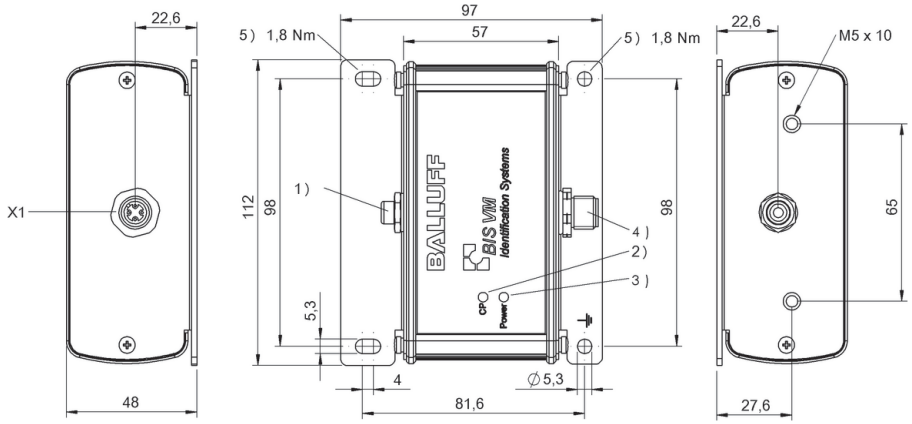

1) Antenna connection, 2) LED (CP), 3) LED (Power), 4) Read head connection X1, 5) Tightening torque

For read/write heads BIS VM (HF 13.56 MHz), BIS VL (LF 125 kHz) and BIS VU (UHF 860...960 MHz)	**BIS013U** BIS V-6108-048-C002	
Product Group	Multi-Frequency Processor	
Interface	Profinet I/O (IRT), Profinet I/O (IRT) 2-port switch	
IO-Link-Master-Port	max. 500 mA	
Supported RFID technologies	LF 125 kHz (BIS VL), HF 13.56 MHz (BIS VM), UHF 860...960 MHz (BIS VU)	
Number of connectable R/W heads / antennas	4	
Operating voltage Ub	24 V DC LPS Class 2	
Housing material	Zinc, Die casting	
Ambient temperature	0...60 °C	
IP rating	IP65, with connector	
Approval/Conformity	CE, EAC, cULus, WEEE	
Connection	2x M12x1-Female, 4-pin, D-coded 7/8“-Male, 5-pin	
Productview	Page 211	

* Use adapter **BIS0FCK** to connect read/write heads **BIS C (LF 70/455 kHz).**

	BIS01AE BIS V-6108-048-C007	BIS013W * BIS V-6108-048-C102	BIS01AF * BIS V-6108-048-C107
	Multi-Frequency Processor	Multi-Frequency Processor	Multi-Frequency Processor
	Profinet I/O (IRT), Profinet I/O (IRT) 2-port switch	Profinet I/O (IRT), Profinet I/O (IRT) 2-port switch	Profinet I/O (IRT), Profinet I/O (IRT) 2-port switch
	max. 500 mA	max. 500 mA	max. 500 mA
	LF 125 kHz (BIS VL), HF 13.56 MHz (BIS VM), UHF 860...960 MHz (BIS VU)	LF 125 kHz (BIS VL), LF 70/455 kHz (BIS C), HF 13.56 MHz (BIS VM), UHF 860...960 MHz (BIS VU)	LF 125 kHz (BIS VL), LF 70/455 kHz (BIS C), HF 13.56 MHz (BIS VM), UHF 860...960 MHz (BIS VU)
	4	4	4
	24 V DC LPS Class 2	24 V DC LPS Class 2	24 V DC LPS Class 2
	Zinc, Die casting	Zinc, Die casting	Zinc, Die casting
	0...60 °C	0...60 °C	0...60 °C
	IP65, with connector	IP65, with connector	IP65, with connector
	CE, EAC, cULus, WEEE	CE, EAC, cULus, WEEE	CE, EAC, cULus, WEEE
	2x M12x1-Female, 4-pin, D-coded M12x1-Male, 5-pin	2x M12x1-Female, 4-pin, D-coded 7/8“-Male, 5-pin	2x M12x1-Female, 4-pin, D-coded M12x1-Male, 5-pin
	Page 211	Page 211	Page 211

For read/write heads BIS VM (HF 13.56 MHz), BIS VL (LF 125 kHz) and BIS VU (UHF 860...960 MHz)	**BIS00T3** BIS V-6102-019-C001	
Product Group	Multi-Frequency Processor	
Interface	Profibus DP Slave galvanically isolated	
IO-Link-Master-Port	max. 500 mA	
Supported RFID technologies	LF 125 kHz (BIS VL), HF 13.56 MHz (BIS VM), UHF 860...960 MHz (BIS VU)	
Number of connectable R/W heads / antennas	4	
Operating voltage Ub	24 V DC LPS Class 2	
Housing material	Zinc, Die casting	
Ambient temperature	0...60 °C	
IP rating	IP65, with connector	
Approval/Conformity	CE, EAC, cULus, WEEE	
Connection	M12x1-Male, 5-pin, B-coded M12x1-Female, 5-pin, B-coded 7/8“-Male, 5-pin	
Productview	Page 212	

* Use adapter **BIS0FCK** to connect read/write heads **BIS C (LF 70/455 kHz).**

	BIS012E * BIS V-6102-019-C101	BIS01AA BIS V-6107-039-C007	BIS01AC * BIS V-6107-039-C107
	Multi-Frequency Processor	Multi-Frequency Processor	Multi-Frequency Processor
	Profibus DP Slave galvanically isolated	TCP/IP, USB	TCP/IP, USB
	max. 500 mA	max. 1.700 mA	max. 1.700 mA
	LF 125 kHz (BIS VL), LF 70/455 kHz (BIS C), HF 13.56 MHz (BIS VM), UHF 860...960 MHz (BIS VU)	LF 125 kHz (BIS VL), HF 13.56 MHz (BIS VM), UHF 860...960 MHz (BIS VU)	LF 125 kHz (BIS VL), LF 70/455 kHz (BIS C), HF 13.56 MHz (BIS VM), UHF 860...960 MHz (BIS VU)
	4	4	4
	24 V DC LPS Class 2	24 V DC LPS Class 2	24 V DC LPS Class 2
	Zinc, Die casting	Zinc, Die casting	Zinc, Die casting
	0...60 °C	0...60 °C	0...60 °C
	IP65, with connector	IP65, with connector	IP65, with connector
	CE, EAC, cULus, WEEE	CE, EAC, cULus, WEEE	CE, EAC, cULus, WEEE
	M12x1-Male, 5-pin, B-coded M12x1-Female, 5-pin, B-coded 7/8“-Male, 5-pin	M12x1-Female, 4-pin, D-coded M12x1-Female, 5-pin, A-coded M12x1-Male, 5-pin	M12x1-Female, 4-pin, D-coded M12x1-Female, 5-pin, A-coded M12x1-Male, 5-pin
	Page 212	Page 210	Page 210

For read/write heads BIS VM (HF 13.56 MHz), BIS VL (LF 125 kHz) and BIS VU (UHF 860...960 MHz)	**BIS0186** BIS V-6107-039-C005	
Product Group	Multi-Frequency Processor	
Interface	Ethernet TCP/IP, USB	
IO-Link-Master-Port	max. 1.700 mA	
Supported RFID technologies	LF 125 kHz (BIS VL), HF 13.56 MHz (BIS VM), UHF 860...960 MHz (BIS VU)	
Number of connectable R/W heads / antennas	4	
Operating voltage Ub	24 V DC LPS Class 2	
Housing material	Zinc, Die casting	
Ambient temperature	0...60 °C	
IP rating	IP65, with connector	
Approval/Conformity	CE, EAC, cULus, WEEE	
Connection	M12x1-Female, 4-pin, D-coded M12x1-Female, 5-pin, A-coded 7/8“-Male, 5-pin	
Productview	Page 212	

* Use adapter **BIS0FCK** to connect read/write heads **BIS C (LF 70/455 kHz).**

	BIS018J BIS V-6107-039-C006	BIS0187 * BIS V-6107-039-C105	BIS018K * BIS V-6107-039-C106
	Multi-Frequency Processor	Multi-Frequency Processor	Multi-Frequency Processor
	Ethernet TCP/IP, USB	Ethernet TCP/IP, USB	Ethernet TCP/IP, USB
	max. 1.700 mA	max. 1.700 mA	max. 1.700 mA
	LF 125 kHz (BIS VL), HF 13.56 MHz (BIS VM), UHF 860...960 MHz (BIS VU)	LF 125 kHz (BIS VL), LF 70/455 kHz (BIS C), HF 13.56 MHz (BIS VM), UHF 860...960 MHz (BIS VU)	LF 125 kHz (BIS VL), LF 70/455 kHz (BIS C), HF 13.56 MHz (BIS VM), UHF 860...960 MHz (BIS VU)
	4	4	4
	24 V DC LPS Class 2	24 V DC LPS Class 2	24 V DC LPS Class 2
	Zinc, Die casting	Zinc, Die casting	Zinc, Die casting
	0...60 °C	0...60 °C	0...60 °C
	IP65, with connector	IP65, with connector	IP65, with connector
	CE, EAC, cULus, WEEE	CE, EAC, cULus, WEEE	CE, EAC, cULus, WEEE
	M12x1-Female, 4-pin, D-coded M12x1-Female, 5-pin, A-coded 7/8“-Male, 4-pin	M12x1-Female, 4-pin, D-coded M12x1-Female, 5-pin, A-coded 7/8“-Male, 5-pin	M12x1-Female, 4-pin, D-coded M12x1-Female, 5-pin, A-coded 7/8“-Male, 4-pin
	Page 213	Page 212	Page 213

For read/write heads BIS VM (HF 13.56 MHz), BIS VL (LF 125 kHz) and BIS VU (UHF 860...960 MHz)	**BIS012F** BIS V-6106-034-C002	
Product Group	Multi-Frequency Processor	
Interface	Ethernet/IP	
IO-Link-Master-Port	max. 500 mA	
Supported RFID technologies	LF 125 kHz (BIS VL), HF 13.56 MHz (BIS VM), UHF 860...960 MHz (BIS VU)	
Number of connectable R/W heads / antennas	4	
Operating voltage Ub	24 V DC LPS Class 2	
Housing material	Zinc, Die casting	
Ambient temperature	0...60 °C	
IP rating	IP65, with connector	
Approval/Conformity	CE, EAC, cULus, WEEE	
Connection	2x M12x1-Female, 4-pin, D-coded 7/8“-Male, 5-pin	
Productview	Page 213	

* Use adapter **BIS0FCK** to connect read/write heads **BIS C (LF 70/455 kHz).**

	BIS0122 BIS V-6106-034-C004	BIS014C * BIS V-6106-034-C102	BIS0146 BIS V-6106-034-C104
	Multi-Frequency Processor	Multi-Frequency Processor	Multi-Frequency Processor
	Ethernet/IP	Ethernet/IP	Ethernet/IP
	max. 500 mA	max. 500 mA	max. 500 mA
	LF 125 kHz (BIS VL), HF 13.56 MHz (BIS VM), UHF 860...960 MHz (BIS VU)	LF 125 kHz (BIS VL), LF 70/455 kHz (BIS C), HF 13.56 MHz (BIS VM), UHF 860...960 MHz (BIS VU)	LF 125 kHz (BIS VL), LF 70/455 kHz (BIS C), HF 13.56 MHz (BIS VM), UHF 860...960 MHz (BIS VU)
	4	4	4
	24 V DC LPS Class 2	24 V DC LPS Class 2	24 V DC LPS Class 2
	Zinc, Die casting	Zinc, Die casting	Zinc, Die casting
	0...60 °C	0...60 °C	0...60 °C
	IP65, with connector	IP65, with connector	IP65, with connector
	CE, EAC, cULus, WEEE	CE, EAC, cULus, WEEE	CE, EAC, cULus, WEEE
	2x M12x1-Female, 4-pin, D-coded 7/8“-Male, 4-pin	2x M12x1-Female, 4-pin, D-coded 7/8“-Male, 5-pin	2x M12x1-Female, 4-pin, D-coded 7/8“-Male, 4-pin
	Page 214	Page 213	Page 214

Do you need more details? Our Product Finder at www.balluff.com provides you with product-specific information, including technical drawings, data sheets, user guides and more for each individual product. All items are available for download.

For read/write heads BIS VM (HF 13.56 MHz), BIS VL (LF 125 kHz) and BIS VU (UHF 860...960 MHz)	**BIS00U9** BIS V-6110-063-C002	
Product Group	Multi-Frequency Processor	
Interface	EtherCAT	
IO-Link-Master-Port	max. 500 mA	
Supported RFID technologies	LF 125 kHz (BIS VL), HF 13.56 MHz (BIS VM), UHF 860...960 MHz (BIS VU)	
Number of connectable R/W heads / antennas	4	
Operating voltage Ub	24 V DC LPS Class 2	
Housing material	Zinc, Die casting	
Ambient temperature	0...60 °C	
IP rating	IP65, with connector	
Approval/Conformity	CE, EAC, cULus, WEEE	
Connection	2x M12x1-Female, 4-pin, D-coded 7/8“-Male, 5-pin	
Productview	Page 214	

* Use adapter **BIS0FCK** to connect read/write heads **BIS C (LF 70/455 kHz).**

	BIS0147 BIS V-6110-063-C102	BIS010P BIS V-6111-073-C003	BIS014E * BIS V-6111-073-C103
	Multi-Frequency Processor	Multi-Frequency Processor	Multi-Frequency Processor
	EtherCAT	CC-Link	CC-Link
	max. 500 mA	max. 500 mA	max. 500 mA
	LF 125 kHz (BIS VL), LF 70/455 kHz (BIS C), HF 13.56 MHz (BIS VM), UHF 860...960 MHz (BIS VU)	LF 125 kHz (BIS VL), HF 13.56 MHz (BIS VM)	LF 125 kHz (BIS VL), LF 70/455 kHz (BIS C), HF 13.56 MHz (BIS VM)
	4	4	4
	24 V DC LPS Class 2	24 V DC LPS Class 2	24 V DC LPS Class 2
	Zinc, Die casting	Zinc, Die casting	Zinc, Die casting
	0...60 °C	0...60 °C	0...60 °C
	IP65, with connector	IP65, with connector	IP65, with connector
	CE, EAC, cULus, WEEE	CE, EAC, cULus, WEEE	CE, EAC, cULus, WEEE
	2x M12x1-Female, 4-pin, D-coded 7/8“-Male, 5-pin	M12x1-Male, 5-pin, A-coded M12x1-Female, 5-pin, A-coded 7/8“-Male, 5-pin	M12x1-Male, 5-pin, A-coded M12x1-Female, 5-pin, A-coded 7/8“-Male, 5-pin
	Page 214	Page 215	Page 215

Do you need more details? Our Product Finder at www.balluff.com provides you with product-specific information, including technical drawings, data sheets, user guides and more for each individual product. All items are available for download.

For read/write heads BIS M-3xx-001...	**BIS00N1** BIS M-6000-007-050-00-ST15	
Product Group	HF (13.56 MHz)	
Interface	RS232	
Supported RFID technologies	HF 13.56 MHz (BIS M)	
Number of connectable R/W heads / antennas	2	
Operating voltage Ub	19.2...28.8 VDC	
Housing material	ABS	
Ambient temperature	0...60 °C	
Protection degree	IP65 with connector	
Approval/Conformity	CE, cULus	
Connection	Male, 4-pole Male, 5-pole	
Productview	Page 215	

	BIS00J0 BIS M-6000-007-050-00-ST24	BIS00L7 BIS M-6008-048-050-06-ST23	BIS00EW BIS M-6002-019-050-03-ST11
	HF (13.56 MHz)	HF (13.56 MHz)	HF (13.56 MHz)
	RS232	Profinet I/O (IRT), Profinet I/O (IRT) 2 port Switch	Profibus DP Slave galvanically isolated
	HF 13.56 MHz (BIS M)	HF 13.56 MHz (BIS M)	HF 13.56 MHz (BIS M)
	2	2	2
	19.2...28.8 VDC	19.2...28.8 VDC	19.2...28.8 VDC
	ABS	ABS	ABS
	0...60 °C	0...60 °C	0...60 °C
	IP65 with connector	IP65 with connector	IP65 with connector
	CE, UL-FILE E227256, Vol.X1, BIS	CE, UL-FILE E227256, Vol.X1, BIS	CE, UL-FILE E227256, Vol.X1, BIS
	Male, 5-pole, B-coded Male, 5-pole	Female, 4-pole, D-coded M12x1-Female, 4-pole, D-coded Male, 5-pole	Male, 5-pole, B-coded M12x1-Female, 5-pole, B-coded Male, 5-pole
	Page 216	Page 216	Page 217

For read/write heads BIS M-3xx-001...	**BIS00F0** BIS M-6022-019-050-03-ST14	
For read/write heads BIS M-3xx-003...		
Product Group	HF (13.56 MHz)	
Interface	Profibus DP Slave galvanically isolated	
Supported RFID technologies	HF 13.56 MHz (BIS M)	
Number of connectable R/W heads / antennas	2	
Operating voltage Ub	19.2...28.8 VDC	
Housing material	Aluminum, die-cast	
Ambient temperature	0...60 °C	
Protection degree	IP65 with connector	
Approval/Conformity	CE, UL-FILE E227256, Vol.X1, BIS	
Connection	Male, 5-pole, B-coded M12x1-Female, 5-pole, B-coded Male, 5-pole	
Productview	Page 217	

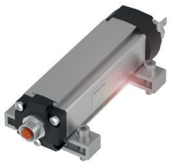

		BIS00F2 BIS M-6026-034-050-06-ST19	**BIS00LY** BIS M-699-052-050-03-ST11
	BIS00EP BIS M-407-039-003-06-S115		
	HF (13.56 MHz)	HF (13.56 MHz)	HF (13.56 MHz)
	Ethernet TCP/IP	Ethernet/IP	CC-Link
	HF 13.56 MHz (BIS M)	HF 13.56 MHz (BIS M)	HF 13.56 MHz (BIS M)
	1	2	2
	19.2...28.8 VDC	19.2...28.8 VDC	21.6...26.4 VDC Supports only LPS/Class 2
	Aluminum	Aluminum, die-cast	Aluminum, die-cast
	0...60 °C	0...60 °C	0...55 °C
	IP67 with connector	IP65 with connector	IP65 with connector
	CE, UL-FILE E227256, Vol.X1, BIS	CE, UL-FILE E227256, Vol.X1, BIS	CE, CLPA, UL-FILE E227256, Vol.X1, BIS
	Female, 4-pole, D-coded Male, 5-pole	Female, 4-pole, D-coded Male, 5-pole	Male, 5-pole Female, 5-pole Male, 5-pole
	Page 218	Page 218	Page 219

For read/write heads BIS M-37x-000...	**BIS00ZJ** BIS M-620-068-A01-00-S115	
Product Group	HF (13.56 MHz)	
Interface	RS232	
Supported RFID technologies	HF 13.56 MHz (BIS M)	
Number of connectable R/W heads / antennas	1	
Operating voltage Ub	19.2...28.8 VDC	
Housing material	Aluminum	
Ambient temperature	-20...50 °C	
Protection degree	IP65 with connector	
Approval/Conformity	CE, UL-FILE E227256, Vol.X1, BIS	
Connection	M12x1 connector, 8-pin	
Productview	Page 219	

	BIS00ZH BIS M-620-068-A01-00-ST29	BIS011P BIS M-628-075-A01-03-ST34	BIS00ZF BIS M-622-070-A01-03-ST33
	HF (13.56 MHz)	HF (13.56 MHz)	HF (13.56 MHz)
	RS232	Profinet galvanically isolated	Profibus DP Slave galvanically isolated
	HF 13.56 MHz (BIS M)	HF 13.56 MHz (BIS M)	HF 13.56 MHz (BIS M)
	1	1	1
	19.2...28.8 VDC	19.2...28.8 VDC	19.2...28.8 VDC
	Aluminum	Aluminum	Aluminum
	-20...50 °C	-20...50 °C	-20...50 °C
	IP65 with connector	IP65 with connector	IP65 with connector
	CE, UL-FILE E227256, Vol.X1, BIS	CE, UL-FILE E227256, Vol.X1, BIS	CE, UL-FILE E227256, Vol.X1, BIS
	M12x1 connector, 8-pin	2x M12x1-Female, 4-pole, D-coded M12x1-Male, 5-pole	M12x1-Male, 5-pole, B-coded M12x1-Female, 5-pole, B-coded M12x1-Male, 5-pole
	Page 220	Page 237	Page 220

For read/write heads BIS M-37x-000...	**BIS00ZC** BIS M-626-069-A01-06-ST31	
Product Group	HF (13.56 MHz)	
Interface	Industrial Ethernet/Ethernet TCP/IP/MODBUS TCP	
Supported RFID technologies	HF 13.56 MHz (BIS M)	
Number of connectable R/W heads / antennas	1	
Operating voltage Ub	19.2...28.8 VDC	
Housing material	Aluminum	
Ambient temperature	-20...50 °C	
Protection degree	IP65 with connector	
Approval/Conformity	CE, UL-FILE E227256, Vol.X1, BIS	
Connection	M12x1-Female, 4-pole, D-coded M12x1-Male, 5-pole	
Productview	Page 221	

	BIS00ZA BIS M-626-069-A01-06-ST32	BIS00ZE BIS M-623-071-A01-03-ST30	
	HF (13.56 MHz)	HF (13.56 MHz)	
	Industrial Ethernet/Ethernet TCP/IP/MODBUS TCP	DeviceNet galvanically isolated	
	HF 13.56 MHz (BIS M)	HF 13.56 MHz (BIS M)	
	1	1	
	19.2...28.8 VDC	19.2...28.8 VDC	
	Aluminum	Aluminum	
	-20...50 °C	-20...50 °C	
	IP65 with connector	IP65 with connector	
	CE, UL-FILE E227256, Vol.X1, BIS	CE, UL-FILE E227256, Vol.X1, BIS	
	M12x1-Female, 4-pole, D-coded M12x1-Male, 5-pole	M12x1-Male, 5-pole M12x1-Male, 8-pole	
	Page 222	Page 210	

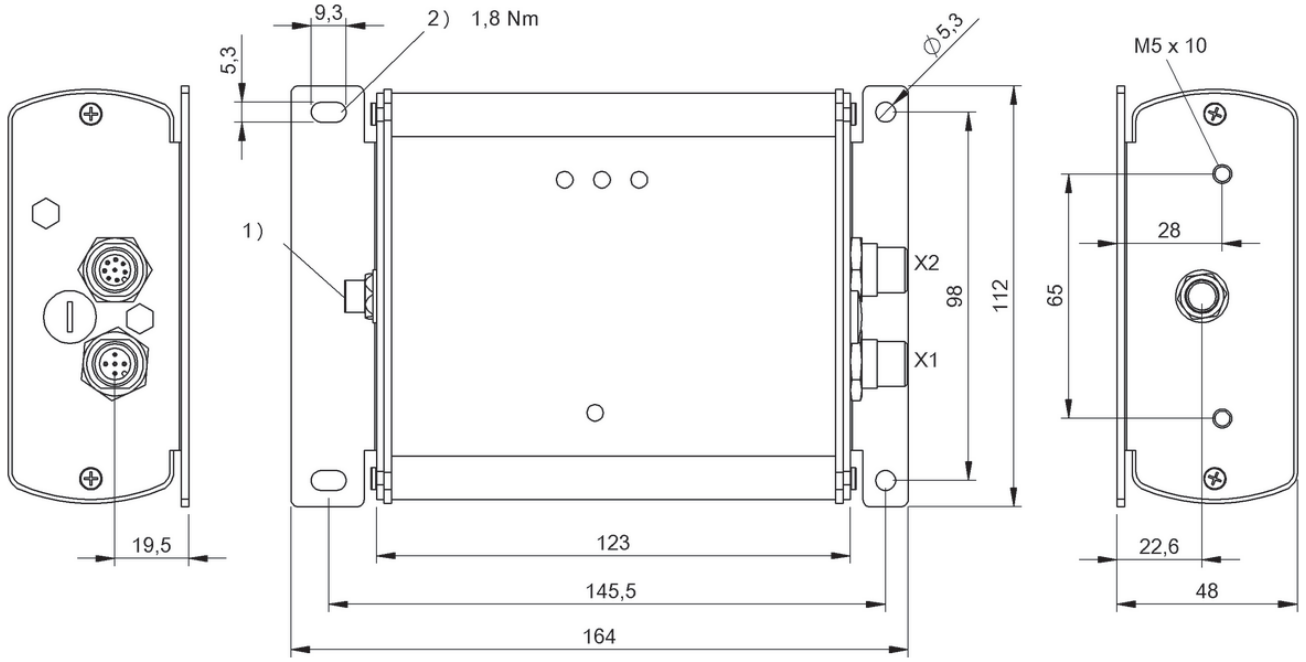

1) Antenna, 2) Tightening torque

BIS00ZE

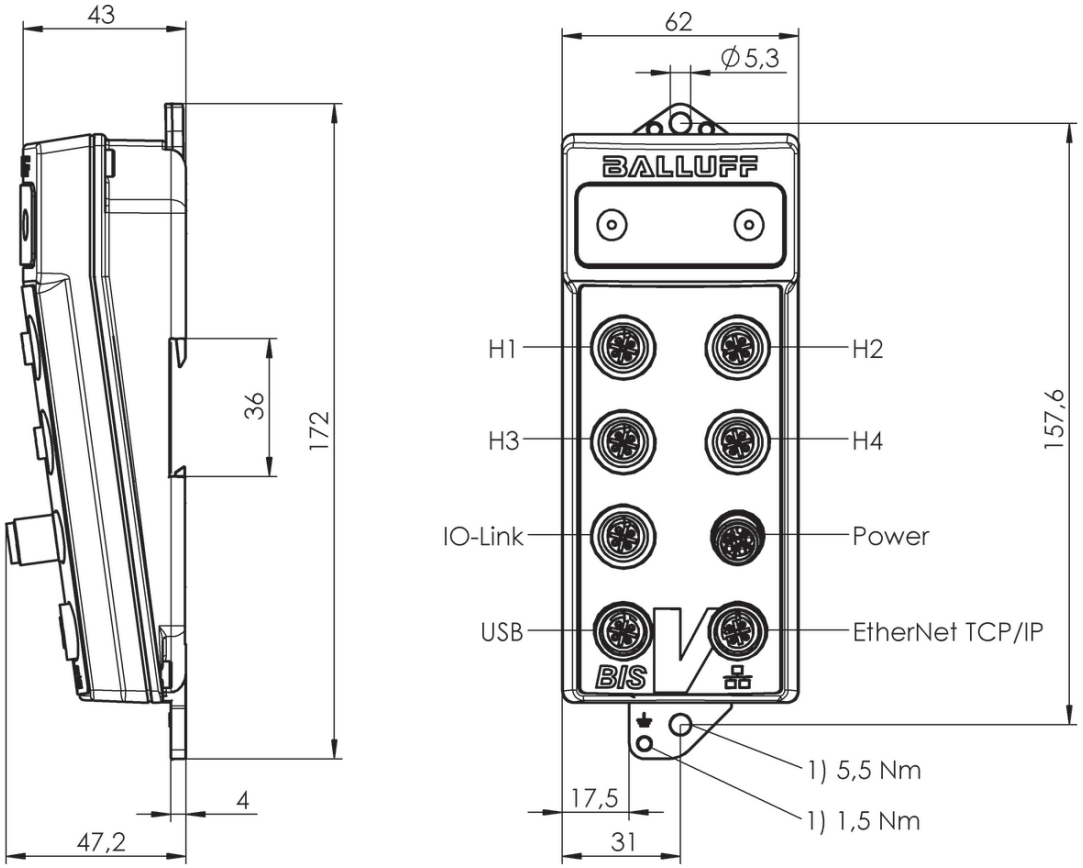

1) Tightening torque

BIS01AA, BIS01AC

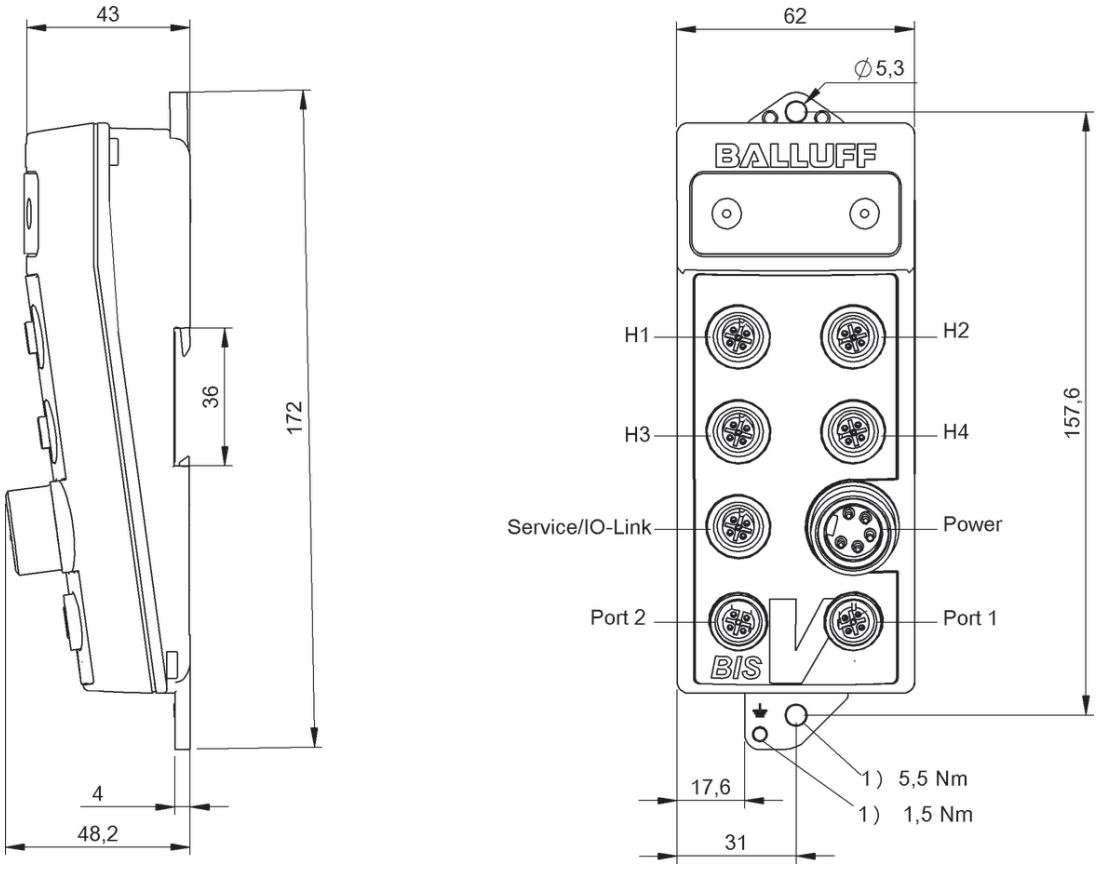

1) Tightening torque

BIS013U, BIS013W

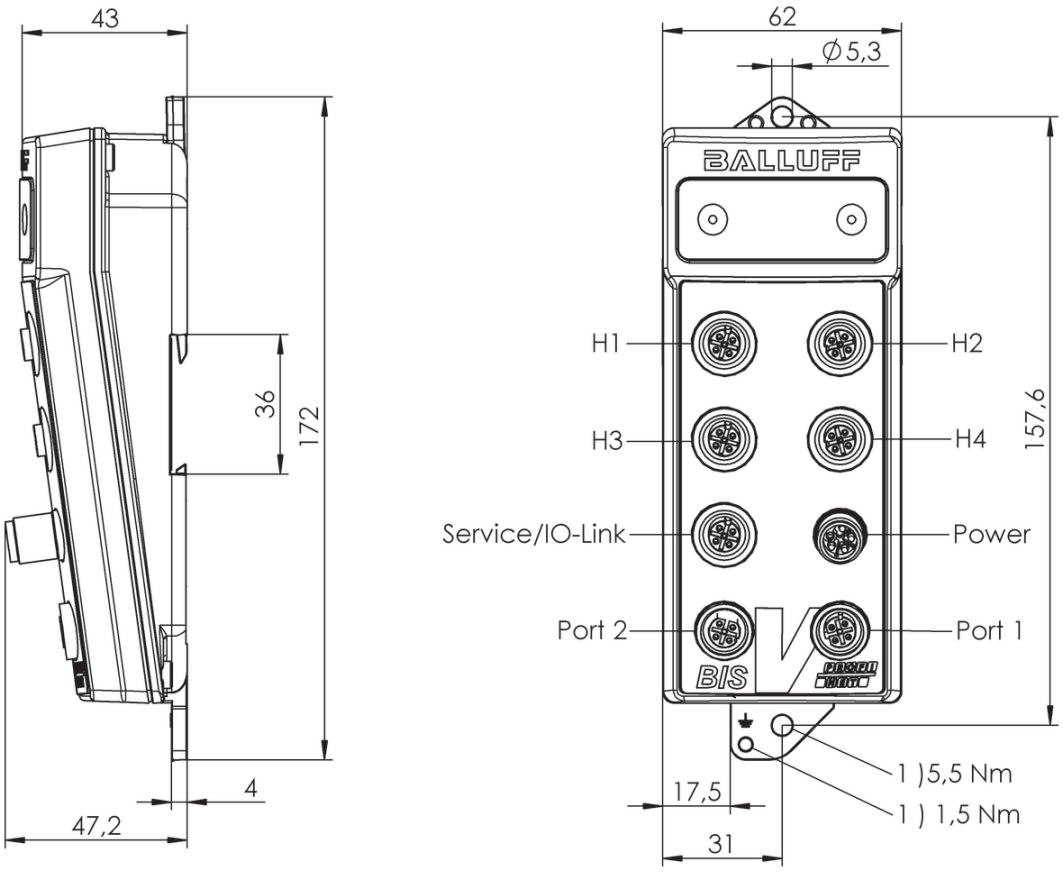

1) Tightening torque

BIS01AE, BIS01AF

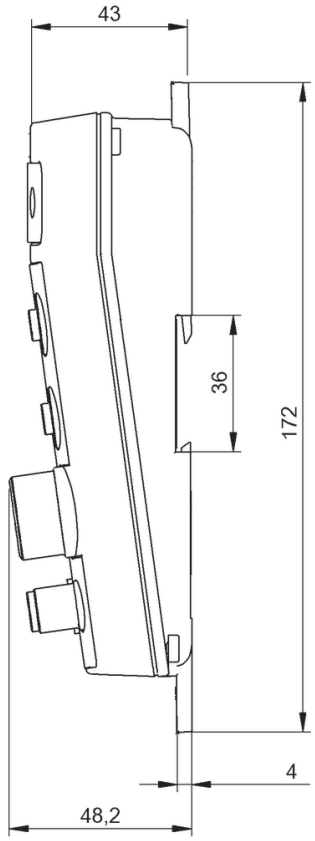

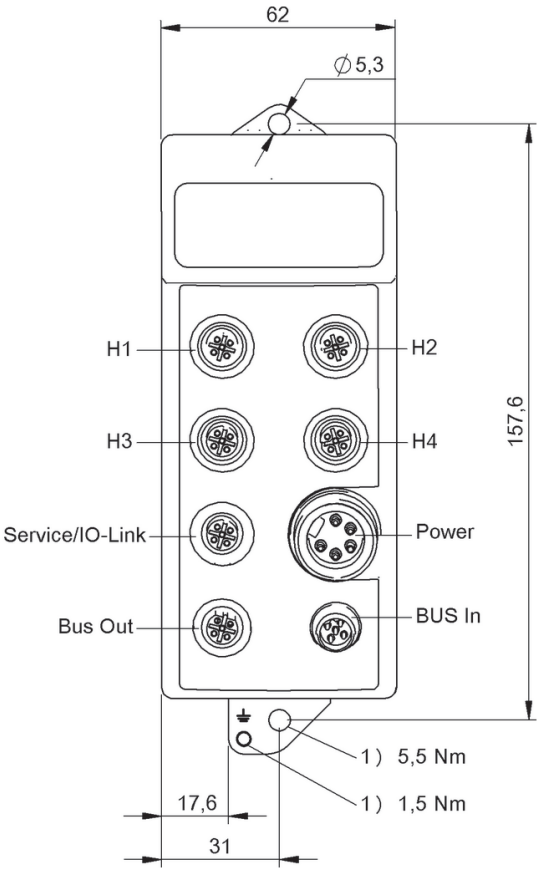

1) Tightening torque

BIS00T3, BIS012E

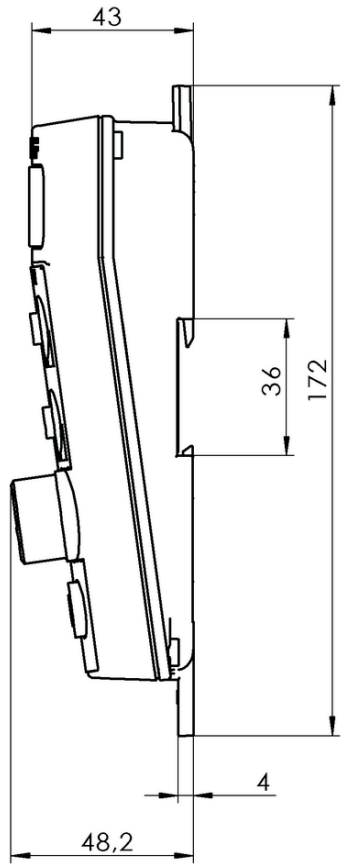

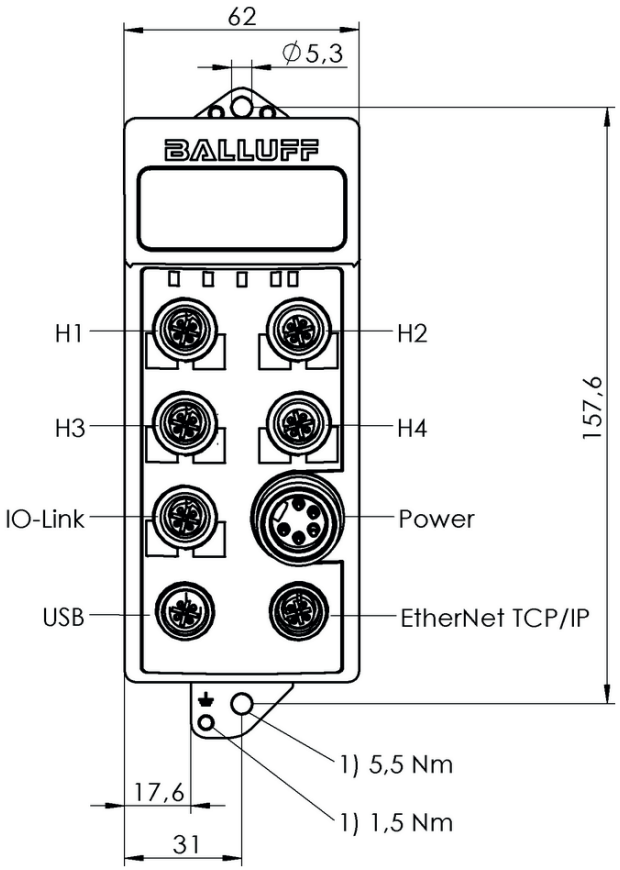

1) Tightening torque

BIS0186, BIS0187

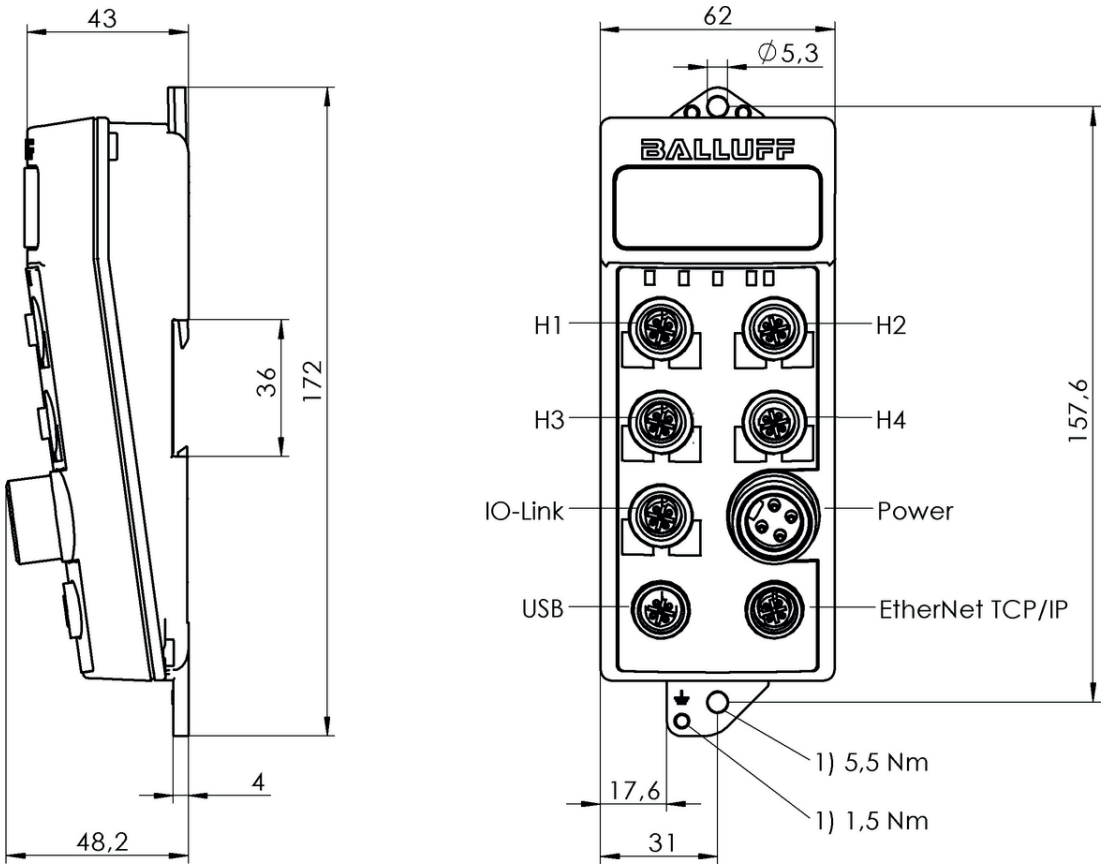

1) Tightening torque

BIS018J, BIS018K

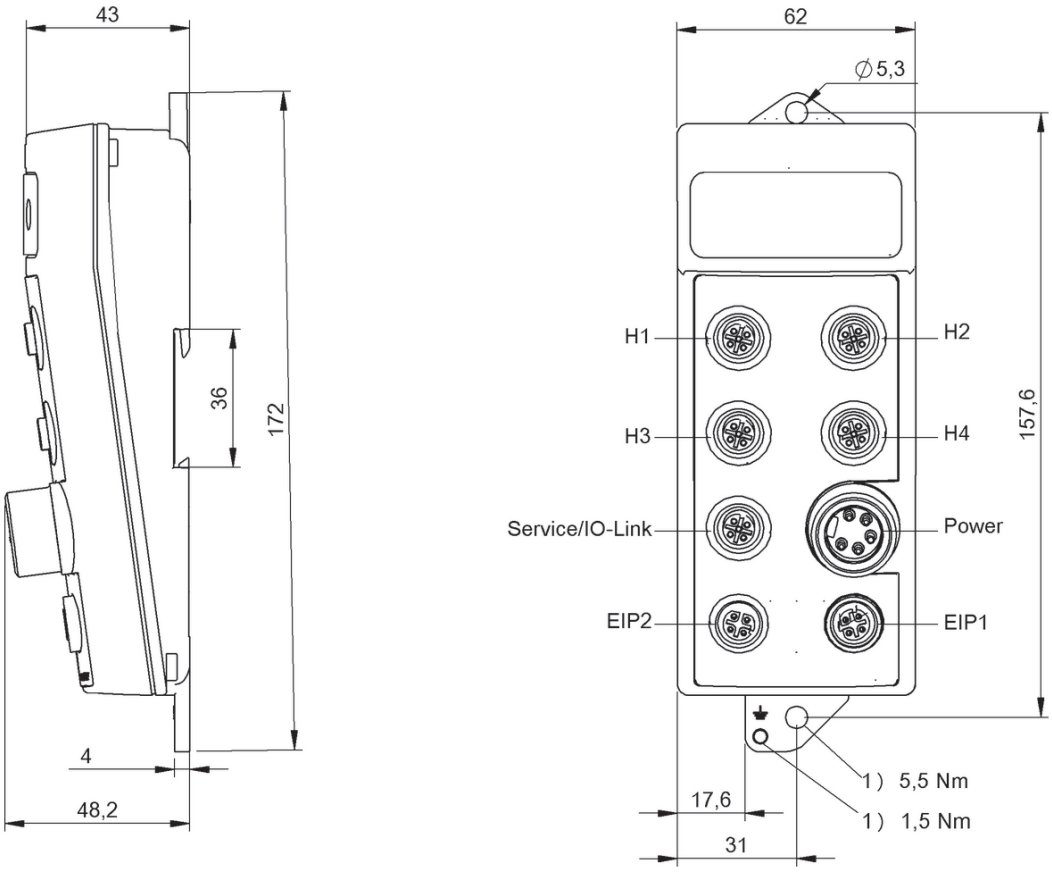

1) Tightening torque

BIS012F, BIS014C

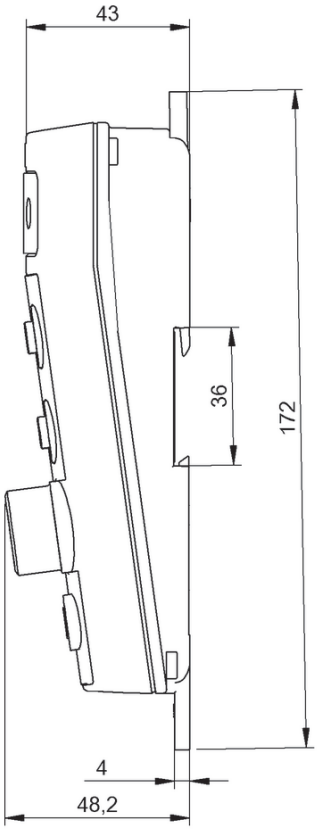

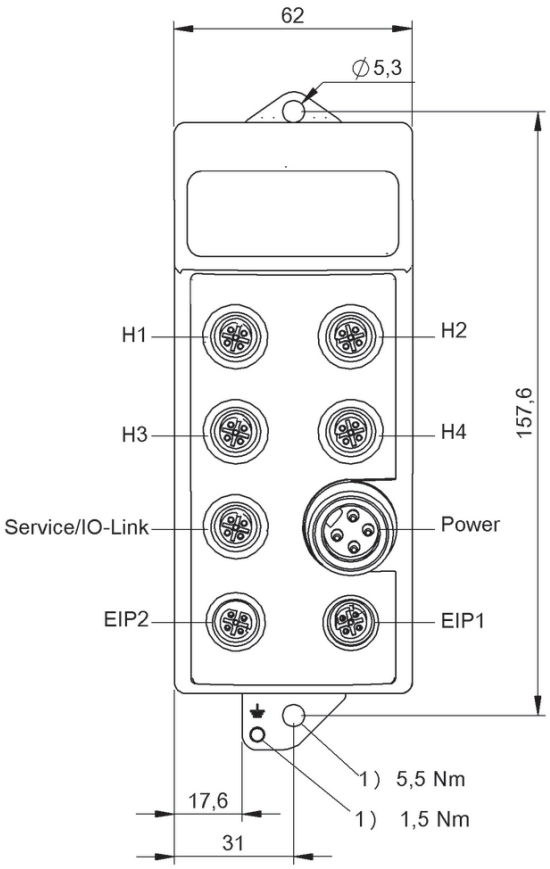

1) Tightening torque

BIS0122, BIS0146

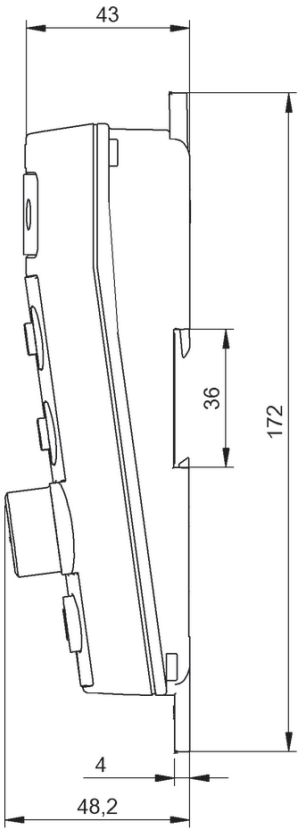

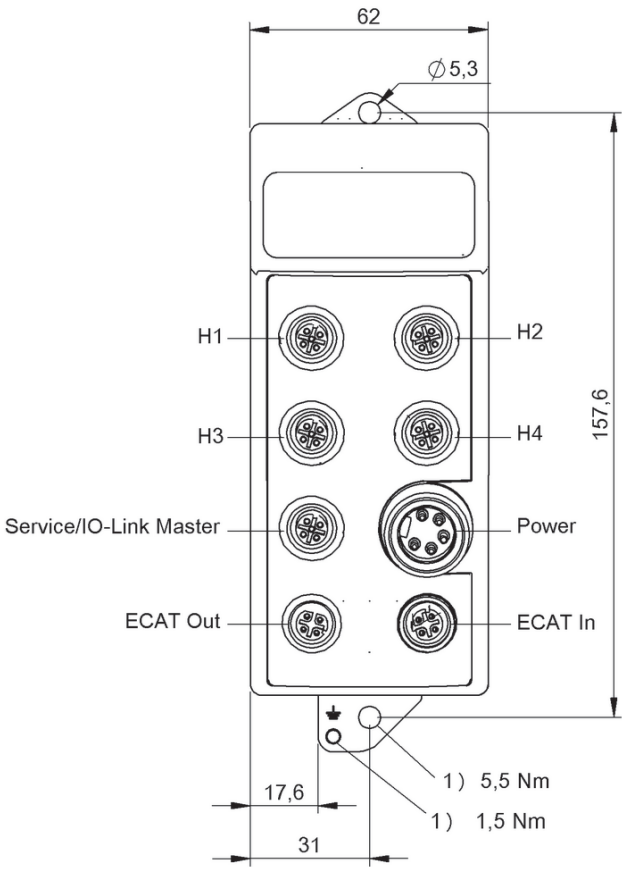

1) Tightening torque

BIS00U9, BIS0147

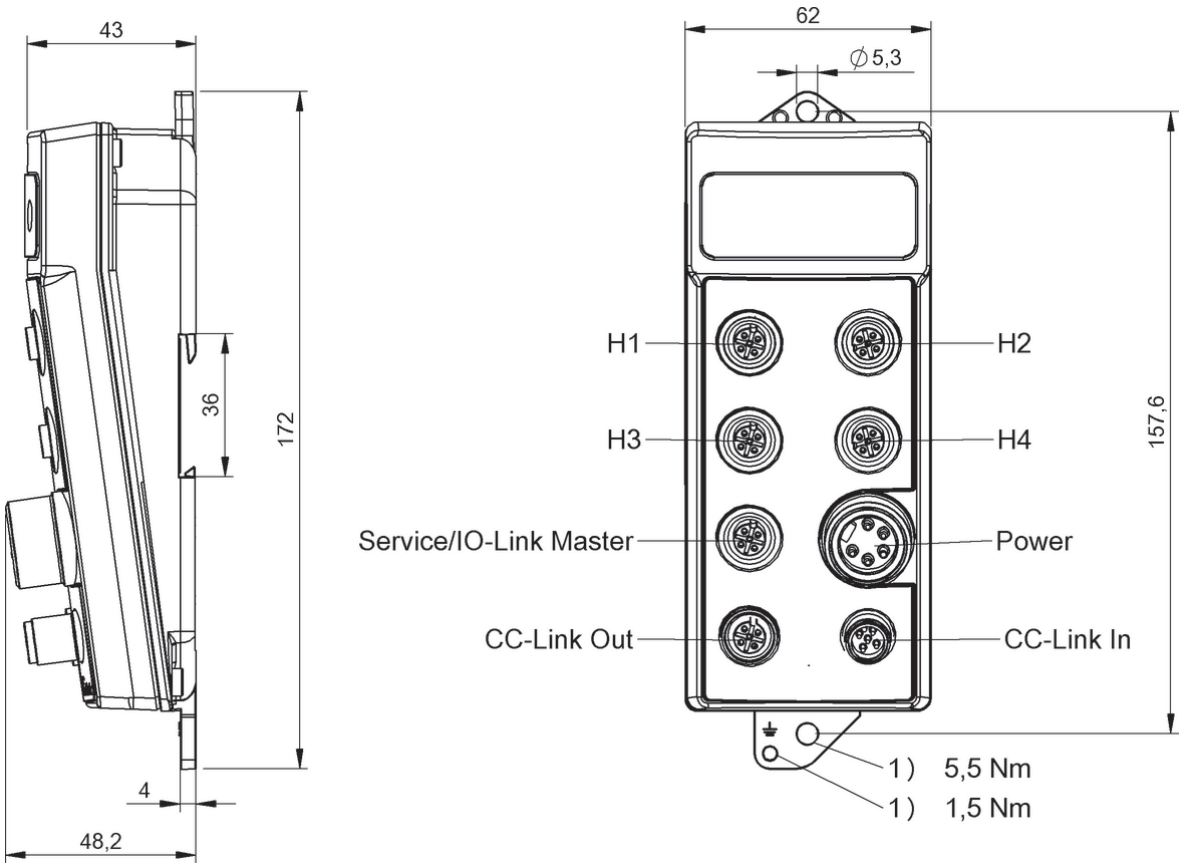

1) Tightening torque

BIS010P, BIS014E

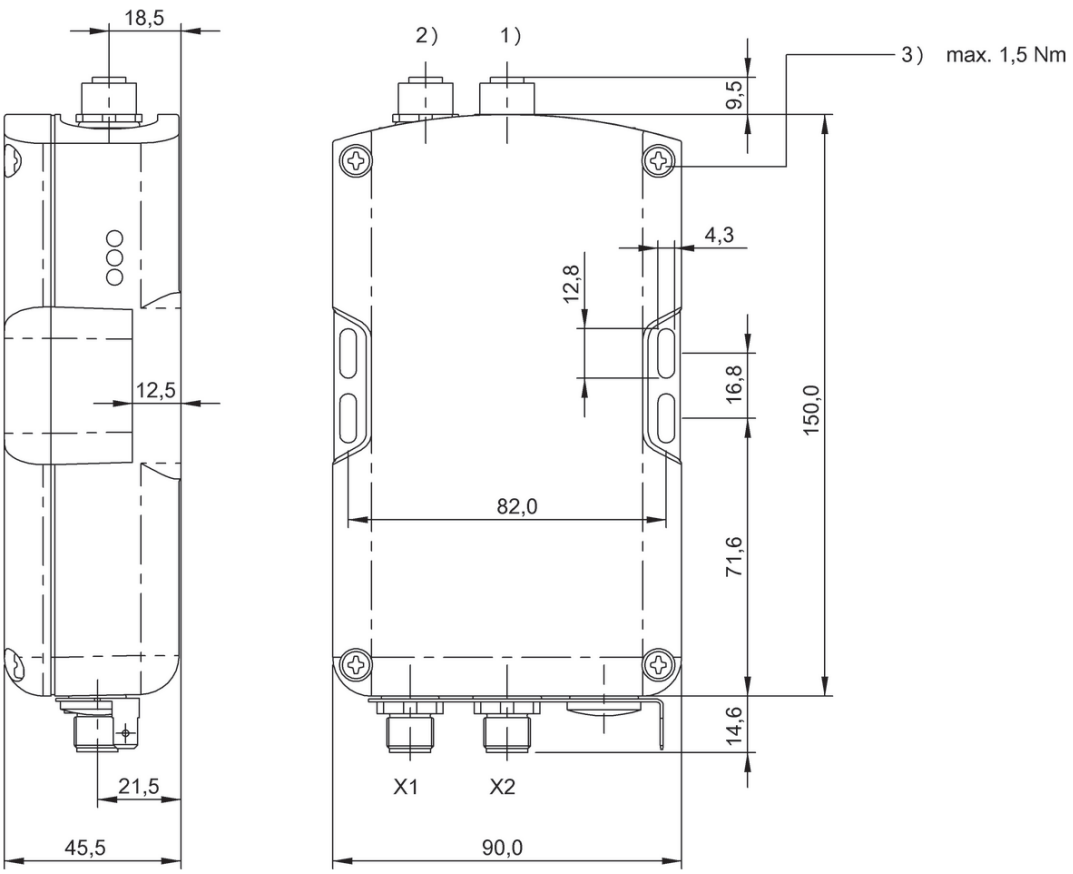

1) Head 1, 2) Head 2, 3) Tightening torque

BIS00N1

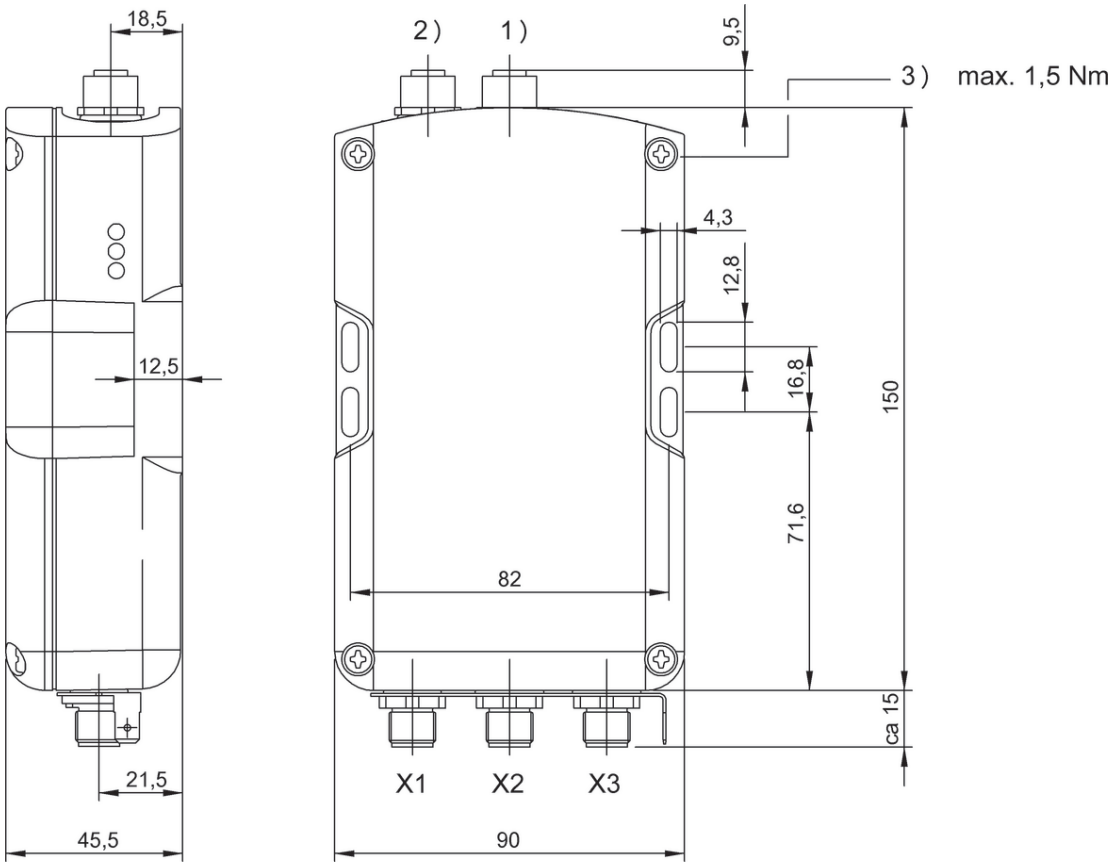

1) Head 1, 2) Head 2, 3) Tightening torque

BIS00J0

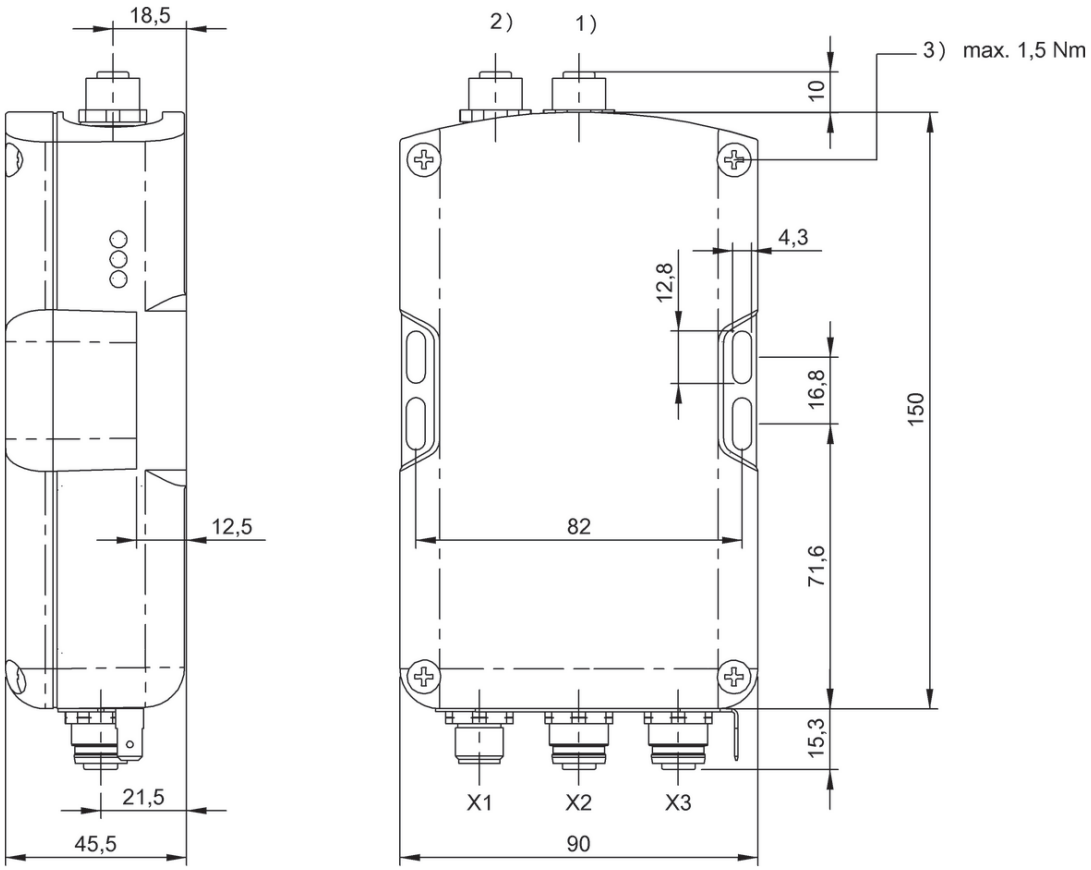

1) Head 1, 2) Head 2, 3) Tightening torque

BIS00L7

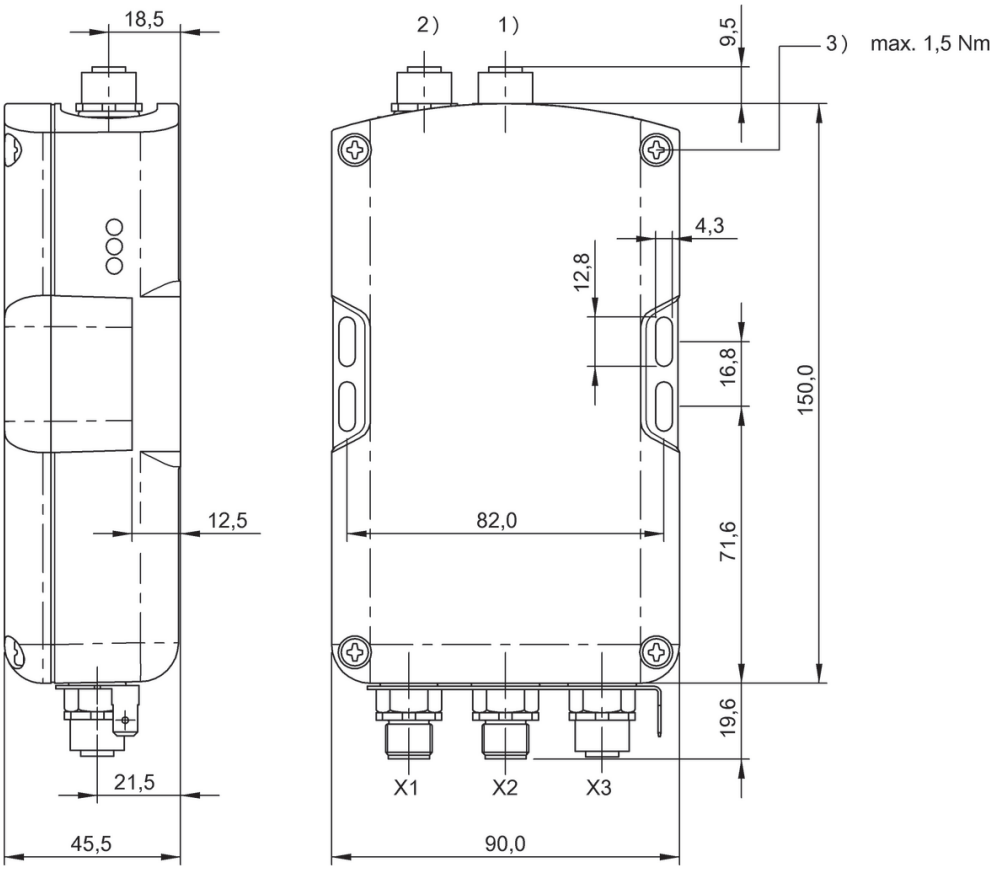

1) Head 1, 2) Head 2, 3) Tightening torque

BIS00EW

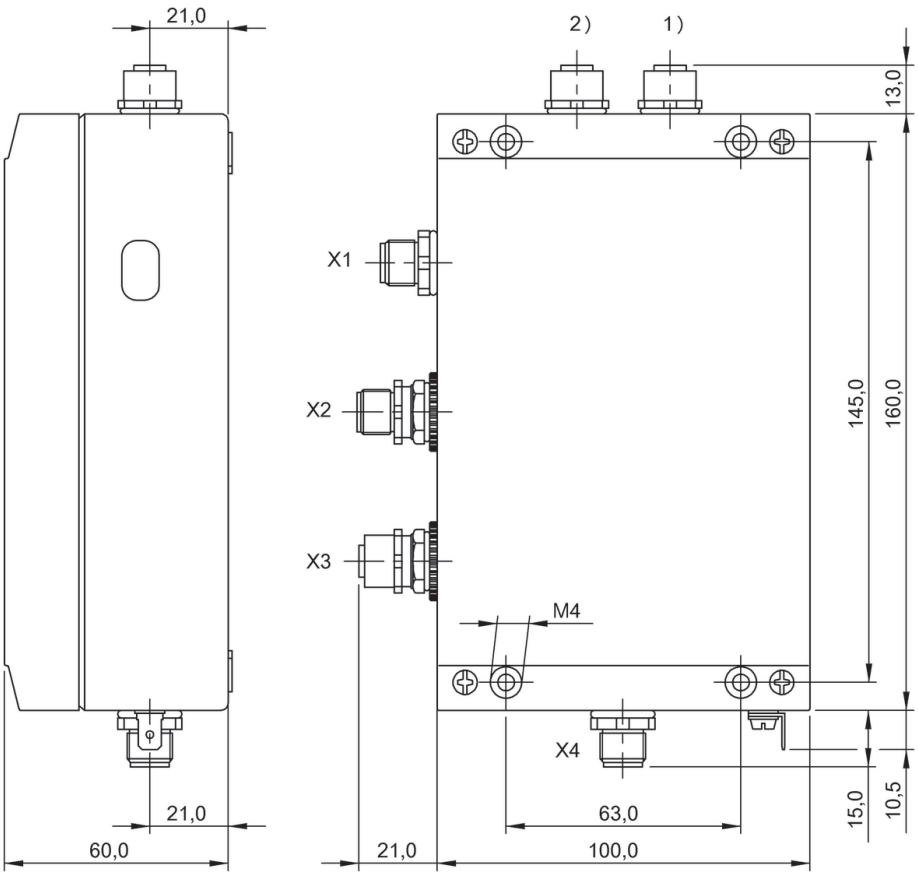

1) Head 1, 2) Head 2

BIS00F0

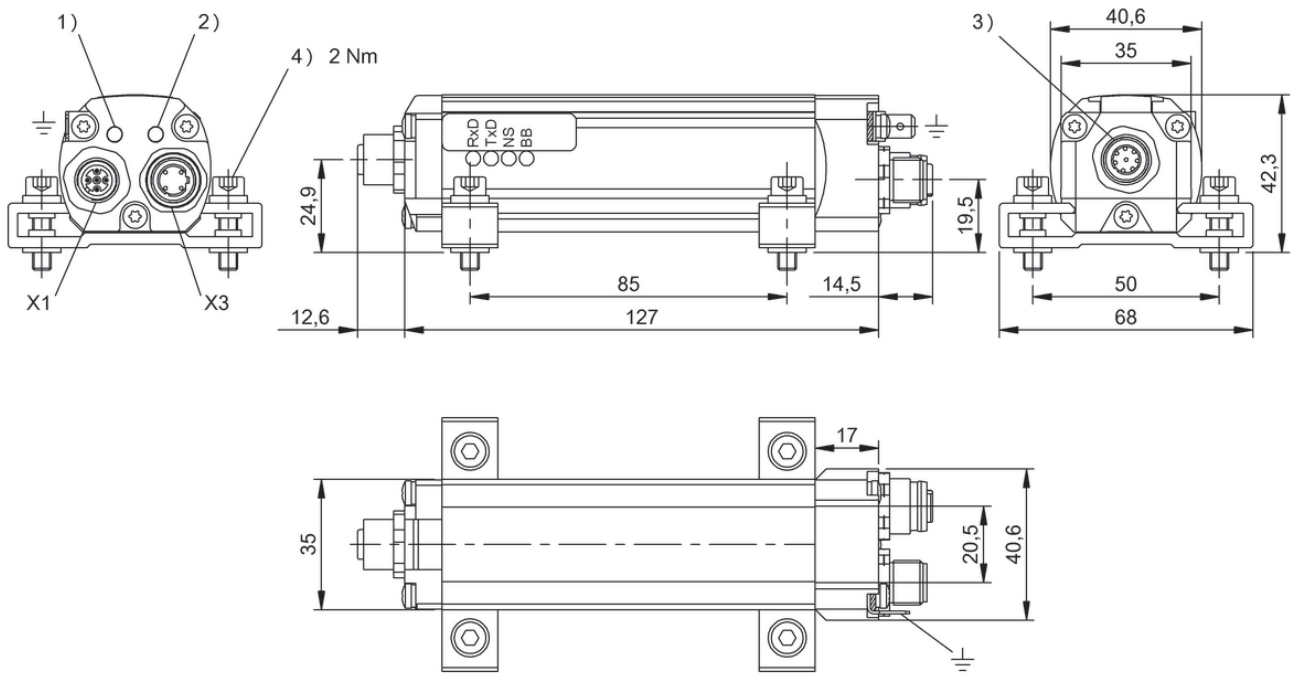

1) LED1 Ethernet Status, 2) LED2 Ethernet Status, 3) Head, 4) Tightening torque

BIS00EP

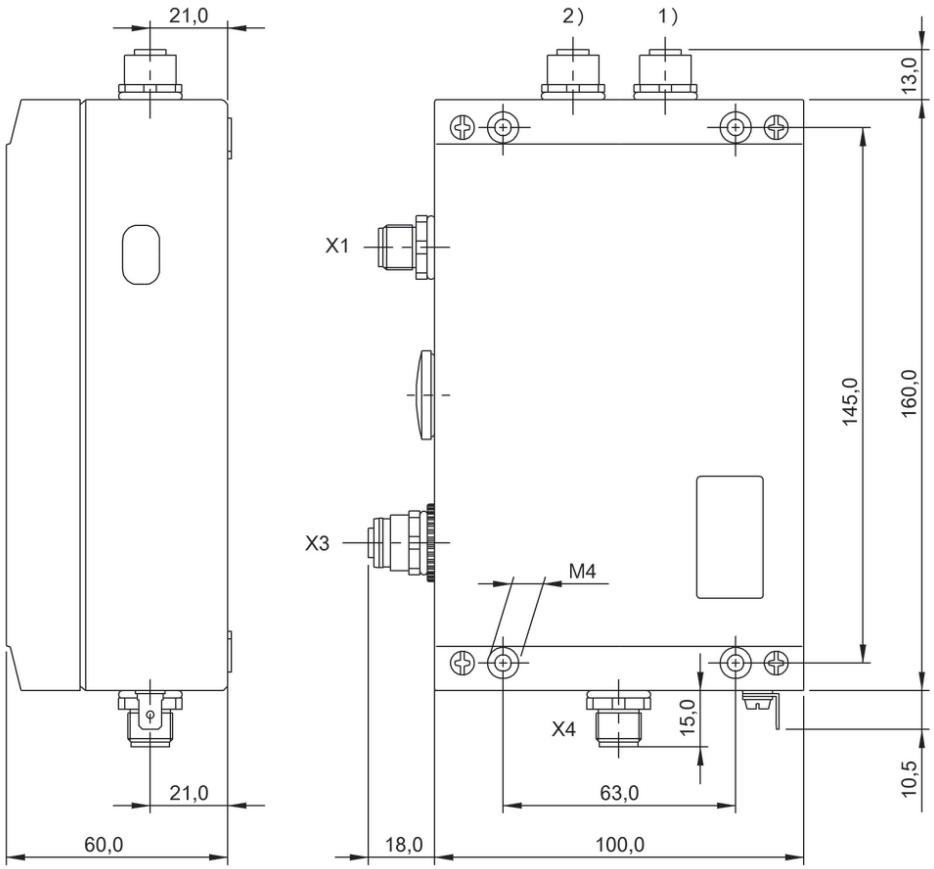

1) Head 1, 2) Head 2

BIS00F2

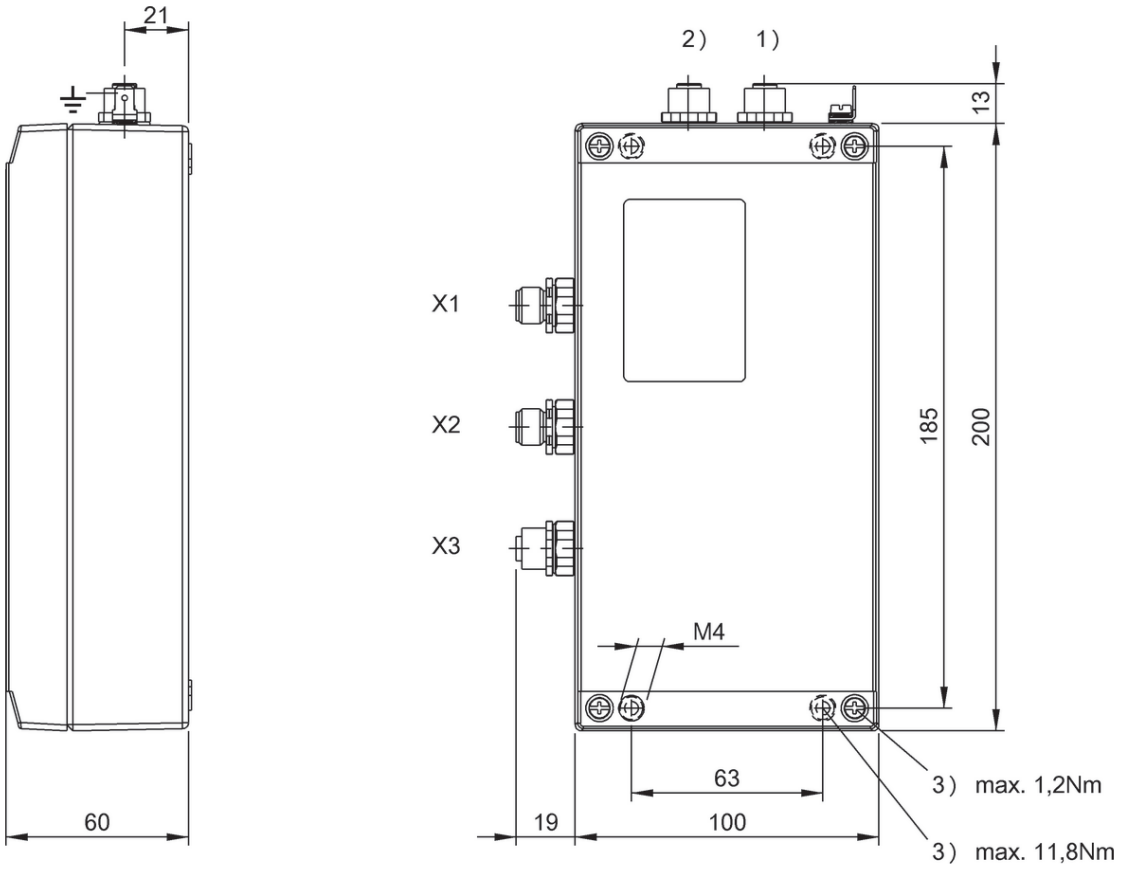

1) Head 1, 2) Head 2, 3) Tightening torque

BIS00LY

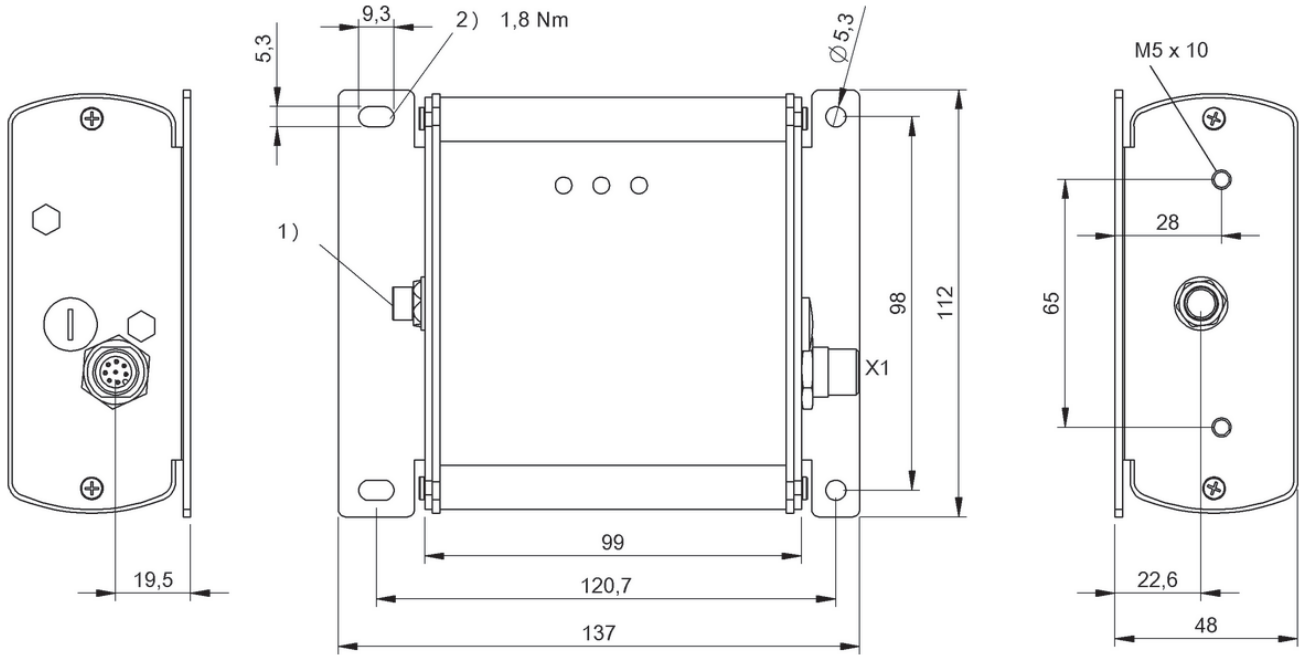

1) Antenna, 2) Tightening torque

BIS00ZJ

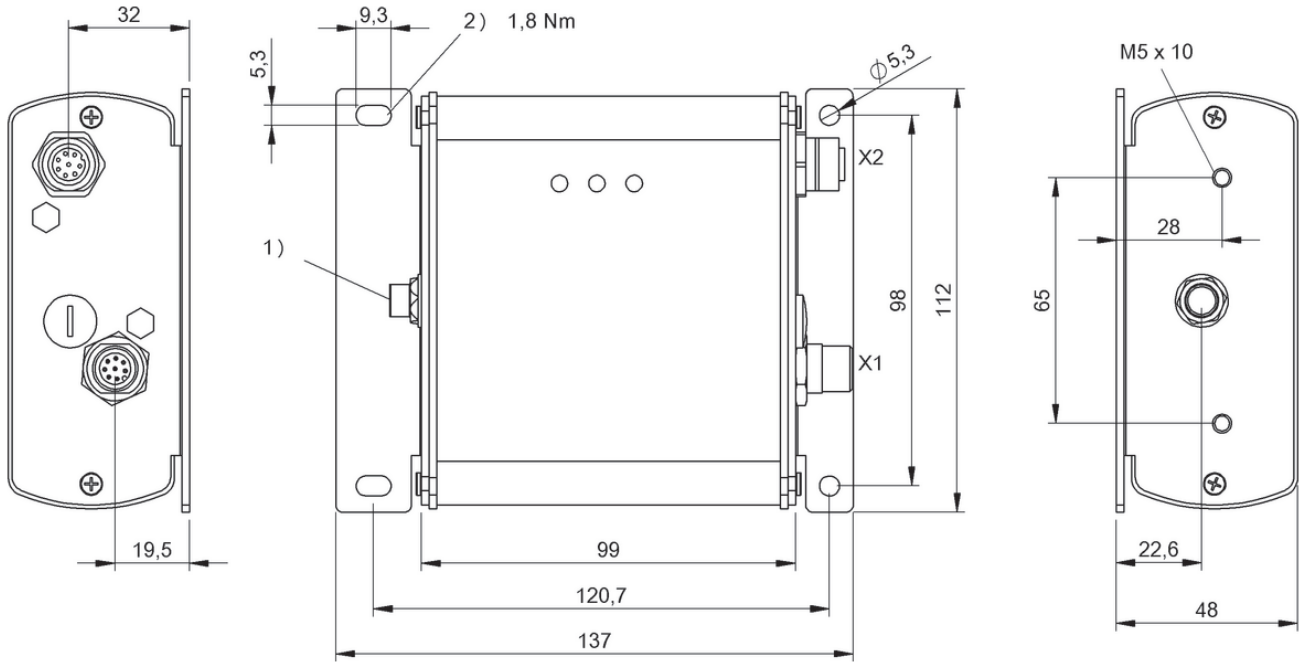

1) Antenna, 2) Tightening torque

BIS00ZH

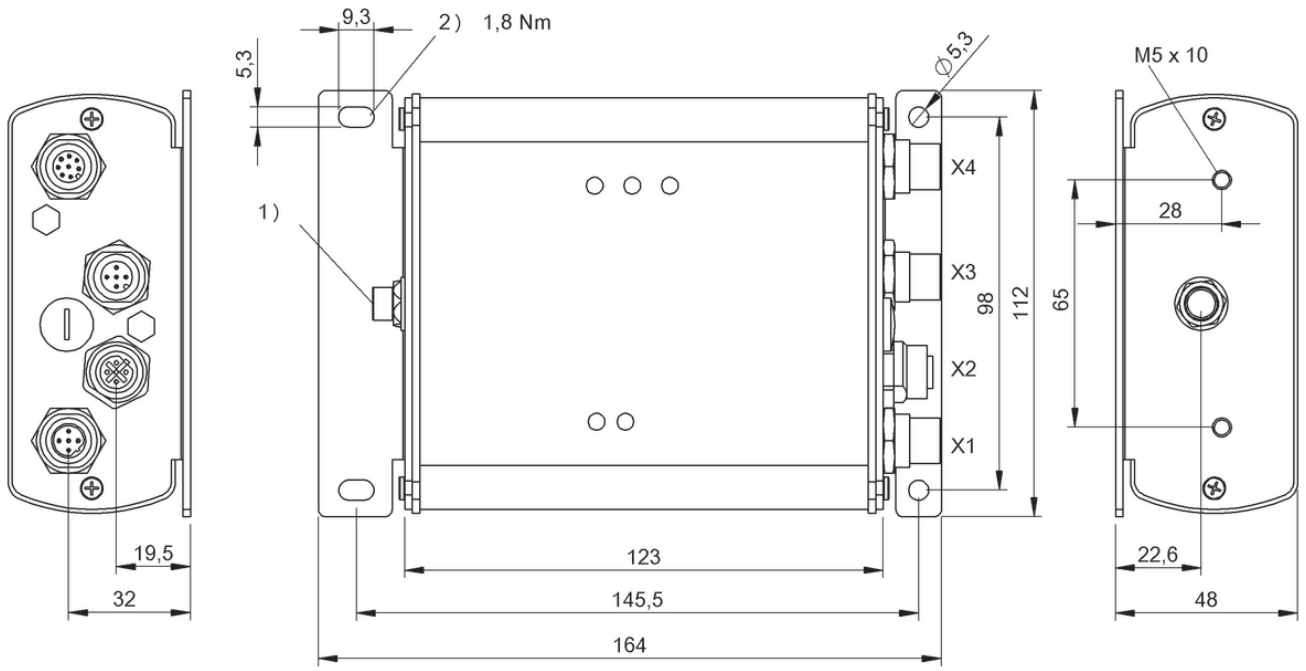

1) Antenna, 2) Tightening torque

BIS00ZF

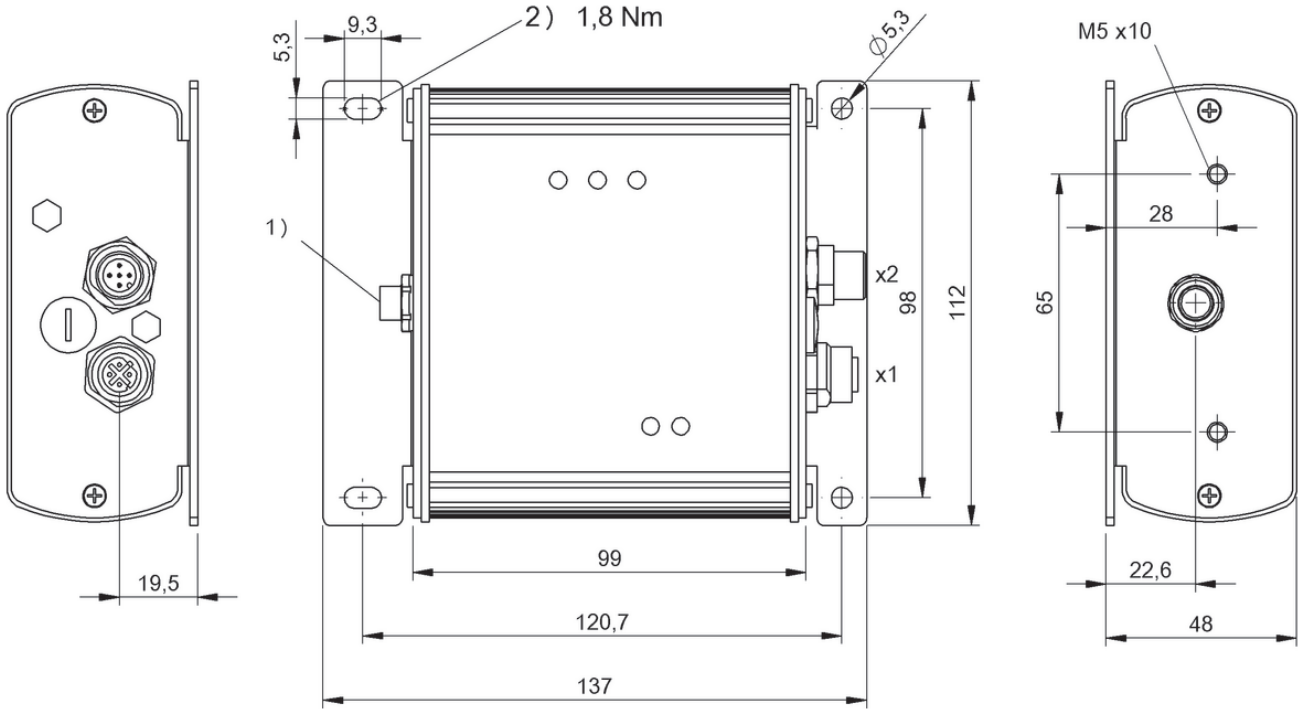

1) Antenna, 2) Tightening torque

BIS00ZC

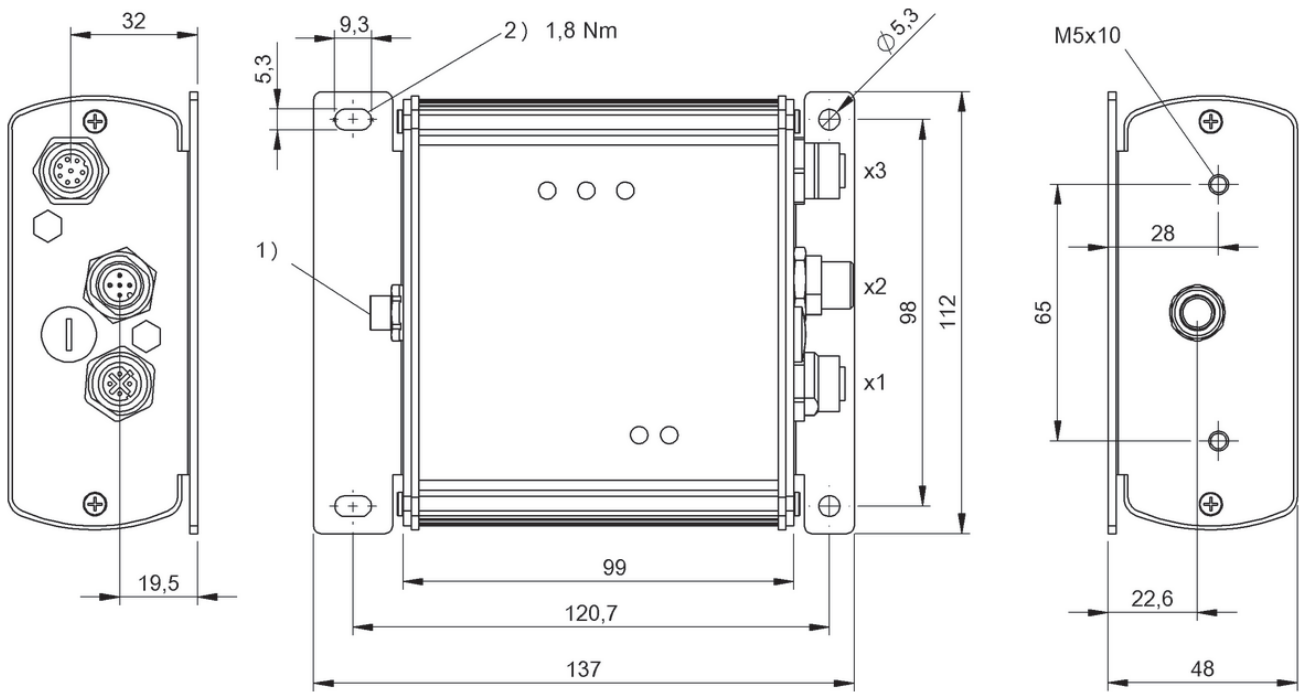

1) Antenna, 2) Tightening torque

BIS00ZA

	BIS00EK BIS M-400-007-002-00-S115
Product Group	HF (13.56 MHz)
Dimension	Ø 30 x 109.5 mm
Installation	metal-free (clear zone)
Antenna type	round
Supported data carrier types	DIN ISO 14443, DIN ISO 15693
Connection	Connector, M12x1 connector, 8-pin
Housing material	Brass, nuts nickel plated brass
Interface	RS232
Operating voltage Ub	19.2...26.4 VDC
Ambient temperature	0...70 °C
Protection degree	IP67
Approval/Conformity	CE, FCC Part 15, IC RSS-210, UL-FILE E227256, Vol.X1, BIS

Appropriate data carrier

	BIS003Y			BIS003Z			BIS0040		BIS0042		BIS0048		BIS004A		BIS0043	
Data carrier distance to metal	>25	>10	>5	>50	>25	>10	>10	>0	>10	>0	>10	>0	>10	>0	>25	>0
Data carrier clear zone	>60	>50	>50	>60	>50	>50	>60	>0	>60	>0	>60	>0	>60	>0	>60	>0
Working distance for writing	0-15	0-12	0-9	0-18	0-18	0-10	0-6	0-5	0-9	0-5	0-5	0-4	0-6	0-5	0-20	0-12
Working distance for reading	0-15	0-12	0-9	0-18	0-18	0-10	0-6	0-5	0-9	0-5	0-5	0-4	0-6	0-5	0-20	0-12
Offset at distance																
0	±9	±6	±4	±16	±12	±4	±5	±4	±6	±4	±4	±3	±4	±3	±14	±10
5	±9	±6	±4	±16	±12	±4	±4	±2	±6	±2	±3		±3	±2	±14	±8
9	±8	±4	±2	±12	±10	±2			±2						±12	±6
12	±6	±2		±8	±5										±10	±4
15	±4			±8	±5										±10	
16				±7	±3										±7	
18				±6	±2										±7	
20															±7	
22																
25																

Dimensions in mm

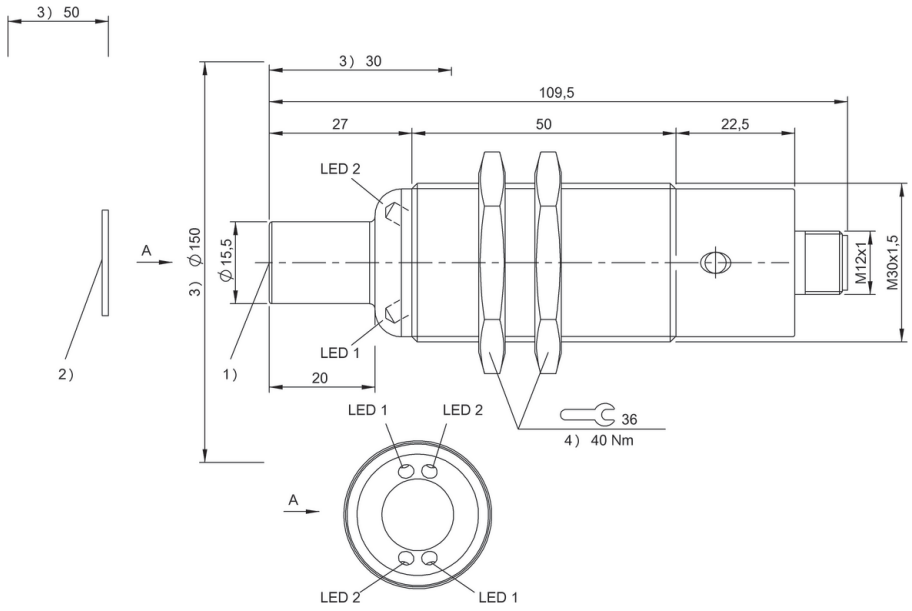

1) Sensing surface, 2) Data carrier, 3) Clear zone, 4) Tightening torque

	BIS0044			BIS0045			BIS0046				BIS00YE		BIS00NU BIS00NW BIS0100	
	>25	>15	>5	>25	>10	>5	>50	>25	>20		>25		>0	
	>80	>50	>50	>80	>50	>50	>150	>90	>70		>100		>100	
	0-15	0-10	0-6	0-20	0-12	0-5	0-28	0-18	0-10		0-24		0-12	
	0-15	0-10	0-6	0-20	0-12	0-5	0-28	0-18	0-10		0-24		0-12	
	±8	±6	±4	±12	±8	±7	±20	±14	±14	0	±14		±7	
	±8	±6	±4	±12	±8	±4	±20	±14	±14	5	±14		±7	
	±6	±5		±10	±6		±18	±14	±10	10	±14		±6	
	±4			±10	±4		±18	±12	±6	12	±12		±2	
	±4			±10			±18	±12		15	±12			
				±7			±16	±10		20	±12			
				±7			±16	±8		24	±6			
				±7			±16			30				
							±12			35				
							±12			40				

	BIS00EJ BIS M-400-007-001-00-S115
Product Group	HF (13.56 MHz)
Dimension	Ø 30 x 83 mm
Installation	metal-free (clear zone)
Antenna type	round
Supported data carrier types	DIN ISO 14443, DIN ISO 15693
Connection	Connector, M12x1 connector, 8-pin
Housing material	Brass, nuts nickel plated brass
Interface	RS232
Operating voltage Ub	19.2...26.4 VDC
Ambient temperature	0...70 °C
Protection degree	IP67
Approval/Conformity	CE, UL-FILE E227256, Vol.X1, BIS, FCC, IC

Appropriate data carrier

	BIS003Y			BIS003Z			BIS0040		BIS0042		BIS0043			BIS0044			BIS0045		
Data carrier distance to metal	>25	>10	>5	>50	>15	>10	>20	>5	>20	>5	>25	>0		>25	>10	>5	>25	>10	>5
Data carrier clear zone	>100	>60	>50	>150	>90	>70	>100	>100	>100	>100	>100	>0		>100	>60	>50	>100	>60	>50
Working distance for writing	0-20	0-15	0-12	0-28	0-20	0-12	0-7	0-6	0-11	0-7	0-28	0-16		0-20	0-15	0-8	0-28	0-18	0-10
Working distance for reading	0-20	0-15	0-12	0-28	0-20	0-12	0-7	0-6	0-11	0-7	0-28	0-16		0-20	0-15	0-8	0-28	0-18	0-10
Offset at distance																			
0																			
5	±14	±10	±6	±20	±15	±6	±7	±6	±9	±6	±16	±10	0	±12	±8	±6	±16	±10	±7
9	±14	±10	±6	±20	±15	±6	±7	±6	±8	±6	±16	±10	2	±12	±8	±5	±16	±10	±7
12	±14	±8	±4	±20	±15	±3			±5		±14	±8	5	±12	±8	±5	±16	±10	±7
15	±10	±4	±2	±20	±13	±2					±14	±6	7	±10	±6	±4	±14	±8	±2
16	±10	±2		±20	±10						±14	±6	8	±10	±6	±2	±14	±8	±2
18	±8			±18	±3						±14	±4	9	±10	±6		±14	±8	±2
20	±6			±16							±14		10	±8	±4		±14	±7	±1
22	±5			±15							±14		12	±8	±4		±14	±7	
25				±15							±12		13	±8	±2		±14	±6	
30				±10							±12		15	±8	±2		±14	±6	
32													16	±5			±14	±3	
35													18	±5			±14	±2	
40													20	±5			±14		
43													22				±12		
45													25				±12		
50													27				±6		
52													28				±6		
60													30						
65													35						
70													38						
													45						

Dimensions in mm

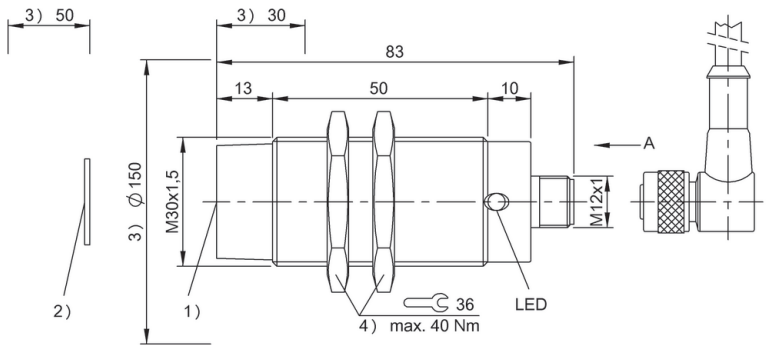

1) Sensing surface, 2) Data carrier, 3) Clear zone, 4) Tightening torque

	BIS0046			BIS0048		BIS004A			BIS00LC		BIS00M9 BIS00M8		BIS00NU BIS00NW BIS0100			BIS0143		BIS00YE		BIS00Y7		BIS00Y5		BIS00Y4
	>50	>15	>10	>20		>20	>0		>25	>0	>0		>0			>25		>25	>0	>25		>50		>50
	>150	>90	>70	>100		>100	>0		>100	>100	>100		>100			>100		>100	>100	>100		>150		>150
	0-38	0-25	0-15	0-9.5		0-13	0-7		0-27	0-13	0-22		0-13			0-27		0-30	0-8	0-24		0-50		0-42
	0-38	0-25	0-15	0-9.5		0-13	0-7		0-27	0-13	0-22		0-13			0-27		0-30	0-8	0-24		0-50		0-42
	±22	±16	±13	±9		±10	±7	0	±16	±10	±13		±10		0	±18		±18	±8	±18		±30		±30
	±22	±16	±13	±9		±10	±7	5	±16	±10	±13		±10		5	±18		±18	±8	±18		±30		±30
	±22	±16	±13	±8		±10	±6	10	±16	±7	±13		±9		7	±18		±18	±6	±18		±30		±30
	±22	±14	±10	±7		±8	±1	13	±14	±5	±11		±5		8	±18		±18	±3	±18		±30		±30
	±22	±14	±10	±1		±8		15	±14		±11				10	±18		±18		±18		±30		±30
	±22	±14	±10	±1		±8		18	±14		±11				15	±16		±18		±16		±30		±28
	±20	±13	±8			±8		20	±14		±7				20	±16		±18		±16		±30		±28
	±20	±13	±8			±3		22	±12		±7				24	±10		±16		±5		±25		±24
	±20	±12	±6			±3		25	±12						25	±10		±16				±25		±24
	±20	±12	±6					27	±5						27	±5		±5				±25		±24
	±20	±10						30							30			±5				±25		±24
	±20	±10						32							35							±25		±24
	±20	±8						35							40							±25		±5
	±20	±6						40							42							±5		±5
	±20	±4						43							45							±5		
	±16							45							50							±5		
	±16							50							40									
	±16							52							42									
	±10							60							45									
	±5							65							50									
								70							55									

Do you need more details? Our Product Finder at www.balluff.com provides you with product-specific information, including technical drawings, data sheets, user guides and more for each individual product. All items are available for download.

	BIS00EM BIS M-401-007-001-00-S115
Product Group	HF (13.56 MHz)
Dimension	80 x 40 x 84.5 mm
Installation	metal-free (clear zone)
Antenna type	round
Supported data carrier types	DIN ISO 14443, DIN ISO 15693
Connection	Connector, M12x1 connector, 8-pin
Housing material	PBT
Interface	RS232
Operating voltage Ub	19.2...26.4 VDC
Ambient temperature	0...70 °C
Protection degree	IP67
Approval/Conformity	CE, FCC Part 15, IC RSS-210, UL-FILE E227256, Vol.X1, BIS

Appropriate data carrier

	BIS003Y			BIS003Z			BIS0047	BIS0043		BIS0044		BIS0045		BIS0046	
Data carrier distance to metal	>50	>25	>10	>50	>25	>10	>80	>50	>20	>50	>30	>50	>30	>50	>30
Data carrier clear zone	>200	>150	>150	>200	>150	>150	>250	>200	>60	>200	>100	>200	>100	>200	>100
Working distance for writing	0-28	0-25	0-20	0-45	0-40	0-34	0-50	0-40	0-18	0-30	0-18	0-40	0-25	0-60	0-35
Working distance for reading	0-28	0-25	0-20	0-45	0-40	0-34	0-50	0-40	0-18	0-30	0-18	0-40	0-25	0-60	0-35
Offset at distance															
0	±22	±18	±12	±30	±24	±16	±30	±30	±16	±25	±18	±30	±20	±35	±25
5	±22	±18	±12	±30	±24	±16	±30	±30	±16	±25	±18	±30	±20	±35	±25
9	±22	±18	±10	±30	±24	±16	±30	±30	±16	±25	±15	±30	±20	±35	±25
12	±22	±16	±8	±30	±24	±14	±30	±25	±16	±20	±15	±25	±20	±35	±25
15	±22	±16	±8	±30	±24	±14	±30	±25	±16	±20	±12	±25	±18	±35	±25
16	±20	±15	±6	±30	±20	±12	±30	±25	±16	±20	±12	±25	±18	±35	±25
18	±20	±13	±4	±30	±20	±10	±30	±25	±14	±20	±8	±25	±16	±35	±25
20	±20	±12	±2	±30	±20	±10	±30	±25		±20		±25	±14	±35	±25
22	±16	±8		±24	±18	±8	±30	±20		±15		±20	±12	±35	±22
25	±12	±4		±24	±18	±8	±30	±20		±15		±20	±10	±35	±22
30				±24	±15	±6	±28	±20		±10		±20		±35	±22
32				±20	±12	±4	±24	±15		±10		±15		±35	±22
35				±20	±10		±22	±15				±15		±35	±20
40				±15	±5		±18	±15				±15		±35	
43				±8			±14							±25	
45				±5			±12							±25	
50							±4							±25	
52														±25	
60														±25	

Dimensions in mm

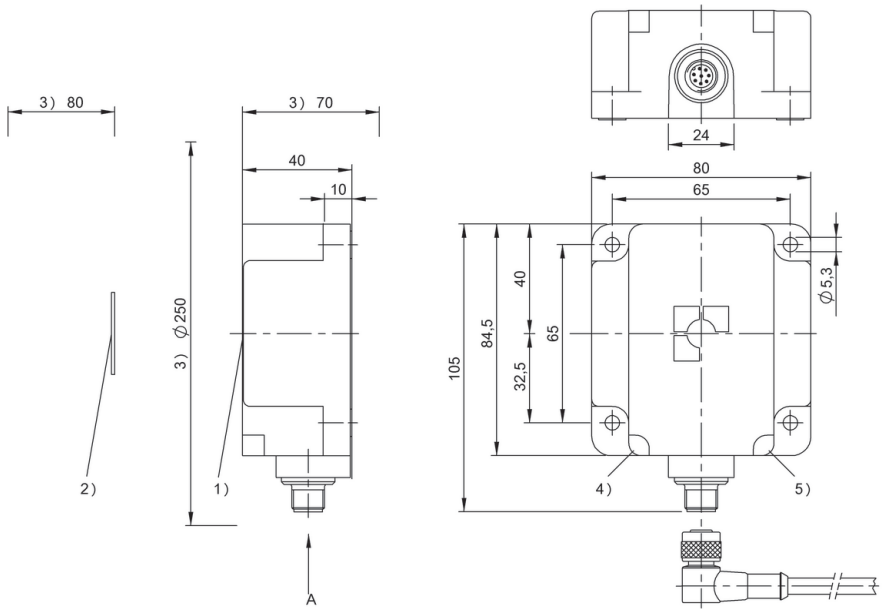

1) Sensing surface, 2) Data carrier, 3) Clear zone, 4) LED (Power), 5) LED (TP)

	BIS00M9 BIS00M8	BIS00NU BIS00NW BIS0100		BIS00YE	BIS00Y4
	>0	>0		>50	>50
	>100	>100		>200	>200
	0-32	0-16		0-50	0-75
	0-32	0-16		0-50	0-75
	±25	±24	0	±30	±50
	±25	±24	5	±30	±50
	±25	±20	10	±30	±50
	±25	±14	15	±30	±50
	±25	±4	20	±30	±50
	±25	±4	25	±28	±50
	±25		30	±28	±50
	±25		35	±28	±50
	±20		40	±28	±50
	±20		45	±10	±45
	±15		50	±10	±45
	±15		55		±45
			60		±45
			65		±35
			70		±35
			75		±35
			80		
			85		
			90		

Do you need more details? Our Product Finder at www.balluff.com provides you with product-specific information, including technical drawings, data sheets, user guides and more for each individual product. All items are available for download.

	BIS00ER BIS M-451-007-001-00-S115
Product Group	HF (13.56 MHz)
Dimension	80 x 40 x 84.5 mm
Installation	metal-free (clear zone)
Antenna type	Rod
Supported data carrier types	DIN ISO 14443, DIN ISO 15693
Connection	Connector, M12x1 connector, 8-pin
Housing material	PBT
Interface	RS232
Operating voltage Ub	19.2...26.4 VDC
Ambient temperature	0...70 °C
Protection degree	IP67
Approval/Conformity	CE, FCC Part 15, IC RSS-210, UL-FILE E227256, Vol.X1, BIS

Appropriate data carrier

	BIS004F				BIS004H					BIS00M2				BIS00P3	
Data carrier clear zone A	>200	>200	>200	>200	>200	>200	>200	>200		>200	>200	>10	>10	>240	>240
Data carrier clear zone B	>200	>200	>200	>200	>200	>200	>200	>200		>200	>200	>50	>50	>480	>480
Data carrier clear zone C										>50	>50	>2	>2	>50	>50
Metallic mounting surface 40 × 22 mm	0-52	0-52			0-52	0-52									
Metallic mounting surface > 200 × 200 mm			0-65	0-65			0-65	0-65							
Working distance for writing	0-52	0-52	0-65	0-65	0-52	0-52	0-65	0-65		0-30	0-30	15-30	15-30	0-100	0-100
Working distance for reading	0-52	0-52	0-65	0-65	0-52	0-52	0-65	0-65		0-30	0-30	15-30	15-30	0-100	0-100
Offset at distance	X	Y	X	Y	X	Y	X	Y		X	Y	X	Y	X	Y
0	±60	±25	±65	±26	±25	±60	±26	±65	0	±35	±20			±60	±20
5	±60	±25	±65	±26	±25	±60	±26	±65	5	±35	±20			±60	±20
12	±60	±25	±65	±25	±25	±60	±25	±65	10	±35	±20			±60	±20
15	±60	±25	±65	±25	±25	±60	±25	±65	15	±35	±20	±35	±15	±60	±20
18	±60	±25	±65	±25	±25	±60	±25	±65	20	±35	±20	±35	±15	±60	±20
20	±60	±25	±65	±25	±25	±60	±25	±65	25	±20	±12	±28	±15	±60	±20
22	±60	±25	±65	±25	±25	±60	±25	±65	30	±20	±12	±28	±15	±60	±20
25	±60	±25	±65	±25	±25	±60	±25	±65	35					±60	±20
30	±60	±25	±65	±25	±25	±60	±25	±65	40					±60	±20
32	±50	±25	±65	±25	±25	±50	±25	±65	45					±60	±20
35	±50	±25	±65	±25	±25	±50	±25	±65	50					±60	±20
40	±50	±20	±50	±25	±20	±50	±25	±50	60					±60	±20
45	±25	±20	±50	±25	±20	±25	±25	±50	70					±60	±20
50	±25	±20	±50	±25	±20	±25	±25	±50	80					±60	±20
52	±25	±8	±25	±25	±8	±25	±25	±25	90					±40	±20
60			±25	±10			±10	±25	100					±40	±20
65			±25	±10			±10	±25							

Dimensions in mm

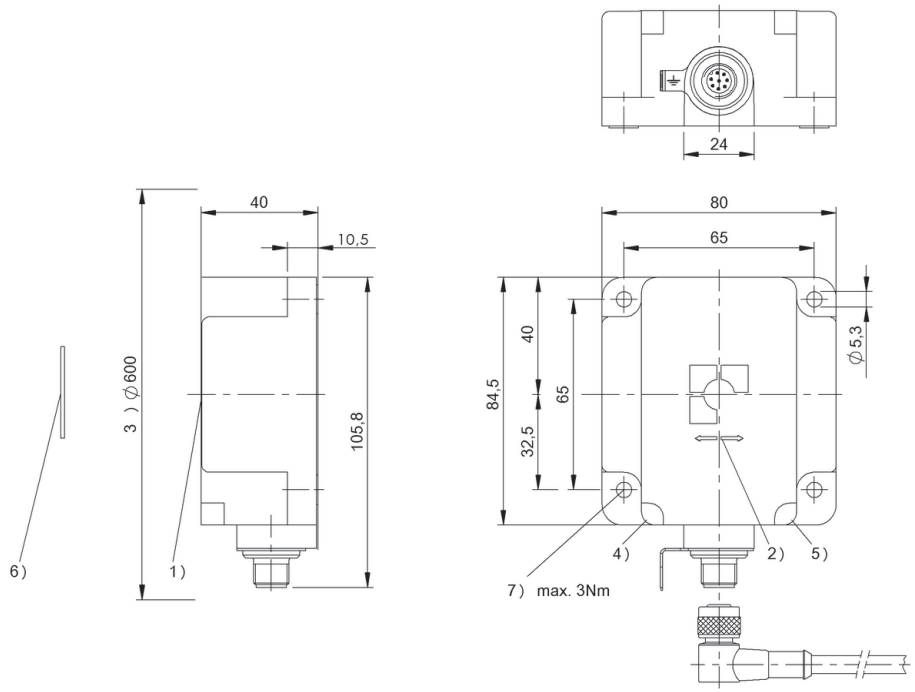

1) Sensing surface, 2) Read/write axis, 3) Clear zone, 4) LED (Power), 5) LED (TP), 6) Data carrier on steel, 7) Tightening torque

	BIS00RU BIS M-402-007-004-00-S115
Product Group	HF (13.56 MHz)
Dimension	25 x 10 x 50 mm
Installation	metal-free (clear zone)
Antenna type	round
Supported data carrier types	DIN ISO 14443, DIN ISO 15693
Connection	Connector, M12x1 connector, 8-pin, 0.50 m, PU
Housing material	ABS, GF16, interface aluminum
Interface	RS232
Operating voltage Ub	19.2...26.4 VDC
Ambient temperature	0...70 °C
Protection degree	IP67
Approval/Conformity	CE, UL-FILE E227256, Vol.X1, BIS, FCC, IC

Appropriate data carrier

	BIS0040		BIS0042		BIS0044		BIS0048		BIS004A			BIS00NU BIS00NW BIS0100		BIS003Y	
Data carrier distance to metal	>10	>0	>10	>0	>25		>10	>0	>10	>0		>0		>25	
Data carrier clear zone	>60	>0	>60	>0	>80		>60	>0	>60	>0		>100		>100	
Working distance for writing	0-6	0-4	0-8	0-6	0-15		0-5	0-4	0-8	0-5		0-9		0-15	
Working distance for reading	0-6	0-4	0-8	0-6	0-15		0-5	0-4	0-8	0-5		0-9		0-15	
Offset at distance															
0	±4	±3	±5	±4	±8		±4	±3	±4	±4	0	±6		±11	
5	±2		±5	±2	±8		±2		±4	±2	5	±6		±11	
9					±6						7	±6		±9	
12					±4						9	±4		±9	
15					±4						12			±9	
16											15			±5	

Dimensions in mm

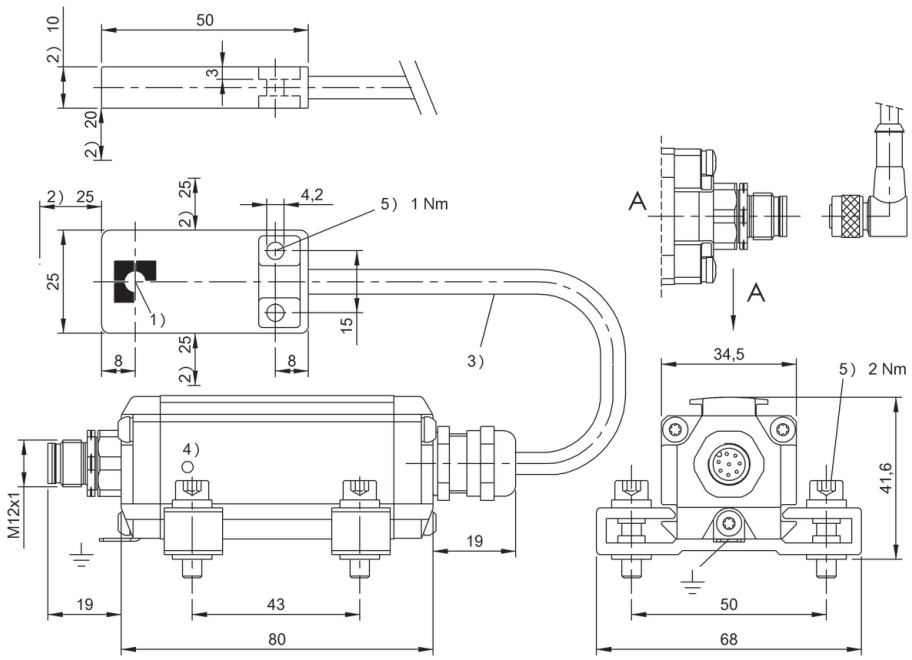

1) Sensing surface, 2) Clear zone, 3) Cable length see text, 4) LED function indicator, 5) Tightening torque

	BIS00EN BIS M-402-007-002-00-S115
Product Group	HF (13.56 MHz)
Dimension	Ø 18 x 44.5 mm
Installation	metal-free (clear zone)
Antenna type	round
Supported data carrier types	DIN ISO 14443, DIN ISO 15693
Connection	Connector, M12x1 connector, 8-pin, 0.50 m, PU
Housing material	Brass, interface aluminum
Interface	RS232
Operating voltage Ub	19.2...26.4 VDC
Ambient temperature	0...70 °C
Protection degree	IP67
Approval/Conformity	CE, UL-FILE E227256, Vol.X1, BIS, FCC, IC

Appropriate data carrier

	BIS0040		BIS0042		BIS0048		BIS004A		BIS0044			BIS003Y		BIS0045		
Data carrier distance to metal	>10	>0	>10	>0	>10	>0	>10	>0	>25			>25		>25		
Data carrier clear zone	>60	>0	>60	>0	>60	>0	>60	>0	>80			>100		>100		
Working distance for writing	0-6	0-4	0-8	0-6	0-5	0-4	0-8	0-5	0-15			0-14		0-18		
Working distance for reading	0-6	0-4	0-8	0-6	0-5	0-4	0-8	0-5	0-15			0-14		0-18		
Offset at distance																
0	±3	±3	±4	±3	±3	±2	±4	±3	±7		0	±10		±12		
5	±2		±3	±2	±2		±3	±2	±7		5	±10		±12		
9									±5		10	±9		±11		
12									±3		14	±5		±10		
15									±3		15			±10		
16											18			±5		

Dimensions in mm

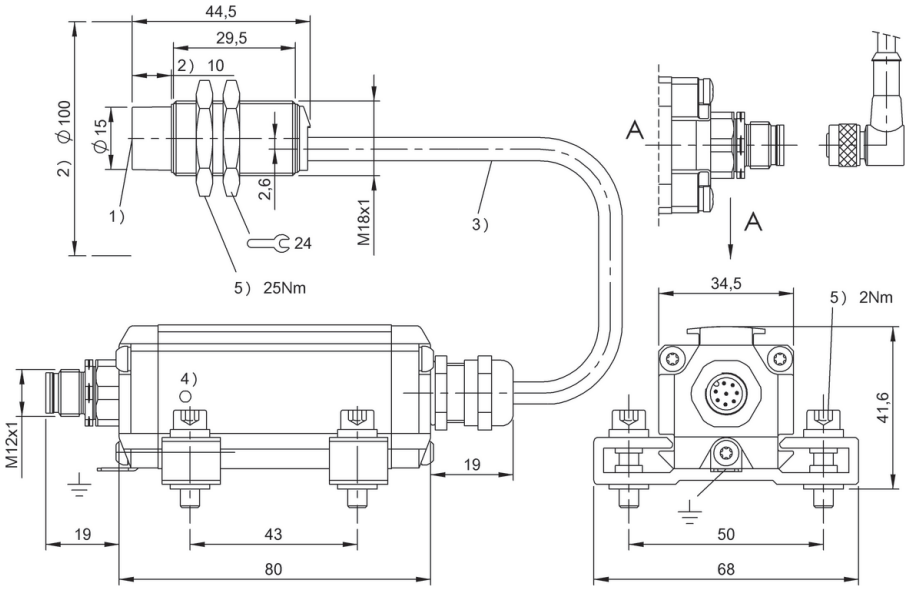

1) Sensing surface, 2) Clear zone, 3) Cable length, 4) LED function indicator, 5) Tightening torque

	BIS00YL	BIS00YK	BIS00YE	BIS00NU BIS00NW BIS0100
	>25	>25	>25	>0
	>100	>100	>100	>100
	0-9	0-9	0-20	0-9
	0-9	0-9	0-20	0-9
	±6	±6	±12	±6
	±6	±6	±12	±6
	±5	±5	±12	±6
	±1	±1	±12	±4
			±12	
			±10	

IO-Link, 10 bytes process data length	**BIS018E** BIS M-404-045-401-07-S4-SA1
Product Group	HF (13.56 MHz)
Dimension	28 x 60 x 33.4 mm
Installation	metal-free (clear zone) on metal flush in metal
Antenna type	round
Supported data carrier types	DIN ISO 15693, DIN ISO 15693 (High Memory)
Connection	Connector, M12x1 connector, 4-pin
Housing material	Die casting Brass nickel plated, nuts nickel plated brass
Interface	IO-Link 1.1
Operating voltage Ub	18...30 VDC Supports only LPS/Class 2
Ambient temperature	0...70 °C
Protection degree	IP67
Approval/Conformity	CE, FCC Part 15, IC RSS-210

Use with data carrier **BIS0180** only

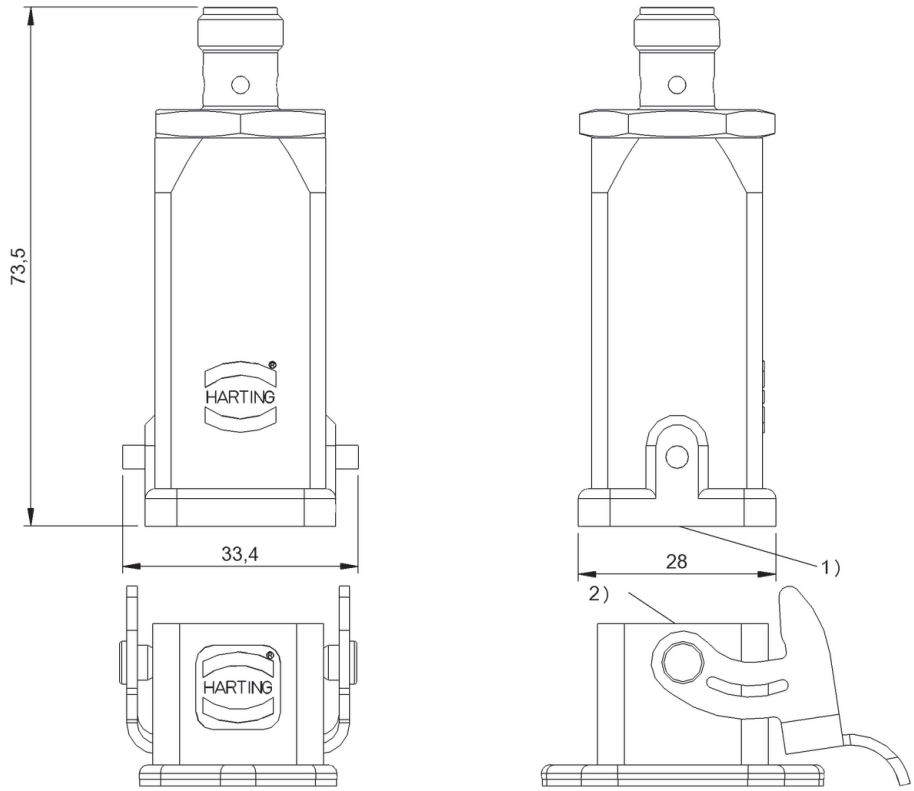

1) Sensing surface, 2) Data carrier

IO-Link, 10 bytes process data length	**BIS015R** BIS M-404-045-401-07-S4
Product Group	HF (13.56 MHz)
Dimension	Ø 18 x 65 mm
Installation	metal-free (clear zone) on metal flush in metal
Antenna type	round
Supported data carrier types	DIN ISO 15693, DIN ISO 15693 (High Memory)
Connection	Connector, M12x1 connector, 4-pin
Housing material	Brass, nuts nickel plated brass
Interface	IO-Link 1.1
Operating voltage Ub	18...30 VDC Supports only LPS/Class 2
Ambient temperature	0...70 °C
Protection degree	IP67
Approval/Conformity	CE, FCC Part 15, IC RSS-210

Use with **IO-Link master** only

Appropriate data carrier

	BIS0042			**BIS0043**			**BIS011F** **BIS011E** **BIS011A** **BIS0139**			**BIS004A**			**BIS0143**		
Data carrier distance to metal	>20	>0	>0	>20	>0	>0	>20	>0	>0	>20	>0	>0	>20		
Data carrier clear zone	>100	>100	>0	>100	>100	>0	>100	>100	>0	>100	>100	>0	>100		
Working distance for writing	0-8.5	0-8	0-6	0-11	0-8	0-6	0-6.5	0-6	0-5	0-6	0-5.5	0-3.5	0-13		
Working distance for reading	0-8.5	0-8	0-6	0-11	0-8	0-6	0-6.5	0-6	0-5	0-6	0-5.5	0-3.5	0-13		
Offset at distance															
0	±5	±5	±4	±8	±8	±7	±8	±8	±7	±4.5	±4	±3.5	±8		
2	±5	±5	±4	±8	±8	±7	±8	±8	±7	±4.5	±4	±3	±8		
3.5	±4.5	±4	±3	±8	±7	±6	±7	±7	±6	±4	±3	±1.5	±8		
4	±4.5	±4	±3	±8	±7	±6	±7	±7	±6	±4	±3		±8		
4.5	±4.5	±4	±3	±8	±7	±4	±7	±6	±3	±3.5	±3		±8		
5	±4.5	±4	±3	±8	±7	±4	±7	±6	±3	±3.5	±2		±8		
5.5	±4	±3	±2	±7	±5	±1	±4	±3		±2	±2		±7		
6	±4	±3	±2	±7	±5	±1	±4	±3		±2			±7		
6.5	±4	±3		±7	±5		±4						±7		
7	±4	±3		±7	±5								±7		
8	±2	±2		±7	±4								±7		
8.5	±2			±7									±7		
10				±7									±7		
11				±4									±4		
13													±4		

Dimensions in mm

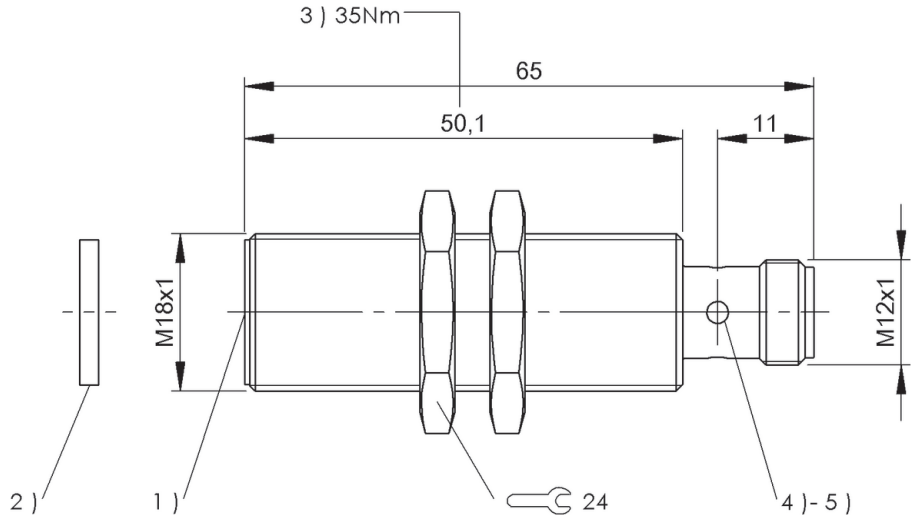

1) Sensing surface, 2) Data carrier, 3) Tightening torque, 4) LED (CP), 5) LED (Power)

		BIS0044		BIS00NU BIS00NW BIS0100	
		>25		>0	
		>100		>100	
		0-10		0-9.5	
		0-10		0-9.5	
	0	±6		±5	
	2	±6		±5	
	4	±6		±5	
	5	±6		±5	
	6	±5		±4	
	7	±5		±4	
	8	±5		±4	
	9.5	±3		±2	
	10	±3			
	12				
	15				
	20				
	25				
	30				
	35				

Do you need more details? Our Product Finder at www.balluff.com provides you with product-specific information, including technical drawings, data sheets, user guides and more for each individual product. All items are available for download.

IO-Link, 10 bytes process data length	**BIS00LH** BIS M-400-045-001-07-S4
Product Group	HF (13.56 MHz)
Dimension	Ø 30 x 83 mm
Installation	metal-free (clear zone)
Antenna type	round
Supported data carrier types	DIN ISO 14443, DIN ISO 15693
Connection	Connector, M12x1 connector, 4-pin
Housing material	Brass, nuts nickel plated brass
Interface	IO-Link 1.1
Operating voltage Ub	18...30 VDC Supports only LPS/Class 2
Ambient temperature	0...70 °C
Protection degree	IP67
Approval/Conformity	CE, UL-FILE E227256, Vol.X1, BIS, FCC, IC

Use with **IO-Link master** only

Appropriate data carrier

	BIS003Y			**BIS003Z**			**BIS0040**		**BIS0042**		**BIS0043**			**BIS0044**			**BIS0045**		
Data carrier distance to metal	>25	>10	>5	>50	>15	>10	>20	>5	>20	>5	>25	>0		>25	>10	>5	>25	>10	>5
Data carrier clear zone	>100	>60	>50	>150	>90	>70	>100	>100	>100	>100	>100	>0		>100	>60	>50	>100	>60	>50
Working distance for writing	0-20	0-15	0-12	0-28	0-20	0-12	0-7	0-6	0-11	0-7	0-28	0-16		0-20	0-15	0-8	0-28	0-18	0-10
Working distance for reading	0-20	0-15	0-12	0-28	0-20	0-12	0-7	0-6	0-11	0-7	0-28	0-16		0-20	0-15	0-8	0-28	0-18	0-10
Offset at distance																			
0																			
5	±14	±10	±6	±20	±15	±6	±7	±6	±9	±6	±16	±10	0	±12	±8	±6	±16	±10	±7
9	±14	±10	±6	±20	±15	±6	±7	±6	±8	±6	±16	±10	2	±12	±8	±5	±16	±10	±7
12	±14	±8	±4	±20	±15	±3			±5		±14	±8	5	±12	±8	±5	±16	±10	±7
15	±10	±4	±2	±20	±13	±2					±14	±6	7	±10	±6	±4	±14	±8	±2
16	±10	±2		±20	±10						±14	±6	8	±10	±6	±2	±14	±8	±2
18	±8			±18	±3						±14	±4	9	±10	±6		±14	±8	±2
20	±6			±16							±14		10	±8	±4		±14	±7	±1
22	±5			±15							±14		12	±8	±4		±14	±7	
25				±15							±12		13	±8	±2		±14	±6	
30				±10							±12		15	±8	±2		±14	±6	
32													16	±5			±14	±3	
35													18	±5			±14	±2	
40													20	±5			±14		
43													22				±12		
45													25				±12		
50													27				±6		
52													28				±6		
60													30						
65													35						
70													38						
													45						

Dimensions in mm

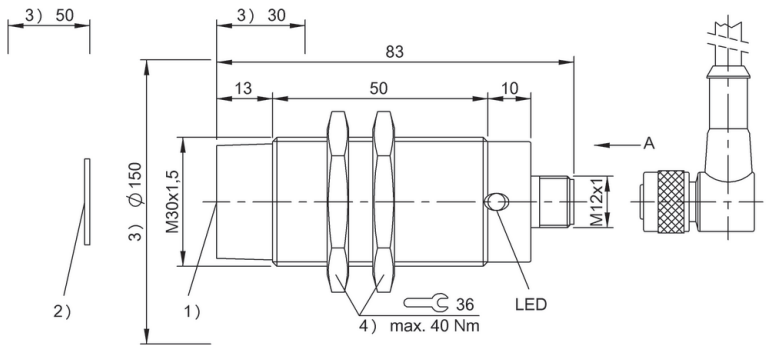

1) Sensing surface, 2) Data carrier, 3) Clear zone, 4) Tightening torque

	BIS0046			BIS0048		BIS004A			BIS00LC		BIS00M9 BIS00M8		BIS00NU BIS00NW BIS0100			BIS0143			BIS00YE		BIS00Y7		BIS00Y5		BIS00Y4
	>50	>15	>10	>20		>20	>0		>25	>0	>0		>0			>25			>25	>0	>25		>50		>50
	>150	>90	>70	>100		>100	>0		>100	>100	>100		>100			>100			>100	>100	>100		>150		>150
	0-38	0-25	0-15	0-9.5		0-13	0-7		0-27	0-13	0-22		0-13			0-27			0-30	0-8	0-24		0-50		0-42
	0-38	0-25	0-15	0-9.5		0-13	0-7		0-27	0-13	0-22		0-13			0-27			0-30	0-8	0-24		0-50		0-42
	±22	±16	±13	±9		±10	±7	0	±16	±10	±13		±10		0	±18			±18	±8	±18		±30		±30
	±22	±16	±13	±9		±10	±7	5	±16	±10	±13		±10		5	±18			±18	±8	±18		±30		±30
	±22	±16	±13	±8		±10	±6	10	±16	±7	±13		±9		7	±18			±18	±6	±18		±30		±30
	±22	±14	±10	±7		±8	±1	13	±14	±5	±11		±5		8	±18			±18	±3	±18		±30		±30
	±22	±14	±10	±1		±8		15	±14		±11				10	±18			±18		±18		±30		±30
	±22	±14	±10	±1		±8		18	±14		±11				15	±16			±18		±16		±30		±28
	±20	±13	±8			±8		20	±14		±7				20	±16			±18		±16		±30		±28
	±20	±13	±8			±3		22	±12		±7				24	±10			±16		±5		±25		±24
	±20	±12	±6			±3		25	±12						25	±10			±16				±25		±24
	±20	±12	±6					27	±5						27	±5			±5				±25		±24
	±20	±10						30							30				±5				±25		±24
	±20	±10						32							35								±25		±24
	±20	±8						35							40								±25		±5
	±20	±6						40							42								±5		±5
	±20	±4						43							45								±5		
	±16							45							50								±5		
	±16							50							40										
	±16							52							42										
	±10							60							45										
	±5							65							50										
								70							55										

Do you need more details? Our Product Finder at www.balluff.com provides you with product-specific information, including technical drawings, data sheets, user guides and more for each individual product. All items are available for download.

IO-Link, 10 bytes process data length	**BIS015T** BIS M-400-045-401-07-S4
Product Group	HF (13.56 MHz)
Dimension	Ø 30 x 65.9 mm
Installation	metal-free (clear zone) on metal flush in metal
Antenna type	round
Supported data carrier types	DIN ISO 15693, DIN ISO 15693 (High Memory)
Connection	Connector, M12x1 connector, 4-pin
Housing material	Brass, nuts nickel plated brass
Interface	IO-Link 1.1
Operating voltage Ub	18...30 VDC Supports only LPS/Class 2
Ambient temperature	0...70 °C
Protection degree	IP67
Approval/Conformity	CE, FCC Part 15, IC RSS-210

Use with **IO-Link master** only

Appropriate data carrier

	BIS0042	BIS0043 BIS0111			BIS004A	BIS0143		BIS0044	BIS0045	BIS0046
Data carrier distance to metal	>20	>25	>0	>0	>20	>20		>25	>25	>50
Data carrier clear zone	>100	>100	>100	>0	>100	>100		>100	>100	>150
Working distance for writing	0-13	0-21	0-15	0-13	0-9	0-21		0-18	0-21	0-30
Working distance for reading	0-13	0-21	0-15	0-13	0-9	0-21		0-18	0-21	0-30
Offset at distance										
0	±8	±13	±10	±10	±7	±12	0	±9	±13	±20
5	±8	±13	±10	±10	±7	±12	5	±9	±13	±20
8	±8	±13	±10	±9	±6	±12	10	±9	±13	±20
9	±7	±13	±8	±8	±4	±12	13	±8	±12	±18
10	±7	±13	±8	±8		±12	15	±8	±12	±18
13	±4	±12	±8	±3		±11	16	±4	±11	±18
15		±12	±3			±11	18	±4	±11	±18
18		±11				±10	20		±5	±18
20		±5				±5	21		±5	±16
21		±5				±5	25			±16
30							30			±8

Dimensions in mm

	BIS00NU BIS00NW BIS0100	
	>0	
	>100	
	0-13	
	0-13	
	±9	
	±9	
	±7	
	±3	

IO-Link, 32 bytes process data length	**BIS0108** BIS M-400-072-001-07-S4
Product Group	HF (13.56 MHz)
Dimension	Ø 30 x 83 mm
Installation	metal-free (clear zone)
Antenna type	round
Supported data carrier types	DIN ISO 14443, DIN ISO 15693
Connection	Connector, M12x1 connector, 4-pin
Housing material	Brass, nuts nickel plated brass
Interface	IO-Link 1.1
Operating voltage Ub	18...30 VDC Supports only LPS/Class 2
Ambient temperature	0...70 °C
Protection degree	IP67
Approval/Conformity	CE, UL-FILE E227256, Vol.X1, BIS, FCC, IC

Use with **IO-Link master** only

Appropriate data carrier

	BIS003Y			BIS003Z			BIS0040		BIS0042		BIS0043			BIS0044			BIS0045		
Data carrier distance to metal	>25	>10	>5	>50	>15	>10	>20	>5	>20	>5	>25	>0		>25	>10	>5	>25	>10	>5
Data carrier clear zone	>100	>60	>50	>150	>90	>70	>100	>100	>100	>100	>100	>0		>100	>60	>50	>100	>60	>50
Working distance for writing	0-20	0-15	0-12	0-28	0-20	0-12	0-7	0-6	0-11	0-7	0-28	0-16		0-20	0-15	0-8	0-28	0-18	0-10
Working distance for reading	0-20	0-15	0-12	0-28	0-20	0-12	0-7	0-6	0-11	0-7	0-28	0-16		0-20	0-15	0-8	0-28	0-18	0-10
Offset at distance																			
0																			
5	±14	±10	±6	±20	±15	±6	±7	±6	±9	±6	±16	±10	0	±12	±8	±6	±16	±10	±7
9	±14	±10	±6	±20	±15	±6	±7	±6	±8	±6	±16	±10	2	±12	±8	±5	±16	±10	±7
12	±14	±8	±4	±20	±15	±3			±5		±14	±8	5	±12	±8	±5	±16	±10	±7
15	±10	±4	±2	±20	±13	±2					±14	±6	7	±10	±6	±4	±14	±8	±2
16	±10	±2		±20	±10						±14	±6	8	±10	±6	±2	±14	±8	±2
18	±8			±18	±3						±14	±4	9	±10	±6		±14	±8	±2
20	±6			±16							±14		10	±8	±4		±14	±7	±1
22	±5			±15							±14		12	±8	±4		±14	±7	
25				±15							±12		13	±8	±2		±14	±6	
30				±10							±12		15	±8	±2		±14	±6	
32													16	±5			±14	±3	
35													18	±5			±14	±2	
40													20	±5			±14		
43													22				±12		
45													25				±12		
50													27				±6		
52													28				±6		
60													30						
65													35						
70													38						
													45						

Dimensions in mm

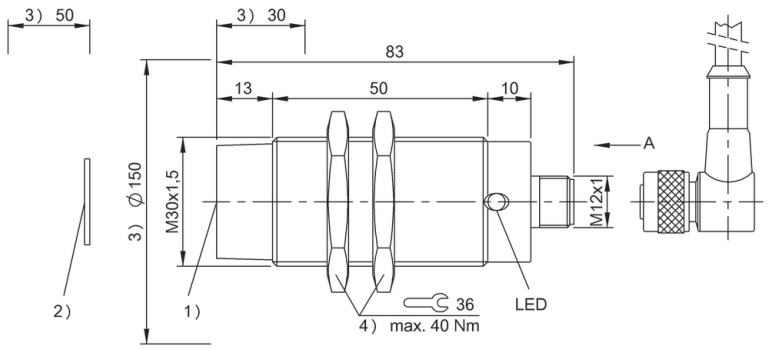

1) Sensing surface, 2) Data carrier, 3) Clear zone, 4) Tightening torque

BIS0046			BIS0048	BIS004A			BIS00LC		BIS00M9 BIS00M8	BIS00NU BIS00NW BIS0100			BIS0143		BIS00YE		BIS00Y7		BIS00Y5		BIS00Y4
>50	>15	>10	>20		>20	>0		>25	>0	>0		>0			>25		>25	>0	>25		>50		>50
>150	>90	>70	>100		>100	>0		>100	>100	>100		>100			>100		>100	>100	>100		>150		>150
0-38	0-25	0-15	0-9.5		0-13	0-7		0-27	0-13	0-22		0-13			0-27		0-30	0-8	0-24		0-50		0-42
0-38	0-25	0-15	0-9.5		0-13	0-7		0-27	0-13	0-22		0-13			0-27		0-30	0-8	0-24		0-50		0-42
±22	±16	±13	±9		±10	±7	0	±16	±10	±13		±10		0	±18		±18	±8	±18		±30		±30
±22	±16	±13	±9		±10	±7	5	±16	±10	±13		±10		5	±18		±18	±8	±18		±30		±30
±22	±16	±13	±8		±10	±6	10	±16	±7	±13		±9		7	±18		±18	±6	±18		±30		±30
±22	±14	±10	±7		±8	±1	13	±14	±5	±11		±5		8	±18		±18	±3	±18		±30		±30
±22	±14	±10	±1		±8		15	±14		±11				10	±18		±18		±18		±30		±30
±22	±14	±10	±1		±8		18	±14		±11				15	±16		±18		±16		±30		±28
±20	±13	±8			±8		20	±14		±7				20	±16		±18		±16		±30		±28
±20	±13	±8			±3		22	±12		±7				24	±10		±16		±5		±25		±24
±20	±12	±6			±3		25	±12						25	±10		±16				±25		±24
±20	±12	±6					27	±5						27	±5		±5				±25		±24
±20	±10						30							30			±5				±25		±24
±20	±10						32							35							±25		±24
±20	±8						35							40							±25		±5
±20	±6						40							42							±5		±5
±20	±4						43							45							±5		
±16							45							50							±5		
±16							50							40									
±16							52							42									
±10							60							45									
±5							65							50									
							70							55									

Do you need more details? Our Product Finder at www.balluff.com provides you with product-specific information, including technical drawings, data sheets, user guides and more for each individual product. All items are available for download.

IO-Link, 10 bytes process data length	**BIS00LJ** BIS M-400-045-002-07-S4
Product Group	HF (13.56 MHz)
Dimension	Ø 30 x 109.5 mm
Installation	metal-free (clear zone)
Antenna type	round
Supported data carrier types	DIN ISO 14443, DIN ISO 15693
Connection	Connector, M12x1 connector, 4-pin
Housing material	Brass, nuts nickel plated brass
Interface	IO-Link 1.1
Operating voltage Ub	18...30 VDC Supports only LPS/Class 2
Ambient temperature	0...70 °C
Protection degree	IP67
Approval/Conformity	CE, FCC Part 15, IC RSS-210, UL-FILE E227256, Vol.X1, BIS

Use with **IO-Link master** only

Appropriate data carrier

	BIS003Y			BIS003Z			BIS0040		BIS0042		BIS0048		BIS004A		BIS0043	
Data carrier distance to metal	>25	>10	>5	>50	>25	>10	>10	>0	>10	>0	>10	>0	>10	>0	>25	>0
Data carrier clear zone	>60	>50	>50	>60	>50	>50	>60	>0	>60	>0	>60	>0	>60	>0	>60	>0
Working distance for writing	0-15	0-12	0-9	0-18	0-18	0-10	0-6	0-5	0-9	0-5	0-5	0-4	0-6	0-5	0-20	0-12
Working distance for reading	0-15	0-12	0-9	0-18	0-18	0-10	0-6	0-5	0-9	0-5	0-5	0-4	0-6	0-5	0-20	0-12
Offset at distance																
0	±9	±6	±4	±16	±12	±4	±5	±4	±6	±4	±4	±3	±4	±3	±14	±10
5	±9	±6	±4	±16	±12	±4	±4	±2	±6	±2	±3		±3	±2	±14	±8
9	±8	±4	±2	±12	±10	±2			±2						±12	±6
12	±6	±2		±8	±5										±10	±4
15	±4			±8	±5										±10	
16				±7	±3										±7	
18				±6	±2										±7	
20															±7	
22																
25																

Dimensions in mm

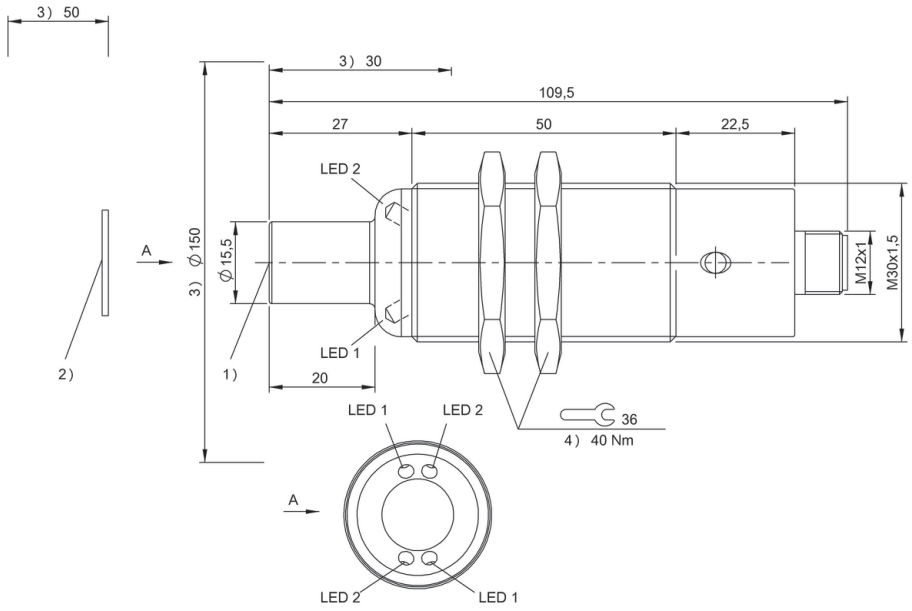

1) Sensing surface, 2) Data carrier, 3) Clear zone, 4) Tightening torque

	BIS0044			BIS0045			BIS0046				BIS00YE		BIS00NU BIS00NW BIS0100	
	>25	>15	>5	>25	>10	>5	>50	>25	>20		>25		>0	
	>80	>50	>50	>80	>50	>50	>150	>90	>70		>100		>100	
	0-15	0-10	0-6	0-20	0-12	0-5	0-28	0-18	0-10		0-24		0-12	
	0-15	0-10	0-6	0-20	0-12	0-5	0-28	0-18	0-10		0-24		0-12	
	±8	±6	±4	±12	±8	±7	±20	±14	±14	0	±14		±7	
	±8	±6	±4	±12	±8	±4	±20	±14	±14	5	±14		±7	
	±6	±5		±10	±6		±18	±14	±10	10	±14		±6	
	±4			±10	±4		±18	±12	±6	12	±12		±2	
	±4			±10			±18	±12		15	±12			
				±7			±16	±10		20	±12			
				±7			±16	±8		24	±6			
				±7			±16			30				
							±12			35				
							±12			40				

Do you need more details? Our Product Finder at www.balluff.com provides you with product-specific information, including technical drawings, data sheets, user guides and more for each individual product. All items are available for download.

IO-Link, 32 bytes process data length	**BIS0104** BIS M-400-072-002-07-S4
Product Group	HF (13.56 MHz)
Dimension	Ø 30 x 109.5 mm
Installation	metal-free (clear zone)
Antenna type	round
Supported data carrier types	DIN ISO 14443, DIN ISO 15693
Connection	Connector, M12x1 connector, 4-pin
Housing material	Brass, nuts nickel plated brass
Interface	IO-Link 1.1
Operating voltage Ub	18...30 VDC Supports only LPS/Class 2
Ambient temperature	0...70 °C
Protection degree	IP67
Approval/Conformity	CE, FCC Part 15, IC RSS-210, UL-FILE E227256, Vol.X1, BIS

Use with **IO-Link master** only

Appropriate data carrier

	BIS003Y			BIS003Z			BIS0040		BIS0042		BIS0048		BIS004A		BIS0043	
Data carrier distance to metal	>25	>10	>5	>50	>25	>10	>10	>0	>10	>0	>10	>0	>10	>0	>25	>0
Data carrier clear zone	>60	>50	>50	>60	>50	>50	>60	>0	>60	>0	>60	>0	>60	>0	>60	>0
Working distance for writing	0-15	0-12	0-9	0-18	0-18	0-10	0-6	0-5	0-9	0-5	0-5	0-4	0-6	0-5	0-20	0-12
Working distance for reading	0-15	0-12	0-9	0-18	0-18	0-10	0-6	0-5	0-9	0-5	0-5	0-4	0-6	0-5	0-20	0-12
Offset at distance																
0	±9	±6	±4	±16	±12	±4	±5	±4	±6	±4	±4	±3	±4	±3	±14	±10
5	±9	±6	±4	±16	±12	±4	±4	±2	±6	±2	±3		±3	±2	±14	±8
9	±8	±4	±2	±12	±10	±2			±2						±12	±6
12	±6	±2		±8	±5										±10	±4
15	±4			±8	±5										±10	
16				±7	±3										±7	
18				±6	±2										±7	
20															±7	
22																
25																

Dimensions in mm

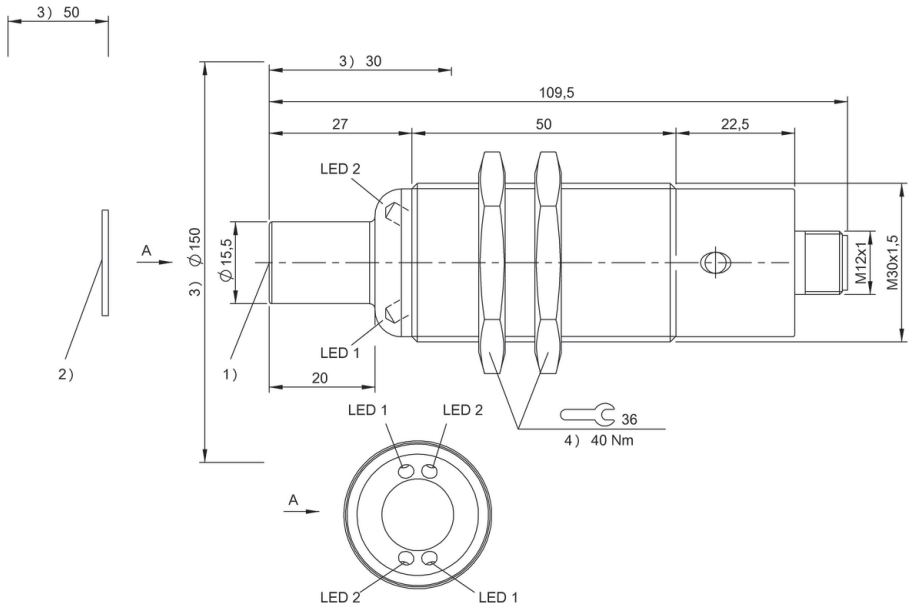

1) Sensing surface, 2) Data carrier, 3) Clear zone, 4) Tightening torque

	BIS0044			BIS0045			BIS0046				BIS00YE		BIS00NU BIS00NW BIS0100	
	>25	>15	>5	>25	>10	>5	>50	>25	>20		>25		>0	
	>80	>50	>50	>80	>50	>50	>150	>90	>70		>100		>100	
	0-15	0-10	0-6	0-20	0-12	0-5	0-28	0-18	0-10		0-24		0-12	
	0-15	0-10	0-6	0-20	0-12	0-5	0-28	0-18	0-10		0-24		0-12	
	±8	±6	±4	±12	±8	±7	±20	±14	±14	0	±14		±7	
	±8	±6	±4	±12	±8	±4	±20	±14	±14	5	±14		±7	
	±6	±5		±10	±6		±18	±14	±10	10	±14		±6	
	±4			±10	±4		±18	±12	±6	12	±12		±2	
	±4			±10			±18	±12		15	±12			
				±7			±16	±10		20	±12			
				±7			±16	±8		24	±6			
				±7			±16			30				
							±12			35				
							±12			40				

Do you need more details? Our Product Finder at www.balluff.com provides you with product-specific information, including technical drawings, data sheets, user guides and more for each individual product. All items are available for download.

IO-Link, 10 bytes process data length	**BIS0155** BIS M-405-045-008-07-S4
Product Group	HF (13.56 MHz)
Dimension	35 x 17 x 80 mm
Installation	metal-free (clear zone)
Antenna type	round
Supported data carrier types	DIN ISO 14443, DIN ISO 15693
Connection	Connector, M12x1 connector, 4-pin, 0.30 m
Housing material	ABS
Interface	IO-Link 1.1
Operating voltage Ub	18...30 VDC Supports only LPS/Class 2
Ambient temperature	0...70 °C
Protection degree	IP67
Approval/Conformity	CE, UL-FILE E227256, Vol.X1, BIS

Use with **IO-Link master** only

Appropriate data carrier on request

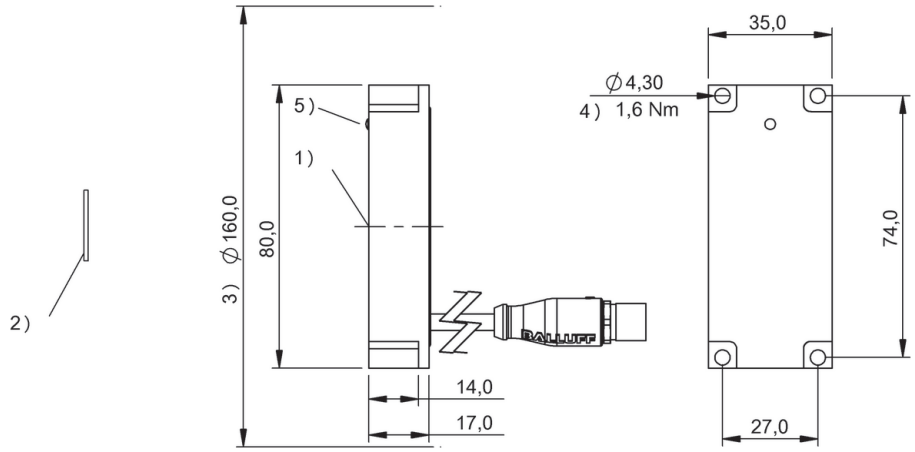

1) Sensing surface, 2) Data carrier, 3) Clear zone, 4) Tightening torque, 5) LED Power

IO-Link, 10 bytes process data length	**BIS014J** BIS M-408-045-001-07-S4
Product Group	HF (13.56 MHz)
Dimension	40 x 15 x 105 mm
Installation	metal-free (clear zone)
Antenna type	round
Supported data carrier types	DIN ISO 14443, DIN ISO 15693
Connection	Connector, M12x1 connector, 4-pin
Housing material	Zinc, die-cast
Interface	IO-Link 1.1
Operating voltage Ub	18...30 VDC Supports only LPS/Class 2
Ambient temperature	0...70 °C
Protection degree	IP67
Approval/Conformity	CE, FCC Part 15, IC RSS-210

Use with **IO-Link master** only

Appropriate data carrier

	BIS0042		BIS004A		BIS0044		BIS0045		BIS0143			BIS00M9 BIS00M8		BIS00NU BIS00NW BIS0100		
Data carrier distance to metal	>10	>0	>10	>0	>25		>25		>25			>0		>0		
Data carrier clear zone	>60	>60	>60	>60	>100		>100		>100			>100		>100		
Working distance for writing	0-13	0-11	0-11	0-9	0-23		0-28		0-26			0-22		0-13		
Working distance for reading	0-13	0-11	0-11	0-9	0-23		0-28		0-26			0-22		0-13		
Offset at distance																
0	±10	±8	±8	±8	±15		±16		±15		0	±13		±10		
4	±10	±8	±8	±8	±15		±16		±15		5	±13		±10		
5	±10	±8	±8	±7	±15		±16		±15		10	±13		±9		
6	±9	±7	±7	±7	±15		±16		±15		13	±11		±5		
7	±9	±7	±7	±6	±15		±16		±15		15	±11				
8	±9	±7	±7	±6	±15		±16		±15		18	±11				
9	±9	±7	±7	±3	±15		±16		±15		20	±7				
10	±7	±4	±4		±15		±16		±15		22	±7				
11	±7	±4	±4		±12		±15		±13		25					
13	±4				±12		±15		±13		28					
15					±12		±15		±13		30					
20					±12		±15		±13		32					
23					±5		±10		±5		35					
25							±10		±5		40					
26							±5		±5		43					
28							±5				45					

Dimensions in mm

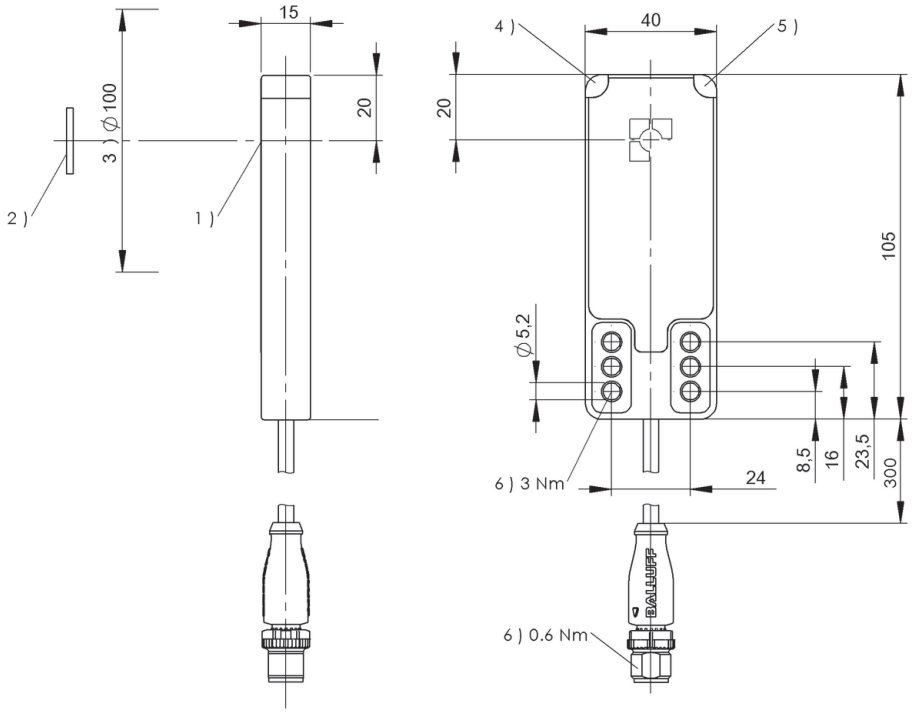

1) Sensing surface, 2) Data carrier, 3) Clear zone, 4) LED (Power), 5) LED (CP), 6) Tightening torque

		BIS00YK		BIS0046		BIS00Y5		BIS00Y4		BIS00LC	
		>10		>25		>50		>50		>25	>0
		>60		>100		>200		>200		>100	>100
		0-13		0-40		0-48		0-48		0-25	0-12
		0-13		0-40		0-48		0-48		0-25	0-12
	0	±9		±25		±26		±30		±15	±10
	5	±9		±25		±26		±30		±15	±10
	10	±8		±25		±26		±30		±15	±8
	12	±4		±25		±26		±30		±13	±2
	13	±4		±25		±26		±30		±13	
	15			±25		±26		±30		±13	
	18			±25		±26		±30		±13	
	20			±25		±26		±30		±13	
	25			±23		±24		±25		±5	
	30			±20		±24		±25			
	36			±20		±24		±25			
	40			±10		±24		±25			
	45					±5		±10			
	48					±5		±10			
	55										
	60										

Do you need more details? Our Product Finder at www.balluff.com provides you with product-specific information, including technical drawings, data sheets, user guides and more for each individual product. All items are available for download.

IO-Link, 10 bytes process data length	**BIS014K** BIS M-458-045-001-07-S4
Product Group	HF (13.56 MHz)
Dimension	40 x 15 x 105 mm
Installation	metal-free (clear zone)
Antenna type	Rod
Supported data carrier types	DIN ISO 14443, DIN ISO 15693
Connection	Connector, M12x1 connector, 4-pin
Housing material	Zinc, die-cast
Interface	IO-Link 1.1
Operating voltage Ub	18...30 VDC Supports only LPS/Class 2
Ambient temperature	0...70 °C
Protection degree	IP67
Approval/Conformity	CE, FCC Part 15, IC RSS-210

Use with **IO-Link master** only

Appropriate data carrier

	BIS004F				BIS004H					BIS00M2		BIS00P3				BIS00NZ	
Data carrier clear zone A	>200	>200	>200	>200	>200	>200	>200	>200		>200	>200	>240	>240	>240	>240	>27	>27
Data carrier clear zone B	>200	>200	>200	>200	>200	>200	>200	>200		>200	>200	>480	>480	>480	>480	>27	>27
Data carrier clear zone C										>50	>50	>50	>50	>0	>0		
Metallic mounting surface 40 × 22 mm	0-38	0-38			0-38	0-38											
Metallic mounting surface > 200 × 200 mm			0-42	0-42			0-34	0-34									
Working distance for writing	0-38	0-38	0-42	0-42	0-38	0-38	0-34	0-34		0-18	0-18	0-54	0-54	0-54	0-54	0-25	0-25
Working distance for reading	0-38	0-38	0-42	0-42	0-38	0-38	0-34	0-34		0-18	0-18	0-54	0-54	0-54	0-54	0-25	0-25
Offset at distance	X	Y	X	Y	X	Y	X	Y		X	Y	X	Y	X	Y	X	Y
0	±43	±18	±45	±21	±20	±40	±17	±35	0	±22	±12	±60	±30	±60	±30	±30	±20
5	±43	±18	±45	±21	±20	±40	±17	±35	5	±22	±12	±60	±30	±60	±30	±30	±20
10	±43	±18	±45	±21	±20	±40	±17	±35	10	±21	±10	±60	±30	±60	±30	±30	±20
15	±40	±17	±43	±20	±18	±35	±15	±33	15	±16	±8	±55	±27	±55	±27	±25	±15
20	±40	±17	±43	±20	±18	±35	±15	±33	16	±5	±2	±55	±27	±55	±27	±15	±10
30	±35	±15	±40	±18	±15	±30	±13	±28	18	±5	±2	±55	±27	±55	±27	±5	±5
34	±18	±5	±24	±12	±5	±10	±5	±10	30			±55	±27	±55	±27		
38	±18	±5	±24	±12	±5	±10			35			±50	±25	±50	±25		
40			±24	±12					40			±50	±25	±50	±25		
42			±15	±8					45			±35	±17	±35	±17		
50									50			±35	±17	±35	±17		
60									54			±15	±7	±15	±7		

Dimensions in mm

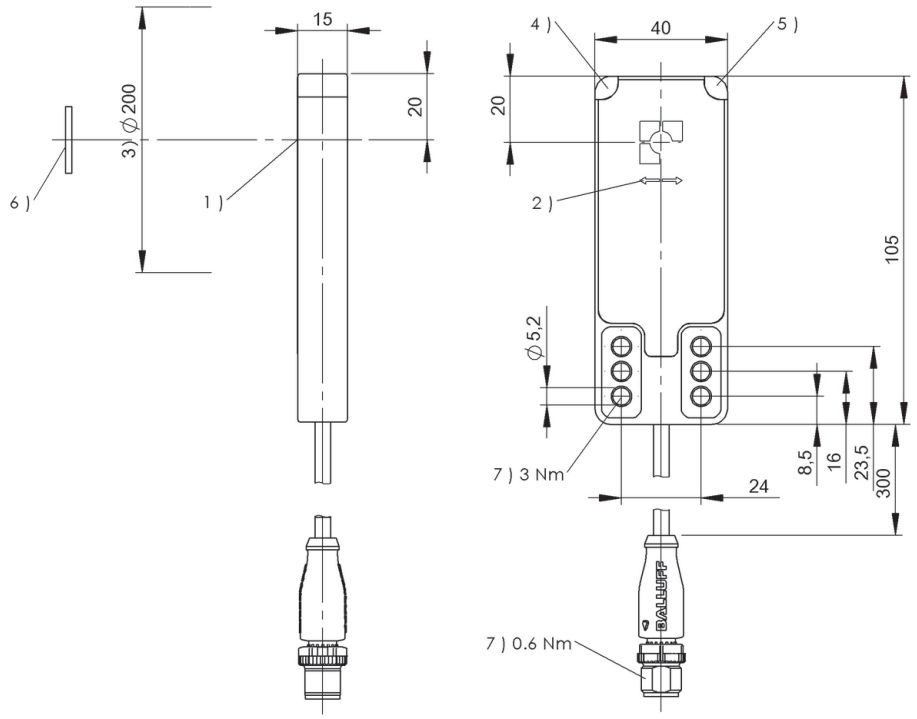

1) Sensing surface, 2) Read/write axis, 3) Clear zone, 4) LED (Power), 5) LED (CP), 6) Data carrier, 7) Tightening torque

Do you need more details? Our Product Finder at www.balluff.com provides you with product-specific information, including technical drawings, data sheets, user guides and more for each individual product. All items are available for download.

IO-Link, 10 bytes process data length	**BIS00LK** BIS M-401-045-001-07-S4
Product Group	HF (13.56 MHz)
Dimension	80 x 40 x 84.5 mm
Installation	metal-free (clear zone)
Antenna type	round
Supported data carrier types	DIN ISO 14443, DIN ISO 15693
Connection	Connector, M12x1 connector, 4-pin
Housing material	PBT
Interface	IO-Link 1.1
Operating voltage Ub	18...30 VDC Supports only LPS/Class 2
Ambient temperature	0...70 °C
Protection degree	IP67
Approval/Conformity	CE, FCC Part 15, IC RSS-210, UL-FILE E227256, Vol.X1, BIS

Use with **IO-Link master** only

Appropriate data carrier

	BIS003Y			BIS003Z			BIS0047		BIS0043		BIS0044		BIS0045		BIS0046		
Data carrier distance to metal	>50	>25	>10	>50	>25	>10	>80		>50	>20	>50	>30	>50	>30	>50	>30	
Data carrier clear zone	>200	>150	>150	>200	>150	>150	>250		>200	>60	>200	>100	>200	>100	>200	>100	
Working distance for writing	0-28	0-25	0-20	0-45	0-40	0-34	0-50		0-40	0-18	0-30	0-18	0-40	0-25	0-60	0-35	
Working distance for reading	0-28	0-25	0-20	0-45	0-40	0-34	0-50		0-40	0-18	0-30	0-18	0-40	0-25	0-60	0-35	
Offset at distance																	
0	±22	±18	±12	±30	±24	±16	±30		±30	±16	±25	±18	±30	±20	±35	±25	
5	±22	±18	±12	±30	±24	±16	±30		±30	±16	±25	±18	±30	±20	±35	±25	
9	±22	±18	±10	±30	±24	±16	±30		±30	±16	±25	±15	±30	±20	±35	±25	
12	±22	±16	±8	±30	±24	±14	±30		±25	±16	±20	±15	±25	±20	±35	±25	
15	±22	±16	±8	±30	±24	±14	±30		±25	±16	±20	±12	±25	±18	±35	±25	
16	±20	±15	±6	±30	±20	±12	±30		±25	±16	±20	±12	±25	±18	±35	±25	
18	±20	±13	±4	±30	±20	±10	±30		±25	±14	±20	±8	±25	±16	±35	±25	
20	±20	±12	±2	±30	±20	±10	±30		±25		±20		±25	±14	±35	±25	
22	±16	±8		±24	±18	±8	±30		±20		±15		±20	±12	±35	±22	
25	±12	±4		±24	±18	±8	±30		±20		±15		±20	±10	±35	±22	
30				±24	±15	±6	±28		±20		±10		±20		±35	±22	
32				±20	±12	±4	±24		±15		±10		±15		±35	±22	
35				±20	±10		±22		±15				±15		±35	±20	
40				±15	±5		±18		±15				±15		±35		
43				±8			±14								±25		
45				±5			±12								±25		
50							±4								±25		
52															±25		
60															±25		

Dimensions in mm

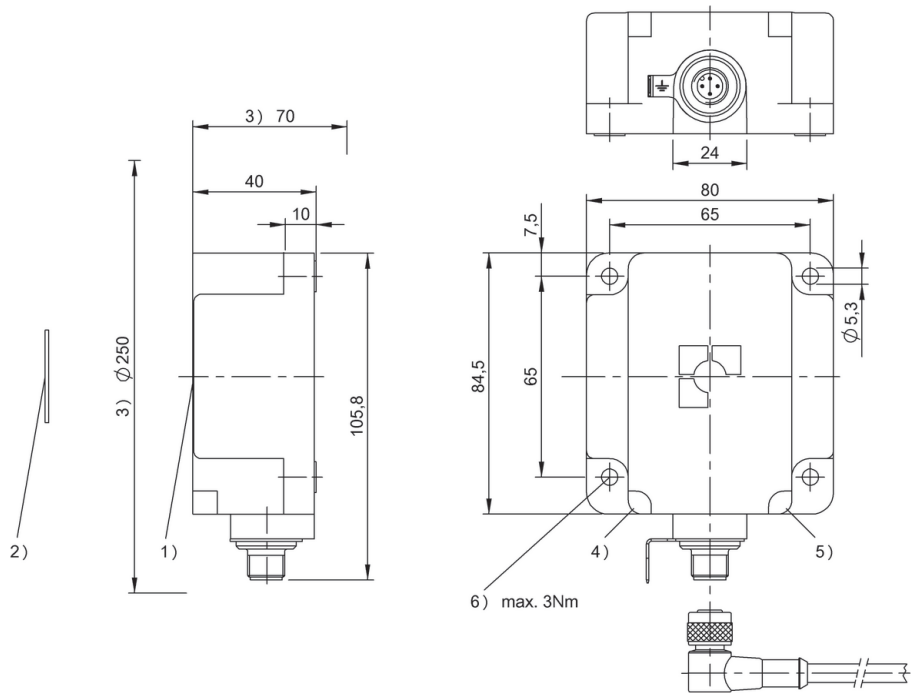

1) Sensing surface, 2) Data carrier, 3) Clear zone, 4) LED (Power), 5) LED (TP), 6) Tightening torque

	BIS00M9 BIS00M8	BIS00NU BIS00NW BIS0100		BIS00YE	BIS00Y4
	>0	>0		>50	>50
	>100	>100		>200	>200
	0-32	0-16		0-50	0-75
	0-32	0-16		0-50	0-75
	±25	±24	0	±30	±50
	±25	±24	5	±30	±50
	±25	±20	10	±30	±50
	±25	±14	15	±30	±50
	±25	±4	20	±30	±50
	±25	±4	25	±28	±50
	±25		30	±28	±50
	±25		35	±28	±50
	±20		40	±28	±50
	±20		45	±10	±45
	±15		50	±10	±45
	±15		55		±45
			60		±45
			65		±35
			70		±35
			75		±35
			80		
			85		
			90		

Do you need more details? Our Product Finder at www.balluff.com provides you with product-specific information, including technical drawings, data sheets, user guides and more for each individual product. All items are available for download.

IO-Link, 32 bytes process data length	**BIS0102** BIS M-401-072-001-07-S4
Product Group	HF (13.56 MHz)
Dimension	80 x 40 x 84.5 mm
Installation	metal-free (clear zone)
Antenna type	round
Supported data carrier types	DIN ISO 14443, DIN ISO 15693
Connection	Connector, M12x1 connector, 4-pin
Housing material	PBT
Interface	IO-Link 1.1
Operating voltage Ub	18...30 VDC Supports only LPS/Class 2
Ambient temperature	0...70 °C
Protection degree	IP67
Approval/Conformity	CE, FCC Part 15, IC RSS-210, UL-FILE E227256, Vol.X1, BIS

Use with **IO-Link master** only

Appropriate data carrier

	BIS003Y			BIS003Z			BIS0047		BIS0043		BIS0044		BIS0045		BIS0046	
Data carrier distance to metal	>50	>25	>10	>50	>25	>10	>80		>50	>20	>50	>30	>50	>30	>50	>30
Data carrier clear zone	>200	>150	>150	>200	>150	>150	>250		>200	>60	>200	>100	>200	>100	>200	>100
Working distance for writing	0-28	0-25	0-20	0-45	0-40	0-34	0-50		0-40	0-18	0-30	0-18	0-40	0-25	0-60	0-35
Working distance for reading	0-28	0-25	0-20	0-45	0-40	0-34	0-50		0-40	0-18	0-30	0-18	0-40	0-25	0-60	0-35
Offset at distance																
0	±22	±18	±12	±30	±24	±16	±30		±30	±16	±25	±18	±30	±20	±35	±25
5	±22	±18	±12	±30	±24	±16	±30		±30	±16	±25	±18	±30	±20	±35	±25
9	±22	±18	±10	±30	±24	±16	±30		±30	±16	±25	±15	±30	±20	±35	±25
12	±22	±16	±8	±30	±24	±14	±30		±25	±16	±20	±15	±25	±20	±35	±25
15	±22	±16	±8	±30	±24	±14	±30		±25	±16	±20	±12	±25	±18	±35	±25
16	±20	±15	±6	±30	±20	±12	±30		±25	±16	±20	±12	±25	±18	±35	±25
18	±20	±13	±4	±30	±20	±10	±30		±25	±14	±20	±8	±25	±16	±35	±25
20	±20	±12	±2	±30	±20	±10	±30		±25		±20		±25	±14	±35	±25
22	±16	±8		±24	±18	±8	±30		±20		±15		±20	±12	±35	±22
25	±12	±4		±24	±18	±8	±30		±20		±15		±20	±10	±35	±22
30				±24	±15	±6	±28		±20		±10		±20		±35	±22
32				±20	±12	±4	±24		±15		±10		±15		±35	±22
35				±20	±10		±22		±15				±15		±35	±20
40				±15	±5		±18		±15				±15		±35	
43				±8			±14								±25	
45				±5			±12								±25	
50							±4								±25	
52															±25	
60															±25	

Dimensions in mm

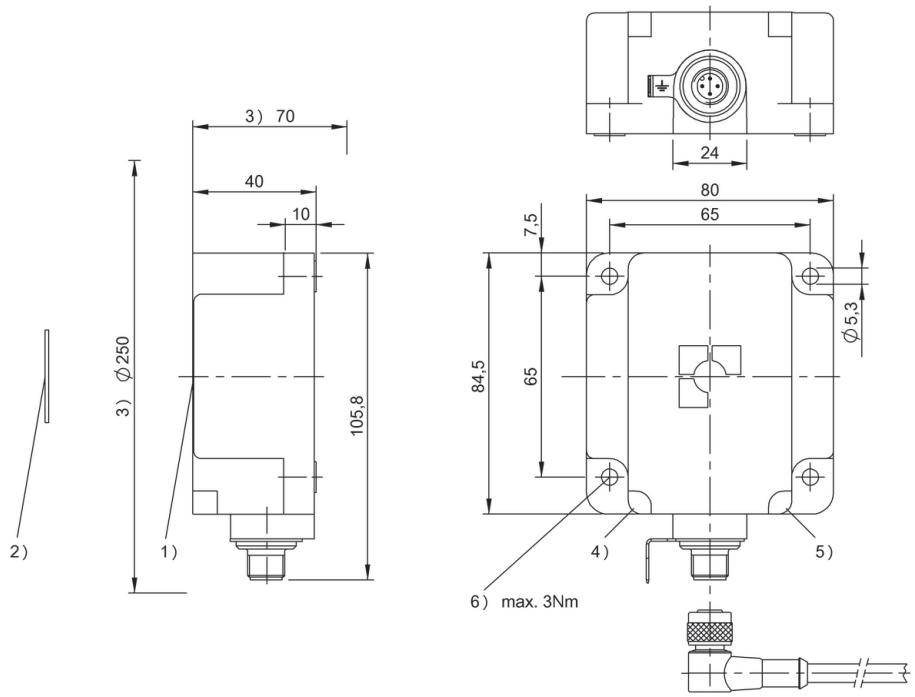

1) Sensing surface, 2) Data carrier, 3) Clear zone, 4) LED (Power), 5) LED (TP), 6) Tightening torque

	BIS00M9 BIS00M8	BIS00NU BIS00NW BIS0100		BIS00YE	BIS00Y4
	>0	>0		>50	>50
	>100	>100		>200	>200
	0-32	0-16		0-50	0-75
	0-32	0-16		0-50	0-75
	±25	±24	0	±30	±50
	±25	±24	5	±30	±50
	±25	±20	10	±30	±50
	±25	±14	15	±30	±50
	±25	±4	20	±30	±50
	±25	±4	25	±28	±50
	±25		30	±28	±50
	±25		35	±28	±50
	±20		40	±28	±50
	±20		45	±10	±45
	±15		50	±10	±45
	±15		55		±45
			60		±45
			65		±35
			70		±35
			75		±35
			80		
			85		
			90		

Do you need more details? Our Product Finder at www.balluff.com provides you with product-specific information, including technical drawings, data sheets, user guides and more for each individual product. All items are available for download.

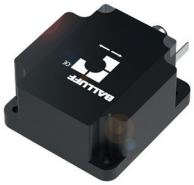

IO-Link, 10 bytes process data length	**BIS00LM** BIS M-451-045-001-07-S4
Product Group	HF (13.56 MHz)
Dimension	80 x 40 x 84.5 mm
Installation	metal-free (clear zone)
Antenna type	Rod
Supported data carrier types	DIN ISO 14443, DIN ISO 15693
Connection	Connector, M12x1 connector, 4-pin
Housing material	PBT
Interface	IO-Link 1.1
Operating voltage Ub	18...30 VDC Supports only LPS/Class 2
Ambient temperature	0...70 °C
Protection degree	IP67
Approval/Conformity	CE, FCC Part 15, IC RSS-210, UL-FILE E227256, Vol.X1, BIS

Use with **IO-Link master** only

Appropriate data carrier

	BIS004F				BIS004H					BIS00M2				BIS00P3	
Data carrier clear zone A	>200	>200	>200	>200	>200	>200	>200	>200		>200	>200	>10	>10	>240	>240
Data carrier clear zone B	>200	>200	>200	>200	>200	>200	>200	>200		>200	>200	>50	>50	>480	>480
Data carrier clear zone C										>50	>50	>2	>2	>50	>50
Metallic mounting surface 40 × 22 mm	0-52	0-52			0-52	0-52									
Metallic mounting surface > 200 × 200 mm			0-65	0-65			0-65	0-65							
Working distance for writing	0-52	0-52	0-65	0-65	0-52	0-52	0-65	0-65		0-30	0-30	15-30	15-30	0-100	0-100
Working distance for reading	0-52	0-52	0-65	0-65	0-52	0-52	0-65	0-65		0-30	0-30	15-30	15-30	0-100	0-100
Offset at distance	X	Y	X	Y	X	Y	X	Y		X	Y	X	Y	X	Y
0	±60	±25	±65	±26	±25	±60	±26	±65	0	±35	±20			±60	±20
5	±60	±25	±65	±26	±25	±60	±26	±65	5	±35	±20			±60	±20
12	±60	±25	±65	±25	±25	±60	±25	±65	10	±35	±20			±60	±20
15	±60	±25	±65	±25	±25	±60	±25	±65	15	±35	±20	±35	±15	±60	±20
18	±60	±25	±65	±25	±25	±60	±25	±65	20	±35	±20	±35	±15	±60	±20
20	±60	±25	±65	±25	±25	±60	±25	±65	25	±20	±12	±28	±15	±60	±20
22	±60	±25	±65	±25	±25	±60	±25	±65	30	±20	±12	±28	±15	±60	±20
25	±60	±25	±65	±25	±25	±60	±25	±65	35					±60	±20
30	±60	±25	±65	±25	±25	±60	±25	±65	40					±60	±20
32	±50	±25	±65	±25	±25	±50	±25	±65	45					±60	±20
35	±50	±25	±65	±25	±25	±50	±25	±65	50					±60	±20
40	±50	±20	±50	±25	±20	±50	±25	±50	60					±60	±20
45	±25	±20	±50	±25	±20	±25	±25	±50	70					±60	±20
50	±25	±20	±50	±25	±20	±25	±25	±50	80					±60	±20
52	±25	±8	±25	±25	±8	±25	±25	±25	90					±40	±20
60			±25	±10			±10	±25	100					±40	±20
65			±25	±10			±10	±25							

Dimensions in mm

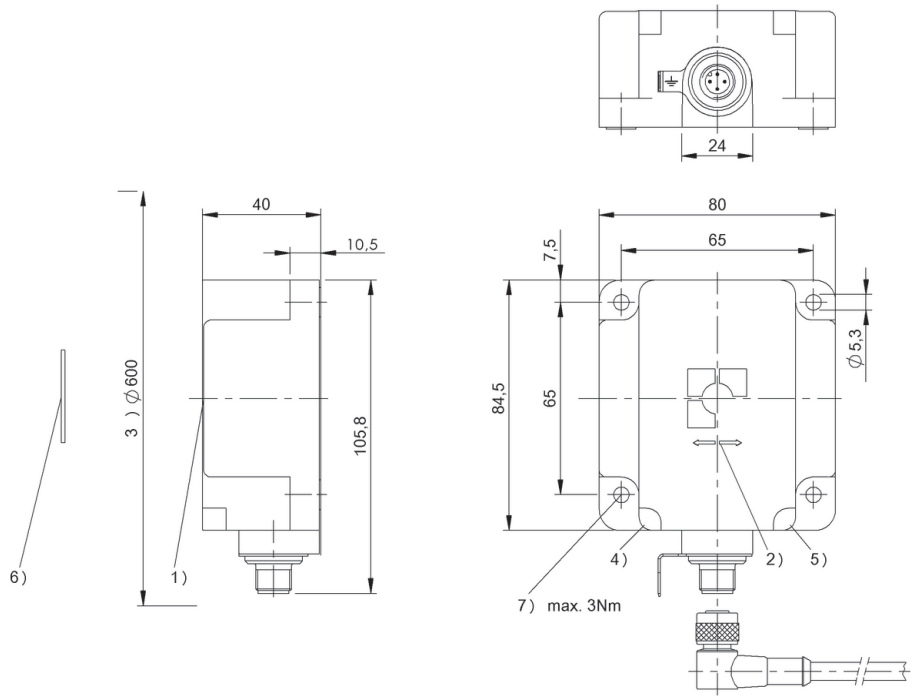

1) Sensing surface, 2) Read/write axis, 3) Clear zone, 4) LED (Power), 5) LED (TP), 6) Data carrier on steel, 7) Tightening torque

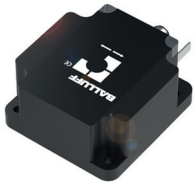

IO-Link, 32 bytes process data length	**BIS0103** BIS M-451-072-001-07-S4
Product Group	HF (13.56 MHz)
Dimension	80 x 40 x 84.5 mm
Installation	metal-free (clear zone)
Antenna type	Rod
Supported data carrier types	DIN ISO 14443, DIN ISO 15693
Connection	Connector, M12x1 connector, 4-pin
Housing material	PBT
Interface	IO-Link 1.1
Operating voltage Ub	18...30 VDC Supports only LPS/Class 2
Ambient temperature	0...70 °C
Protection degree	IP67
Approval/Conformity	CE, FCC Part 15, IC RSS-210, UL-FILE E227256, Vol.X1, BIS

Use with **IO-Link master** only

Appropriate data carrier

	BIS004F				BIS004H					BIS00M2				BIS00P3	
Data carrier clear zone A	>200	>200	>200	>200	>200	>200	>200	>200		>200	>200	>10	>10	>240	>240
Data carrier clear zone B	>200	>200	>200	>200	>200	>200	>200	>200		>200	>200	>50	>50	>480	>480
Data carrier clear zone C										>50	>50	>2	>2	>50	>50
Metallic mounting surface 40 × 22 mm	0-52	0-52			0-52	0-52									
Metallic mounting surface > 200 × 200 mm			0-65	0-65			0-65	0-65							
Working distance for writing	0-52	0-52	0-65	0-65	0-52	0-52	0-65	0-65		0-30	0-30	15-30	15-30	0-100	0-100
Working distance for reading	0-52	0-52	0-65	0-65	0-52	0-52	0-65	0-65		0-30	0-30	15-30	15-30	0-100	0-100
Offset at distance	X	Y	X	Y	X	Y	X	Y		X	Y	X	Y	X	Y
0	±60	±25	±65	±26	±25	±60	±26	±65	0	±35	±20			±60	±20
5	±60	±25	±65	±26	±25	±60	±26	±65	5	±35	±20			±60	±20
12	±60	±25	±65	±25	±25	±60	±25	±65	10	±35	±20			±60	±20
15	±60	±25	±65	±25	±25	±60	±25	±65	15	±35	±20	±35	±15	±60	±20
18	±60	±25	±65	±25	±25	±60	±25	±65	20	±35	±20	±35	±15	±60	±20
20	±60	±25	±65	±25	±25	±60	±25	±65	25	±20	±12	±28	±15	±60	±20
22	±60	±25	±65	±25	±25	±60	±25	±65	30	±20	±12	±28	±15	±60	±20
25	±60	±25	±65	±25	±25	±60	±25	±65	35					±60	±20
30	±60	±25	±65	±25	±25	±60	±25	±65	40					±60	±20
32	±50	±25	±65	±25	±25	±50	±25	±65	45					±60	±20
35	±50	±25	±65	±25	±25	±50	±25	±65	50					±60	±20
40	±50	±20	±50	±25	±20	±50	±25	±50	60					±60	±20
45	±25	±20	±50	±25	±20	±25	±25	±50	70					±60	±20
50	±25	±20	±50	±25	±20	±25	±25	±50	80					±60	±20
52	±25	±8	±25	±25	±8	±25	±25	±25	90					±40	±20
60			±25	±10			±10	±25	100					±40	±20
65			±25	±10			±10	±25							

Dimensions in mm

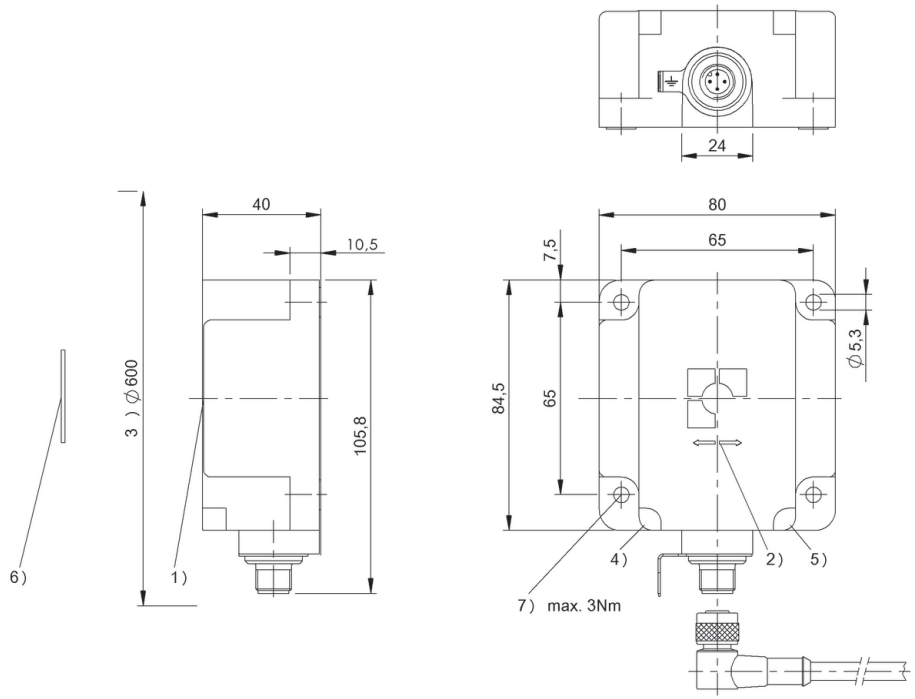

1) Sensing surface, 2) Read/write axis, 3) Clear zone, 4) LED (Power), 5) LED (TP), 6) Data carrier on steel, 7) Tightening torque

IO-Link, 10 bytes process data length	**BIS00M1** BIS M-402-045-004-07-S4
Product Group	HF (13.56 MHz)
Dimension	25 x 10 x 50 mm
Installation	metal-free (clear zone)
Antenna type	round
Supported data carrier types	DIN ISO 14443, DIN ISO 15693
Connection	Connector, M12x1 connector, 4-pin, 0.50 m, PU
Housing material	ABS, GF16, interface aluminum
Interface	IO-Link 1.1
Operating voltage Ub	18...30 VDC Supports only LPS/Class 2
Ambient temperature	0...70 °C
Protection degree	IP67
Approval/Conformity	CE, UL-FILE E227256, Vol.X1, BIS

Use with **IO-Link master** only

Appropriate data carrier

	BIS0040		BIS0042		BIS0044		BIS0048		BIS004A			BIS00NU BIS00NW BIS0100		BIS003Y	
Data carrier distance to metal	>10	>0	>10	>0	>25		>10	>0	>10	>0		>0		>25	
Data carrier clear zone	>60	>0	>60	>0	>80		>60	>0	>60	>0		>100		>100	
Working distance for writing	0-6	0-4	0-8	0-6	0-15		0-5	0-4	0-8	0-5		0-9		0-15	
Working distance for reading	0-6	0-4	0-8	0-6	0-15		0-5	0-4	0-8	0-5		0-9		0-15	
Offset at distance															
0	±4	±3	±5	±4	±8		±4	±3	±4	±4	0	±6		±11	
5	±2		±5	±2	±8		±2		±4	±2	5	±6		±11	
9					±6						7	±6		±9	
12					±4						9	±4		±9	
15					±4						12			±9	
16											15			±5	

Dimensions in mm

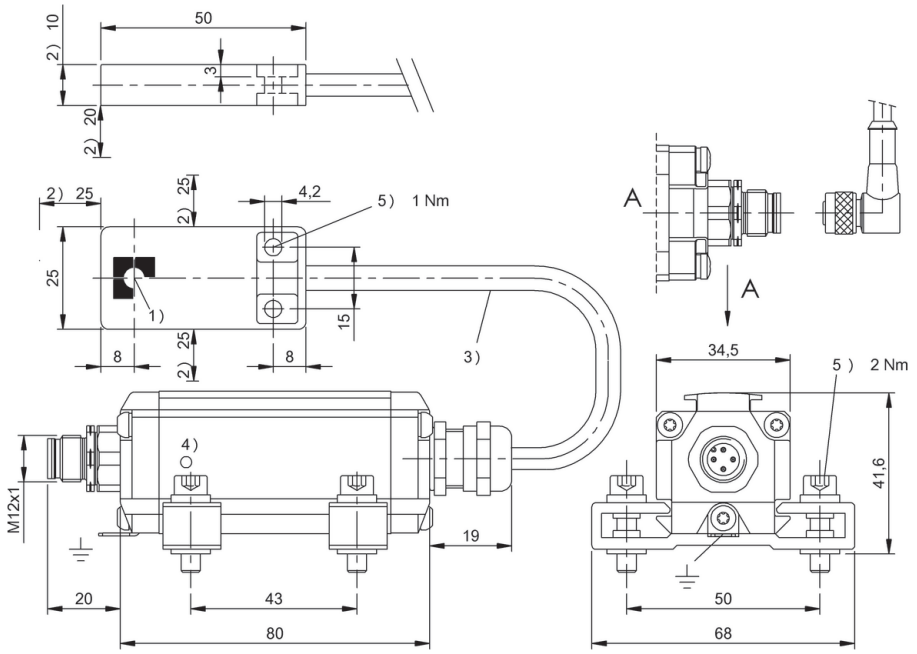

1) Sensing surface, 2) Clear zone, 3) Cable length see text, 4) LED function indicator, 5) Tightening torque

Do you need more details? Our Product Finder at www.balluff.com provides you with product-specific information, including technical drawings, data sheets, user guides and more for each individual product. All items are available for download.

IO-Link, 10 bytes process data length	**BIS0126** BIS M-402-045-007-07-S4
Product Group	HF (13.56 MHz)
Dimension	25 x 10 x 50 mm
Installation	metal-free (clear zone)
Antenna type	Rod
Supported data carrier types	DIN ISO 14443, DIN ISO 15693
Connection	Connector, M12x1 connector, 4-pin, 0.50 m, PU
Housing material	ABS, GF16, interface aluminum
Interface	IO-Link 1.1
Operating voltage Ub	18...30 VDC Supports only LPS/Class 2
Ambient temperature	0...70 °C
Protection degree	IP67
Approval/Conformity	CE, UL-FILE E227256, Vol.X1, BIS

Use with **IO-Link master** only

Appropriate data carrier

	BIS00UC BIS00UE
Data carrier distance to metal	>10
Data carrier clear zone	>60
Working distance for writing	0-3
Working distance for reading	0-3
Offset at distance	
0	±5
1	±5
2	±5
3	±2
15	
16	

Dimensions in mm

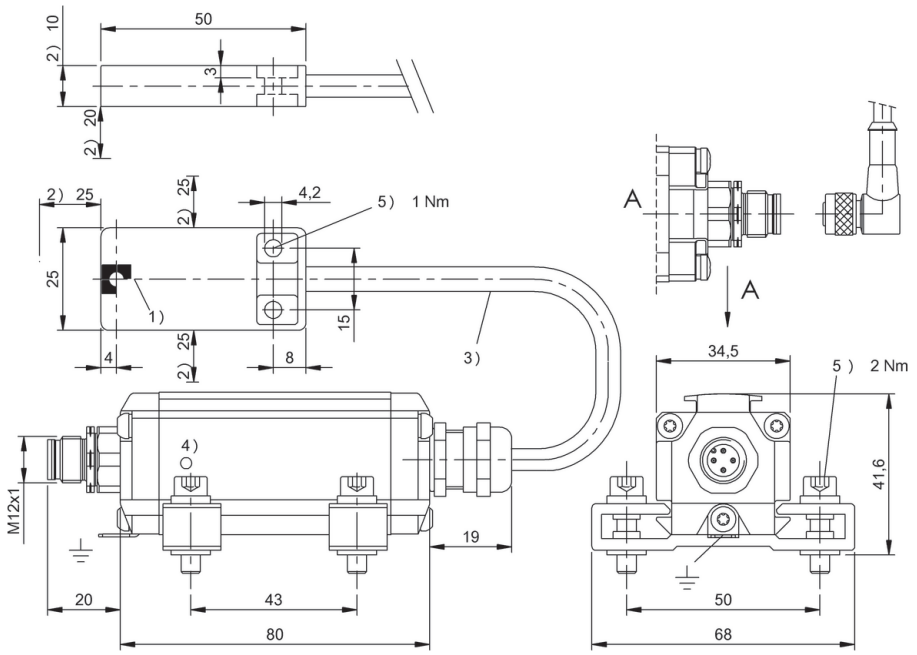

1) Sensing surface, 2) Clear zone, 3) Cable length see text, 4) LED function indicator, 5) Tightening torque

IO-Link, 32 bytes process data length	**BIS0106** BIS M-402-072-004-07-S4
Product Group	HF (13.56 MHz)
Dimension	25 x 10 x 50 mm
Installation	metal-free (clear zone)
Antenna type	round
Supported data carrier types	DIN ISO 14443, DIN ISO 15693
Connection	Connector, M12x1 connector, 4-pin, 0.50 m, PU
Housing material	ABS, GF16, interface aluminum
Interface	IO-Link
Operating voltage Ub	18...30 VDC Supports only LPS/Class 2
Ambient temperature	0...70 °C
Protection degree	IP67
Approval/Conformity	CE, UL-FILE E227256, Vol.X1, BIS

Use with **IO-Link master** only

Appropriate data carrier

	BIS0040		BIS0042		BIS0044		BIS0048		BIS004A			BIS00NU BIS00NW BIS0100		BIS003Y	
Data carrier distance to metal	>10	>0	>10	>0	>25		>10	>0	>10	>0		>0		>25	
Data carrier clear zone	>60	>0	>60	>0	>80		>60	>0	>60	>0		>100		>100	
Working distance for writing	0-6	0-4	0-8	0-6	0-15		0-5	0-4	0-8	0-5		0-9		0-15	
Working distance for reading	0-6	0-4	0-8	0-6	0-15		0-5	0-4	0-8	0-5		0-9		0-15	
Offset at distance															
0	±4	±3	±5	±4	±8		±4	±3	±4	±4	0	±6		±11	
5	±2		±5	±2	±8		±2		±4	±2	5	±6		±11	
9					±6						7	±6		±9	
12					±4						9	±4		±9	
15					±4						12			±9	
16											15			±5	

Dimensions in mm

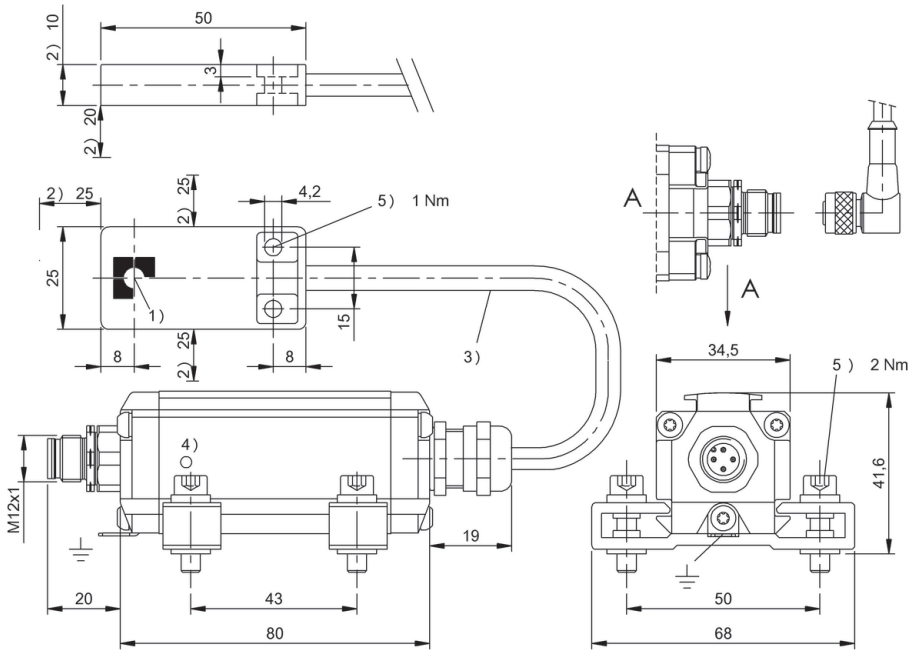

1) Sensing surface, 2) Clear zone, 3) Cable length see text, 4) LED function indicator, 5) Tightening torque

Do you need more details? Our Product Finder at www.balluff.com provides you with product-specific information, including technical drawings, data sheets, user guides and more for each individual product. All items are available for download.

IO-Link, 10 bytes process data length	**BIS00LW** BIS M-402-045-002-07-S4
Product Group	HF (13.56 MHz)
Dimension	Ø 18 x 45.5 mm
Installation	metal-free (clear zone)
Antenna type	round
Supported data carrier types	DIN ISO 14443, DIN ISO 15693
Connection	Connector, M12x1 connector, 4-pin, 0.50 m, PU
Housing material	Brass, interface aluminum
Interface	IO-Link 1.1
Operating voltage Ub	18...30 VDC Supports only LPS/Class 2
Ambient temperature	0...70 °C
Protection degree	IP67
Approval/Conformity	CE, UL-FILE E227256, Vol.X1, BIS

Use with **IO-Link master** only

Appropriate data carrier

	BIS0040		BIS0042		BIS0048		BIS004A		BIS0044			BIS003Y		BIS0045		
Data carrier distance to metal	>10	>0	>10	>0	>10	>0	>10	>0	>25			>25		>25		
Data carrier clear zone	>60	>0	>60	>0	>60	>0	>60	>0	>80			>100		>100		
Working distance for writing	0-6	0-4	0-8	0-6	0-5	0-4	0-8	0-5	0-15			0-14		0-18		
Working distance for reading	0-6	0-4	0-8	0-6	0-5	0-4	0-8	0-5	0-15			0-14		0-18		
Offset at distance																
0	±3	±3	±4	±3	±3	±2	±4	±3	±7		0	±10		±12		
5	±2		±3	±2	±2		±3	±2	±7		5	±10		±12		
9									±5		10	±9		±11		
12									±3		14	±5		±10		
15									±3		15			±10		
16											18			±5		

Dimensions in mm

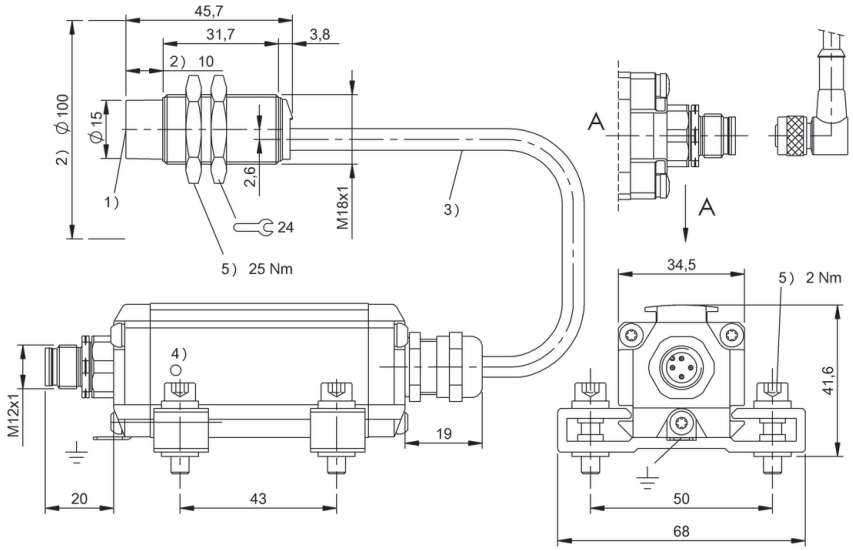

1) Sensing surface, 2) Clear zone, 3) Cable length see text, 4) LED function indicator, 5) Tightening torque

	BIS00YL	BIS00YK	BIS00YE	BIS00NU BIS00NW BIS0100
	>25	>25	>25	>0
	>100	>100	>100	>100
	0-9	0-9	0-20	0-9
	0-9	0-9	0-20	0-9
	±6	±6	±12	±6
	±6	±6	±12	±6
	±5	±5	±12	±6
	±1	±1	±12	±4
			±12	
			±10	

Do you need more details? Our Product Finder at www.balluff.com provides you with product-specific information, including technical drawings, data sheets, user guides and more for each individual product. All items are available for download.

IO-Link, 32 bytes process data length	**BIS0105** BIS M-402-072-002-07-S4
Product Group	HF (13.56 MHz)
Dimension	Ø 18 x 45.5 mm
Installation	metal-free (clear zone)
Antenna type	round
Supported data carrier types	DIN ISO 14443, DIN ISO 15693
Connection	Connector, M12x1 connector, 4-pin, 0.50 m, PU
Housing material	Brass, interface aluminum
Interface	IO-Link
Operating voltage Ub	18...30 VDC Supports only LPS/Class 2
Ambient temperature	0...70 °C
Protection degree	IP67
Approval/Conformity	CE, UL-FILE E227256, Vol.X1, BIS

Use with **IO-Link master** only

Appropriate data carrier

	BIS0040		BIS0042		BIS0048		BIS004A		BIS0044			BIS003Y		BIS0045		
Data carrier distance to metal	>10	>0	>10	>0	>10	>0	>10	>0	>25			>25		>25		
Data carrier clear zone	>60	>0	>60	>0	>60	>0	>60	>0	>80			>100		>100		
Working distance for writing	0-6	0-4	0-8	0-6	0-5	0-4	0-8	0-5	0-15			0-14		0-18		
Working distance for reading	0-6	0-4	0-8	0-6	0-5	0-4	0-8	0-5	0-15			0-14		0-18		
Offset at distance																
0	±3	±3	±4	±3	±3	±2	±4	±3	±7		0	±10		±12		
5	±2		±3	±2	±2		±3	±2	±7		5	±10		±12		
9									±5		10	±9		±11		
12									±3		14	±5		±10		
15									±3		15			±10		
16											18			±5		

Dimensions in mm

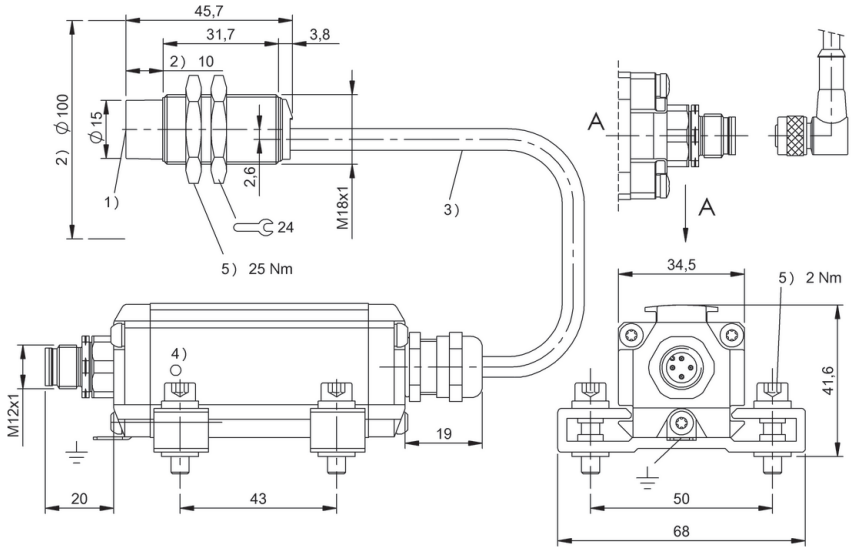

1) Sensing surface, 2) Clear zone, 3) Cable length see text, 4) LED function indicator, 5) Tightening torque

	BIS00YL	BIS00YK	BIS00YE	BIS00NU BIS00NW BIS0100
	>25	>25	>25	>0
	>100	>100	>100	>100
	0-9	0-9	0-20	0-9
	0-9	0-9	0-20	0-9
	±6	±6	±12	±6
	±6	±6	±12	±6
	±5	±5	±12	±6
	±1	±1	±12	±4
			±12	
			±10	

IO-Link, 10 Byte process data length	**BIS01E5** BIS M-4A3-082-401-07-S4
Product Group	HF (13.56 MHz)
Antenna type	round
Supported data carrier types	DIN ISO 15693, DIN ISO 15693 (High Memory)
Process data IN	10 bytes
Process data OUT	10 bytes
IP rating	IP67
Approval/Conformity	CE, FCC Part 15, IC RSS-210, WEEE, EAC, cULus

Appropriate data carrier

		BIS00UC			BIS018Y			BIS01A1		
Data carrier distance to metal		>20	>0	>0	>20	>0	>0	>20	>0	>0
Data carrier clear zone		>100	>100	>0	>100	>100	>0	>100	>100	>0
Working distance for writing		0-5,5	0-3,5	0-2,5	0-4	0-3,5	0-2	0-5	0-4	
Working distance for reading		0-5,5	0-3,5	0-2,5	0-4	0-3,5	0-2	0-5	0-4	
Offset at distance										
	0	±3,5	±2,5	±2	±2,5	±2,5	±2	±3	±3	
	2	±3,5	±2,5	±2	±2,5	±2,5	±1,5	±3	±3	
	3	±3,5	±2,5	±1,5	±2	±2		±3	±2,5	
	3,5	±3,5	±2,5		±2	±2		±3	±2,5	
	4	±3	±2		±1,5			±3	±2	
	4,5	±3						±2		
	5,5	±2,5								

Dimensions in mm

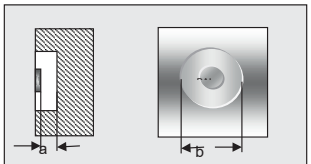

Einbauhinweis Datenträger
Installation note for data carriers

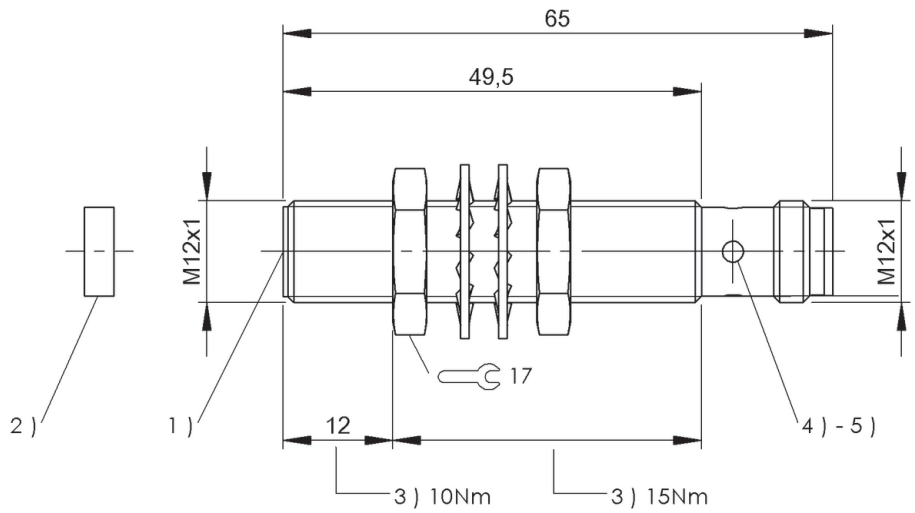

1) LED 4x on circumference, 2) Power/Status, 3) Tightening torque, 4) Sensing surface

IO-Link, 10 Byte process data length	**BIS01E6** BIS M-4A6-082-401-07-S4
Product Group	HF (13.56 MHz)
Antenna type	round
Supported data carrier types	DIN ISO 15693, DIN ISO 15693 (High Memory)
Process data IN	10 bytes
Process data OUT	10 bytes
IP rating	IP67
Approval/Conformity	CE, FCC Part 15, IC RSS-210, WEEE, EAC, cULus

Appropriate data carrier

		BIS01A1			BIS00YE			BIS0044			BIS00UC		
Data carrier distance to metal		>20	>0	>0	>20	>0	>0	>20	>0	>0	>20	>0	>0
Data carrier clear zone		>100	>100	>0	>100	>100	>0	>100	>100	>0	>100	>100	>0
Working distance for writing		0-7	0-7,5		0-16			0-17			0-9	0-5,5	0-4
Working distance for reading		0-7	0-7,5		0-16			0-17			0-9	0-5,5	0-4
Offset at distance													
	0	±5	±5		±10			±9			±5	±3	±3,5
	2	±5	±5		±10			±9			±5	±3	±3,5
	3	±5	±5		±10			±9			±5	±3	±3
	4	±5	±5		±10			±9			±5	±2,5	±2,5
	4,5	±5	±5		±10			±9			±5	±2,5	
	5	±4,5	±4,5		±10			±9			±4,5	±2,5	
	5,5	±4,5	±4,5		±10			±9			±4,5	±2	
	6	±4	±4,5		±10			±9			±4,5		
	6,5	±3,5	±4,5		±10			±9			±4,5		
	7		±4		±10			±9			±4,5		
	7,5		±3,5		±10			±9			±4,5		
	9				±10			±9			±3,5		
	10				±9,5			±8,5					
	16				±7,5			±7					

Dimensions in mm

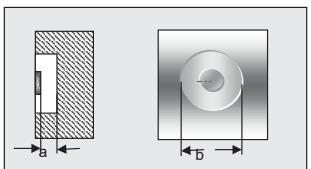

Einbauhinweis Datenträger
Installation note for data carriers

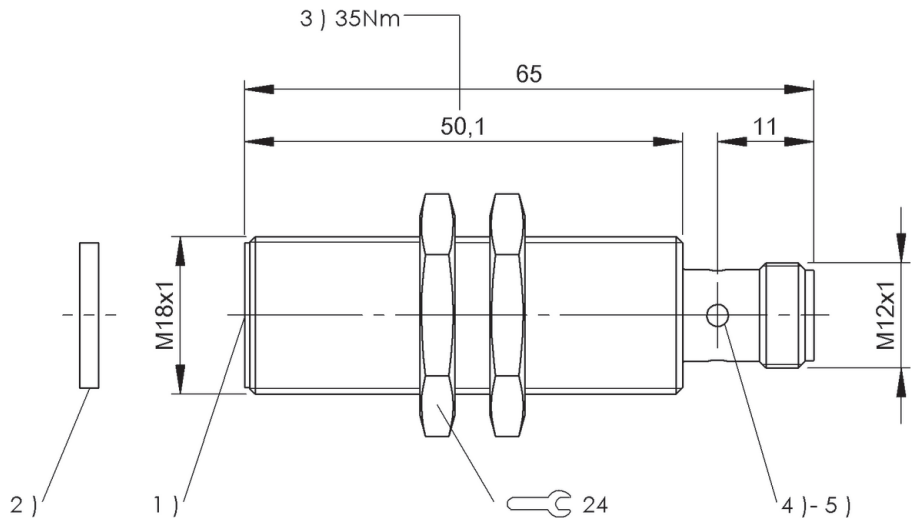

1) LED 4x on circumference, 2) Power/Status, 3) Tightening torque, 4) Sensing surface

Do you need more details? Our Product Finder at www.balluff.com provides you with product-specific information, including technical drawings, data sheets, user guides and more for each individual product. All items are available for download.

IO-Link, 10 Byte process data length	**BIS01E7** BIS M-4A7-082-401-07-S4
Product Group	HF (13.56 MHz)
Antenna type	round
Supported data carrier types	DIN ISO 15693, DIN ISO 15693 (High Memory)
Process data IN	10 bytes
Process data OUT	10 bytes
IP rating	IP67
Approval/Conformity	CE, FCC Part 15, IC RSS-210, WEEE, EAC, cULus

Appropriate data carrier

		BIS01CA			BIS00YE			BIS0044			BIS0045		
Data carrier distance to metal		>20	>0	>0	>20	>0	>0	>20	>0	>0	>20	>0	>0
Data carrier clear zone		>100	>100	>0	>100	>100	>0	>100	>100	>0	>100	>100	>0
Working distance for writing		0-11,5	0-10		0-30			0-28			0-36		
Working distance for reading		0-11,5	0-10		0-30			0-28			0-36		
Offset at distance													
	0	±8	±7		±16						±18		
	2	±8	±7		±16			±15			±18		
	3,5	±8	±7		±16			±15			±18		
	4	±8	±7		±16			±15			±18		
	4,5	±8	±7		±16			±15			±18		
	5	±8	±7		±16			±15			±18		
	5,5	±8	±7		±16			±15			±18		
	6	±8	±7		±16			±15			±18		
	6,5	±8	±7		±16			±15			±18		
	7	±8	±7		±16			±15			±18		
	8	±7,5	±6,5		±16			±15			±18		
	9	±7,5	±6,5		±16			±15			±18		
	10	±7,5	±5,5		±16			±15			±18		
	11	±6			±16			±15			±18		
	20				±15			±14			±18		
	28				±15			±11,5			±18		
	30				±13						±16		
											±14		

Dimensions in mm

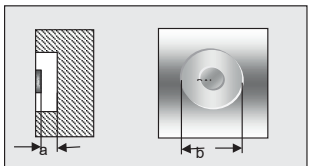

Einbauhinweis Datenträger
Installation note for data carriers

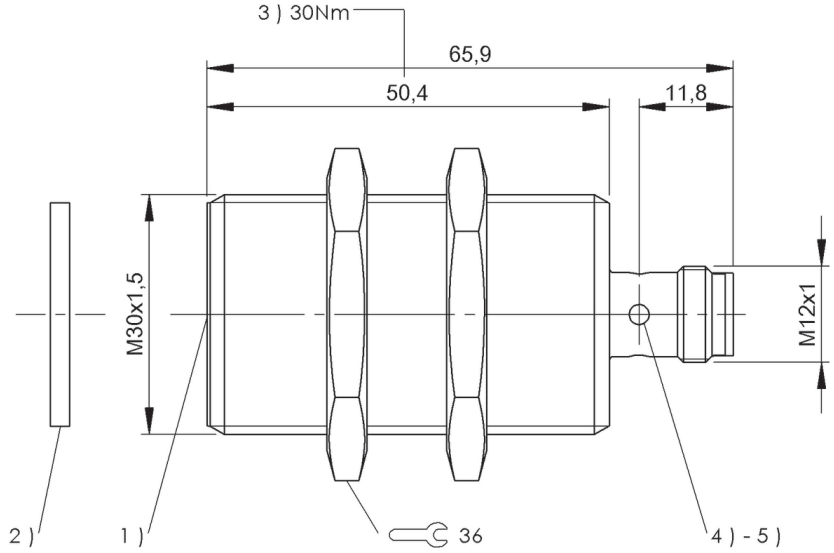

1) LED 4x on circumference, 2) Power/Status, 3) Tightening torque, 4) Sensing surface

Do you need more details? Our Product Finder at www.balluff.com provides you with product-specific information, including technical drawings, data sheets, user guides and more for each individual product. All items are available for download.

IO-Link, 10 Byte process data length	**BIS01E2** BIS M-4A9-082-401-07-PU1-0,3
Product Group	HF (13.56 MHz)
Antenna type	round
Supported data carrier types	DIN ISO 15693, DIN ISO 15693 (High Memory)
Process data IN	10 bytes
Process data OUT	10 bytes
IP rating	IP68, IP69K
Approval/Conformity	CE, FCC Part 15, IC RSS-210, WEEE, Ecolab

Appropriate data carrier

		BIS01CA			BIS00YE			BIS0044			BIS0045		
Data carrier distance to metal		>20	>0	>0	>20	>0	>0	>20	>0	>0	>20	>0	>0
Data carrier clear zone		>100	>100	>0	>100	>100	>0	>100	>100	>0	>100	>100	>0
Working distance for writing		0-9	0-8,5		0-20			0-20			0-26		
Working distance for reading		0-9	0-8,5		0-20			0-20			0-26		
Offset at distance													
	0	±6,5	±6,5		±12			±11			±13		
	2	±6,5	±6,5		±12			±11			±13		
	3,5	±5,5	±5,5		±12			±11			±13		
	4	±5,5	±5,5		±12			±11			±13		
	4,5	±5,5	±5,5		±12			±11			±13		
	5	±5,5	±5,5		±12			±11			±13		
	5,5	±4	±4		±9			±11			±13		
	6	±4	±4		±9			±11			±13		
	6,5	±4	±4		±9			±11			±13		
	7	±4	±4		±9			±11			±13		
	8,5	±4	±3		±9			±11			±13		
	9	±3			±9			±11			±13		
	10				±9			±11			±13		
	11				±9			±9			±12		
	20				±9			±9			±12		
	26										±10		

Dimensions in mm

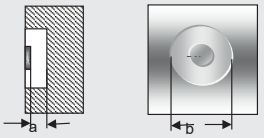

Einbauhinweis Datenträger
Installation note for data carriers

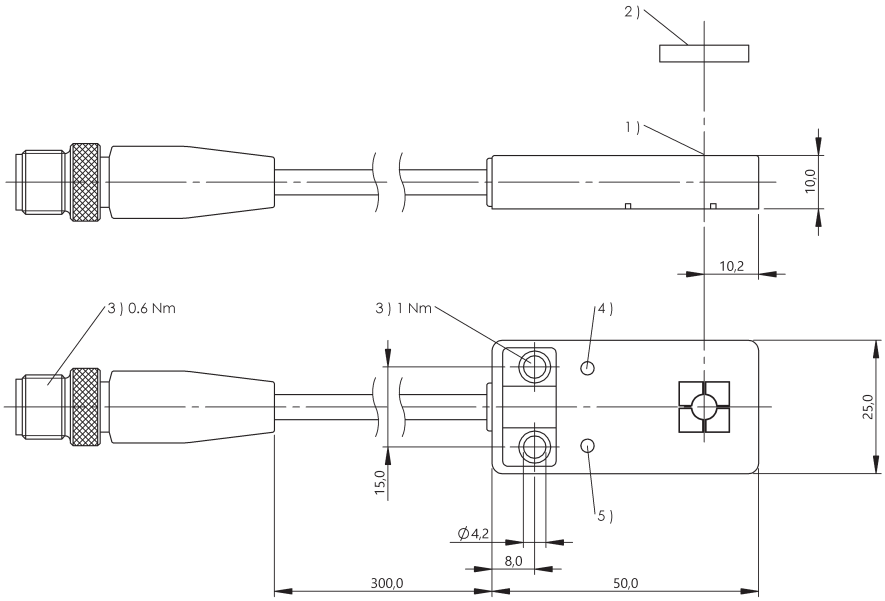

1) Sensing surface, 2) Data carrier, 3) Tightening torque, 4) LED function indicator, 5) LED function indicator

Profinet	**BIS0179** BIS M-4008-048-001-ST4
Product Group	HF (13.56 MHz)
Dimension	80 x 35 x 119 mm
Installation	metal-free (clear zone) on metal flush in metal
Antenna type	round
Supported data carrier types	DIN ISO 15693, DIN ISO 15693 (High Memory)
Connection	2x M12x1-Female, 4-pole, D-coded M12x1-Male, 4-pole, A-coded
Housing material	Zinc, die-cast
Interface	Profinet I/O (IRT), Profinet I/O (IRT) 2 port Switch
Operating voltage Ub	24 V DC LPS Class 2
Ambient temperature	0...70 °C
Protection degree	IP67
Approval/Conformity	CE

Appropriate data carrier

	BIS0043			BIS011F BIS011E BIS011A BIS0139			BIS0045		BIS0046			BIS0119		BIS00NU BIS00NW BIS0100		
Data carrier distance to metal	>50	>0	>0	>50	>0	>0	>50		>50			>0		>0		
Data carrier clear zone	>200	>200	>0	>200	>200	>0	>200		>200			>100		>100		
Working distance for writing	0-52	0-32	10-19	0-36	0-28	11-18	0-52		0-80			0-38		0-18		
Working distance for reading	0-52	0-32	10-19	0-36	0-28	11-18	0-52		0-80			0-38		0-18		
Offset at distance																
0	±32	±25		±27	±22		±32		±42		0	±27		±22		
5	±32	±25		±27	±22		±32		±42		5	±27		±22		
10	±32	±25	±20	±27	±22		±32		±42		10	±27		±20		
11	±32	±22	±20	±25	±20	±18	±32		±42		15	±25		±18		
12	±32	±22	±20	±25	±20	±18	±32		±42		18	±25		±10		
16	±32	±22	±15	±25	±20	±15	±32		±42		20	±25				
17	±32	±22	±15	±25	±20	±2	±32		±42		25	±22				
18	±32	±22	±8	±25	±20	±2	±32		±42		30	±22				
19	±32	±22	±8	±25	±20		±32		±42		35	±10				
20	±32	±22		±25	±20		±32		±42		38	±10				
25	±28	±15		±22	±15		±28		±42		40					
28	±28	±15		±22	±1		±28		±42		45					
30	±28	±15		±22			±28		±42		50					
32	±28	±10		±5			±28		±38		55					
36	±28			±5			±28		±38		60					
40	±28						±28		±38		65					
50	±12						±12		±38		70					
52	±6						±6		±38		75					
65									±38		80					
75									±20		85					
80									±5		90					

Dimensions in mm

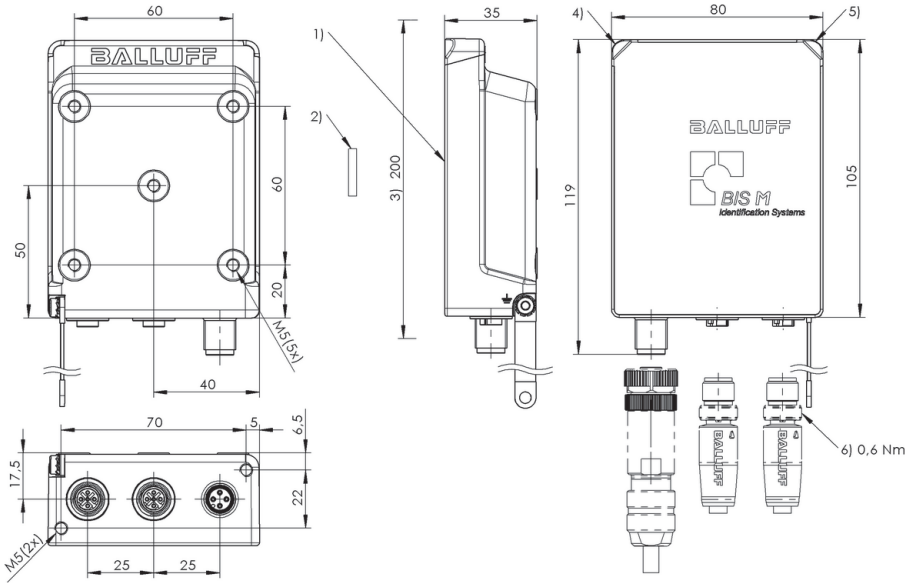

1) Sensing surface, 2) Data carrier, 3) Clear zone, 4) LED (Power), 5) LED (CP), 6) Tightening torque

	BIS00YE	BIS00Y9		BIS00Y4	BIS00Y2
	>50	>50	>0	>50	>50
	>200	>200	>200	>200	>200
	0-60	0-55	0-45	0-90	0-65
	0-60	0-55	0-45	0-90	0-65
0	±35	±32	±27	±50	±36
10	±35	±32	±27	±50	±36
20	±35	±32	±27	±50	±36
30	±30	±30	±25	±50	±33
40	±30	±30	±20	±45	±33
45	±20	±24	±5	±45	±25
50	±20	±24		±45	±25
55	±20	±10		±45	±25
60	±10			±45	±25
65				±30	±10
70				±30	
75				±30	
80				±30	
85				±20	
90				±20	
100					
110					
120					
130					
140					
150					

Do you need more details? Our Product Finder at www.balluff.com provides you with product-specific information, including technical drawings, data sheets, user guides and more for each individual product. All items are available for download.

Profinet	**BIS017A** BIS M-4008-048-002-ST4
Product Group	HF (13.56 MHz)
Dimension	80 x 35 x 119 mm
Installation	metal-free (clear zone) on metal flush in metal
Antenna type	Rod
Supported data carrier types	DIN ISO 15693, DIN ISO 15693 (High Memory)
Connection	2x M12x1-Female, 4-pole, D-coded M12x1-Male, 4-pole, A-coded
Housing material	Zinc, die-cast
Interface	Profinet I/O (IRT), Profinet I/O (IRT) 2 port Switch
Operating voltage Ub	24 V DC LPS Class 2
Ambient temperature	0...70 °C
Protection degree	IP67
Approval/Conformity	CE

Appropriate data carrier

	BIS004F				BIS004H					BIS00M2			BIS00P3				BIS011W BIS011Y BIS011U BIS013E		
Data carrier clear zone A	>200	>200	>200	>200	>200	>200	>200	>200		>200	>200		>240	>240	>240	>240	>240	>240	
Data carrier clear zone B	>200	>200	>200	>200	>200	>200	>200	>200		>200	>200		>480	>480	>480	>480	>480	>480	
Data carrier clear zone C										>50	>50		>50	>50	>0	>0	>50	>50	
Metallic mounting surface 40 × 22 mm	0-65	0-65			0-65	0-65													
Metallic mounting surface > 200 × 200 mm			0-60	0-60			0-45	0-45											
Working distance for writing	0-65	0-65	0-60	0-60	0-65	0-65	0-45	0-45		0-35	0-35		0-100	0-100	0-100	0-100	0-55	0-55	
Working distance for reading	0-65	0-65	0-60	0-60	0-65	0-65	0-45	0-45		0-35	0-35		0-100	0-100	0-100	0-100	0-55	0-55	
Offset at distance																			
Offset at distance	X	Y	X	Y	X	Y	X	Y		X	Y		X	Y	X	Y	X	Y	
0	±70	±30	±65	±30	±30	±70	±25	±50	0	±44	±22	0	±100	±40	±100	±40	±65	±30	
5	±70	±30	±65	±30	±30	±70	±25	±50	5	±44	±22	5	±100	±40	±100	±40	±65	±30	
10	±70	±30	±65	±30	±30	±70	±25	±50	10	±44	±22	10	±100	±40	±100	±40	±65	±30	
15	±70	±30	±65	±30	±30	±70	±25	±50	15	±40	±20	20	±100	±40	±100	±40	±65	±30	
20	±70	±30	±65	±30	±30	±70	±25	±50	20	±40	±20	25	±100	±40	±100	±40	±60	±25	
25	±65	±25	±60	±25	±25	±65	±20	±40	25	±32	±18	30	±100	±40	±100	±40	±60	±25	
30	±65	±25	±60	±25	±25	±65	±20	±40	30	±32	±18	40	±100	±40	±100	±40	±60	±25	
35	±65	±25	±60	±25	±25	±65	±20	±40	35	±10	±3	50	±80	±35	±80	±35	±30	±20	
40	±65	±25	±60	±25	±25	±65	±15	±30	40			55	±80	±35	±80	±35	±20	±10	
45	±40	±20	±40	±20	±20	±40	±5	±5	45			60	±80	±35	±80	±35			
50	±40	±20	±40	±20	±20	±40			50			70	±80	±35	±80	±35			
55	±40	±20	±40	±20	±20	±40			55			75	±80	±35	±80	±35			
60	±40	±20	±20	±10	±20	±40			60			80	±80	±35	±80	±35			
65	±20	±10			±10	±20			80			95	±55	±25	±55	±25			
70									95			100	±30	±10	±30	±10			

Dimensions in mm

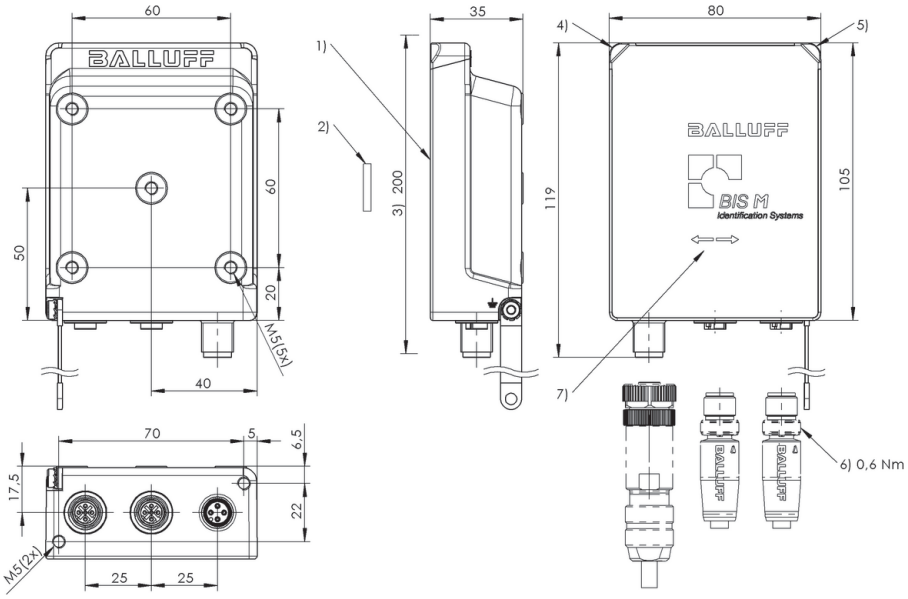

1) Sensing surface, 2) Data carrier, 3) Clear zone, 4) LED (Power), 5) LED (CP), 6) Tightening torque, 7) Read/write axis

	BIS011M BIS011Z BIS011N BIS013C				BIS012J BIS012K BIS012L BIS013F					BIS0117				BIS0112					BIS00NZ			
	>200	>200	>200	>200	>200	>200	>200	>200		>200	>200	>200	>200	>200	>200	>200	>200		>27	>27	>27	>27
	>200	>200	>200	>200	>200	>200	>200	>200		>200	>200	>200	>200	>200	>200	>200	>200		>27	>27	>27	>27
	0-42	0-42			0-42	0-42				0-68	0-68			0-68	0-68						0-30	0-30
			0-42	0-42			0-42	0-42				0-68	0-68			0-58	0-58		0-55	0-55		
	0-42	0-42	0-42	0-42	0-42	0-42	0-42	0-42		0-68	0-68	0-68	0-68	0-68	0-68	0-58	0-58		0-55	0-55	0-30	0-30
	0-42	0-42	0-42	0-42	0-42	0-42	0-42	0-42		0-68	0-68	0-68	0-68	0-68	0-68	0-58	0-58		0-55	0-55	0-30	0-30
	X	Y	X	Y	X	Y	X	Y		X	Y	X	Y	X	Y	X	Y		X	Y	X	Y
0	±45	±25	±45	±25	±25	±45	±45	±25	0	±75	±32	±75	±32	±75	±32	±60	±28	0	±65	±28	±44	±24
5	±45	±25	±45	±25	±25	±45	±45	±25	5	±75	±32	±75	±32	±75	±32	±60	±28	5	±65	±28	±44	±24
10	±45	±25	±45	±25	±25	±45	±45	±25	10	±75	±32	±75	±32	±75	±32	±60	±28	10	±65	±28	±44	±24
15	±45	±25	±45	±25	±25	±45	±45	±25	15	±75	±32	±75	±32	±75	±32	±60	±28	15	±65	±28	±38	±21
20	±45	±25	±45	±25	±25	±45	±45	±25	20	±75	±32	±75	±32	±75	±32	±60	±28	20	±65	±28	±38	±21
25	±30	±18	±30	±18	±18	±30	±30	±18	25	±70	±28	±70	±28	±70	±28	±55	±25	25	±55	±25	±25	±15
30	±30	±18	±30	±18	±18	±30	±30	±18	30	±70	±28	±70	±28	±70	±28	±55	±25	30	±55	±25	±8	±5
35	±30	±18	±30	±18	±18	±30	±30	±18	35	±70	±28	±70	±28	±70	±28	±55	±25	35	±55	±25		
40	±20	±10	±20	±10	±10	±20	±20	±10	40	±70	±28	±70	±28	±70	±28	±55	±25	40	±55	±25		
42	±10	±5	±10	±5	±5	±10	±10	±5	45	±50	±25	±50	±25	±50	±25	±35	±18	45	±40	±20		
45									50	±50	±25	±50	±25	±50	±25	±35	±18	50	±40	±20		
50									55	±50	±25	±50	±25	±50	±25	±35	±18	55	±5	±5		
55									58	±50	±25	±50	±25	±50	±25	±15	±5	60				
60									65	±50	±25	±50	±25	±50	±25			65				
65									68	±20	±10	±20	±10	±20	±10			70				

Ethernet/IP	**BIS018A** BIS M-4006-034-001-ST4
Product Group	HF (13.56 MHz)
Dimension	80 x 35 x 119 mm
Installation	metal-free (clear zone) on metal flush in metal
Antenna type	round
Supported data carrier types	DIN ISO 15693, DIN ISO 15693 (High Memory)
Connection	2x M12x1-Female, 4-pole, D-coded M12x1-Male, 4-pole
Housing material	Zinc, die-cast
Interface	Ethernet/IP, Ethernet/IP 2 port Switch
Operating voltage Ub	24 V DC LPS Class 2
Ambient temperature	0...70 °C
Protection degree	IP67
Approval/Conformity	CE

Appropriate data carrier

	BIS0043			BIS011F BIS011E BIS011A BIS0139			BIS0045		BIS0046			BIS0119		BIS00NU BIS00NW BIS0100		
Data carrier distance to metal	>50	>0	>0	>50	>0	>0	>50		>50			>0		>0		
Data carrier clear zone	>200	>200	>0	>200	>200	>0	>200		>200			>100		>100		
Working distance for writing	0-52	0-32	10-19	0-36	0-28	11-18	0-52		0-80			0-38		0-18		
Working distance for reading	0-52	0-32	10-19	0-36	0-28	11-18	0-52		0-80			0-38		0-18		
Offset at distance																
0	±32	±25		±27	±22		±32		±42		0	±27		±22		
5	±32	±25		±27	±22		±32		±42		5	±27		±22		
10	±32	±25	±20	±27	±22		±32		±42		10	±27		±20		
11	±32	±22	±20	±25	±20	±18	±32		±42		15	±25		±18		
12	±32	±22	±20	±25	±20	±18	±32		±42		18	±25		±10		
16	±32	±22	±15	±25	±20	±15	±32		±42		20	±25				
17	±32	±22	±15	±25	±20	±2	±32		±42		25	±22				
18	±32	±22	±8	±25	±20	±2	±32		±42		30	±22				
19	±32	±22	±8	±25	±20		±32		±42		35	±10				
20	±32	±22		±25	±20		±32		±42		38	±10				
25	±28	±15		±22	±15		±28		±42		40					
28	±28	±15		±22	±1		±28		±42		45					
30	±28	±15		±22			±28		±42		50					
32	±28	±10		±5			±28		±38		55					
36	±28			±5			±28		±38		60					
40	±28						±28		±38		65					
50	±12						±12		±38		70					
52	±6						±6		±38		75					

Dimensions in mm

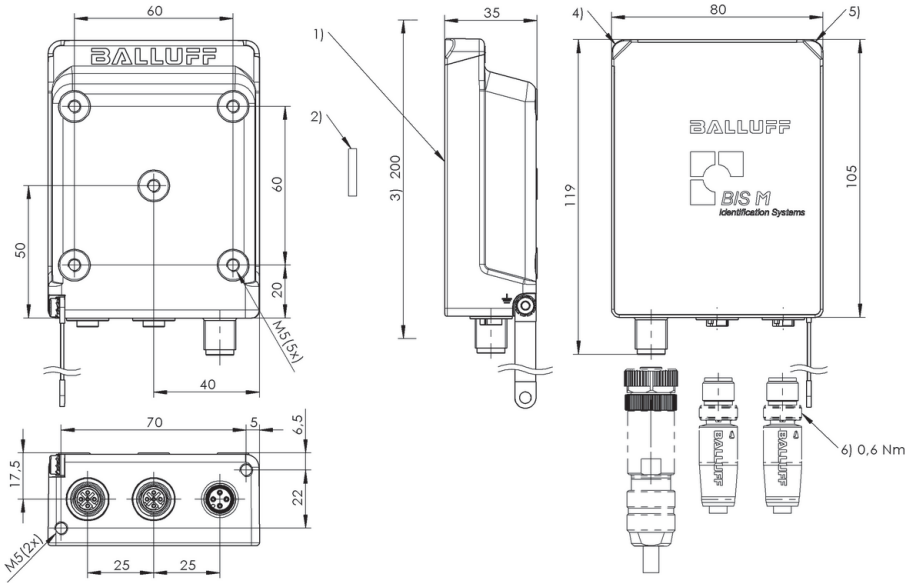

1) Sensing surface, 2) Data carrier, 3) Clear zone, 4) LED (Power), 5) LED (CP), 6) Tightening torque

	BIS00YE	BIS00Y9		BIS00Y4	BIS00Y2
	>50	>50	>0	>50	>50
	>200	>200	>200	>200	>200
	0-60	0-55	0-45	0-90	0-65
	0-60	0-55	0-45	0-90	0-65
0	±35	±32	±27	±50	±36
10	±35	±32	±27	±50	±36
20	±35	±32	±27	±50	±36
30	±30	±30	±25	±50	±33
40	±30	±30	±20	±45	±33
45	±20	±24	±5	±45	±25
50	±20	±24		±45	±25
55	±20	±10		±45	±25
60	±10			±45	±25
65				±30	±10
70				±30	
75				±30	
80				±30	
85				±20	
90				±20	
100					
110					
120					

Ethernet/IP	**BIS018C** BIS M-4006-034-002-ST4
Product Group	HF (13.56 MHz)
Dimension	80 x 35 x 119 mm
Installation	metal-free (clear zone) on metal flush in metal
Antenna type	Rod
Supported data carrier types	DIN ISO 15693, DIN ISO 15693 (High Memory)
Connection	2x M12x1-Female, 4-pole, D-coded M12x1-Male, 4-pole
Housing material	Zinc, die-cast
Interface	Ethernet/IP, Ethernet/IP 2 port Switch
Operating voltage Ub	24 V DC LPS Class 2
Ambient temperature	0...70 °C
Protection degree	IP67
Approval/Conformity	CE

Appropriate data carrier

	BIS004F				BIS004H					BIS00M2			BIS00P3				BIS011W BIS011Y BIS011U BIS013E		
Data carrier clear zone A	>200	>200	>200	>200	>200	>200	>200	>200		>200	>200		>240	>240	>240	>240	>240	>240	
Data carrier clear zone B	>200	>200	>200	>200	>200	>200	>200	>200		>200	>200		>480	>480	>480	>480	>480	>480	
Data carrier clear zone C										>50	>50		>50	>50	>0	>0	>50	>50	
Metallic mounting surface 40 × 22 mm	0-65	0-65			0-65	0-65													
Metallic mounting surface > 200 × 200 mm			0-60	0-60			0-45	0-45											
Working distance for writing	0-65	0-65	0-60	0-60	0-65	0-65	0-45	0-45		0-35	0-35		0-100	0-100	0-100	0-100	0-55	0-55	
Working distance for reading	0-65	0-65	0-60	0-60	0-65	0-65	0-45	0-45		0-35	0-35		0-100	0-100	0-100	0-100	0-55	0-55	
Offset at distance	X	Y	X	Y	X	Y	X	Y		X	Y		X	Y	X	Y	X	Y	
0	±70	±30	±65	±30	±30	±70	±25	±50	0	±44	±22	0	±100	±40	±100	±40	±65	±30	
5	±70	±30	±65	±30	±30	±70	±25	±50	5	±44	±22	5	±100	±40	±100	±40	±65	±30	
10	±70	±30	±65	±30	±30	±70	±25	±50	10	±44	±22	10	±100	±40	±100	±40	±65	±30	
15	±70	±30	±65	±30	±30	±70	±25	±50	15	±40	±20	20	±100	±40	±100	±40	±65	±30	
20	±70	±30	±65	±30	±30	±70	±25	±50	20	±40	±20	25	±100	±40	±100	±40	±60	±25	
25	±65	±25	±60	±25	±25	±65	±20	±40	25	±32	±18	30	±100	±40	±100	±40	±60	±25	
30	±65	±25	±60	±25	±25	±65	±20	±40	30	±32	±18	40	±100	±40	±100	±40	±60	±25	
35	±65	±25	±60	±25	±25	±65	±20	±40	35	±10	±3	50	±80	±35	±80	±35	±30	±20	
40	±65	±25	±60	±25	±25	±65	±15	±30	40			55	±80	±35	±80	±35	±20	±10	
45	±40	±20	±40	±20	±20	±40	±5	±5	45			60	±80	±35	±80	±35			
50	±40	±20	±40	±20	±20	±40			50			70	±80	±35	±80	±35			
55	±40	±20	±40	±20	±20	±40			55			75	±80	±35	±80	±35			
60	±40	±20	±20	±10	±20	±40			60			80	±80	±35	±80	±35			
65	±20	±10			±10	±20			80			95	±55	±25	±55	±25			
70									95			100	±30	±10	±30	±10			
75									100			110							
80									110			120							

Dimensions in mm

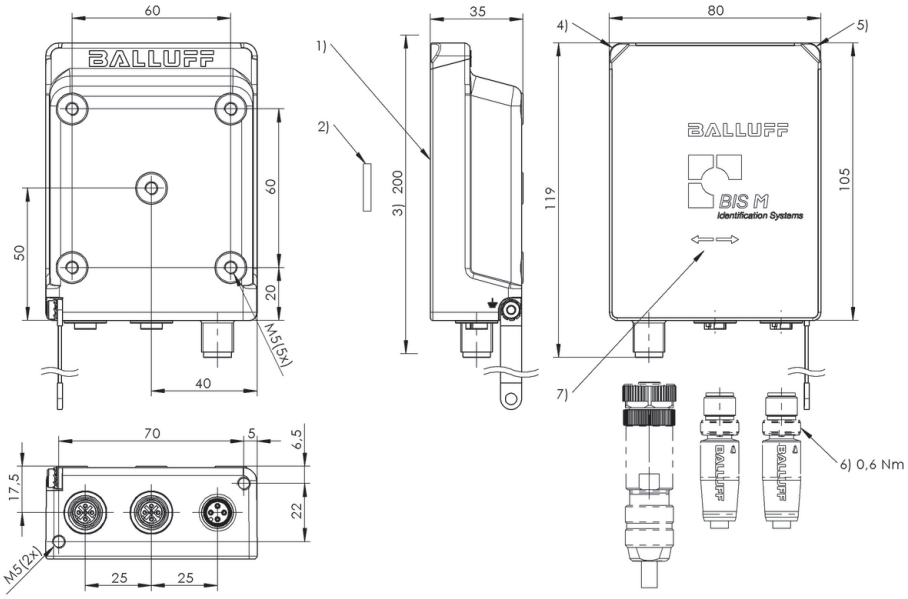

1) Sensing surface, 2) Data carrier, 3) Clear zone, 4) LED (Power), 5) LED (CP), 6) Tightening torque, 7) Read/write axis

	BIS011M BIS011Z BIS011N BIS013C				BIS012J BIS012K BIS012L BIS013F			
	>200	>200	>200	>200	>200	>200	>200	>200
	>200	>200	>200	>200	>200	>200	>200	>200
	0-42	0-42			0-42	0-42		
			0-42	0-42			0-42	0-42
	0-42	0-42	0-42	0-42	0-42	0-42	0-42	0-42
	0-42	0-42	0-42	0-42	0-42	0-42	0-42	0-42
	X	Y	X	Y	X	Y	X	Y
0	±45	±25	±45	±25	±25	±45	±45	±25
5	±45	±25	±45	±25	±25	±45	±45	±25
10	±45	±25	±45	±25	±25	±45	±45	±25
15	±45	±25	±45	±25	±25	±45	±45	±25
20	±45	±25	±45	±25	±25	±45	±45	±25
25	±30	±18	±30	±18	±18	±30	±30	±18
30	±30	±18	±30	±18	±18	±30	±30	±18
35	±30	±18	±30	±18	±18	±30	±30	±18
40	±20	±10	±20	±10	±10	±20	±20	±10
42	±10	±5	±10	±5	±5	±10	±10	±5
45								
50								
55								
60								
65								
70								
75								

	BIS0117				BIS0112			
	>200	>200	>200	>200	>200	>200	>200	>200
	>200	>200	>200	>200	>200	>200	>200	>200
	0-68	0-68			0-68	0-68		
			0-68	0-68			0-58	0-58
	0-68	0-68	0-68	0-68	0-68	0-68	0-58	0-58
	0-68	0-68	0-68	0-68	0-68	0-68	0-58	0-58
	X	Y	X	Y	X	Y	X	Y
0	±75	±32	±75	±32	±75	±32	±60	±28
5	±75	±32	±75	±32	±75	±32	±60	±28
10	±75	±32	±75	±32	±75	±32	±60	±28
15	±75	±32	±75	±32	±75	±32	±60	±28
20	±75	±32	±75	±32	±75	±32	±60	±28
25	±70	±28	±70	±28	±70	±28	±55	±25
30	±70	±28	±70	±28	±70	±28	±55	±25
35	±70	±28	±70	±28	±70	±28	±55	±25
40	±70	±28	±70	±28	±70	±28	±55	±25
45	±50	±25	±50	±25	±50	±25	±35	±18
50	±50	±25	±50	±25	±50	±25	±35	±18
55	±50	±25	±50	±25	±50	±25	±35	±18
58	±50	±25	±50	±25	±50	±25	±15	±5
65	±50	±25	±50	±25	±50	±25		
68	±20	±10	±20	±10	±20	±10		
75								
80								

	BIS00NZ			
	>27	>27	>27	>27
	>27	>27	>27	>27
			0-30	0-30
	0-55	0-55		
	0-55	0-55	0-30	0-30
	0-55	0-55	0-30	0-30
	X	Y	X	Y
0	±65	±28	±44	±24
5	±65	±28	±44	±24
10	±65	±28	±44	±24
15	±65	±28	±38	±21
20	±65	±28	±38	±21
25	±55	±25	±25	±15
30	±55	±25	±8	±5
35	±55	±25		
40	±55	±25		
45	±40	±20		
50	±40	±20		
55	±5	±5		
60				
65				
70				
75				

Do you need more details? Our Product Finder at www.balluff.com provides you with product-specific information, including technical drawings, data sheets, user guides and more for each individual product. All items are available for download.

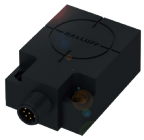

USB	BIS00W4 BIS M-410-068-001-09-S72
Product Group	HF (13.56 MHz)
Dimension	40 x 24 x 56 mm
Installation	metal-free (clear zone)
Antenna type	round
Supported data carrier types	DIN ISO 14443, DIN ISO 15693
Connection	Connector, M12x1 connector, 5-pin
Housing material	PC, with PU potting
Interface	USB 2.0
Operating voltage Ub	5 V DC
Ambient temperature	-20...50 °C
Protection degree	IP67
Approval/Conformity	CE, UL-FILE E227256, Vol.X1, BIS

Appropriate data carrier

	BIS00YL	BIS00YK	BIS00YH	BIS00YF	BIS00YE		BIS00YC	BIS00YA
Data carrier distance to metal	>10	>10	>10	>25	>25		>25	>25
Data carrier clear zone	>60	>60	>60	>100	>100		>100	>100
Working distance for writing	0-17	0-12	0-5	0-48	0-40		0-15	0-15
Working distance for reading	0-17	0-12	0-5	0-48	0-40		0-15	0-15
Offset at distance								
0	±15	±12	±10	±30	±25	0	±15	±15
2	±15	±12	±10	±30	±25	5	±15	±15
4	±15	±12	±7.5	±30	±25	10	±12	±12
5	±15	±12	±5	±30	±25	15	±8	±8
10	±14	±10		±30	±25	20		
12	±12	±5		±25	±20	25		
15	±12			±25	±20	30		
17	±7			±25	±20	32		
20				±25	±20	36		
25				±25	±20	40		
30				±25	±20	45		
35				±20	±12	50		
40				±20	±12	55		
45				±12		60		
48				±12		65		
75						68		
80						75		

Dimensions in mm

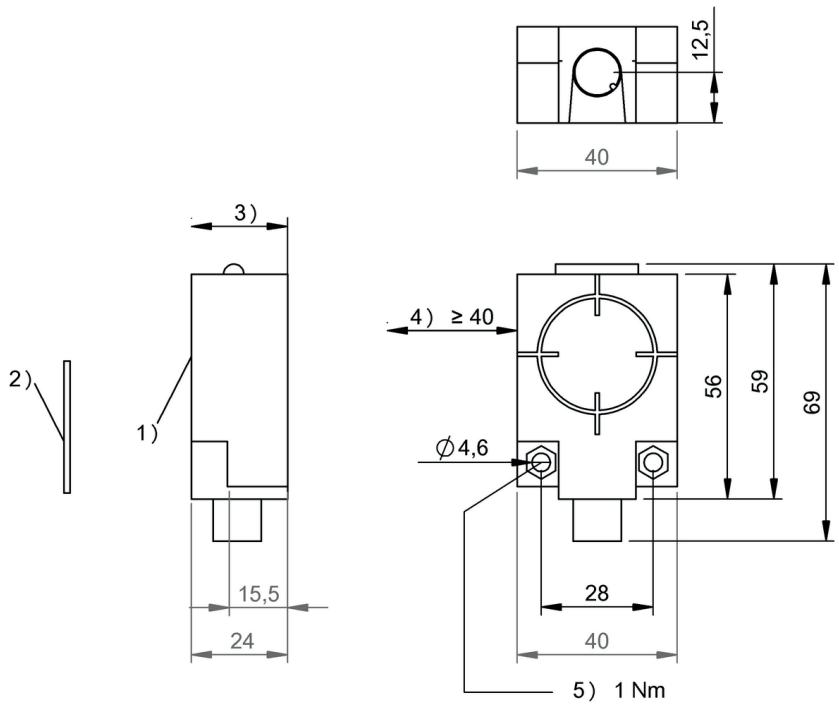

1) Sensing surface, 2) Data carrier, 3) Clear zone, 4) Clear zone surrounding, 5) Tightening torque

BIS00Y9	BIS00Y8	BIS00Y7		BIS00Y6	BIS00Y5	BIS00Y4	BIS00Y3	BIS00Y2		BIS0043
>25	>50	>50		>50	>50	>50	>50	>50		>25
>100	>150	>150		>150	>150	>150	>150	>150		>120
0-32	0-32	0-36		0-60	0-68	0-70	23-46	23-46		0-40
0-32	0-32	0-36		0-60	0-68	0-70	23-46	23-46		0-40
±20	±22	±25	0	±35	±40	±44			0	±22
±20	±22	±25	5	±35	±40	±44			5	±22
±20	±22	±25	10	±35	±40	±44			10	±22
±16	±20	±25	15	±35	±40	±44			15	±22
±16	±20	±25	20	±35	±40	±44			20	±22
±10	±12	±20	23	±30	±32	±32	±24	±24	25	±20
±10	±12	±20	30	±30	±32	±32	±24	±24	30	±20
±8	±8	±12	32	±30	±32	±32	±18	±18	35	±20
		±12	35	±30	±32	±32	±18	±18	40	±10
			40	±30	±32	±32	±18	±18		
			46	±24	±32	±32	±10	±10		
			50	±24	±32	±32				
			55	±16	±24	±25				
			60	±16	±24	±25				
			65		±15	±15				
			68		±15	±15				
			70			±15				

Do you need more details? Our Product Finder at www.balluff.com provides you with product-specific information, including technical drawings, data sheets, user guides and more for each individual product. All items are available for download.

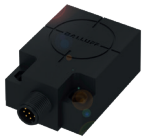

Subnet 16 (RS485)	**BIS00W1** BIS M-410-067-001-04-S92
Product Group	HF (13.56 MHz)
Dimension	40 x 24 x 56 mm
Installation	metal-free (clear zone)
Antenna type	round
Supported data carrier types	DIN ISO 14443, DIN ISO 15693
Connection	Connector, M12x1 connector, 5-pin
Housing material	PC, with PU potting
Interface	Subnet 16 (RS485)
Operating voltage Ub	10...30 VDC
Ambient temperature	-20...50 °C
Protection degree	IP67
Approval/Conformity	CE, UL-FILE E227256, Vol.X1, BIS

* Use with **BIS Z-GW-001...** only

Appropriate data carrier

	BIS00YL	BIS00YK	BIS00YH	BIS00YF	BIS00YE		BIS00YC	BIS00YA
Data carrier distance to metal	>10	>10	>10	>25	>25		>25	>25
Data carrier clear zone	>60	>60	>60	>100	>100		>100	>100
Working distance for writing	0-17	0-12	0-5	0-48	0-40		0-15	0-15
Working distance for reading	0-17	0-12	0-5	0-48	0-40		0-15	0-15
Offset at distance								
0	±15	±12	±10	±30	±25	0	±15	±15
2	±15	±12	±10	±30	±25	5	±15	±15
4	±15	±12	±7,5	±30	±25	10	±12	±12
5	±15	±12	±5	±30	±25	15	±8	±8
10	±14	±10		±30	±25	20		
12	±12	±5		±25	±20	25		
15	±12			±25	±20	30		
17	±7			±25	±20	32		
20				±25	±20	36		
25				±25	±20	40		
30				±25	±20	45		
35				±20	±12	50		
40				±20	±12	55		
45				±12		60		
48				±12		65		
75						68		
80						75		

Dimensions in mm

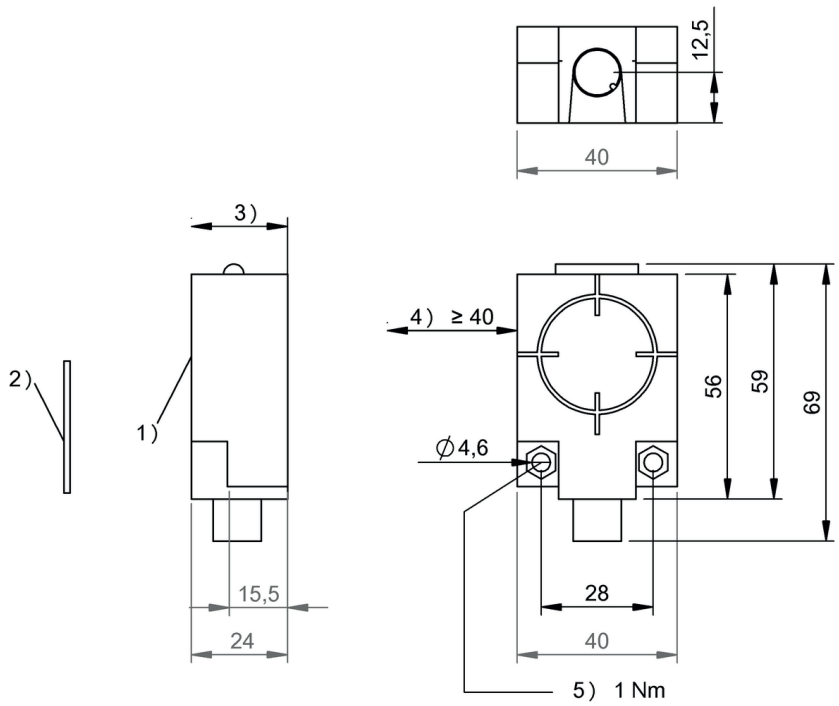

1) Sensing surface, 2) Data carrier, 3) Clear zone, 4) Clear zone surrounding, 5) Tightening torque

	BIS00Y9	BIS00Y8	BIS00Y7		BIS00Y6	BIS00Y5	BIS00Y4	BIS00Y3	BIS00Y2		BIS0043
	>25	>50	>50		>50	>50	>50	>50	>50		>25
	>100	>150	>150		>150	>150	>150	>150	>150		>120
	0-32	0-32	0-36		0-60	0-68	0-70	23-46	23-46		0-40
	0-32	0-32	0-36		0-60	0-68	0-70	23-46	23-46		0-40
	±20	±22	±25	0	±35	±40	±44			0	±22
	±20	±22	±25	5	±35	±40	±44			5	±22
	±20	±22	±25	10	±35	±40	±44			10	±22
	±16	±20	±25	15	±35	±40	±44			15	±22
	±16	±20	±25	20	±35	±40	±44			20	±22
	±10	±12	±20	23	±30	±32	±32	±24	±24	25	±20
	±10	±12	±20	30	±30	±32	±32	±24	±24	30	±20
	±8	±8	±12	32	±30	±32	±32	±18	±18	35	±20
			±12	35	±30	±32	±32	±18	±18	40	±10
				40	±30	±32	±32	±18	±18		
				46	±24	±32	±32	±10	±10		
				50	±24	±32	±32				
				55	±16	±24	±25				
				60	±16	±24	±25				
				65		±15	±15				
				68		±15	±15				
				70			±15				

Do you need more details? Our Product Finder at www.balluff.com provides you with product-specific information, including technical drawings, data sheets, user guides and more for each individual product. All items are available for download.

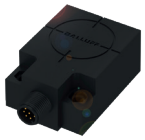

RS422	BIS00W3 BIS M-410-068-001-02-S115
Product Group	HF (13.56 MHz)
Dimension	40 x 24 x 56 mm
Installation	metal-free (clear zone)
Antenna type	round
Supported data carrier types	DIN ISO 14443, DIN ISO 15693
Connection	Connector, M12x1 connector, 8-pin
Housing material	PC, with PU potting
Interface	RS422
Operating voltage Ub	10...30 VDC
Ambient temperature	-20...50 °C
Protection degree	IP67
Approval/Conformity	CE, UL-FILE E227256, Vol.X1, BIS

Appropriate data carrier

	BIS00YL	BIS00YK	BIS00YH	BIS00YF	BIS00YE		BIS00YC	BIS00YA
Data carrier distance to metal	>10	>10	>10	>25	>25		>25	>25
Data carrier clear zone	>60	>60	>60	>100	>100		>100	>100
Working distance for writing	0-17	0-12	0-5	0-48	0-40		0-15	0-15
Working distance for reading	0-17	0-12	0-5	0-48	0-40		0-15	0-15
Offset at distance								
0	±15	±12	±10	±30	±25	0	±15	±15
2	±15	±12	±10	±30	±25	5	±15	±15
4	±15	±12	±7.5	±30	±25	10	±12	±12
5	±15	±12	±5	±30	±25	15	±8	±8
10	±14	±10		±30	±25	20		
12	±12	±5		±25	±20	25		
15	±12			±25	±20	30		
17	±7			±25	±20	32		
20				±25	±20	36		
25				±25	±20	40		
30				±25	±20	45		
35				±20	±12	50		
40				±20	±12	55		
45				±12		60		
48				±12		65		
75						68		
80						75		

Dimensions in mm

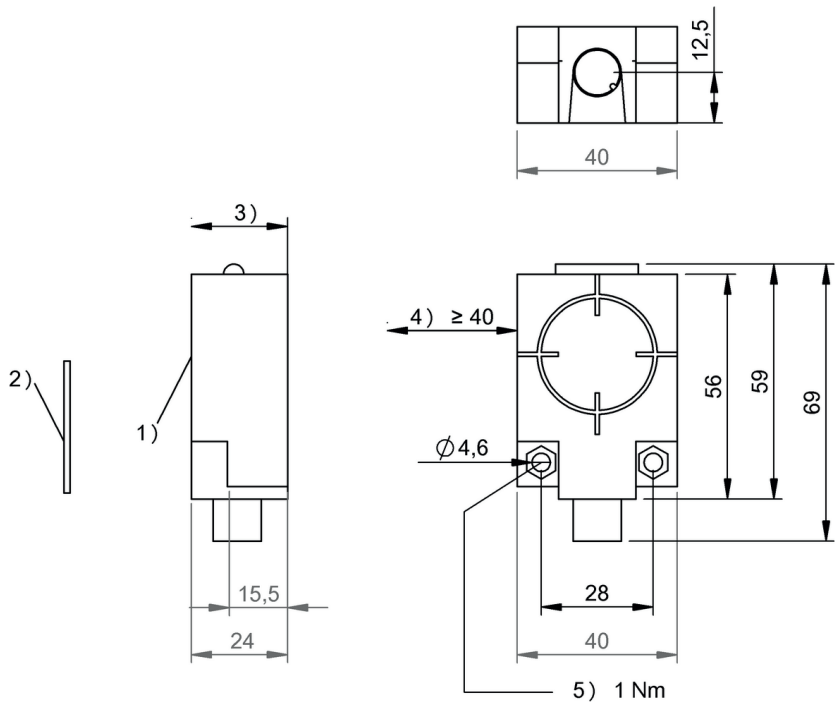

1) Sensing surface, 2) Data carrier, 3) Clear zone, 4) Clear zone surrounding, 5) Tightening torque

	BIS00Y9	BIS00Y8	BIS00Y7		BIS00Y6	BIS00Y5	BIS00Y4	BIS00Y3	BIS00Y2		BIS0043
	>25	>50	>50		>50	>50	>50	>50	>50		>25
	>100	>150	>150		>150	>150	>150	>150	>150		>120
	0-32	0-32	0-36		0-60	0-68	0-70	23-46	23-46		0-40
	0-32	0-32	0-36		0-60	0-68	0-70	23-46	23-46		0-40
	±20	±22	±25	0	±35	±40	±44			0	±22
	±20	±22	±25	5	±35	±40	±44			5	±22
	±20	±22	±25	10	±35	±40	±44			10	±22
	±16	±20	±25	15	±35	±40	±44			15	±22
	±16	±20	±25	20	±35	±40	±44			20	±22
	±10	±12	±20	23	±30	±32	±32	±24	±24	25	±20
	±10	±12	±20	30	±30	±32	±32	±24	±24	30	±20
	±8	±8	±12	32	±30	±32	±32	±18	±18	35	±20
			±12	35	±30	±32	±32	±18	±18	40	±10
				40	±30	±32	±32	±18	±18		
				46	±24	±32	±32	±10	±10		
				50	±24	±32	±32				
				55	±16	±24	±25				
				60	±16	±24	±25				
				65		±15	±15				
				68		±15	±15				
				70			±15				

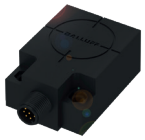

RS232	**BIS00W2** BIS M-410-068-001-00-S115
Product Group	HF (13.56 MHz)
Dimension	40 x 24 x 56 mm
Installation	metal-free (clear zone)
Antenna type	round
Supported data carrier types	DIN ISO 14443, DIN ISO 15693
Connection	Connector, M12x1 connector, 8-pin
Housing material	PC, with PU potting
Interface	RS232
Operating voltage Ub	10...30 VDC
Ambient temperature	-20...50 °C
Protection degree	IP67
Approval/Conformity	CE, UL-FILE E227256, Vol.X1, BIS

Appropriate data carrier

	BIS00YL	BIS00YK	BIS00YH	BIS00YF	BIS00YE		BIS00YC	BIS00YA
Data carrier distance to metal	>10	>10	>10	>25	>25		>25	>25
Data carrier clear zone	>60	>60	>60	>100	>100		>100	>100
Working distance for writing	0-17	0-12	0-5	0-48	0-40		0-15	0-15
Working distance for reading	0-17	0-12	0-5	0-48	0-40		0-15	0-15
Offset at distance								
0	±15	±12	±10	±30	±25	0	±15	±15
2	±15	±12	±10	±30	±25	5	±15	±15
4	±15	±12	±7.5	±30	±25	10	±12	±12
5	±15	±12	±5	±30	±25	15	±8	±8
10	±14	±10		±30	±25	20		
12	±12	±5		±25	±20	25		
15	±12			±25	±20	30		
17	±7			±25	±20	32		
20				±25	±20	36		
25				±25	±20	40		
30				±25	±20	45		
35				±20	±12	50		
40				±20	±12	55		
45				±12		60		
48				±12		65		
75						68		
80						75		

Dimensions in mm

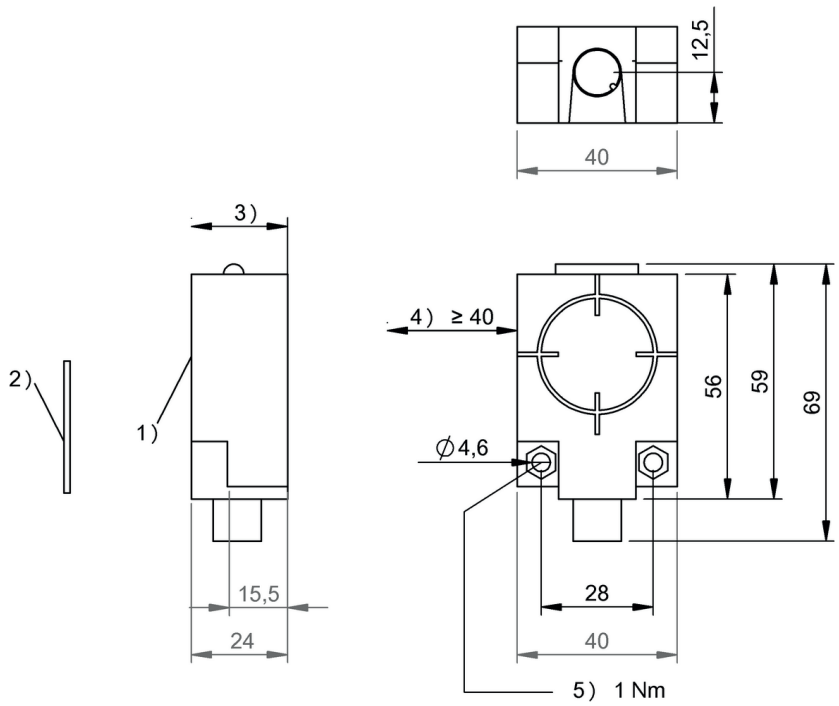

1) Sensing surface, 2) Data carrier, 3) Clear zone, 4) Clear zone surrounding, 5) Tightening torque

BIS00Y9	BIS00Y8	BIS00Y7		BIS00Y6	BIS00Y5	BIS00Y4	BIS00Y3	BIS00Y2		BIS0043
>25	>50	>50		>50	>50	>50	>50	>50		>25
>100	>150	>150		>150	>150	>150	>150	>150		>120
0-32	0-32	0-36		0-60	0-68	0-70	23-46	23-46		0-40
0-32	0-32	0-36		0-60	0-68	0-70	23-46	23-46		0-40
±20	±22	±25	0	±35	±40	±44			0	±22
±20	±22	±25	5	±35	±40	±44			5	±22
±20	±22	±25	10	±35	±40	±44			10	±22
±16	±20	±25	15	±35	±40	±44			15	±22
±16	±20	±25	20	±35	±40	±44			20	±22
±10	±12	±20	23	±30	±32	±32	±24	±24	25	±20
±10	±12	±20	30	±30	±32	±32	±24	±24	30	±20
±8	±8	±12	32	±30	±32	±32	±18	±18	35	±20
		±12	35	±30	±32	±32	±18	±18	40	±10
			40	±30	±32	±32	±18	±18		
			46	±24	±32	±32	±10	±10		
			50	±24	±32	±32				
			55	±16	±24	±25				
			60	±16	±24	±25				
			65		±15	±15				
			68		±15	±15				
			70			±15				

Do you need more details? Our Product Finder at www.balluff.com provides you with product-specific information, including technical drawings, data sheets, user guides and more for each individual product. All items are available for download.

USB	BIS00W8 BIS M-411-068-001-09-S72
Product Group	HF (13.56 MHz)
Dimension	75 x 24 x 105 mm
Installation	metal-free (clear zone)
Antenna type	round
Supported data carrier types	DIN ISO 14443, DIN ISO 15693
Connection	Connector, M12x1 connector, 5-pin
Housing material	PC, with PU potting
Interface	USB 2.0
Operating voltage Ub	5 V DC
Ambient temperature	-20...50 °C
Protection degree	IP67
Approval/Conformity	CE, UL-FILE E227256, Vol.X1, BIS

Appropriate data carrier

	BIS00YL	BIS00YK	BIS00YF	BIS00YE		BIS00YC	BIS00YA	BIS00Y9
Data carrier distance to metal	>10	>10	>25	>25		>25	>25	>25
Data carrier clear zone	>60	>60	>100	>100		>100	>100	>100
Working distance for writing	0-20	0-13	0-80	0-70		0-26	0-22	38-52
Working distance for reading	0-20	0-13	0-80	0-70		0-26	0-22	38-52
Offset at distance								
0	±22	±22	±50	±42	0	±20	±20	
5	±22	±22	±50	±42	5	±20	±20	
9	±19	±20	±50	±42	10	±20	±20	
12	±19	±12	±50	±42	15	±20	±20	
13	±19	±5	±50	±42	20	±15	±15	
15	±19		±50	±42	22	±15	±10	
20	±14		±50	±42	26	±15		
22			±40	±39	30			
26			±40	±39	38			±25
30			±40	±39	40			±25
35			±40	±39	45			±25
40			±40	±39	50			±25
45			±35	±36	52			±25
50			±35	±36	56			
60			±35	±36	60			
65			±30	±28	70			
70			±30	±28	80			
75			±30		90			
80			±30		100			
90					110			

Dimensions in mm

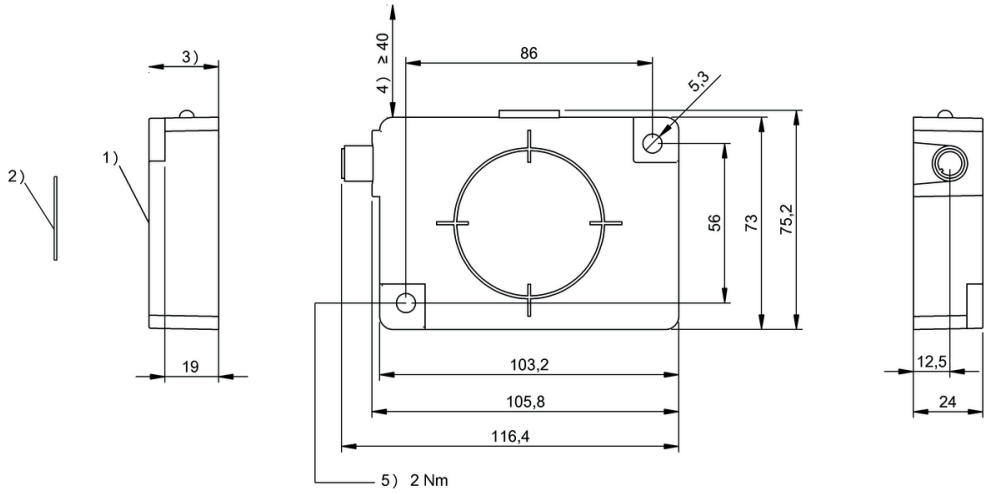

1) Sensing surface, 2) Data carrier, 3) Clear zone, 4) Clear zone surrounding, 5) Tightening torque

	BIS00Y8	BIS00Y7		BIS00Y6	BIS00Y5	BIS00Y4	BIS00Y3	BIS00Y2		BIS0044	BIS0045
	>50	>50		>50	>50	>50	>50	>50		>25	>25
	>150	>150		>150	>150	>150	>150	>150		>100	>100
	0-56	0-60		0-100	0-110	0-125	11-95	11-75		0-45	0-67
	0-56	0-60		0-100	0-110	0-125	11-95	11-75		0-45	0-67
	±35	±32	0	±50	±62	±65			0	±30	±40
	±35	±32	5	±50	±62	±65			5	±30	±40
	±35	±32	11	±50	±62	±65	±52	±50	10	±30	±40
	±35	±32	15	±50	±62	±65	±52	±50	15	±28	±40
	±35	±32	20	±50	±62	±65	±52	±50	20	±28	±40
	±30	±30	25	±50	±62	±65	±52	±50	25	±28	±38
	±30	±30	30	±50	±62	±65	±52	±50	30	±28	±38
	±30	±30	35	±50	±58	±65	±48	±42	35	±25	±38
	±30	±30	40	±50	±58	±65	±48	±42	40	±25	±38
	±30	±30	45	±50	±58	±62	±48	±42	45	±10	±35
	±30	±25	50	±50	±58	±62	±48	±42	50		±35
	±25	±25	55	±50	±58	±62	±48	±42	55		±35
	±25	±20	60	±50	±58	±62	±48	±35	60		±35
	±25	±20	75	±45	±52	±62	±44	±35	67		±10
		±20	85	±45	±52	±58	±44		70		
			95	±45	±52	±58	±40		75		
			100	±45	±52	±58			80		
			110		±48	±58			85		
			120			±58			90		
			125			±50			95		

Do you need more details? Our Product Finder at www.balluff.com provides you with product-specific information, including technical drawings, data sheets, user guides and more for each individual product. All items are available for download.

Subnet 16 (RS485)	**BIS00W5** BIS M-411-067-001-04-S92
Product Group	HF (13.56 MHz)
Dimension	75 x 24 x 105 mm
Installation	metal-free (clear zone)
Antenna type	round
Supported data carrier types	DIN ISO 14443, DIN ISO 15693
Connection	Connector, M12x1 connector, 5-pin
Housing material	PC, with PU potting
Interface	Subnet 16 (RS485)
Operating voltage Ub	10...30 VDC
Ambient temperature	-20...50 °C
Protection degree	IP67
Approval/Conformity	CE, UL-FILE E227256, Vol.X1, BIS

* Use with **BIS Z-GW-001...** only

Appropriate data carrier

	BIS00YL	BIS00YK	BIS00YF	BIS00YE		BIS00YC	BIS00YA	BIS00Y9
Data carrier distance to metal	>10	>10	>25	>25		>25	>25	>25
Data carrier clear zone	>60	>60	>100	>100		>100	>100	>100
Working distance for writing	0-20	0-13	0-80	0-70		0-26	0-22	38-52
Working distance for reading	0-20	0-13	0-80	0-70		0-26	0-22	38-52
Offset at distance								
0	±22	±22	±50	±42	0	±20	±20	
5	±22	±22	±50	±42	5	±20	±20	
9	±19	±20	±50	±42	10	±20	±20	
12	±19	±12	±50	±42	15	±20	±20	
13	±19	±5	±50	±42	20	±15	±15	
15	±19		±50	±42	22	±15	±10	
20	±14		±50	±42	26	±15		
22			±40	±39	30			
26			±40	±39	38			±25
30			±40	±39	40			±25
35			±40	±39	45			±25
40			±40	±39	50			±25
45			±35	±36	52			±25
50			±35	±36	56			
60			±35	±36	60			
65			±30	±28	70			
70			±30	±28	80			
75			±30		90			
80			±30		100			
90					110			

Dimensions in mm

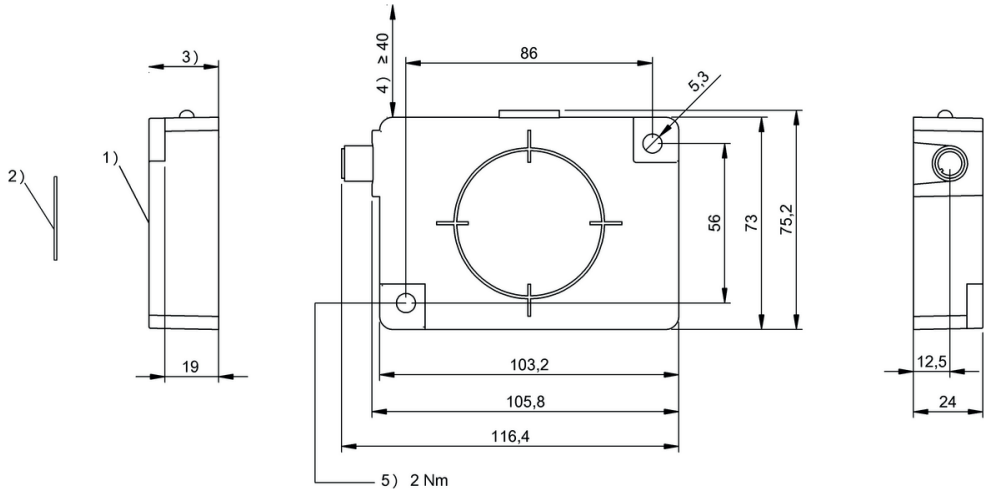

1) Sensing surface, 2) Data carrier, 3) Clear zone, 4) Clear zone surrounding, 5) Tightening torque

	BIS00Y8	BIS00Y7		BIS00Y6	BIS00Y5	BIS00Y4	BIS00Y3	BIS00Y2		BIS0044	BIS0045
	>50	>50		>50	>50	>50	>50	>50		>25	>25
	>150	>150		>150	>150	>150	>150	>150		>100	>100
	0-56	0-60		0-100	0-110	0-125	11-95	11-75		0-45	0-67
	0-56	0-60		0-100	0-110	0-125	11-95	11-75		0-45	0-67
	±35	±32	0	±50	±62	±65			0	±30	±40
	±35	±32	5	±50	±62	±65			5	±30	±40
	±35	±32	11	±50	±62	±65	±52	±50	10	±30	±40
	±35	±32	15	±50	±62	±65	±52	±50	15	±28	±40
	±35	±32	20	±50	±62	±65	±52	±50	20	±28	±40
	±30	±30	25	±50	±62	±65	±52	±50	25	±28	±38
	±30	±30	30	±50	±62	±65	±52	±50	30	±28	±38
	±30	±30	35	±50	±58	±65	±48	±42	35	±25	±38
	±30	±30	40	±50	±58	±65	±48	±42	40	±25	±38
	±30	±30	45	±50	±58	±62	±48	±42	45	±10	±35
	±30	±25	50	±50	±58	±62	±48	±42	50		±35
	±25	±25	55	±50	±58	±62	±48	±42	55		±35
	±25	±20	60	±50	±58	±62	±48	±35	60		±35
	±25	±20	75	±45	±52	±62	±44	±35	67		±10
		±20	85	±45	±52	±58	±44		70		
			95	±45	±52	±58	±40		75		
			100	±45	±52	±58			80		
			110		±48	±58			85		
			120			±58			90		
			125			±50			95		

Do you need more details? Our Product Finder at www.balluff.com provides you with product-specific information, including technical drawings, data sheets, user guides and more for each individual product. All items are available for download.

RS422	BIS00W7 BIS M-411-068-001-02-S115
Product Group	HF (13.56 MHz)
Dimension	75 x 24 x 105 mm
Installation	metal-free (clear zone)
Antenna type	round
Supported data carrier types	DIN ISO 14443, DIN ISO 15693
Connection	Connector, M12x1 connector, 8-pin
Housing material	PC, with PU potting
Interface	RS422
Operating voltage Ub	10...30 VDC
Ambient temperature	-20...50 °C
Protection degree	IP67
Approval/Conformity	CE, UL-FILE E227256, Vol.X1, BIS

Appropriate data carrier

	BIS00YL	BIS00YK	BIS00YF	BIS00YE		BIS00YC	BIS00YA	BIS00Y9
Data carrier distance to metal	>10	>10	>25	>25		>25	>25	>25
Data carrier clear zone	>60	>60	>100	>100		>100	>100	>100
Working distance for writing	0-20	0-13	0-80	0-70		0-26	0-22	38-52
Working distance for reading	0-20	0-13	0-80	0-70		0-26	0-22	38-52
Offset at distance								
0	±22	±22	±50	±42	0	±20	±20	
5	±22	±22	±50	±42	5	±20	±20	
9	±19	±20	±50	±42	10	±20	±20	
12	±19	±12	±50	±42	15	±20	±20	
13	±19	±5	±50	±42	20	±15	±15	
15	±19		±50	±42	22	±15	±10	
20	±14		±50	±42	26	±15		
22			±40	±39	30			
26			±40	±39	38			±25
30			±40	±39	40			±25
35			±40	±39	45			±25
40			±40	±39	50			±25
45			±35	±36	52			±25
50			±35	±36	56			
60			±35	±36	60			
65			±30	±28	70			
70			±30	±28	80			
75			±30		90			
80			±30		100			
90					110			

Dimensions in mm

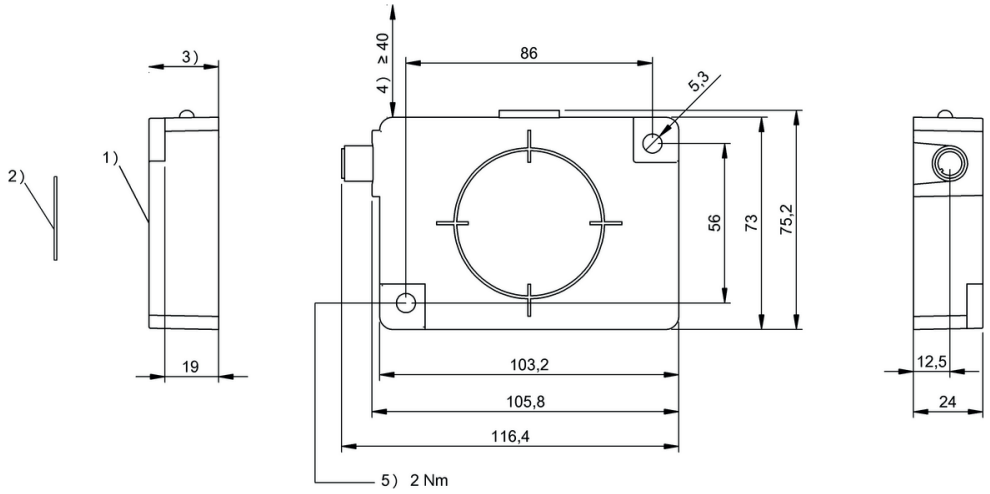

1) Sensing surface, 2) Data carrier, 3) Clear zone, 4) Clear zone surrounding, 5) Tightening torque

	BIS00Y8	BIS00Y7		BIS00Y6	BIS00Y5	BIS00Y4	BIS00Y3	BIS00Y2		BIS0044	BIS0045
	>50	>50		>50	>50	>50	>50	>50		>25	>25
	>150	>150		>150	>150	>150	>150	>150		>100	>100
	0-56	0-60		0-100	0-110	0-125	11-95	11-75		0-45	0-67
	0-56	0-60		0-100	0-110	0-125	11-95	11-75		0-45	0-67
	±35	±32	0	±50	±62	±65			0	±30	±40
	±35	±32	5	±50	±62	±65			5	±30	±40
	±35	±32	11	±50	±62	±65	±52	±50	10	±30	±40
	±35	±32	15	±50	±62	±65	±52	±50	15	±28	±40
	±35	±32	20	±50	±62	±65	±52	±50	20	±28	±40
	±30	±30	25	±50	±62	±65	±52	±50	25	±28	±38
	±30	±30	30	±50	±62	±65	±52	±50	30	±28	±38
	±30	±30	35	±50	±58	±65	±48	±42	35	±25	±38
	±30	±30	40	±50	±58	±65	±48	±42	40	±25	±38
	±30	±30	45	±50	±58	±62	±48	±42	45	±10	±35
	±30	±25	50	±50	±58	±62	±48	±42	50		±35
	±25	±25	55	±50	±58	±62	±48	±42	55		±35
	±25	±20	60	±50	±58	±62	±48	±35	60		±35
	±25	±20	75	±45	±52	±62	±44	±35	67		±10
		±20	85	±45	±52	±58	±44		70		
			95	±45	±52	±58	±40		75		
			100	±45	±52	±58			80		
			110		±48	±58			85		
			120			±58			90		
			125			±50			95		

Do you need more details? Our Product Finder at www.balluff.com provides you with product-specific information, including technical drawings, data sheets, user guides and more for each individual product. All items are available for download.

RS232	BIS00W6 BIS M-411-068-001-00-S115
Product Group	HF (13.56 MHz)
Dimension	75 x 24 x 105 mm
Installation	metal-free (clear zone)
Antenna type	round
Supported data carrier types	DIN ISO 14443, DIN ISO 15693
Connection	Connector, M12x1 connector, 8-pin
Housing material	PC, with PU potting
Interface	RS232
Operating voltage Ub	10...30 VDC
Ambient temperature	-20...50 °C
Protection degree	IP67
Approval/Conformity	CE, UL-FILE E227256, Vol.X1, BIS

Appropriate data carrier

	BIS00YL	BIS00YK	BIS00YF	BIS00YE		BIS00YC	BIS00YA	BIS00Y9
Data carrier distance to metal	>10	>10	>25	>25		>25	>25	>25
Data carrier clear zone	>60	>60	>100	>100		>100	>100	>100
Working distance for writing	0-20	0-13	0-80	0-70		0-26	0-22	38-52
Working distance for reading	0-20	0-13	0-80	0-70		0-26	0-22	38-52
Offset at distance								
0	±22	±22	±50	±42	0	±20	±20	
5	±22	±22	±50	±42	5	±20	±20	
9	±19	±20	±50	±42	10	±20	±20	
12	±19	±12	±50	±42	15	±20	±20	
13	±19	±5	±50	±42	20	±15	±15	
15	±19		±50	±42	22	±15	±10	
20	±14		±50	±42	26	±15		
22			±40	±39	30			
26			±40	±39	38			±25
30			±40	±39	40			±25
35			±40	±39	45			±25
40			±40	±39	50			±25
45			±35	±36	52			±25
50			±35	±36	56			
60			±35	±36	60			
65			±30	±28	70			
70			±30	±28	80			
75			±30		90			
80			±30		100			
90					110			

Dimensions in mm

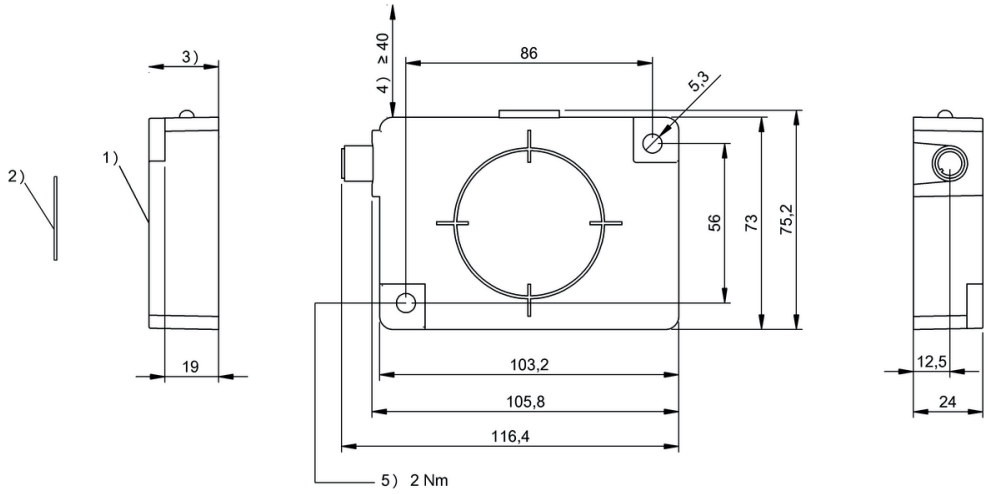

1) Sensing surface, 2) Data carrier, 3) Clear zone, 4) Clear zone surrounding, 5) Tightening torque

	BIS00Y8	BIS00Y7		BIS00Y6	BIS00Y5	BIS00Y4	BIS00Y3	BIS00Y2		BIS0044	BIS0045
	>50	>50		>50	>50	>50	>50	>50		>25	>25
	>150	>150		>150	>150	>150	>150	>150		>100	>100
	0-56	0-60		0-100	0-110	0-125	11-95	11-75		0-45	0-67
	0-56	0-60		0-100	0-110	0-125	11-95	11-75		0-45	0-67
	±35	±32	0	±50	±62	±65			0	±30	±40
	±35	±32	5	±50	±62	±65			5	±30	±40
	±35	±32	11	±50	±62	±65	±52	±50	10	±30	±40
	±35	±32	15	±50	±62	±65	±52	±50	15	±28	±40
	±35	±32	20	±50	±62	±65	±52	±50	20	±28	±40
	±30	±30	25	±50	±62	±65	±52	±50	25	±28	±38
	±30	±30	30	±50	±62	±65	±52	±50	30	±28	±38
	±30	±30	35	±50	±58	±65	±48	±42	35	±25	±38
	±30	±30	40	±50	±58	±65	±48	±42	40	±25	±38
	±30	±30	45	±50	±58	±62	±48	±42	45	±10	±35
	±30	±25	50	±50	±58	±62	±48	±42	50		±35
	±25	±25	55	±50	±58	±62	±48	±42	55		±35
	±25	±20	60	±50	±58	±62	±48	±35	60		±35
	±25	±20	75	±45	±52	±62	±44	±35	67		±10
		±20	85	±45	±52	±58	±44		70		
			95	±45	±52	±58	±40		75		
			100	±45	±52	±58			80		
			110		±48	±58			85		
			120			±58			90		
			125			±50			95		

	BAE00JJ BIS Z-GW-001-IND
Dimension	107 x 33 x 109 mm
Interface	Industrial Ethernet / MODBUS TCP
Auxiliary interfaces	Subnet 16 (RS485)
Housing material	Aluminum, die-cast
Ambient temperature	-20...50 °C
Protection degree	IP30
Approval/Conformity	CE, FCC Part 15
Productview	Page 307

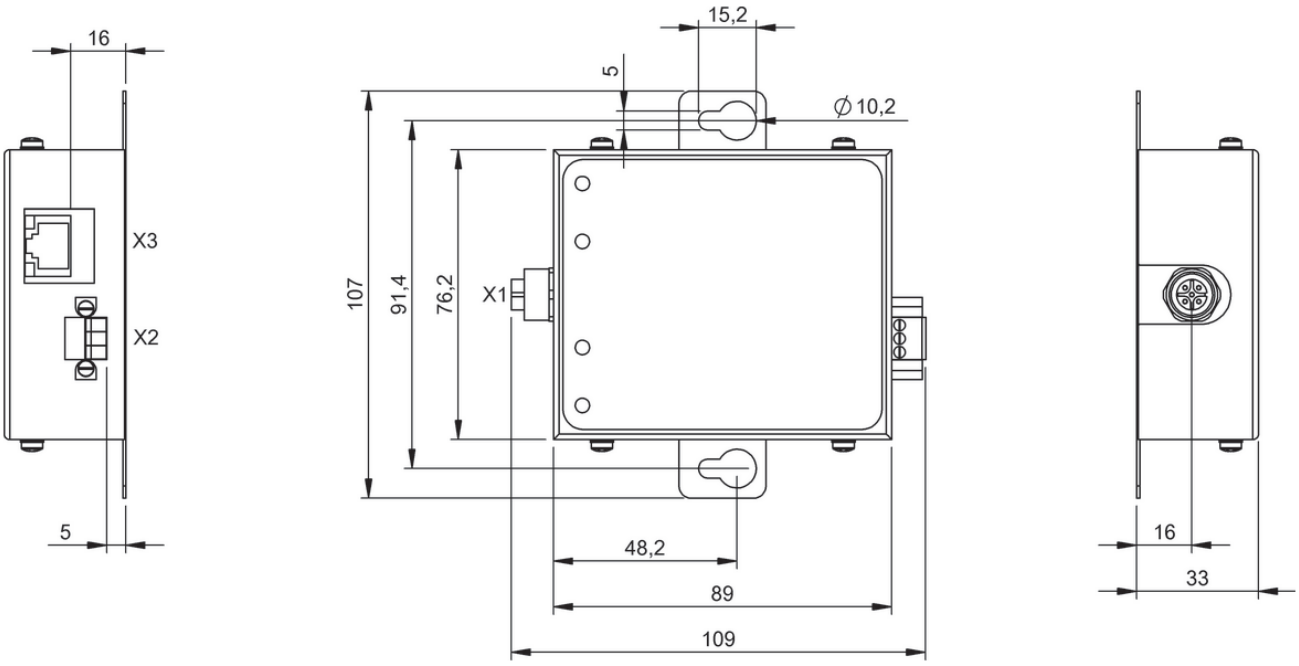
16
X3
X2
5
15,2
5
∅ 10,2
107
91,4
76,2
X1
48,2
89
109
16
33

BALLUFF
BALLUFF
BALLUFF

PORTABLE HF READ/ WRITE UNITS (13.56 MHZ)

Do you need more details?
Our Product Finder at **www.balluff.com**
provides you with product-specific information,

including technical drawings, data sheets, user guides and more for each individual product.
All items are available for download.

Head 2
Head 1
System Ready
Clocking Present
Clocking Operating
BALLUFF
Software Version
Hardware version
BALLUFF
BALLUFF
BALLUFF

Tool identification even at short ranges

RFID SYSTEM LF (70/455 KHZ) BIS C

Especially high-performing and flexible are the BIS C low-frequency RFID systems with reliable tool identification in coolant- and lubricant-heavy machining centers. Exact positioning is not always necessary: Many data carriers can be dynamically read and described in passing.

The LF RFID system (70/455 kHz) is also the first choice for tool identification over short ranges. Other areas of use are tool transport with conveyor systems, FTS and pallet transport systems as well as assembly technology and resource organization.

Features

- Great variety of data carriers and read/write heads for very diverse applications and difficult operating conditions
- Wear-free, maintenance-free and insensitive to dirt
- High noise immunity and assured data transfer with special checking software in the processor units
- All bus systems commonly used on a global basis available
- Memory capacity up to 8 kB

	BIS000T BIS C-121-04/L	
Product Group	LF (70/455 kHz)	
Dimension	Ø 9 x 4.5 mm	
Antenna type	round	
Memory type	EEPROM	
User data, read/write	511 Byte	
Storage temperature	-30...85 °C	
Storage temperature temporary	—	
Ambient temperature	0...70 °C	
Housing material	Epoxy-resin/fiberglass	
Protection degree	IP68	
Installation	metal-free (clear zone) on metal flush in metal	
Approval/Conformity	CE, UL-FILE E227256, Vol.X1, BIS	
Productview	Page 330	

Suitable read/write head with max. read/write working distance

Installation	flush in metal	on metal*	metal-free (clear zone)	
BIS C-300	0-2		0-3	
BIS C-302	0-1.5		0-2.5	
BIS C-305	0-2		0-3	
BIS C-306	0-2		0-3	
BIS C-322	0-2		0-3	
BIS C-325	0-2		0-3	

Dimensions in mm

* Installation on request

	BIS0011 BIS C-122-04/L	BIS015W BIS C-122-05/L	BIS0015 BIS C-122-11/L
	LF (70/455 kHz)	LF (70/455 kHz)	LF (70/455 kHz)
	Ø 10 x 4.5 mm	Ø 10 x 4.5 mm	Ø 10 x 4.5 mm
	round	round	round
	EEPROM	EEPROM	EEPROM
	511 Byte	1023 Byte	2047 Byte
	-30...85 °C	-30...85 °C	-30...85 °C
	—	—	120 °C
	0...70 °C	0...70 °C	-30...70 °C
	Epoxy-resin/fiberglass	Epoxy-resin/fiberglass	Epoxy-resin/fiberglass
	IP68	IP68	IP68
	metal-free (clear zone) on metal flush in metal	metal-free (clear zone) on metal flush in metal	metal-free (clear zone) on metal flush in metal
	CE, UL-FILE E227256, Vol.X1, BIS	CE, UL-FILE E227256, Vol.X1, BIS	CE, UL-FILE E227256, Vol.X1, BIS
	Page 330	Page 330	Page 330

	flush in metal	on metal*	metal-free (clear zone)	flush in metal	on metal*	metal-free (clear zone)	flush in metal	on metal*	metal-free (clear zone)
	0-2.5		0-3	0-2.5		0-3	0-2.5		0-3
	0-2		0-2.5	0-2		0-2.5	0-2		0-2.5
	0-2.5		0-3	0-2.5		0-3	0-2.5		0-3
	0-2.5		0-3	0-2.5		0-3	0-2.5		0-3
	0-2.5		0-3	0-2.5		0-3	0-2.5		0-3
	0-4.5		0-5	0-4.5		0-5	0-4.5		0-5

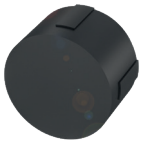

	BIS0004 BIS C-103-05/A	
Product Group	LF (70/455 kHz)	
Dimension	Ø 12 x 8 mm	
Antenna type	round	
Memory type	EEPROM	
User data, read/write	1023 Byte	
Storage temperature	-30...85 °C	
Storage temperature temporary	120 °C	
Ambient temperature	-30...70 °C	
Housing material	Epoxy-resin/fiberglass	
Protection degree	IP68	
Installation	metal-free (clear zone) on metal flush in metal	
Approval/Conformity	CE, UL-FILE E227256, Vol.X1, BIS	
Productview	Page 330	

Suitable read/write head with max. read/write working distance

Installation	flush in metal	on metal*	metal-free (clear zone)	
BIS C-300	0-3.5		0-4	
BIS C-302	0-3		0-3.5	
BIS C-305	0-5		0-6	
BIS C-306	0-3.5		0-4	
BIS C-310				
BIS C-315				
BIS C-319				
BIS C-322	0-5		0-6	
BIS C-323				
BIS C-324				
BIS C-325	0-4.5		0-5	
BIS C-326				

Dimensions in mm

* Installation on request

	BIS0009 BIS C-105-05/A	BIS001E BIS C-130-05/L	BIS0002 BIS C-100-05/A
	LF (70/455 kHz)	LF (70/455 kHz)	LF (70/455 kHz)
	Ø 12 x 6 mm	Ø 15.98 x 7 mm	Ø 16 x 10.5 mm
	round	round	round
	EEPROM	EEPROM	EEPROM
	1023 Byte	1023 Byte	1023 Byte
	-30...85 °C	-30...85 °C	-20...85 °C
	120 °C	—	—
	-30...70 °C	-30...70 °C	0...70 °C
	Epoxy-resin/fiberglass	Epoxy-resin/fiberglass	PA 6.6
	IP68	IP68	IP68
	metal-free (clear zone) on metal flush in metal	metal-free (clear zone)	metal-free (clear zone) on metal flush in metal
	CE, UL-FILE E227256, Vol.X1, BIS	CE, UL-FILE E227256, Vol.X1, BIS	CE, UL-FILE E227256, Vol.X1, BIS
	Page 330	Page 330	Page 330

	flush in metal	on metal*	metal-free (clear zone)	flush in metal	on metal*	metal-free (clear zone)	flush in metal	on metal*	metal-free (clear zone)
	0-3.5		0-4	0-4		0-4	0-4		0-4
	0-3		0-3.5	0-3.5		0-4	0-4		0-4
	0-5		0-6			0-7	0-4		0-4
	0-3.5		0-4	0-4		0-4	0-4		0-4
						0-11			
						0-18			
				0-6		0-13			
	0-5		0-6			0-7	0-4		0-4
						0-11			
						0-11			
	0-5		0-6	0-4		0-4	0-4		0-4
						0-13			

	BIS0019 BIS C-128-05/L	
Product Group	LF (70/455 kHz)	
Dimension	Ø 26 x 6 mm	
Antenna type	round	
Memory type	EEPROM	
User data, read/write	1023 Byte	
Storage temperature	-30...85 °C	
Storage temperature temporary	120 °C	
Ambient temperature	-30...70 °C	
Housing material	Epoxy-resin/fiberglass	
Protection degree	IP68	
Installation	metal-free (clear zone)	
Approval/Conformity	CE, UL-FILE E227256, Vol.X1, BIS	
Productview	Page 330	

Suitable read/write head with max. read/write working distance

Installation	flush in metal	on metal*	metal-free (clear zone)	
BIS C-305			0-6	
BIS C-310	0-8		0-13	
BIS C-315			0-18	
BIS C-322			0-6	
BIS C-323	0-8		0-13	
BIS C-324	0-8		0-13	
BIS C-326			0-15	

Dimensions in mm

* Installation on request

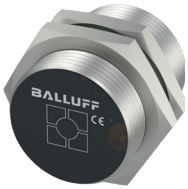

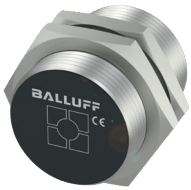

	BIS001C BIS C-128-11/L	BIS0006 BIS C-104-11/A	BIS0007 BIS C-104-32/A
	LF (70/455 kHz)	LF (70/455 kHz)	LF (70/455 kHz)
	Ø 26 x 6 mm	Ø 30 x 35 mm	Ø 30 x 35 mm
	round	round	round
	EEPROM	EEPROM	EEPROM
	2047 Byte	2047 Byte	8192 Byte
	-30...85 °C	-30...85 °C	-30...85 °C
	120 °C	—	—
	-30...70 °C	-30...70 °C	-30...70 °C
	Epoxy-resin/fiberglass	Brass	Brass
	IP68	IP67	IP67
	metal-free (clear zone) on metal flush in metal	metal-free (clear zone) on metal flush in metal	metal-free (clear zone) on metal flush in metal
	CE, UL-FILE E227256, Vol.X1, BIS	CE, UL-FILE E227256, Vol.X1, BIS	CE, UL-FILE E227256, Vol.X1, BIS
	Page 330	Page 330	Page 330

	flush in metal	on metal*	metal-free (clear zone)	flush in metal	on metal	metal-free (clear zone)*	flush in metal	on metal	metal-free (clear zone)*
			0-6						
	0-8		0-13	1-11	0-12		1-11	0-12	
			0-18	1-13	0-14		1-13	0-14	
			0-6						
	0-8		0-13	1-11	0-12		1-11	0-12	
	0-8		0-13	1-11	0-12		1-11	0-12	
			0-15						

	BIS000M BIS C-117-05/A
Product Group	LF (70/455 kHz)
Dimension	Ø 30 x 16 mm
Antenna type	round
Memory type	EEPROM
User data, read/write	1023 Byte
Storage temperature	-30...85 °C
Storage temperature temporary	—
Ambient temperature	-30...70 °C
Housing material	PBT
Protection degree	IP68
Installation	metal-free (clear zone)
Approval/Conformity	CE, UL-FILE E227256, Vol.X1, BIS
Productview	Page 331

Suitable read/write head with max. read/write working distance

Installation	flush in metal	on metal*	metal-free (clear zone)
BIS C-300			
BIS C-305	1-8		0-10
BIS C-306			
BIS C-310	1-12		0-13
BIS C-315	0-15		0-22
BIS C-319	0-13		0-16
BIS C-322	1-8		0-10
BIS C-323	1-12		0-13
BIS C-324			0-13
BIS C-325			
BIS C-326			

Dimensions in mm

* Installation on request

Use in vacuum

Use in vacuum

	BIS000N BIS C-117-05/L	BIS00J4 BIS C-140-05/L-M6	BIS00J2 BIS C-140-05/L-M8
	LF (70/455 kHz)	LF (70/455 kHz)	LF (70/455 kHz)
	Ø 30 x 16 mm	Ø 22 x 21 mm	Ø 22 x 21 mm
	round	round	round
	EEPROM	EEPROM	EEPROM
	1023 Byte	1023 Byte	1023 Byte
	-30...85 °C	-25...95 °C	-25...95 °C
	—	—	—
	-30...70 °C	-25...70 °C	-25...70 °C
	PBT	Steel, PA 12, GF30	Steel, PA 12, GF30
	IP68	—	—
	metal-free (clear zone)	metal-free (clear zone) on metal flush in metal	metal-free (clear zone) on metal flush in metal
	CE, UL-FILE E227256, Vol.X1, BIS	CE, UL-FILE E227256, Vol.X1, BIS	CE, UL-FILE E227256, Vol.X1, BIS
	Page 331	Page 331	Page 331

	flush in metal	on metal*	metal-free (clear zone)	flush in metal	on metal*	metal-free (clear zone)*	flush in metal	on metal*	metal-free (clear zone)*
				0-3			0-3		
			0-7	0-4.5			0-4.5		
				0-3			0-3		
			0-13	0-7			0-7		
			0-18						
	0-8		0-15						
			0-7						
			0-13	0-7			0-7		
			0-13	0-7			0-7		
				0-5			0-5		
			0-18						

Use in vacuum

	BIS00L9 BIS C-140-11/L-M10	
Product Group	LF (70/455 kHz)	
Dimension	Ø 22 x 21 mm	
Antenna type	round	
Memory type	EEPROM	
User data, read/write	2047 Byte	
Storage temperature	-25...95 °C	
Storage temperature temporary	—	
Ambient temperature	-25...70 °C	
Housing material	Steel, PA 12, GF30	
Protection degree	—	
Installation	metal-free (clear zone) on metal flush in metal	
Approval/Conformity	CE, UL-FILE E227256, Vol.X1, BIS	
Productview	Page 331	

Suitable read/write head with max. read/write working distance

Installation	flush in metal	on metal*	metal-free (clear zone)*	
BIS C-300	0-3			
BIS C-305	0-4.5			
BIS C-306	0-3			
BIS C-310	0-7			
BIS C-315				
BIS C-319				
BIS C-322				
BIS C-323	0-7			
BIS C-324	0-7			
BIS C-325	0-5			
BIS C-327				

Dimensions in mm

* Installation on request

Use in vacuum

	BIS00J1 BIS C-140-11/L-M8	BIS000C BIS C-108-05/L	BIS000H BIS C-108-11/L
	LF (70/455 kHz)	LF (70/455 kHz)	LF (70/455 kHz)
	Ø 22 x 21 mm	32 x 11 x 52 mm	32 x 11 x 52 mm
	round	round	round
	EEPROM	EEPROM	EEPROM
	2047 Byte	1023 Byte	2047 Byte
	-25...95 °C	-30...85 °C	-30...85 °C
	—	—	—
	-25...70 °C	-30...70 °C	-30...70 °C
	Steel, PA 12, GF30	PBT	PBT
	—	IP68	IP68
	metal-free (clear zone) on metal flush in metal	metal-free (clear zone) on metal flush in metal	metal-free (clear zone) on metal flush in metal
	CE, UL-FILE E227256, Vol.X1, BIS	CE, UL-FILE E227256, Vol.X1, BIS	CE, UL-FILE E227256, Vol.X1, BIS
	Page 331	Page 331	Page 331

	flush in metal	on metal*	metal-free (clear zone)*	flush in metal	on metal*	metal-free (clear zone)			
	0-3								
	0-4.5					0-6			0-6
	0-3								
	0-7			0-5		0-12	0-5		0-12
				0-10		2-16	0-10		2-16
				0-11		0-14	0-11		0-14
						0-6			0-6
	0-7					0-12			0-12
	0-7					0-12			0-12
	0-5								
						0-8			0-8

	BIS000K BIS C-108-32/L	
Product Group	LF (70/455 kHz)	
Dimension	32 x 11 x 52 mm	
Antenna type	round	
Memory type	EEPROM	
User data, read/write	8192 Byte	
Storage temperature	-30...85 °C	
Storage temperature temporary	—	
Ambient temperature	-30...70 °C	
Housing material	PBT	
Protection degree	IP68	
Installation	metal-free (clear zone) on metal flush in metal	
Approval/Conformity	CE, UL-FILE E227256, Vol.X1, BIS	
Productview	Page 331	

Suitable read/write head with max. read/write working distance

Installation	flush in metal	on metal*	metal-free (clear zone)	
BIS C-305			0-6	
BIS C-310	0-5		0-12	
BIS C-315	0-10		2-16	
BIS C-319	0-11		0-14	
BIS C-322			0-6	
BIS C-323			0-12	
BIS C-324			0-12	
BIS C-327			0-8	

Dimensions in mm

* Installation on request

	BIS0017 BIS C-127-05/L		
	LF (70/455 kHz)		
	53 x 4.8 x 85 mm		
	round		
	EEPROM		
	1023 Byte		
	-20...60 °C		
	—		
	0...60 °C		
	ABS		
	IP65		
	metal-free (clear zone)		
	CE, UL-FILE E227256, Vol.X1, BIS		
	Page 331		

	flush in metal*	on metal*	metal-free (clear zone)						
			10-30						

	BIS0028 BIS C-150-05/A	
Product Group	LF (70/455 kHz)	
Dimension	40 x 22 x 80 mm	
Antenna type	Rod	
Memory type	EEPROM	
User data, read/write	1023 Byte	
Storage temperature	-30...85 °C	
Storage temperature temporary	—	
Ambient temperature	-30...70 °C	
Housing material	POM	
Protection degree	IP68	
Installation	on metal	
Approval/Conformity	CE, UL-FILE E227256, Vol.X1, BIS	
Productview	Page 331	

Suitable read/write head with max. read/write working distance

Installation	flush in metal	on metal	metal-free (clear zone)	
BIS C-300				
BIS C-305				
BIS C-306				
BIS C-310				
BIS C-315				
BIS C-319				
BIS C-322				
BIS C-323				
BIS C-324				
BIS C-325				
BIS C-326				
BIS C-351		0-45		

Dimensions in mm

* Installation on request

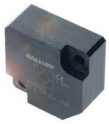

	BIS002A BIS C-150-11/A	BIS002E BIS C-150-32/A	BIS0021 BIS C-134-11/L
	LF (70/455 kHz)	LF (70/455 kHz)	LF (70/455 kHz)
	40 x 22 x 80 mm	40 x 22 x 80 mm	25 x 11 x 25 mm
	Rod	Rod	round
	EEPROM	EEPROM	EEPROM
	2047 Byte	8192 Byte	2047 Byte
	-30...85 °C	-30...85 °C	-30...85 °C
	—	—	—
	-30...70 °C	-30...70 °C	-30...70 °C
	POM	POM	PA 6.6, GF30, PU potting
	IP68	IP68	IP68
	on metal	on metal	metal-free (clear zone) flush in metal
	CE, UL-FILE E227256, Vol.X1, BIS	CE, UL-FILE E227256, Vol.X1, BIS	CE, UL-FILE E227256, Vol.X1, BIS
	Page 331	Page 331	Page 332

	flush in metal	on metal	metal-free (clear zone)	flush in metal	on metal	metal-free (clear zone)	flush in metal	on metal	metal-free (clear zone)
							0-3		
									0-6
							0-3		
									0-10
									0-16
									0-12
									0-6
									0-10
									0-10
									0-4
									0-12
		0-45			0-45				

	BIS002K BIS C-190-05/L	
Product Group	LF (70/455 kHz)	
Dimension	34 x 35 x 34 mm	
Antenna type	round	
Memory type	EEPROM	
User data, read/write	1023 Byte	
Storage temperature	-30...85 °C	
Storage temperature temporary	—	
Ambient temperature	-30...70 °C	
Housing material	PBT	
Protection degree	IP68	
Installation	metal-free (clear zone)	
Approval/Conformity	CE, UL-FILE E227256, Vol.X1, BIS	
Productview	Page 354	

Suitable read/write head with max. read/write working distance

Installation	flush in metal	on metal	metal-free (clear zone)	
BIS C-300				
BIS C-302				
BIS C-306				
BIS C-310			0-11	
BIS C-315			0-20	
BIS C-319				
BIS C-323			0-11	
BIS C-324			0-11	
BIS C-325				
BIS C-326			0-18	
BIS C-327				

Dimensions in mm

* Installation on request

	BIS002N BIS C-190-32/L	BIS002P BIS C-191-05/L	
	LF (70/455 kHz)	LF (70/455 kHz)	
	34 x 35 x 34 mm	24 x 21 x 24 mm	
	round	round	
	EEPROM	EEPROM	
	8192 Byte	1023 Byte	
	-30...85 °C	-30...85 °C	
	—	—	
	-30...70 °C	-30...70 °C	
	PBT	PBT	
	IP68	IP68	
	metal-free (clear zone)	metal-free (clear zone)	
	CE, UL-FILE E227256, Vol.X1, BIS	CE, UL-FILE E227256, Vol.X1, BIS	
	Page 354	Page 354	

	flush in metal	on metal	metal-free (clear zone)	flush in metal	on metal	metal-free (clear zone)	flush in metal	on metal	metal-free (clear zone)
						0-3.5			
						0-3			
						0-3.5			
			0-11			0-10			
			0-20						
						0-11			
			0-11			0-9			
			0-11			0-10			
						0-3.5			
			0-18						
			0-8						

	BIS002Y BIS C-122-04/L-ZC1	
Product Group	LF (70/455 kHz)	
Dimension	Ø 15 x 50 mm	
Antenna type	round	
Memory type	EEPROM	
User data, read/write	511 Byte	
Storage temperature	-30...85 °C	
Storage temperature temporary	—	
Ambient temperature	0...70 °C	
Housing material	POM, EP	
Protection degree	IP68	
Installation	metal-free (clear zone) on metal flush in metal	
Approval/Conformity	CE, UL-FILE E227256, Vol.X1, BIS	
Productview	Page 354	

Suitable read/write head with max. read/write working distance

Installation	flush in metal	on metal	metal-free (clear zone)*	
BIS C-300				
BIS C-302				
BIS C-305				
BIS C-306				
BIS C-310				
BIS C-315				
BIS C-319				
BIS C-322	0-2.5			
BIS C-323				
BIS C-324				
BIS C-325	0-2.5			
BIS C-326				

Dimensions in mm

* Installation on request

Use in vacuum

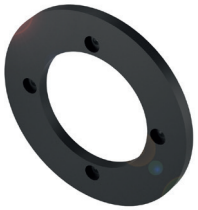

	BIS001H BIS C-130-05/L-SA1	BIS001Y BIS C-131-05/L	
	LF (70/455 kHz)	LF (70/455 kHz)	
	Ø 15.5 x 7 mm	Ø 125 x 7 mm	
	round	round	
	EEPROM	EEPROM	
	1023 Byte	1023 Byte	
	-30...85 °C	-30...85 °C	
	—	—	
	-30...70 °C	-30...70 °C	
	PBT	POM	
	IP68	IP67	
	metal-free (clear zone)	metal-free (clear zone)	
	CE, UL-FILE E227256, Vol.X1, BIS	CE, UL-FILE E227256, Vol.X1, BIS	
	Page 354	Page 354	

	flush in metal	on metal*	metal-free (clear zone)*	flush in metal	on metal*	metal-free (clear zone)	flush in metal*	on metal*	metal-free (clear zone)*
	0-4		0-4						
			0-4						
	0-6		0-7						
	0-4		0-4						
	0-8		0-8						
			0-8						
	0-7		0-13						
			0-7						
	0-8								
	0-8								
	0-4		0-8						
			0-12						

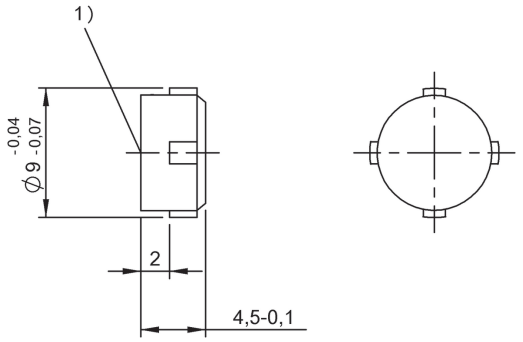

1) Sensing surface

BIS000T

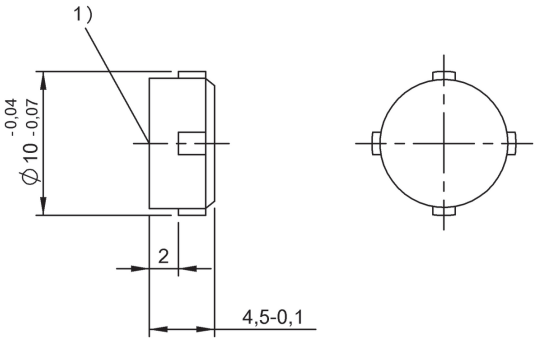

1) Sensing surface

BIS0011, BIS015W, BIS0015

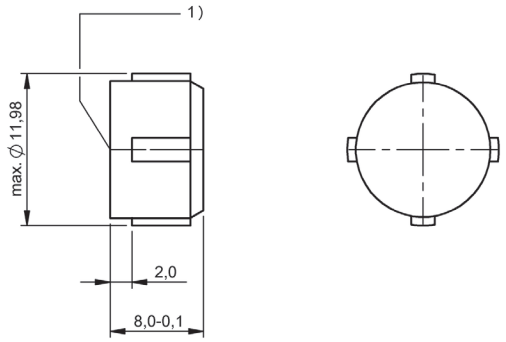

1) Sensing surface

BIS0004

1) Sensing surface

BIS0009

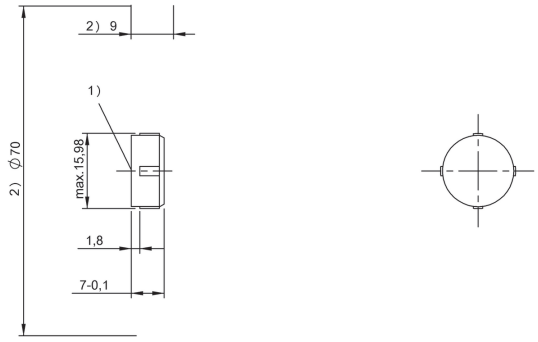

1) Sensing surface, 2) Clear zone

BIS001E

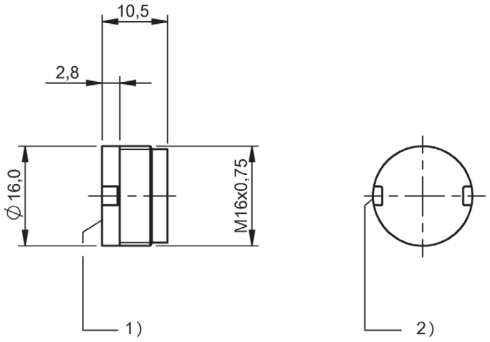

1) Sensing surface, 2) For mounting key 710691

BIS0002

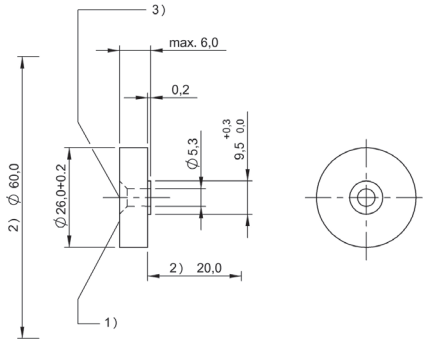

1) Sensing surface, 2) Clear zone, 3) Tightening torque max. 2.5 Nm

BIS0019, BIS001C

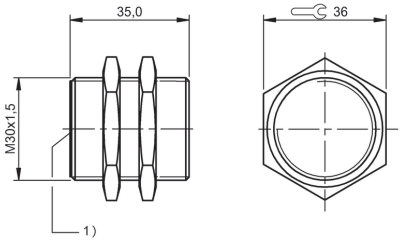

1) Sensing surface

BIS0006, BIS0007

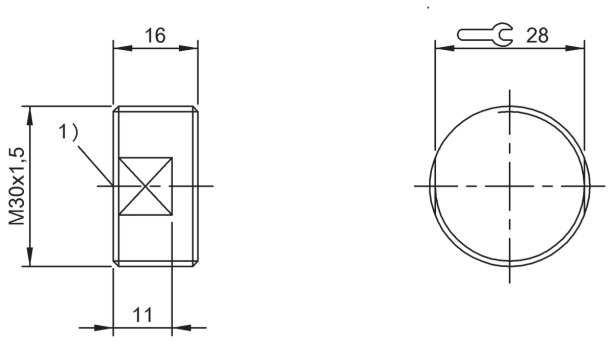

1) Sensing surface

BIS000M

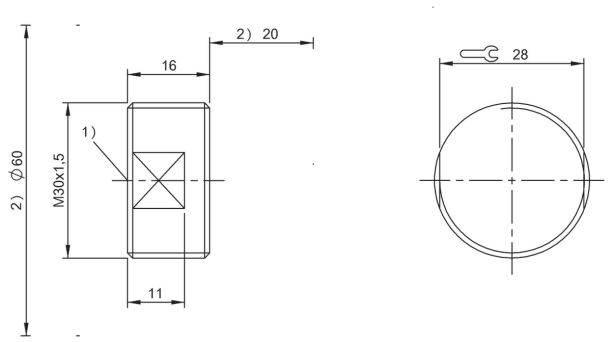

1) Sensing surface, 2) Clear zone

BIS000N

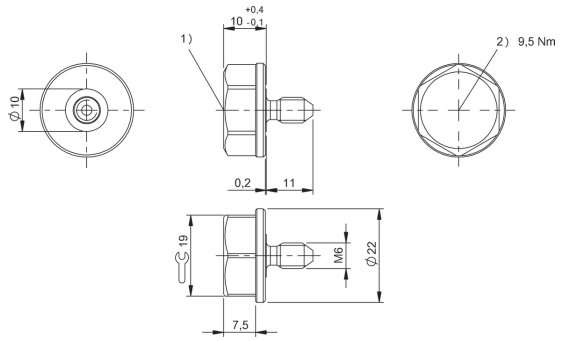

1) Sensing surface, 2) Tightening torque

BIS00J4

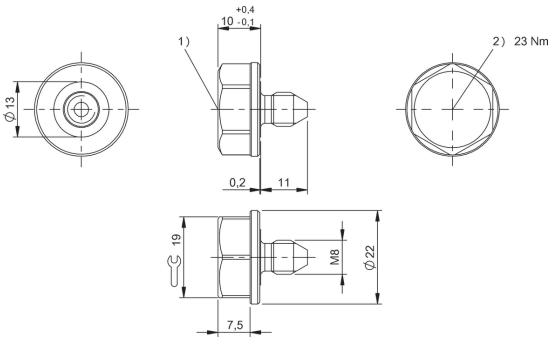

1) Sensing surface, 2) Tightening torque

BIS00J2, BIS00J1

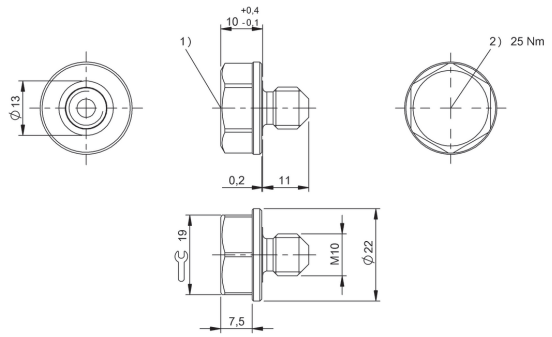

1) Sensing surface, 2) Tightening torque

BIS00L9

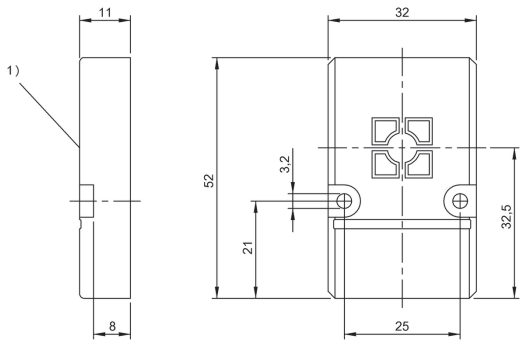

1) Sensing surface

BIS000C, BIS000H, BIS000K

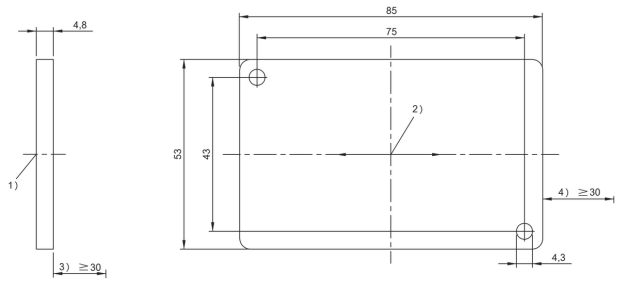

1) Sensing surface, 2) Read/write axis, 3) Clear zone, 4) Clear zone surrounding

BIS0017

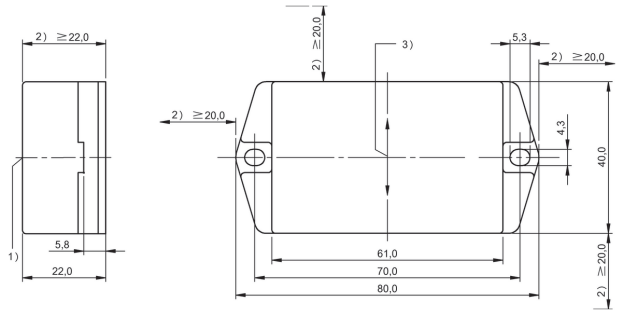

1) Sensing surface, 2) Clear zone, 3) Read/write axis

BIS0028, BIS002A, BIS002E

Do you need more details? Our Product Finder at www.balluff.com provides you with product-specific information, including technical drawings, data sheets, user guides and more for each individual product. All items are available for download.

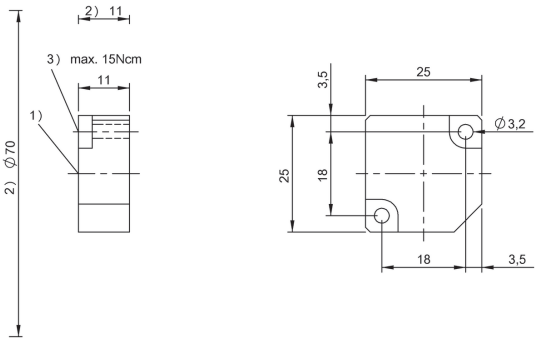

1) Sensing surface, 2) Clear zone, 3) Tightening torque

BIS0021

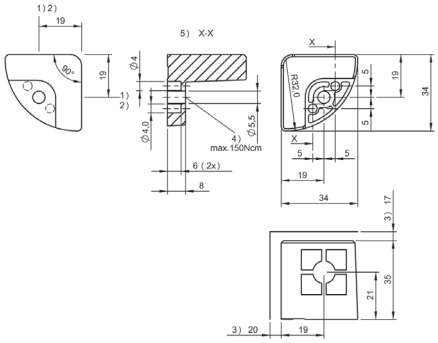

1) Sensing surface, 2) Do not use at same time, 3) Clear zone, 4) Tightening torque, 5) Cut-out

BIS002K, BIS002N

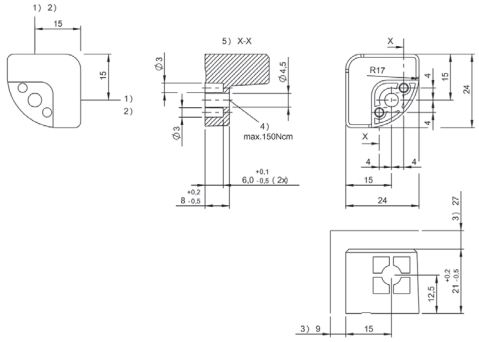

1) Sensing surface, 2) Do not use at same time, 3) Clear zone, 4) Tightening torque, 5) Cut-out

BIS002P

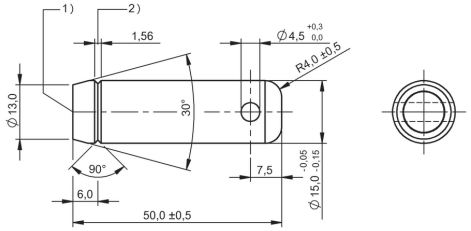

1) Sensing surface, 2) Notch

BIS002Y

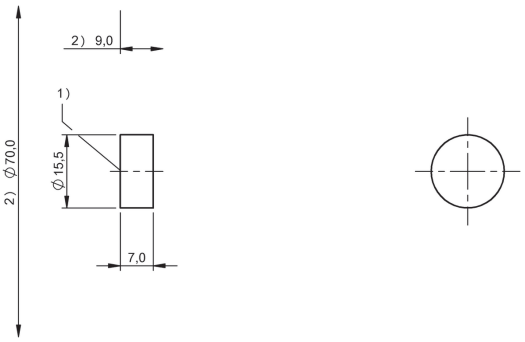

1) Sensing surface, 2) Clear zone

BIS001H

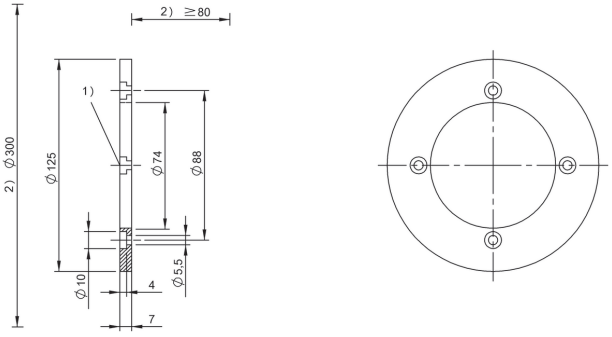

1) Sensing surface, 2) Clear zone

BIS001Y

1 m cable PU	**BIS00P5** BIS C-300-PU1-01
2 m cable PU	**BIS0138** BIS C-300-PU1-02
5 m cable PU	**BIS005Z** BIS C-300-PU1-05
10 m cable PU	**BIS00P6** BIS C-300-PU1-10
Product Group	LF (70/455 kHz)
Dimension	Ø 14.5 x 35 mm
Installation	metal-free (clear zone) on metal flush in metal
Antenna type	round
Connection	M12x1-Female
Housing material	Brass
Storage temperature	-20...85 °C
Ambient temperature	0...70 °C
Protection degree	IP67
Approval/Conformity	CE, UL-FILE E227256, Vol.X1, BIS

Appropriate data carrier

	BIS0002	BIS0004	BIS0009	BIS000T	BIS0011	BIS001E		BIS0021	BIS001H	BIS002P
Data carrier distance to metal	flush	flush	flush	flush	flush	flush	metal-free	flush	metal-free	metal-free
Working distance for writing	0-4	0-3.5	0-3.5	0-2	0-2.5	0-4	0-4	0-3	0-4	0-3.5
Working distance for reading	0-4	0-3.5	0-3.5	0-2	0-2.5	0-4	0-4	0-3	0-4	0-3.5
Offset at distance										
1	±3	±3	±3	±2	±2.5	±3.5	±5	±4	±5	±4
3	±2	±2	±2			±3	±4		±4	±3

Dimensions in mm

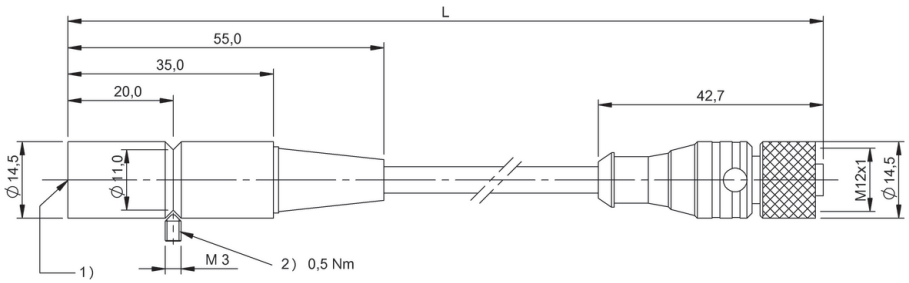

1) Sensing surface, 2) Tightening torque

	BIS00J4	BIS00J2	BIS00L9	BIS00J1
	metal-free	metal-free	metal-free	metal-free
	0-3	0-3	0-3	0-3
	0-3	0-3	0-3	0-3
	±3.5	±3.5	±3.5	±3.5
	±2	±2	±2	±2

5 m cable PU	**BIS00PA** BIS C-302-PU1-05
10 m cable PU	**BIS00P9** BIS C-302-PU1-10
Product Group	LF (70/455 kHz)
Dimension	40 x 33 x 61.5 mm
Installation	metal-free (clear zone) on metal flush in metal
Antenna type	round
Connection	M12x1-Female
Housing material	Aluminum, PA 6.6
Storage temperature	-20...85 °C
Ambient temperature	0...70 °C
Protection degree	IP67
Approval/Conformity	CE, UL-FILE E227256, Vol.X1, BIS

Appropriate data carrier

	BIS0002	BIS0004	BIS0009	BIS000T	BIS0011	BIS001E		BIS001H	BIS002P
Data carrier distance to metal	flush	flush	flush	flush	flush	flush	metal-free	metal-free	metal-free
Working distance for writing	0-4	0-3	0-3	0-1.5	0-2	0-3.5	0-4	0-4	0-3
Working distance for reading	0-4	0-3	0-3	0-1.5	0-2	0-3.5	0-4	0-4	0-3
Offset at distance									
1	±3	±3	±3	±1.5	±2	±3	±5	±5	±4
3	±2	±1.5	±1.5			±2	±3	±3	±2

Dimensions in mm

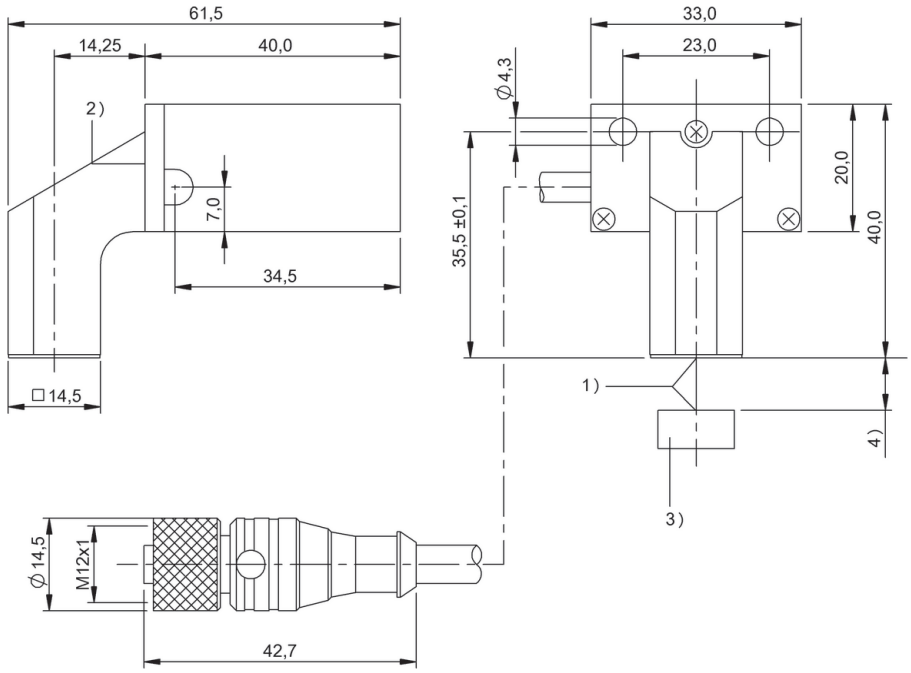

1) Sensing surface, 2) Mounting surface, 3) Data carrier, 4) Read range

	BIS00J4	BIS00J2	BIS00L9	BIS00J1
	metal-free	metal-free	metal-free	metal-free
	0-3	0-3	0-3	0-3
	0-3	0-3	0-3	0-3
	±3.5	±3.5	±3.5	±3.5
	±2	±2	±2	±2

Do you need more details? Our Product Finder at www.balluff.com provides you with product-specific information, including technical drawings, data sheets, user guides and more for each individual product. All items are available for download.

1 m cable PU	**BIS00PC** BIS C-306-PU1-01
10 m cable PU	**BIS00PE** BIS C-306-PU1-10
Product Group	LF (70/455 kHz)
Dimension	Ø 16 x 35 mm
Installation	metal-free (clear zone) on metal flush in metal
Antenna type	round
Connection	M12x1-Female
Housing material	Brass
Storage temperature	-20...85 °C
Ambient temperature	0...70 °C
Protection degree	IP67
Approval/Conformity	CE, UL-FILE E227256, Vol.X1, BIS

Appropriate data carrier

	BIS0002	BIS0004	BIS0009	BIS000T	BIS0011	BIS001E		BIS0021	BIS001H	BIS002P
Data carrier distance to metal	flush	flush	flush	flush	flush	flush	metal-free	flush	metal-free	metal-free
Working distance for writing	0-4	0-3.5	0-3.5	0-2	0-2.5	0-4	0-4	0-3	0-4	0-3.5
Working distance for reading	0-4	0-3.5	0-3.5	0-2	0-2.5	0-4	0-4	0-3	0-4	0-3.5
Offset at distance										
1	±3	±3	±3	±2	±2.5	±3.5	±5	±4	±5	±4
3	±2	±2	±2			±3	±4		±4	±3

Dimensions in mm

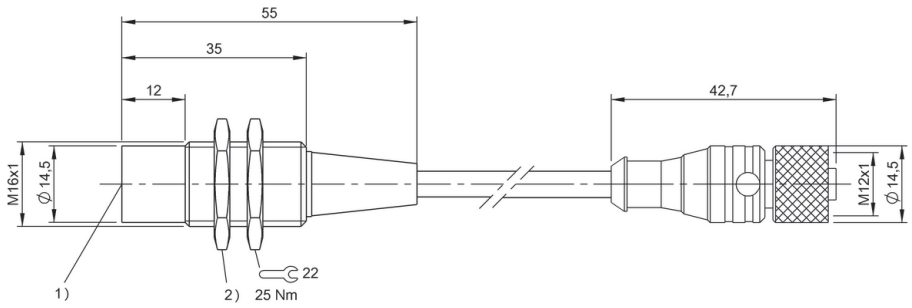

1) Sensing surface, 2) Tightening torque

	BIS00J4	BIS00J2	BIS00L9	BIS00J1
	metal-free	metal-free	metal-free	metal-free
	0-3	0-3	0-3	0-3
	0-3	0-3	0-3	0-3
	±3.5	±3.5	±3.5	±3.5
	±2	±2	±2	±2

1 m cable PU	**BIS0077** BIS C-319-PU1-01
5 m cable PU	**BIS0078** BIS C-319-PU1-05
10 m cable PU	**BIS0079** BIS C-319-PU1-10
Product Group	LF (70/455 kHz)
Dimension	Ø 18 x 80 mm
Installation	metal-free (clear zone)
Antenna type	round
Connection	M12x1-Female
Housing material	PBT, blue, nuts PA 6.6 black
Storage temperature	-20...85 °C
Ambient temperature	0...70 °C
Protection degree	IP67
Approval/Conformity	CE, UL-FILE E227256, Vol.X1, BIS

Appropriate data carrier

	BIS000C BIS000H BIS000K	BIS000N	BIS001E BIS001H	BIS0021	BIS002P
Data carrier distance to metal	metal-free	metal-free	metal-free	metal-free	metal-free
Working distance for writing	0-14	0-15	0-13	0-12	0-11
Working distance for reading	0-14	0-15	0-13	0-12	0-11
Offset at distance					
1	±12	±13	±9	±9	±9
3	±12	±12	±9	±9	±9
5	±11	±12	±9	±9	±9
7	±11	±11	±8.5	±8.5	±8
10	±9	±10	±7.5	±7.5	

Dimensions in mm

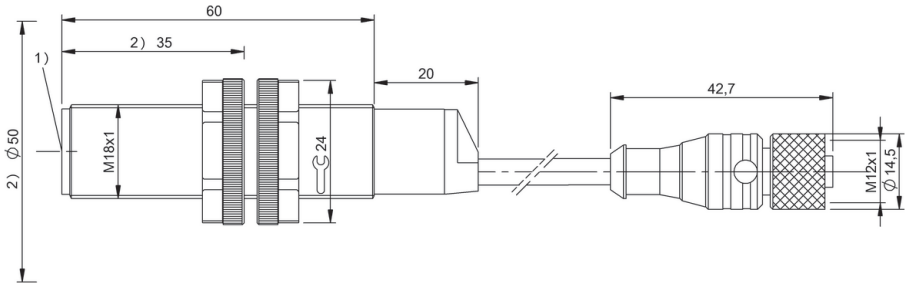

1) Sensing surface, 2) Clear zone

Do you need more details? Our Product Finder at www.balluff.com provides you with product-specific information, including technical drawings, data sheets, user guides and more for each individual product. All items are available for download.

For 5 m cable	**BIS007A** BIS C-319/05-S4
For 10 m cable	**BIS007C** BIS C-319/10-S4
Product Group	LF (70/455 kHz)
Dimension	Ø 18 x 86.5 mm
Installation	metal-free (clear zone)
Antenna type	round
Connection	M12x1 male
Housing material	PBT, blue, nuts PA 6.6 black
Storage temperature	-20...85 °C
Ambient temperature	0...70 °C
Protection degree	IP67
Approval/Conformity	CE, UL-FILE E227256, Vol.X1, BIS

Appropriate data carrier

	BIS000C BIS000H BIS000K	BIS000N	BIS001E BIS001H	BIS0021	BIS002P
Data carrier distance to metal	metal-free	metal-free	metal-free	metal-free	metal-free
Working distance for writing	0-14	0-15	0-13	0-12	0-11
Working distance for reading	0-14	0-15	0-13	0-12	0-11
Offset at distance					
1	±12	±13	±9	±9	±9
3	±12	±12	±9	±9	±9
5	±11	±12	±9	±9	±9
7	±11	±11	±8.5	±8.5	±8
10	±9	±10	±7.5	±7.5	

Dimensions in mm

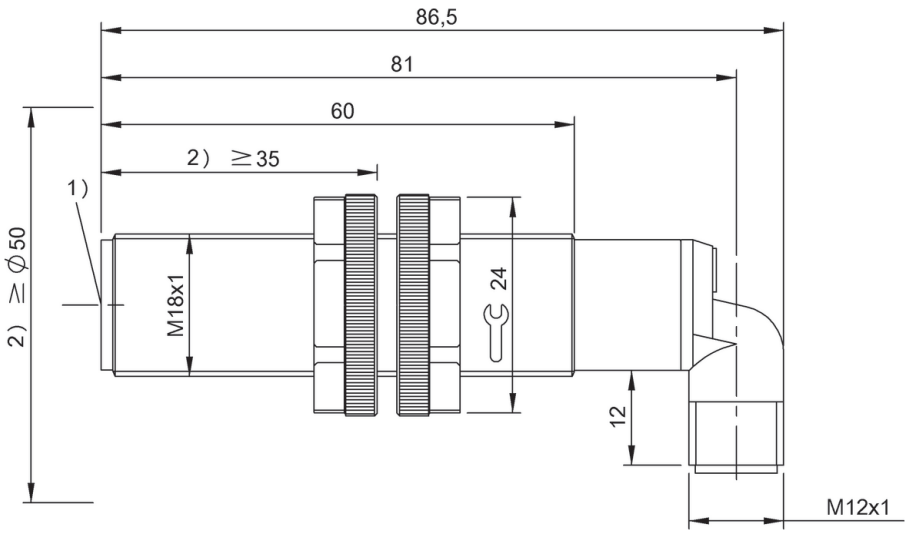

1) Sensing surface, 2) Clear zone

For 1 m cable	**BIS007P** BIS C-325/01-S4
For 5 m cable	**BIS007R** BIS C-325/05-S4
For 10 m cable	**BIS007T** BIS C-325/10-S4
Product Group	LF (70/455 kHz)
Dimension	Ø 18 x 45 mm
Installation	metal-free (clear zone) on metal flush in metal
Antenna type	round
Connection	M12x1 male
Housing material	Stainless steel (1.4571), stainless steel (1.4571)
Storage temperature	-20...85 °C
Ambient temperature	0...70 °C
Protection degree	IP67
Approval/Conformity	CE, UL-FILE E227256, Vol.X1, BIS

Appropriate data carrier

		BIS0002	BIS0011 BIS002Y BIS015W BIS0015	BIS001E	BIS001H	BIS0021	BIS002P	BIS00J2
Data carrier distance to metal		flush	flush	metal-free	metal-free	metal-free	metal-free	auf Metall
Working distance for writing		0-4	0-2.5	0-4	0-3	0-4	0-3	0-5
Working distance for reading		0-4	0-2.5	0-4	0-8	0-4	0-3.5	0-5
Offset at distance								
	1	±3.5	±2.5	±4	±4	±4	±4	
	2							±3
	3	±3		±2	±2	±2	±2	
	4							±2

Dimensions in mm

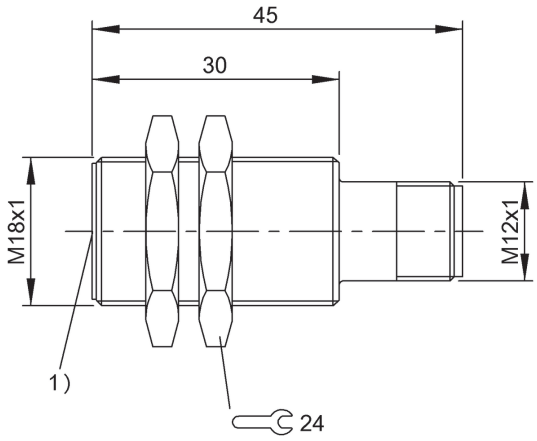

1) Sensing surface

1 m cable PU	**BIS00PF** BIS C-310-PU1-01
5 m cable PU	**BIS00PH** BIS C-310-PU1-05
10 m cable PU	**BIS00PJ** BIS C-310-PU1-10
Product Group	LF (70/455 kHz)
Dimension	Ø 30 x 70 mm
Installation	metal-free (clear zone)
Antenna type	round
Connection	M12x1-Female
Housing material	Brass
Storage temperature	-20...85 °C
Ambient temperature	0...70 °C
Protection degree	IP67
Approval/Conformity	CE, UL-FILE E227256, Vol.X1, BIS

Appropriate data carrier

	BIS0006		BIS0007		BIS000C BIS000H BIS000K	BIS000M	BIS000N	BIS0019		BIS001C		BIS001E
Data carrier distance to metal	flush	metal-free	flush	metal-free	metal-free	flush	metal-free	flush	metal-free	flush	metal-free	metal-free
Working distance for writing	1-11	0-12	1-11	0-12	0-12	1-12	0-13	0-8	0-13	0-8	0-13	0-11
Working distance for reading	1-11	0-12	1-11	0-12	0-12	1-12	0-13	0-8	0-13	0-8	0-13	0-11
Offset at distance												
1	±7.5	±7.5	±7.5	±7.5	±10	±7.5	±11	±8	±10	±8	±10	±9
3	±7	±7	±7	±7	±9	±7.5	±10	±7	±10	±7	±10	±8
5	±7	±7	±7	±7	±9	±7	±10	±6.5	±9	±6.5	±9	±7
7	±7	±7	±7	±7	±8.5	±6.5	±9.5	±5.5	±9	±5.5	±9	±5
10												

Dimensions in mm

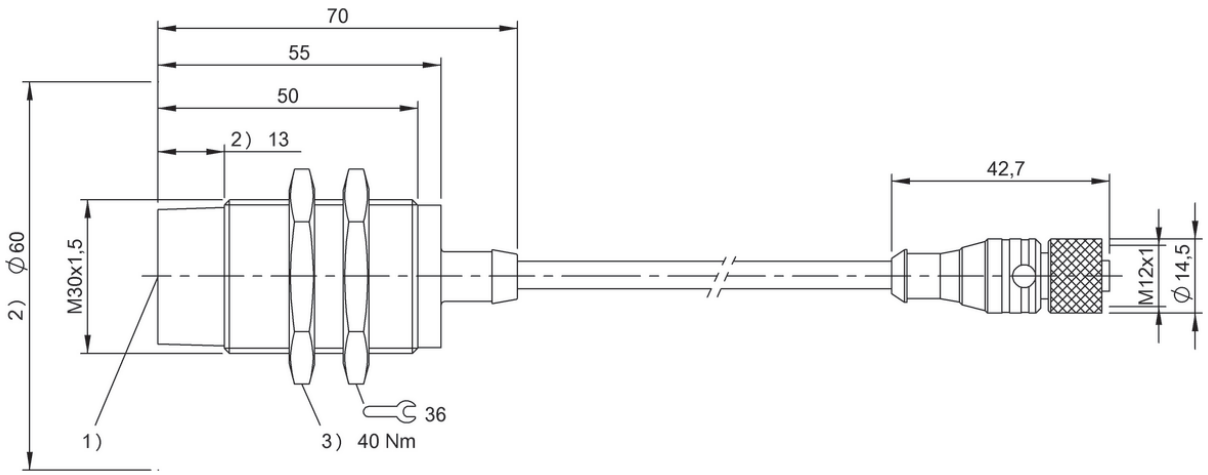

1) Sensing surface, 2) Clear zone, 3) Tightening torque

	BIS001H	BIS0021	BIS002K BIS002N	BIS002P
	metal-free	metal-free	metal-free	metal-free
	0-8	0-10	0-11	0-10
	0-8	0-10	0-11	0-10
	±6.5	±9	±10	±8
	±6	±8	±9	±7.5
	±5.5	±7	±9	±7
		±4	±8	±6.5
			±6.5	

Do you need more details? Our Product Finder at www.balluff.com provides you with product-specific information, including technical drawings, data sheets, user guides and more for each individual product. All items are available for download.

For 1 m cable	**BIS007J** BIS C-323/01-S4
For 5 m cable	**BIS007K** BIS C-323/05-S4
For 10 m cable	**BIS007L** BIS C-323/10-S4
Product Group	LF (70/455 kHz)
Dimension	Ø 30 x 70.5 mm
Installation	metal-free (clear zone)
Antenna type	round
Connection	M12x1 male
Housing material	1.4305 stainless steel
Storage temperature	-20...85 °C
Ambient temperature	0...70 °C
Protection degree	IP67
Approval/Conformity	CE, UL-FILE E227256, Vol.X1, BIS

Appropriate data carrier

	BIS0006 BIS0007		BIS000C BIS000H BIS000K		BIS000M		BIS000N		BIS0019 BIS001C		BIS001E		BIS001H		BIS0021		
Data carrier distance to metal	flush	metal-free	metal-free		flush		metal-free		flush	metal-free	metal-free		flush		metal-free		
Working distance for writing	1-11	0-12	0-12		1-12		0-13		0-8	0-13	0-11		0-8		0-10		
Working distance for reading	1-11	0-12	0-12		1-12		0-13		0-8	0-13	0-11		0-8		0-10		
Offset at distance																	
1	±7.5	±7.5	±10		±7.5		±11		±8	±10	±9		±6.5		±9		
3	±7	±7	±9		±7.5		±10		±7	±10	±8		±6		±8		
5	±7	±7	±9		±7		±10		±6.5	±9	±7		±5.5		±7		
7	±7	±7	±8.5		±6.5		±9.5		±5.5	±9	±5				±4		
10																	

Dimensions in mm

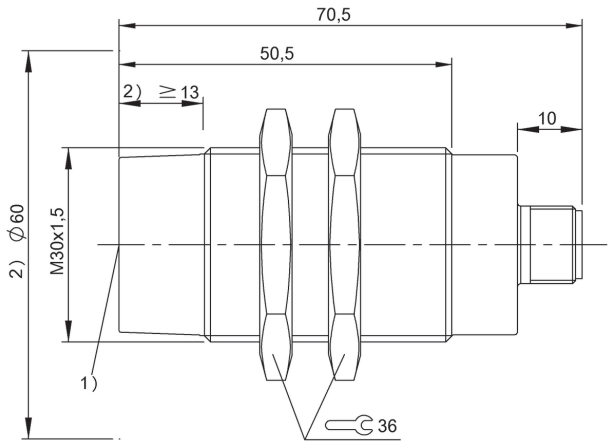

1) Sensing surface, 2) Clear zone

	BIS0026	BIS002K BIS002N	BIS002P
	metal-free	metal-free	metal-free
	0-9	0-11	0-9
	0-9	0-11	0-9
	±8	±10	±8
	±7	±9	±7.5
	±5	±9	±7
		±8	±6.5
		±6.5	

Do you need more details? Our Product Finder at www.balluff.com provides you with product-specific information, including technical drawings, data sheets, user guides and more for each individual product. All items are available for download.

1 m cable PU	**BIS0066** BIS C-305-PU1-01
5 m cable PU	**BIS0067** BIS C-305-PU1-05
10 m cable PU	**BIS0068** BIS C-305-PU1-10
Product Group	LF (70/455 kHz)
Dimension	25 x 10 x 50 mm
Installation	metal-free (clear zone) on metal flush in metal
Antenna type	round
Connection	M12x1-Female
Housing material	ABS, GF16
Storage temperature	-20...85 °C
Ambient temperature	0...70 °C
Protection degree	IP67
Approval/Conformity	CE, UL-FILE E227256, Vol.X1, BIS

Appropriate data carrier

	BIS0002	BIS0004 BIS0009	BIS000C BIS000H BIS000K	BIS000M		BIS000N	BIS000T	BIS0011	BIS0019
Data carrier distance to metal	flush	flush	metal-free	flush	metal-free	metal-free	flush	flush	metal-free
Freizone Datenträger									
Working distance for writing	0-4	0-5	0-6	1-8	0-10	0-7	0-2	0-2.5	0-6
Working distance for reading	0-4	0-5	0-6	1-8	0-10	0-7	0-2	0-2.5	0-6
Offset at distance									
1	±3	±4	±8	±5	±6	±8.5	±2	±3	±8
3	±2	±3	±7	±4	±6	±7.5		±2	±7
5			±5	±5	±6	±6			±5
7				±2	±5	±4			
10					±3				

Dimensions in mm

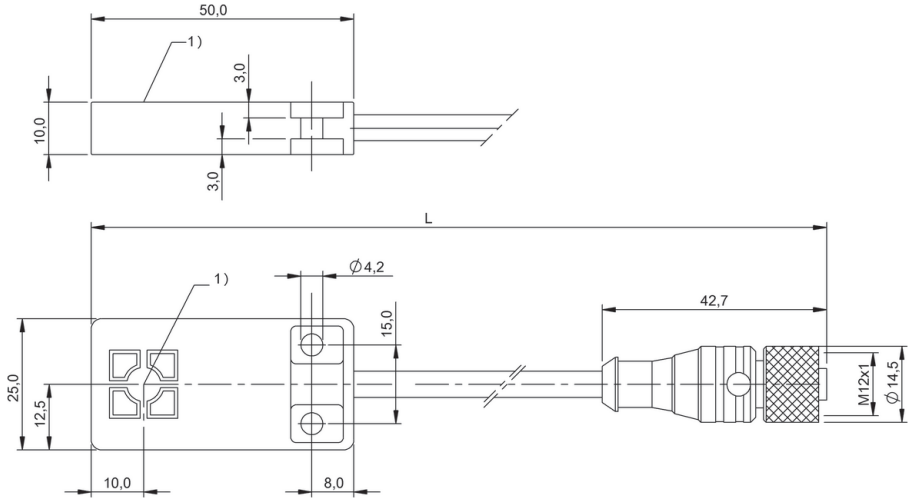

1) Sensing surface

	BIS001E BIS001H	BIS0021	BIS00J4 BIS00J2
	metal-free	metal-free	metal-free
	0-7	0-6	0-4.5
	0-7	0-6	0-4.5
	±5	±5	±4.5
	±5	±5	±3.5
	±4	±4	
	±2		

Do you need more details? Our Product Finder at www.balluff.com provides you with product-specific information, including technical drawings, data sheets, user guides and more for each individual product. All items are available for download.

5 m cable PU	**BIS007H** BIS C-322-PU1-05
Product Group	LF (70/455 kHz)
Dimension	25 x 10 x 50 mm
Installation	metal-free (clear zone) on metal flush in metal
Antenna type	round
Connection	M12x1-Female
Housing material	ABS, GF16
Storage temperature	-20...85 °C
Ambient temperature	0...70 °C
Protection degree	IP67
Approval/Conformity	CE, UL-FILE E227256, Vol.X1, BIS

Appropriate data carrier

	BIS0002		BIS0004 BIS0009		BIS000C BIS000H BIS000J BIS000K		BIS000M		BIS000N		BIS000T		BIS0011		BIS002Y		
Data carrier distance to metal	flush		flush		metal-free		flush	metal-free	metal-free		flush		flush		flush		
Working distance for writing	0-4		0-5		0-6		1-8	0-10	0-7		0-2		0-2.5		0-2.5		
Working distance for reading	0-4		0-5		0-6		1-8	0-10	0-7		0-2		0-2.5		0-2.5		
Offset at distance																	
0.7																	
1	±3		±4		±8		±5	±6	±8.5		±2		±3		±3		
3	±2		±3		±7		±4	±6	±7.5				±2		±2		
4	±2																
5					±5		±3	±6	±6								
7								±5	±4								
10								±3									

Dimensions in mm

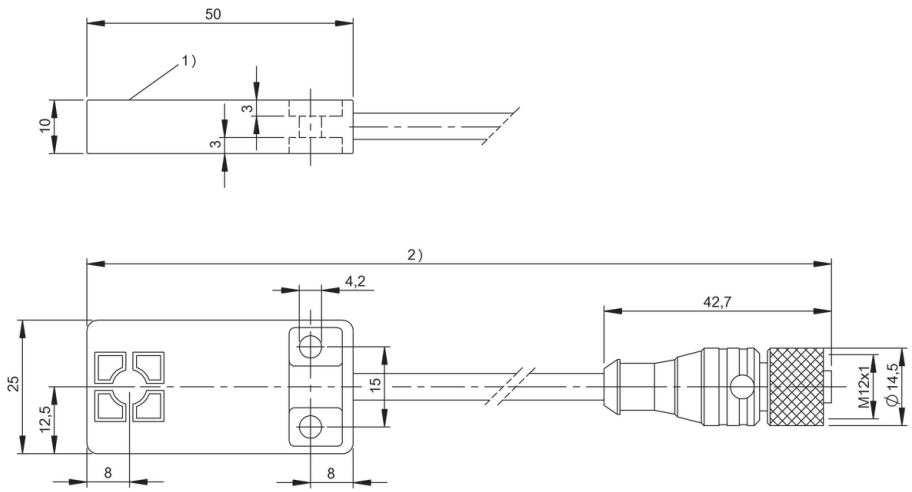

1) Sensing surface, 2) Cable length see text

	BIS0019	BIS001E BIS001H	BIS0021
	metal-free	metal-free	metal-free
	0-6	0-7	0-6
	0-6	0-7	0-6
	±8	±5	±5
	±7	±5	±5
	±5	±4	±4
		±2	

Do you need more details? Our Product Finder at www.balluff.com provides you with product-specific information, including technical drawings, data sheets, user guides and more for each individual product. All items are available for download.

1 m cable PU	**BIS00PK** BIS C-315-PU1-01
5 m cable PU	**BIS00PL** BIS C-315-PU1-05
10 m cable PU	**BIS00PM** BIS C-315-PU1-10
Product Group	LF (70/455 kHz)
Dimension	80 x 40 x 80 mm
Installation	metal-free (clear zone) on metal flush in metal
Antenna type	round
Connection	M12x1-Female
Housing material	Brass
Storage temperature	-20...85 °C
Ambient temperature	0...70 °C
Protection degree	IP67
Approval/Conformity	CE, UL-FILE E227256, Vol.X1, BIS

Appropriate data carrier

	BIS0006 BIS0007	BIS000C BIS000H BIS000K	BIS000M	BIS000N	BIS0017	BIS0019 BIS001C	BIS001E	BIS001H
Data carrier distance to metal	flush	metal-free	flush	metal-free	metal-free	metal-free	metal-free	metal-free
Freizone Datenträger								
Working distance for writing	1-13	2-16	0-15	0-18	10-30	0-18	0-18	0-8
Working distance for reading	1-13	2-16	0-15	0-18	10-30	0-18	0-18	0-8
Offset at distance								
1	±15		±15	±17		±17	±16	±6.5
2		±15						
3	±14	±14	±15	±17		±17	±16	±6
5	±11	±12	±14	±17		±17	±16	±5.5
7	±10	±11	±12	±15		±15	±14	
10	±8	±8	±12	±15	±30	±15	±14	
15				±14	±27	±14	±11	
20					±20			

Dimensions in mm

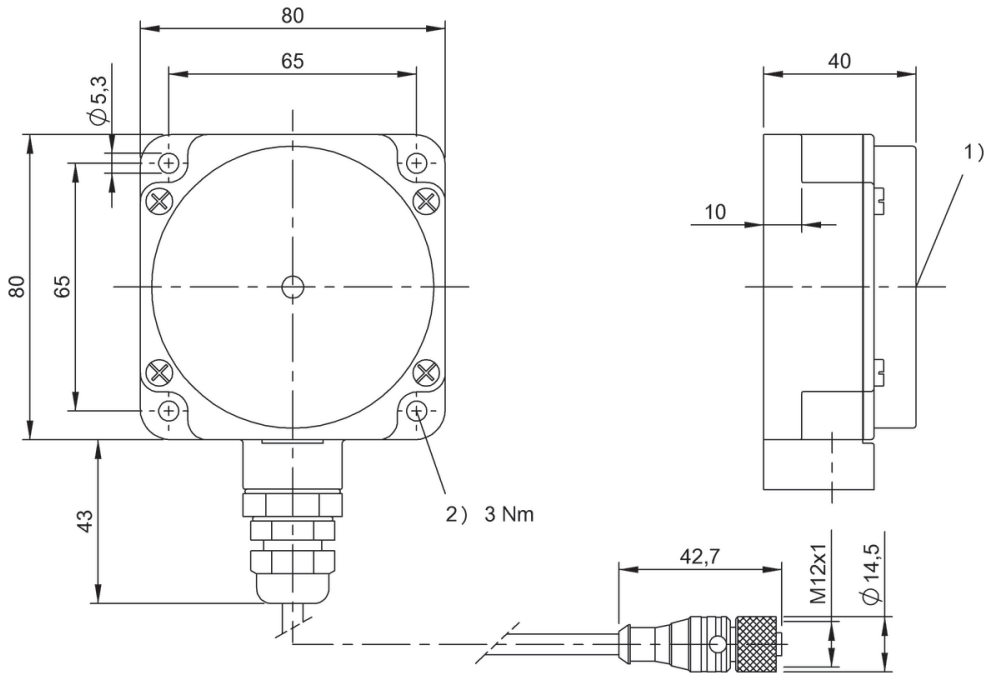

1) Sensing surface, 2) Tightening torque

	BIS0021	BIS002K BIS002N
	metal-free	metal-free
	0-16	0-20
	0-16	0-20
	±16	±18
	±16	±18
	±16	±18
	±14	±18
	±12	±18
		±16

Do you need more details? Our Product Finder at www.balluff.com provides you with product-specific information, including technical drawings, data sheets, user guides and more for each individual product. All items are available for download.

For 5 m cable	**BIS006Y** BIS C-315/05-S4
For 10 m cable	**BIS006Z** BIS C-315/10-S4
Product Group	LF (70/455 kHz)
Dimension	80 x 40 x 80 mm
Installation	metal-free (clear zone) on metal flush in metal
Antenna type	round
Connection	M12x1 male
Housing material	PBT
Storage temperature	-20...85 °C
Ambient temperature	0...70 °C
Protection degree	IP67
Approval/Conformity	CE, UL-FILE E227256, Vol.X1, BIS

Appropriate data carrier

	BIS0006 BIS0007	BIS000C BIS000H BIS000K	BIS000M	BIS000N	BIS0017	BIS0019 BIS001C	BIS001E	BIS001H
Data carrier distance to metal	flush	metal-free	flush	metal-free	metal-free	metal-free	metal-free	metal-free
Working distance for writing	1-13	2-16	0-15	0-18	10-30	0-18	0-18	0-8
Working distance for reading	1-13	2-16	0-15	0-18	10-30	0-18	0-18	0-8
Offset at distance								
1	±15		±15	±17		±17	±16	±6.5
2		±15						
3	±14	±14	±15	±17		±17	±16	±6
5	±11	±12	±14	±17		±17	±16	±5.5
7	±10	±11	±12	±15		±15	±14	
10	±8	±8	±12	±15	±30	±15	±14	
15				±14	±27	±14	±11	
20					±20			

Dimensions in mm

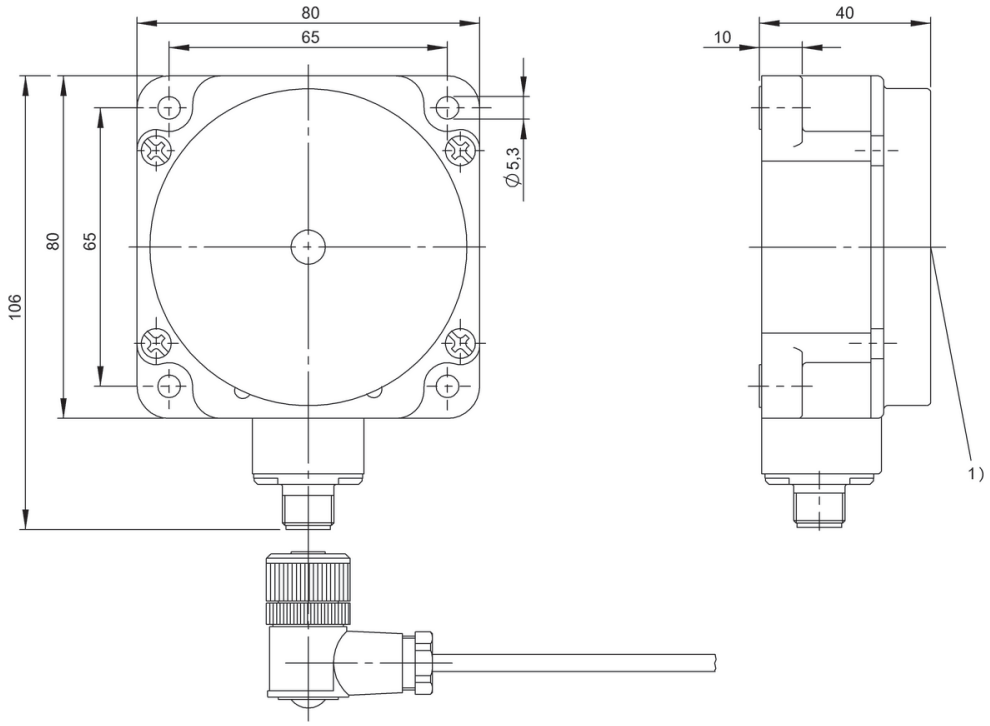

1) Sensing surface

	BIS0021	BIS002K BIS002N
	metal-free	metal-free
	0-16	0-20
	0-16	0-20
	±16	±18
	±16	±18
	±16	±18
	±14	±18
	±12	±18
		±16

Do you need more details? Our Product Finder at www.balluff.com provides you with product-specific information, including technical drawings, data sheets, user guides and more for each individual product. All items are available for download.

5 m cable PU	**BIS00PN** BIS C-351-PU1-05
10 m cable PU	**BIS00PP** BIS C-351-PU1-10
Product Group	LF (70/455 kHz)
Dimension	80 x 50 x 170 mm
Installation	metal-free (clear zone)
Antenna type	Rod
Connection	M12x1-Female
Housing material	POM, mounting plate aluminum
Storage temperature	-20...85 °C
Ambient temperature	0...70 °C
Protection degree	IP67
Approval/Conformity	CE, UL-FILE E227256, Vol.X1, BIS

Appropriate data carrier

	BIS0028 BIS002A BIS002E
Data carrier distance to metal	metal-free
Working distance for writing	0-45
Working distance for reading	0-45
Offset at distance	
1	±15
2	±15
3	±15
4	±15
5	±15
6	±15
10	±15
20	±15

Dimensions in mm

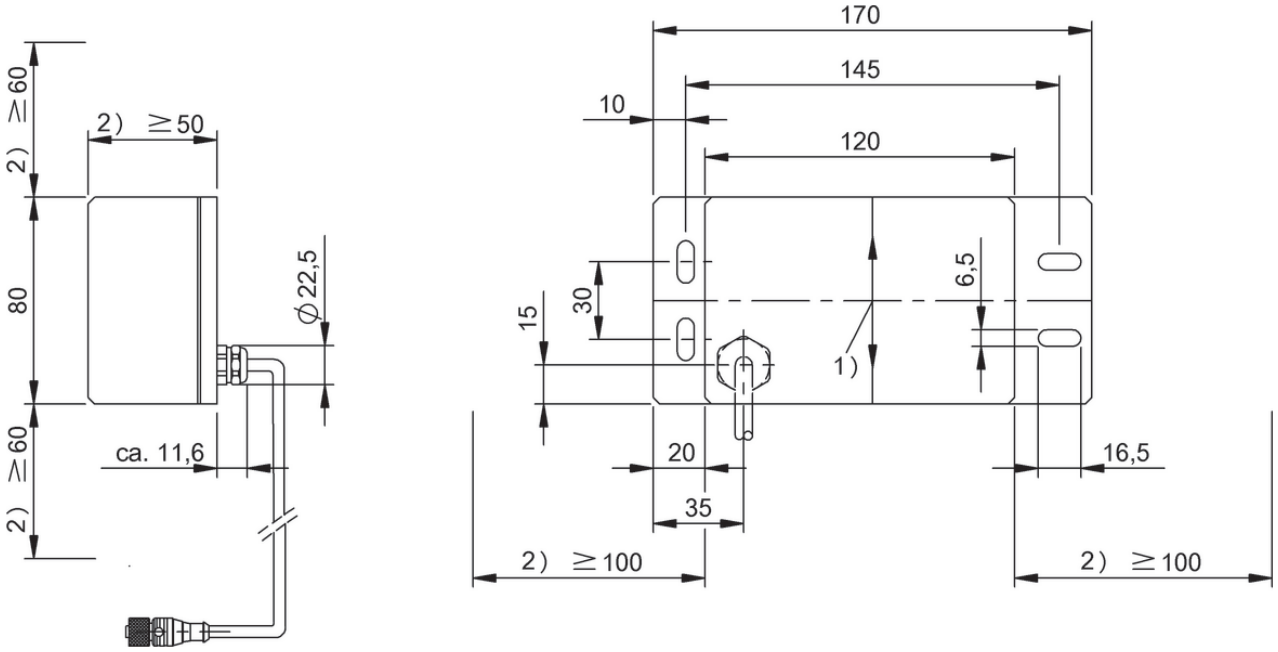

1) Sensing surface, 2) Clear zone

	BAM012C BIS C-300-ZA1
Product Group	LF (70/455 kHz)
Dimension	Ø 40 x 45 mm
Installation	—
Antenna type	—
Connection	—
Housing material	—
Storage temperature	-20...85 °C
Ambient temperature	0...70 °C
Protection degree	—
Approval/Conformity	CE

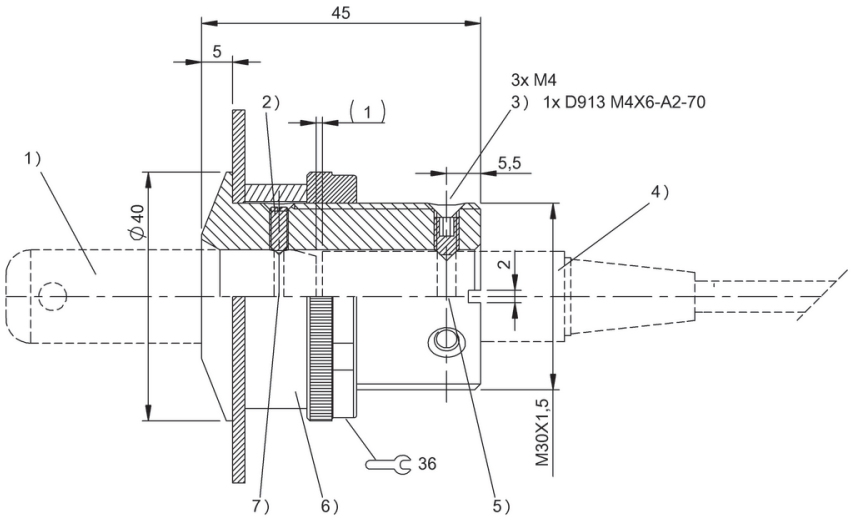

1) Data carrier, 2) Spring-loaded compression piece, 3) Threaded pin, 4) Read/write head, 5) Notch in read/write head, 6) Spacer ring, 7) Notch in data carrier

Do you need more details? Our Product Finder at www.balluff.com provides you with product-specific information, including technical drawings, data sheets, user guides and more for each individual product. All items are available for download.

0.7 m cable	**BIS00JA** BIS C-380-01/10-00,7	
1 m cable		
1,5 m cable		
5 m cable		
Style 1	M12x1	
Style 2	M30x1.5	
Antenna type	round	
Storage temperature	-20...85 °C	
Ambient temperature	0...70 °C	
Housing material	Brass, nuts nickel plated brass	
Protection degree	IP67	
Installation	metal-free (clear zone)	
Approval/Conformity	CE	
Productview	Page 364	

Appropriate data carrier

	BIS0002 **BIS0004** **BIS0009** **BIS000T** **BIS0011**	
Installation	flush	
Appropriate read/write head	BIS00P5	
	BIS005Z	
	BIS00P6	

	BIS00JJ BIS C-380-06/06-01	**BIS00JP** BIS C-380-10/10-01
	BIS00JK BIS C-380-06/06-01,5	
	BIS00N9 BIS C-380-06/06-05	**BIS00JR** BIS C-380-10/10-05
	M16x1	M30x1.5
	M16x1	M30x1.5
	round	round
	-20...85 °C	-20...85 °C
	0...70 °C	0...70 °C
	Brass, nuts nickel plated brass	Brass, nuts nickel plated brass
	IP67	IP67
	metal-free (clear zone) on metal flush in metal	metal-free (clear zone)
	CE	CE
	Page 364	Page 365

	BIS0002 **BIS0004** **BIS0009** **BIS000T** **BIS0011**	**BIS000N** **BIS001E** **BIS C-104-xx/A** **BIS C-108-xx/L** **BIS C-128-xx/L**
	flush	metal-free
	BIS00P5	BIS00PF
	BIS005Z	BIS00PH
	BIS00P6	BIS00PJ

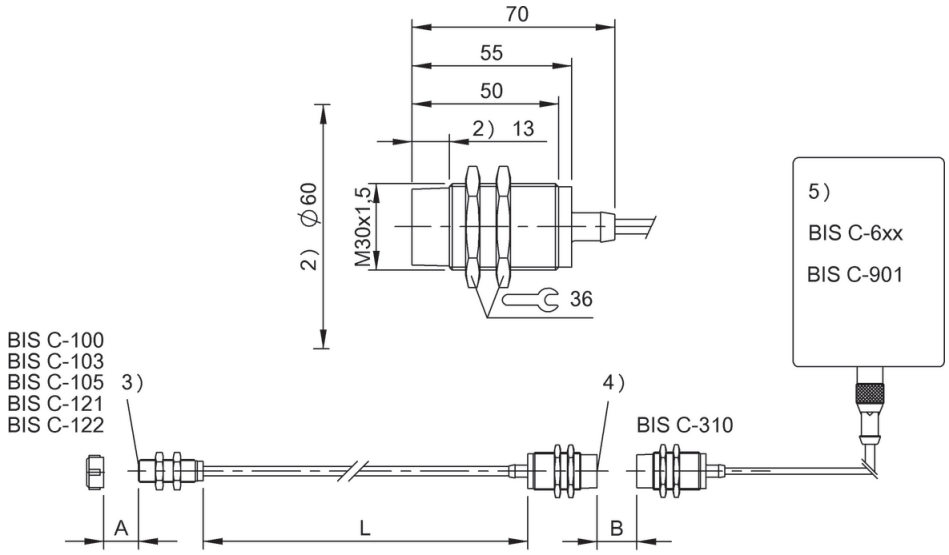

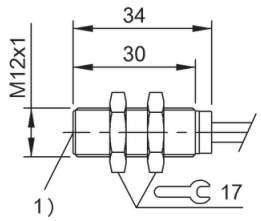

1) Sensing surface, 2) Clear zone, 3) Active surface data carrier, 4) Active surface R/W head, 5) Processor or converter, 6) see remarks

BIS00JA

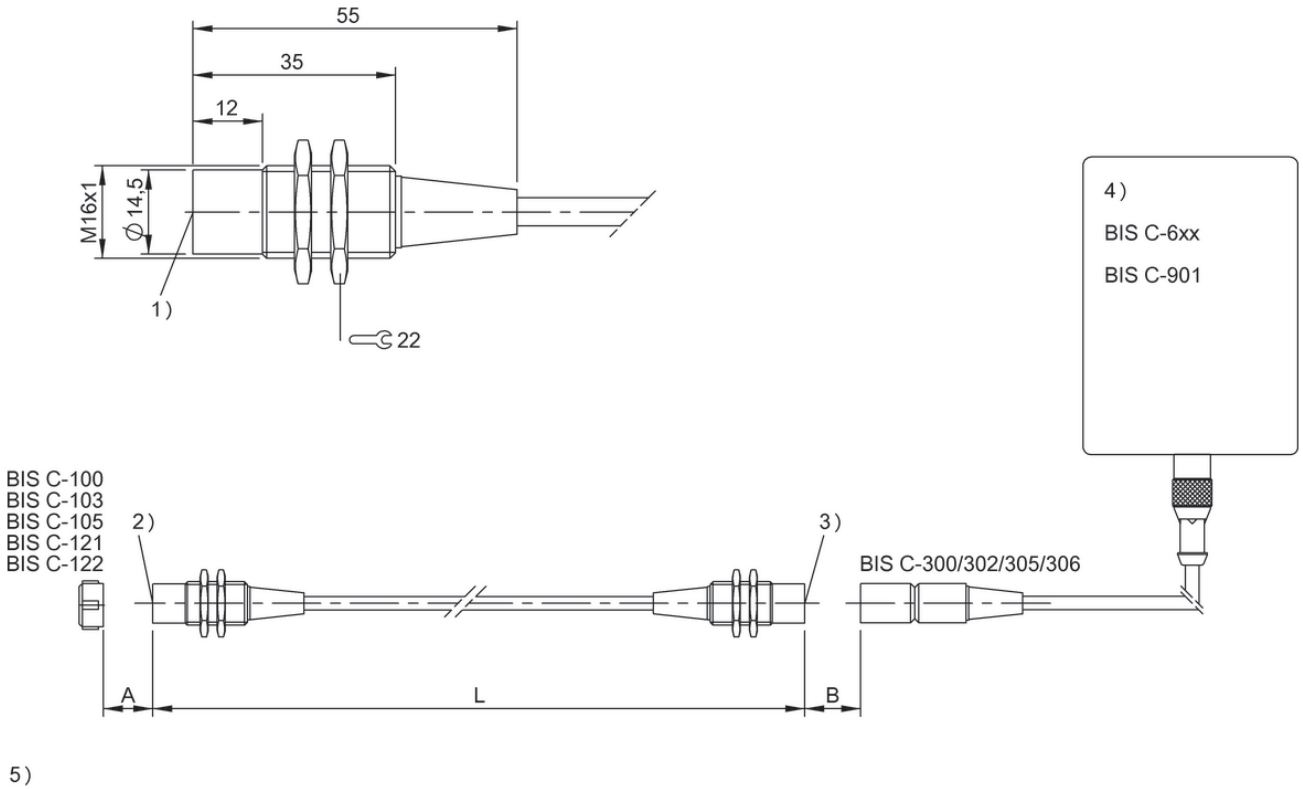

1) Sensing surface, 2) Active surface data carrier, 3) Active surface R/W head, 4) Processor or converter, 5) see remarks

BIS00JJ, BIS00JK, BIS00N9

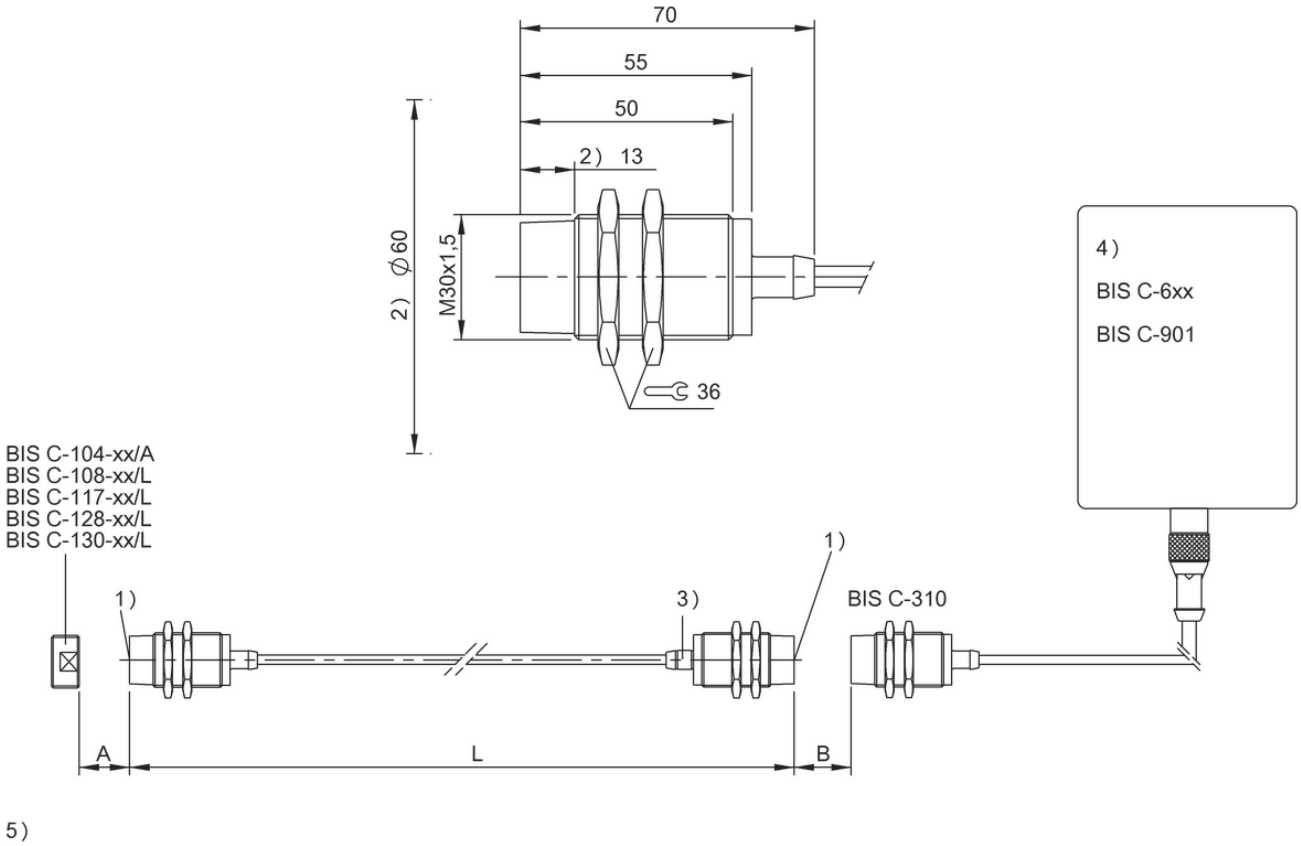

1) Sensing surface, 2) Clear zone, 3) Yellow marking, 4) Processor or converter, 5) see remarks

BIS00JP, BIS00JR

	BIS013W BIS V-6108-048-C102	
Product Group	Multi-Frequency Processor	
Interface	Profinet I/O (IRT), Profinet I/O (IRT) 2-port switch	
Supported RFID technologies	LF 125 kHz (BIS VL), LF 70/455 kHz (BIS C), HF 13.56 MHz (BIS VM), UHF 860/960 MHz (BIS VU)	
Number of connectable R/W heads / antennas	4	
Operating voltage Ub	24 V DC LPS Class 2	
Housing material	Zinc, Die casting	
Ambient temperature	0...60 °C	
IP rating	IP65, with connector	
Approval/Conformity	CE, EAC, cULus, WEEE	
Connection	2x M12x1-Female, 4-pin, D-coded 7/8“-Male, 5-pin	
Productview	Page 378	

	BIS012E BIS V-6102-019-C101	BIS0187 BIS V-6107-039-C105	BIS018K BIS V-6107-039-C106
	Multi-Frequency Processor	Multi-Frequency Processor	Multi-Frequency Processor
	Profibus DP Slave galvanically isolated	Ethernet TCP/IP, USB	Ethernet TCP/IP, USB
	LF 125 kHz (BIS VL), LF 70/455 kHz (BIS C), HF 13.56 MHz (BIS VM), UHF 860/960 MHz (BIS VU)	LF 125 kHz (BIS VL), LF 70/455 kHz (BIS C), HF 13.56 MHz (BIS VM), UHF 860/960 MHz (BIS VU)	LF 125 kHz (BIS VL), LF 70/455 kHz (BIS C), HF 13.56 MHz (BIS VM), UHF 860/960 MHz (BIS VU)
	4	4	4
	24 V DC LPS Class 2	24 V DC LPS Class 2	24 V DC LPS Class 2
	Zinc, Die casting	Zinc, Die casting	Zinc, Die casting
	0...60 °C	0...60 °C	0...60 °C
	IP65, with connector	IP65, with connector	IP65, with connector
	CE, EAC, cULus, WEEE	CE, EAC, cULus, WEEE	CE, EAC, cULus, WEEE
	M12x1-Male, 5-pin, B-coded M12x1-Female, 5-pin, B-coded 7/8“-Male, 5-pin	M12x1-Female, 4-pin, D-coded M12x1-Female, 5-pin, A-coded 7/8“-Male, 5-pin	M12x1-Female, 4-pin, D-coded M12x1-Female, 5-pin, A-coded 7/8“-Male, 4-pin
	Page 378	Page 379	Page 379

	BIS014C BIS V-6106-034-C102
Product Group	Multi-Frequency Processor
Interface	Ethernet/IP
Supported RFID technologies	LF 125 kHz (BIS VL), LF 70/455 kHz (BIS C), HF 13.56 MHz (BIS VM), UHF 860/960 MHz (BIS VU)
Number of connectable R/W heads / antennas	4
Operating voltage Ub	24 V DC LPS Class 2
Housing material	Zinc, Die casting
Ambient temperature	0...60 °C
IP rating	IP65, with connector
Approval/Conformity	CE, EAC, cULus, WEEE
Connection	2x M12x1-Female, 4-pin, D-coded 7/8“-Male, 5-pin
Productview	Page 380

	BIS0146 BIS V-6106-034-C104	BIS0147 BIS V-6110-063-C102	BIS014E BIS V-6111-073-C103
	Multi-Frequency Processor	Multi-Frequency Processor	Multi-Frequency Processor
	Ethernet/IP	EtherCAT	CC-Link
	LF 125 kHz (BIS VL), LF 70/455 kHz (BIS C), HF 13.56 MHz (BIS VM), UHF 860/960 MHz (BIS VU)	LF 125 kHz (BIS VL), LF 70/455 kHz (BIS C), HF 13.56 MHz (BIS VM), UHF 860/960 MHz (BIS VU)	LF 125 kHz (BIS VL), LF 70/455 kHz (BIS C), HF 13.56 MHz (BIS VM)
	4	4	4
	24 V DC LPS Class 2	24 V DC LPS Class 2	24 V DC LPS Class 2
	Zinc, Die casting	Zinc, Die casting	Zinc, Die casting
	0...60 °C	0...60 °C	0...60 °C
	IP65, with connector	IP65, with connector	IP65, with connector
	CE, EAC, cULus, WEEE	CE, EAC, cULus, WEEE	CE, EAC, cULus, WEEE
	2x M12x1-Female, 4-pin, D-coded 7/8“-Male, 4-pin	2x M12x1-Female, 4-pin, D-coded 7/8“-Male, 5-pin	M12x1-Male, 5-pin, A-coded M12x1-Female, 5-pin, A-coded 7/8“-Male, 5-pin
	Page 380	Page 381	Page 381

	BIS008U BIS C-600-007-650-00-KL1	
Product Group	LF (70/455 kHz)	
Interface	RS232	
Supported RFID technologies	LF 70/455 kHz (BIS C)	
Number of connectable R/W heads / antennas	2	
Operating voltage Ub	19.2...28.8 VDC	
Housing material	ABS	
Ambient temperature	0...60 °C	
IP rating	IP65 with read/write head	
Approval/Conformity	CE, cULus, EAC, WEEE	
Connection	Terminal strip, 19-pin	
Productview	Page 382	

	BIS00K3 BIS C-6008-048-650-06-ST23	BIS00K4 BIS C-6028-048-050-06-ST22	BIS00TU BIS C-6028-048-050-06-ST28
	LF (70/455 kHz)	LF (70/455 kHz)	LF (70/455 kHz)
	Profinet I/O (IRT), Profinet I/O (IRT) 2-port switch	Profinet	Profinet
	LF 70/455 kHz (BIS C)	LF 70/455 kHz (BIS C)	LF 70/455 kHz (BIS C)
	2	2	2
	19.2...28.8 VDC	19.2...28.8 VDC	19.2...28.8 VDC
	ABS	Aluminum, Die casting	Aluminum, Die casting
	0...60 °C	0...60 °C	0...60 °C
	IP65, with connector	IP65, with connector	IP65, with connector
	CE, cULus, EAC, WEEE	CE, cULus, EAC, WEEE	CE, cULus, EAC, WEEE
	Female, 4-pin, D-coded M12x1-Female, 4-pin, D-coded Male, 5-pin	2x RJ45-Female, 8-pin Male, 5-pin	Female, 4-pin, D-coded M12x1-Female, 4-pin, D-coded Male, 5-pin
	Page 382	Page 383	Page 383

	BIS009F BIS C-6002-019-654-03-ST11	
Product Group	LF (70/455 kHz)	
Interface	Profibus DP Slave galvanically isolated	
Supported RFID technologies	LF 70/455 kHz (BIS C)	
Number of connectable R/W heads / antennas	1	
Operating voltage Ub	19.2...28.8 VDC	
Housing material	ABS	
Ambient temperature	0...60 °C	
IP rating	IP65 with read/write head	
Approval/Conformity	CE, cULus, EAC, WEEE	
Connection	Male, 5-pin, B-coded M12x1-Female, 5-pin, B-coded Male, 5-pin	
Productview	Page 384	

	BIS009L BIS C-6002-028-650-03-KL2	BIS0099 BIS C-6002-019-650-03-KL2	BIS009A BIS C-6002-019-650-03-ST11
	LF (70/455 kHz)	LF (70/455 kHz)	LF (70/455 kHz)
	Profibus DP Slave galvanically isolated	Profibus DP Slave galvanically isolated	Profibus DP Slave galvanically isolated
	LF 70/455 kHz (BIS C)	LF 70/455 kHz (BIS C)	LF 70/455 kHz (BIS C)
	1	2	2
	19.2...28.8 VDC	19.2...28.8 VDC	19.2...28.8 VDC
	ABS	ABS	ABS
	0...60 °C	0...60 °C	0...60 °C
	IP65 with read/write head	IP65 with read/write head	IP65 with read/write head
	CE, cULus, EAC, WEEE	CE, cULus, EAC, WEEE	CE, cULus, EAC, WEEE
	Terminal strip, 19-pin	Terminal strip, 19-pin	Male, 5-pin, B-coded M12x1-Female, 5-pin, B-coded Male, 5-pin
	Page 384	Page 384	Page 385

	BIS009J BIS C-6002-019-655-03-ST11	
Product Group	LF (70/455 kHz)	
Interface	Profibus DP Slave galvanically isolated	
Supported RFID technologies	LF 70/455 kHz (BIS C)	
Number of connectable R/W heads / antennas	2	
Operating voltage Ub	19.2...28.8 VDC	
Housing material	ABS	
Ambient temperature	0...60 °C	
IP rating	IP65 with read/write head	
Approval/Conformity	CE, cULus, EAC, WEEE	
Connection	Male, 5-pin, B-coded M12x1-Female, 5-pin, B-coded Male, 5-pin	
Productview	Page 385	

	BIS009M BIS C-6002-028-650-03-ST11	BIS00A4 BIS C-602-019-650-03-KL2	BIS00AL BIS C-6022-019-050-03-ST10
	LF (70/455 kHz)	LF (70/455 kHz)	LF (70/455 kHz)
	Profibus DP Slave galvanically isolated	Profibus DP Slave galvanically isolated	Profibus DP Slave galvanically isolated
	LF 70/455 kHz (BIS C)	LF 70/455 kHz (BIS C)	LF 70/455 kHz (BIS C)
	2	2	2
	19.2...28.8 VDC	19.2...28.8 VDC	19.2...28.8 VDC
	ABS	ABS	Aluminum, Die casting
	0...60 °C	0...60 °C	0...60 °C
	IP65 with read/write head	IP65 with read/write head	IP65, with connector
	CE, cULus, EAC, WEEE	CE, cULus, EAC, WEEE	CE, cULus, EAC, WEEE
	Male, 5-pin, B-coded M12x1-Female, 5-pin, B-coded Male, 5-pin	Terminal strip, 19-pin	2x Female, 12-pin Male, 5-pin
	Page 385	Page 384	Page 386

	BIS00AM BIS C-6022-019-050-03-ST14	
Product Group	LF (70/455 kHz)	
Interface	Profibus DP Slave galvanically isolated	
Supported RFID technologies	LF 70/455 kHz (BIS C)	
Number of connectable R/W heads / antennas	2	
Operating voltage Ub	19.2...28.8 VDC	
Housing material	Aluminum, Die casting	
Ambient temperature	0...60 °C	
IP rating	IP65, with connector	
Approval/Conformity	CE, cULus, EAC, WEEE	
Connection	Male, 5-pin, B-coded M12x1-Female, 5-pin, B-coded Male, 5-pin	
Productview	Page 386	

	BIS00AY BIS C-6027-039-050-06-ST19	BIS00AU BIS C-6026-034-050-06-ST19	
	LF (70/455 kHz)	LF (70/455 kHz)	
	Ethernet TCP/IP	Ethernet/IP	
	LF 70/455 kHz (BIS C)	LF 70/455 kHz (BIS C)	
	2	2	
	19.2...28.8 VDC	19.2...28.8 VDC	
	Aluminum, Die casting	Aluminum, Die casting	
	0...60 °C	0...60 °C	
	IP65, with connector	IP65, with connector	
	CE, cULus, EAC, WEEE	CE, cULus, EAC, WEEE	
	Female, 4-pin, D-coded Male, 5-pin	Female, 4-pin, D-coded Male, 5-pin	
	Page 387	Page 387	

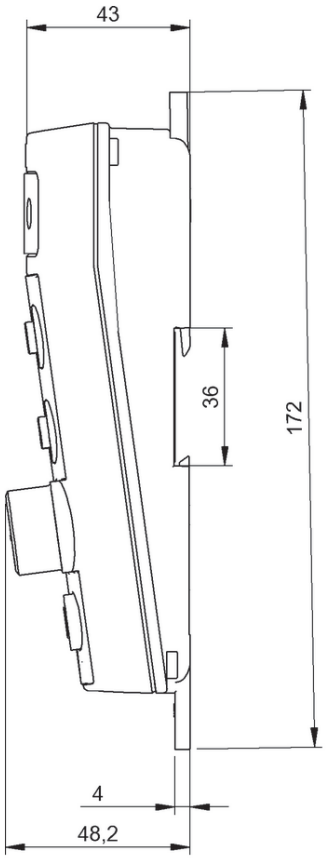

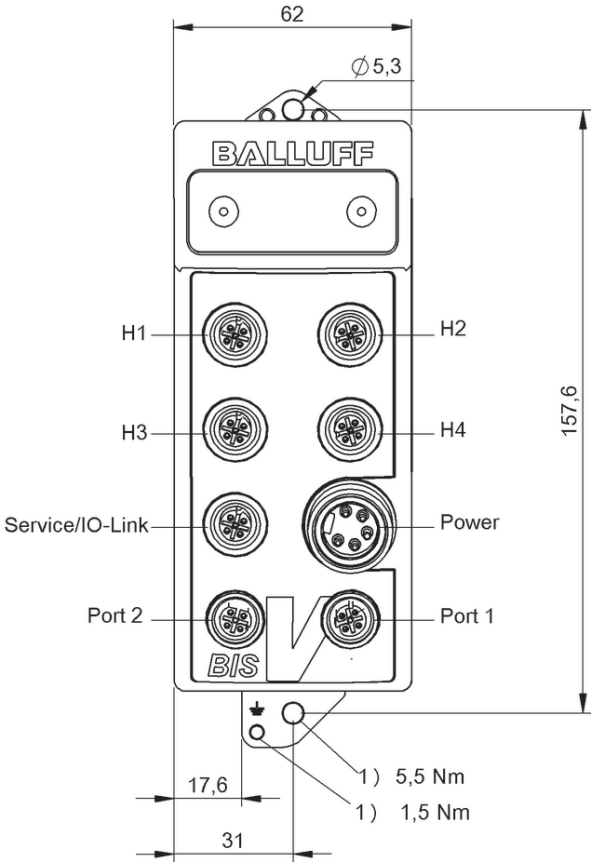

1) Tightening torque

BIS013W

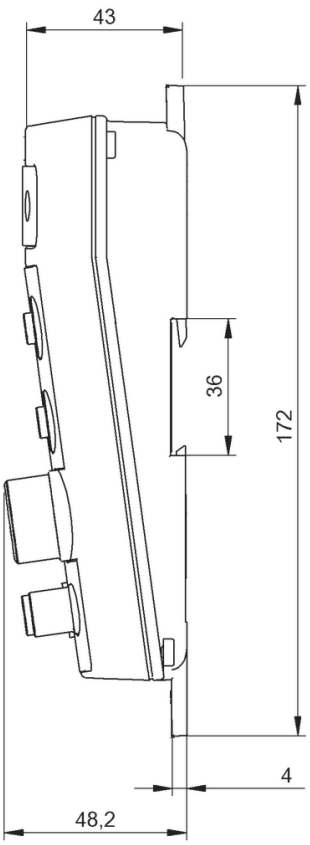

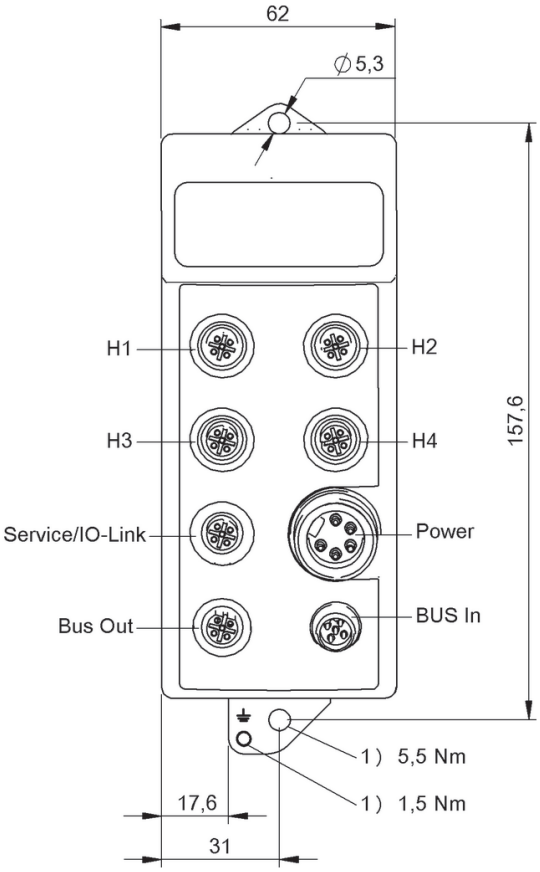

1) Tightening torque

BIS012E

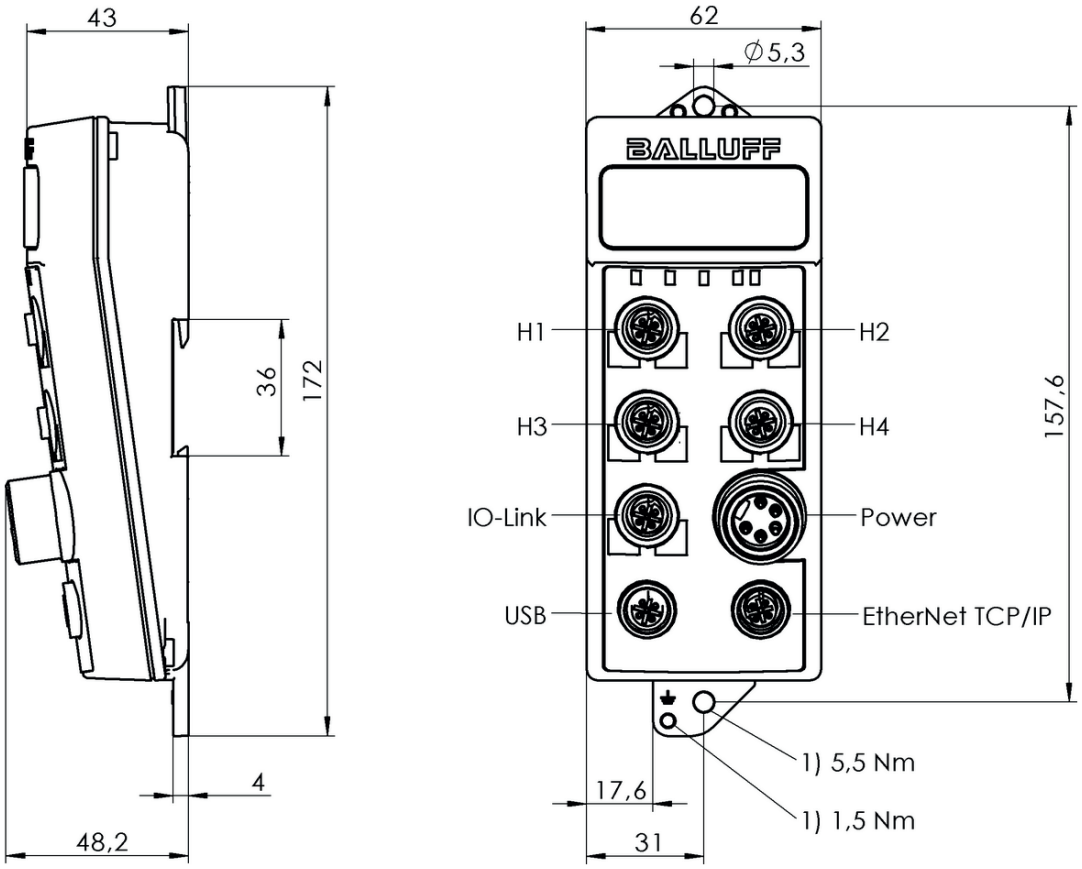

1) Tightening torque

BIS0187

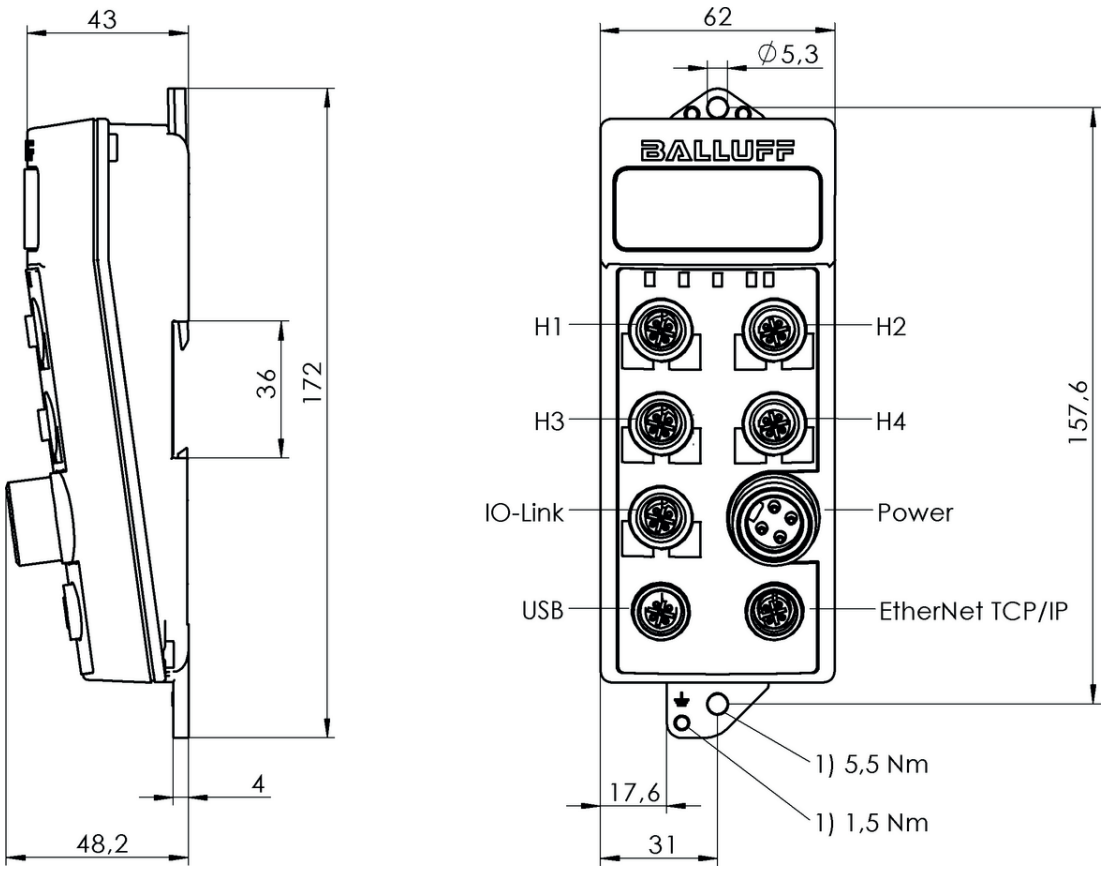

1) Tightening torque

BIS018K

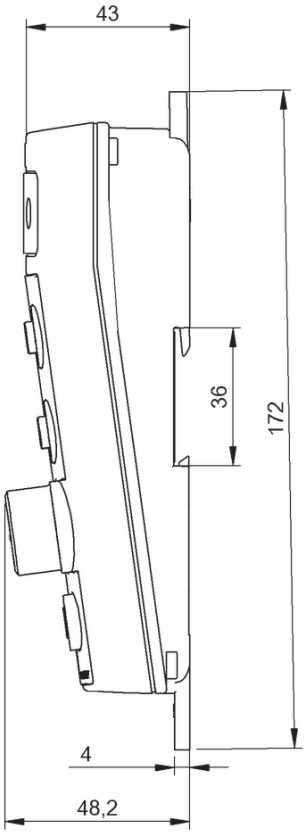

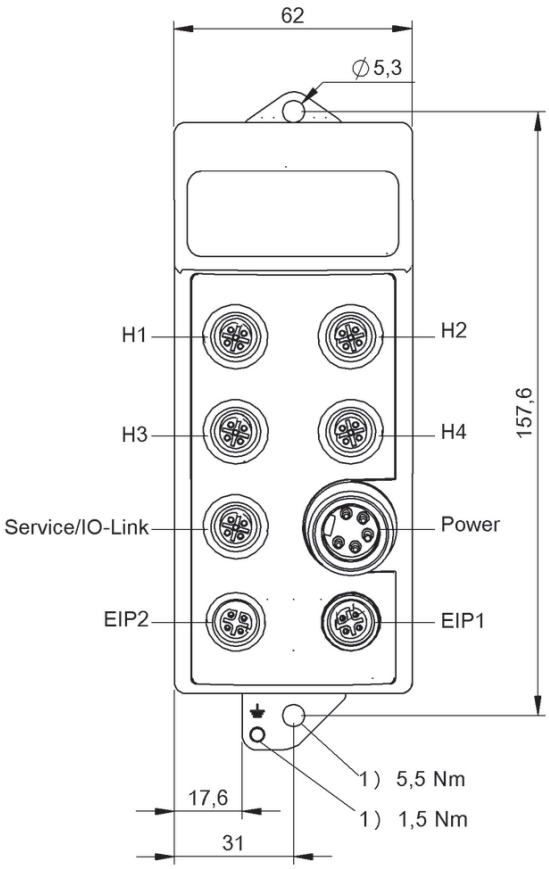

1) Tightening torque

BIS014C

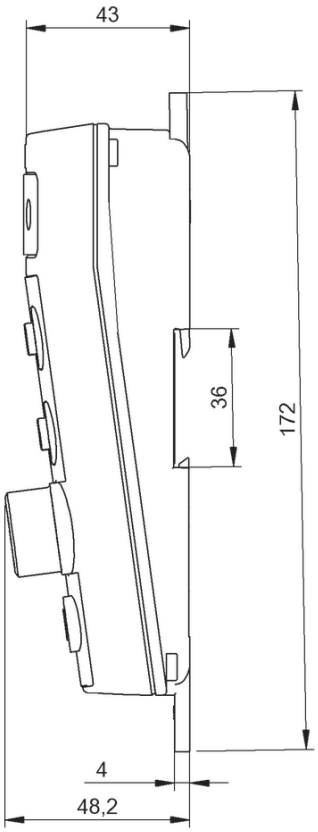

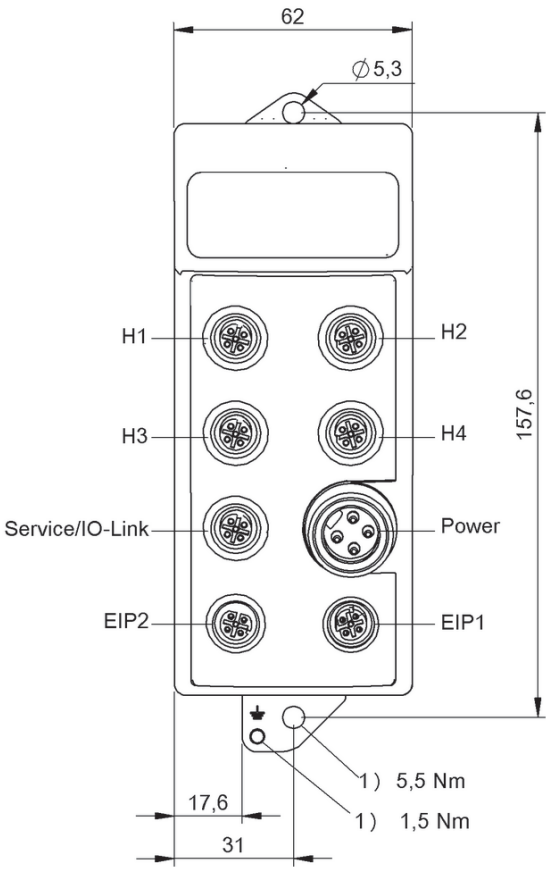

1) Tightening torque

BIS0146

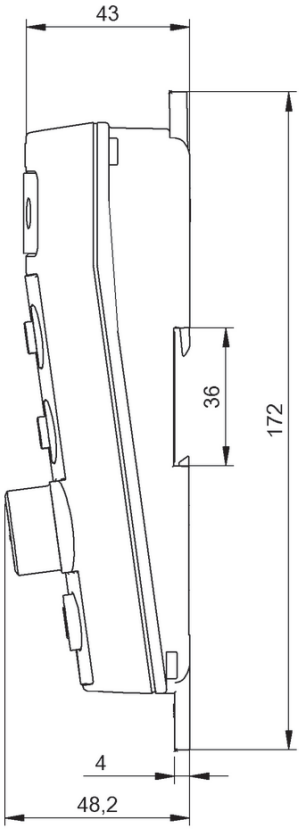

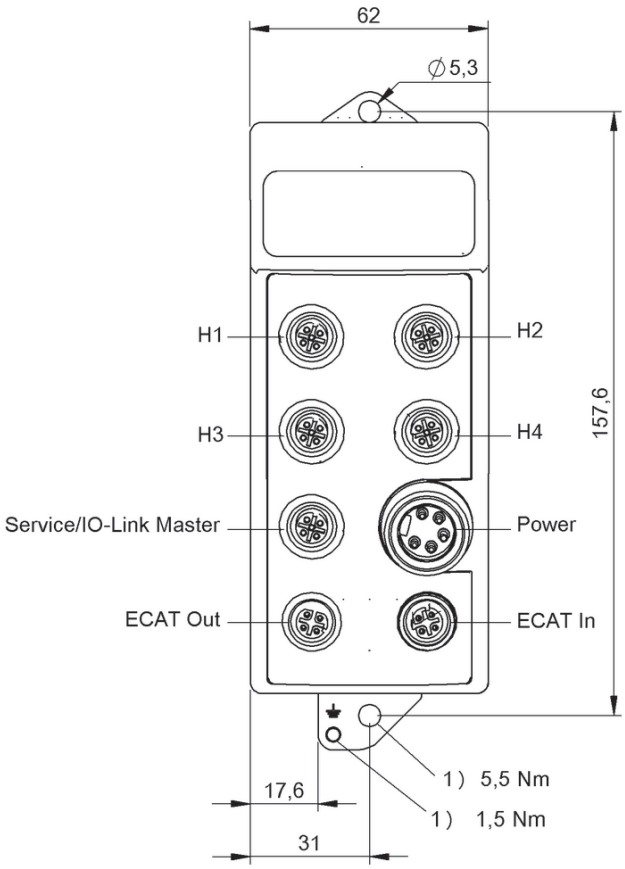

1) Tightening torque

BIS0147

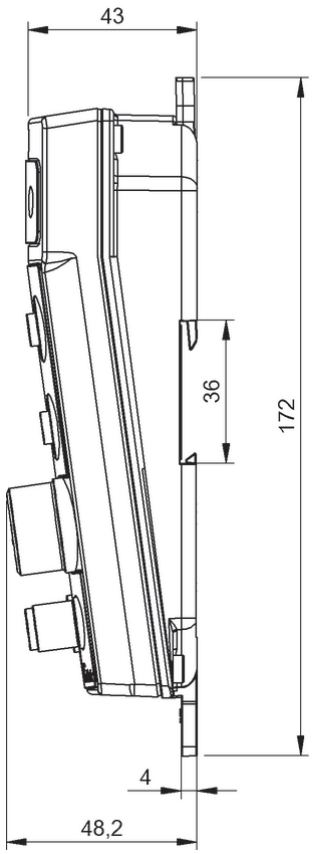

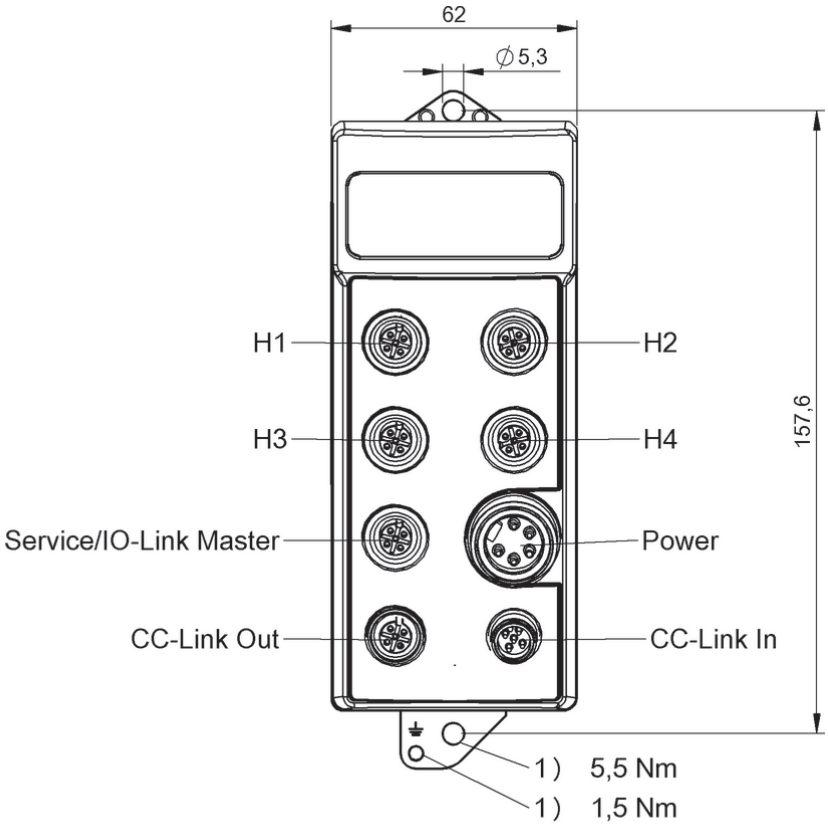

1) Tightening torque

BIS014E

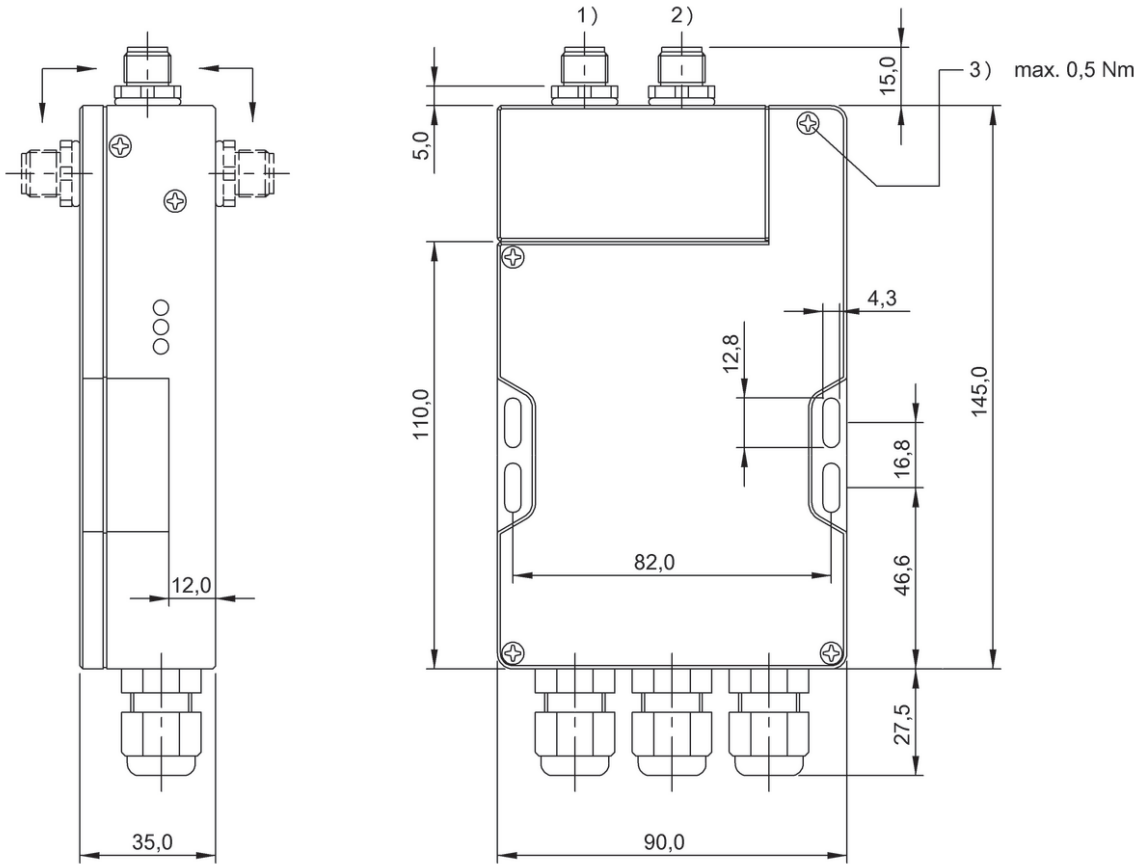

1) Head 1, 2) Head 2, 3) Tightening torque

BIS008U

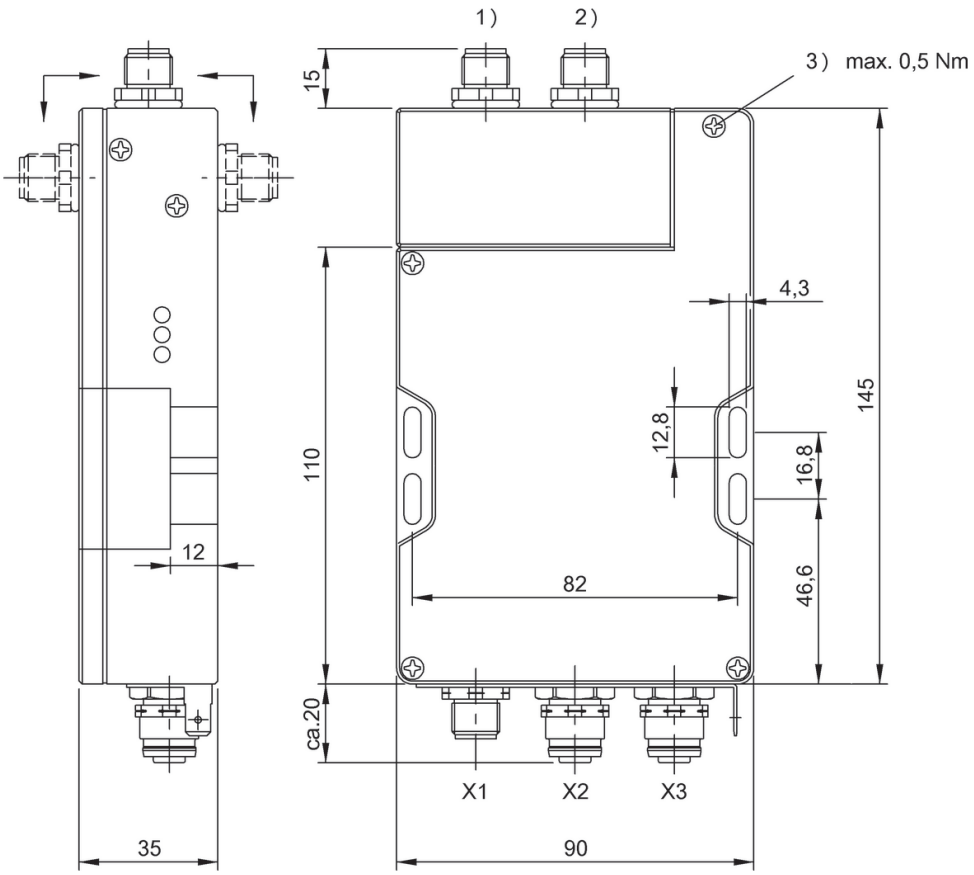

1) Head 1, 2) Head 2, 3) Tightening torque

BIS00K3

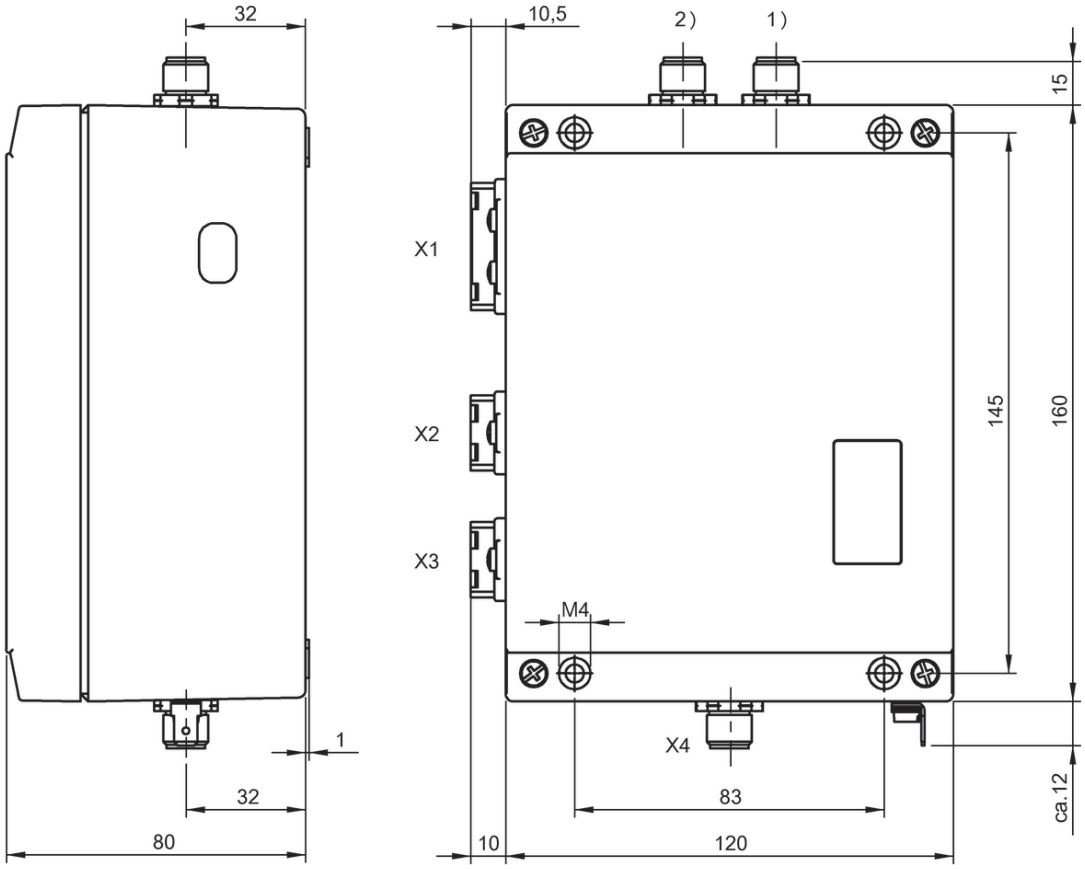

1) Head 1, 2) Head 2

BIS00K4

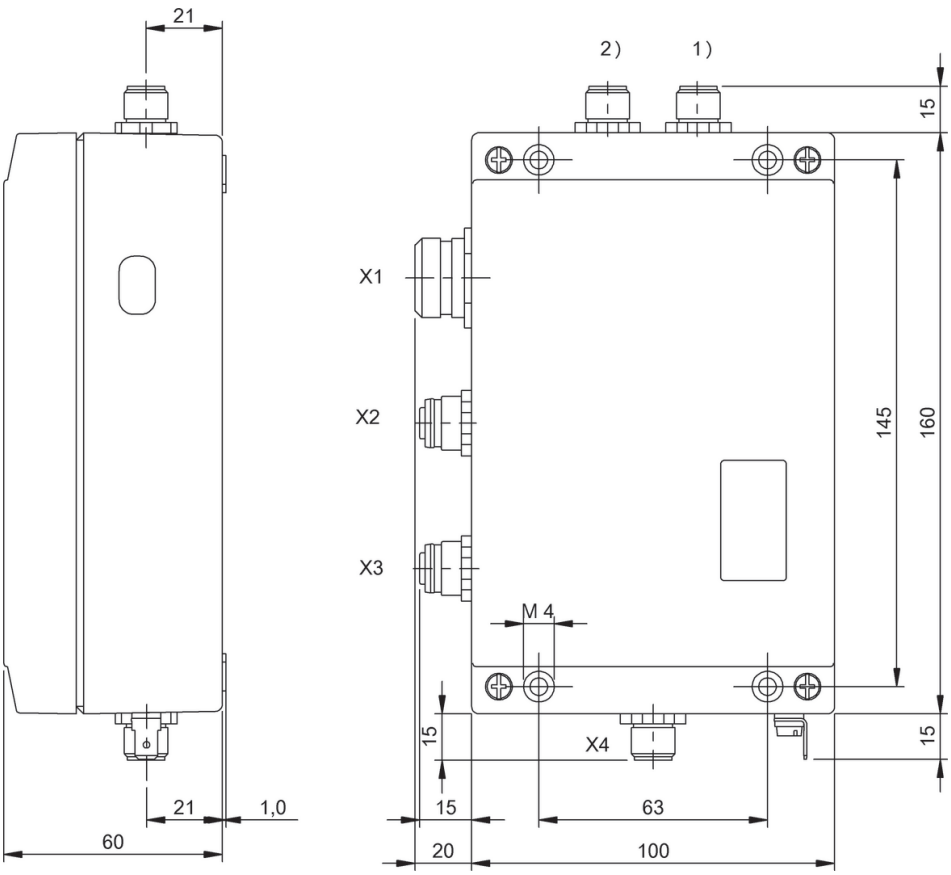

1) Head 1, 2) Head 2

BIS00TU

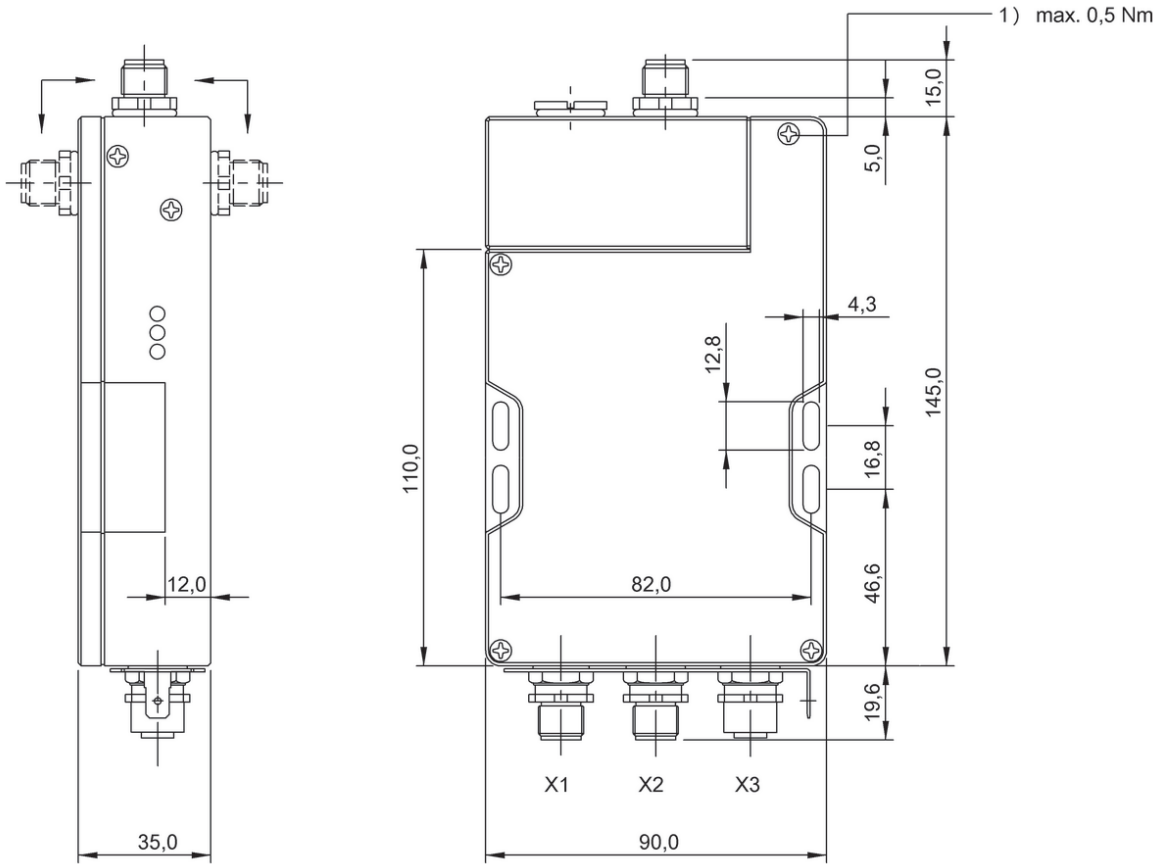

1) Tightening torque

BIS009F

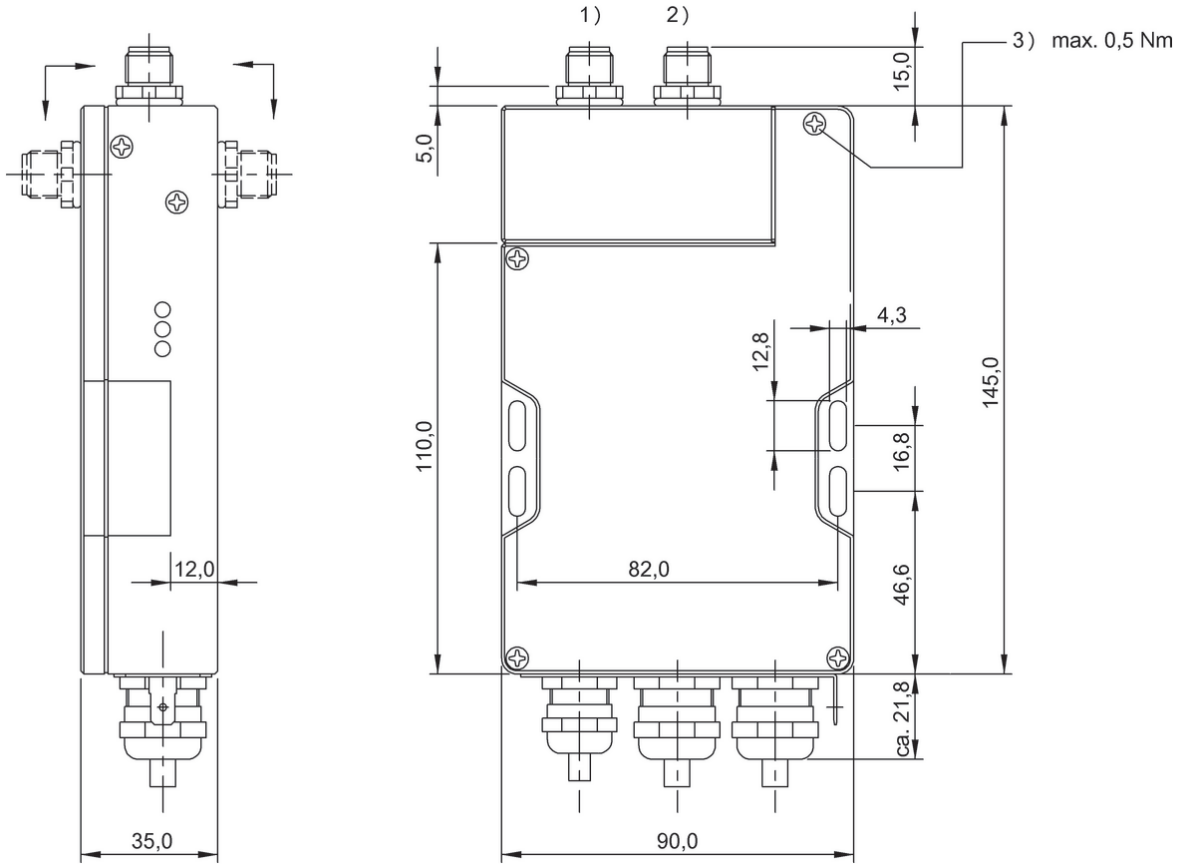

1) Head 1, 2) Head 2, 3) Tightening torque

BIS009L, BIS0099, BIS00A4

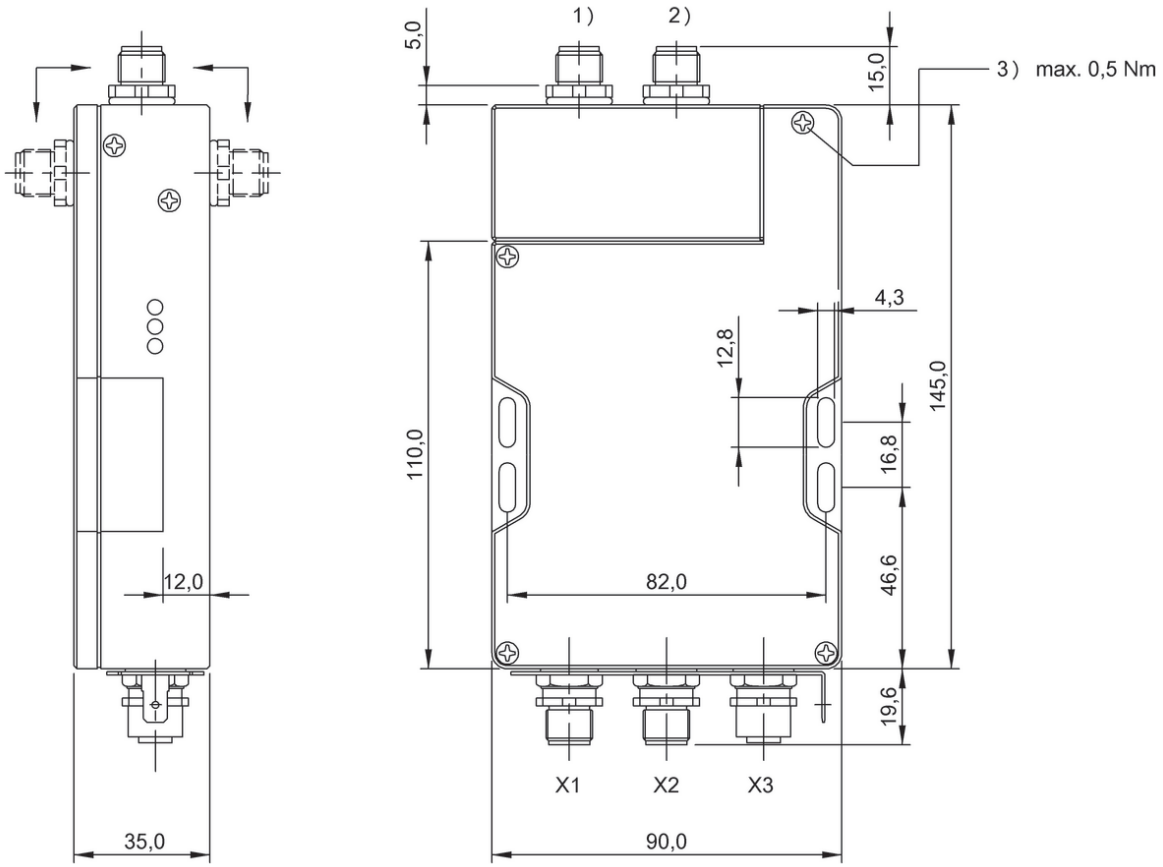

1) Head 1, 2) Head 2, 3) Tightening torque

BIS009A, BIS009M

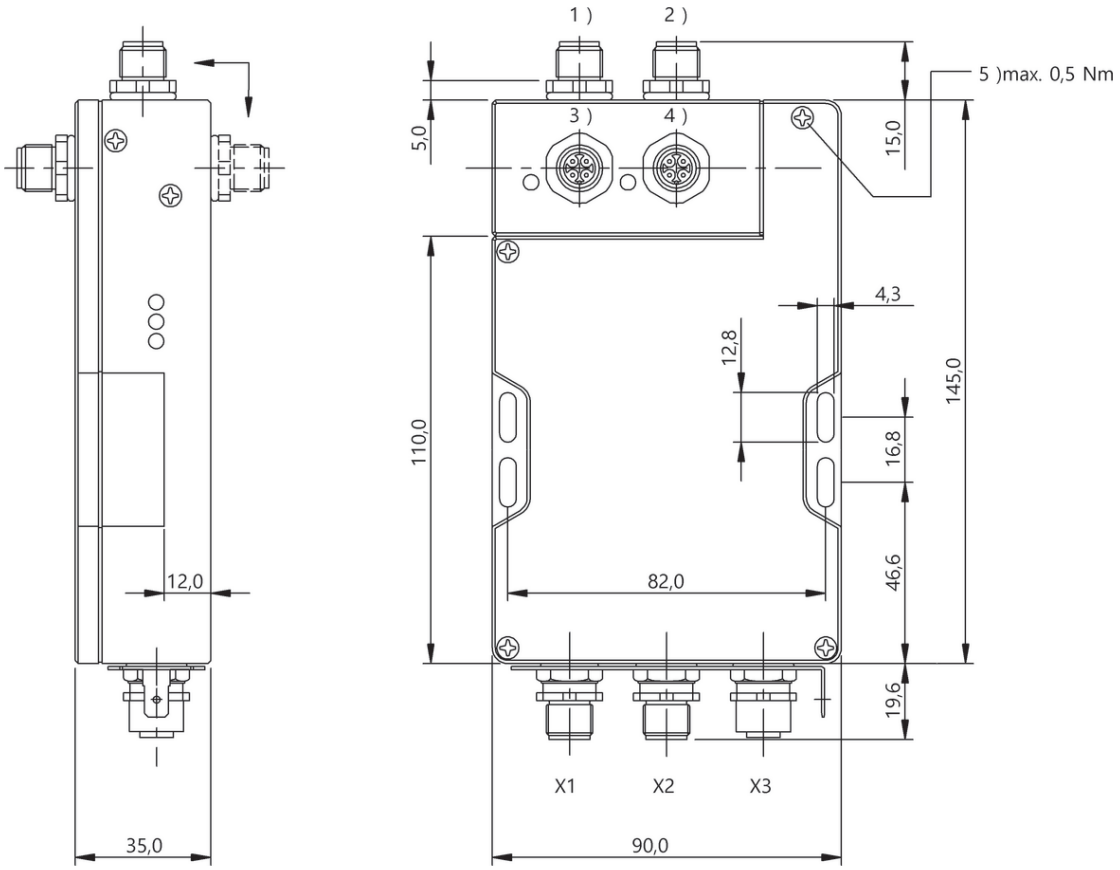

1) Head 1.1, 2) Head 2.1, 3) Head 1.2, 4) Head 2.2, 5) Tightening torque

BIS009J

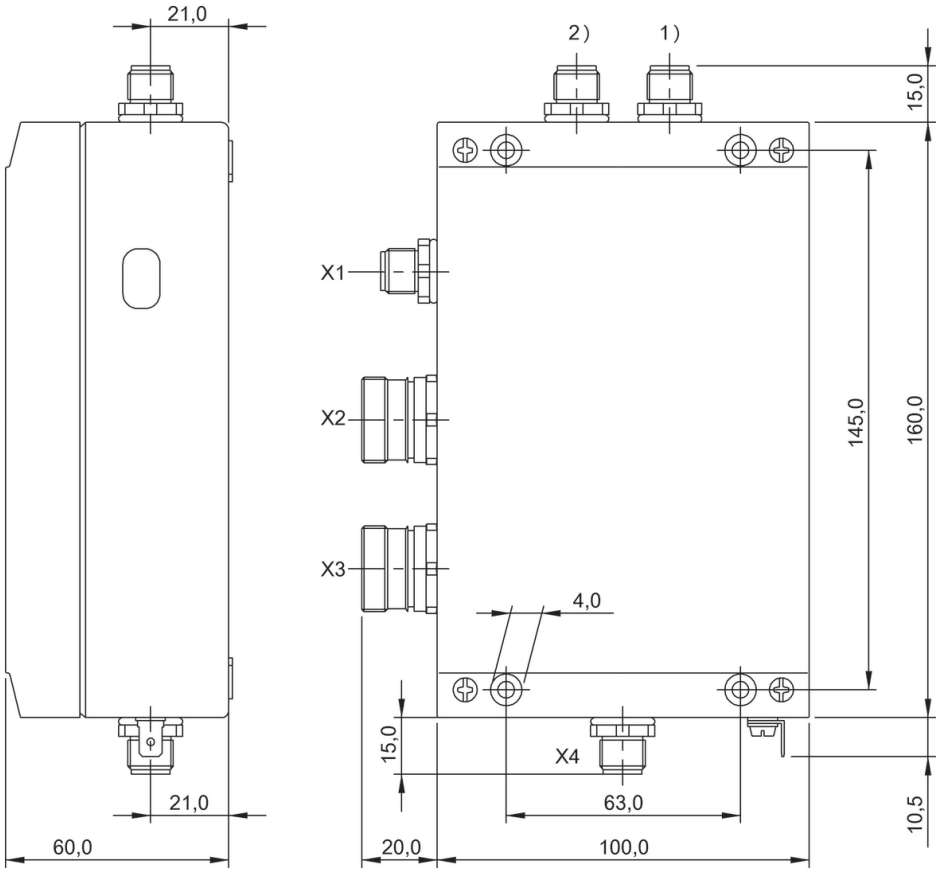

1) Head 1, 2) Head 2

BIS00AL

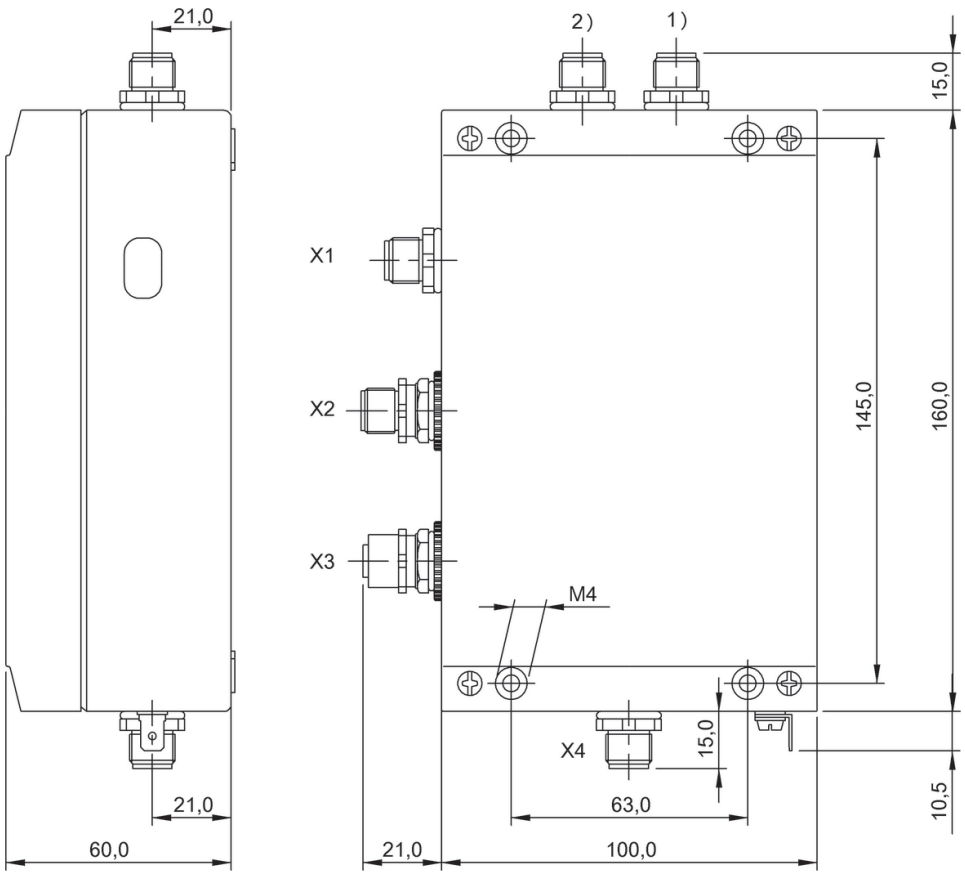

1) Head 1, 2) Head 2

BIS00AM

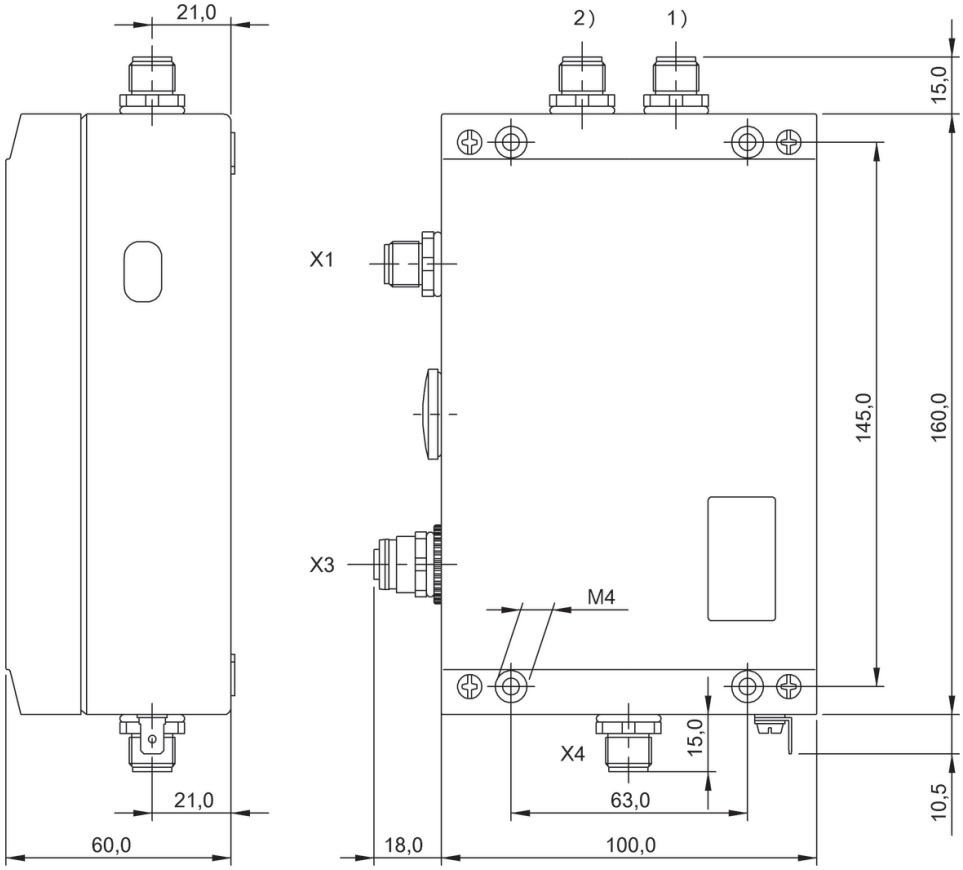

1) Head 1, 2) Head 2

BIS00AY, BIS00AU

5 m cable PU	**BIS00H6** BIS C-60R-001-08P-PU-05
10 m cable PU	**BIS00H7** BIS C-60R-001-08P-PU-10
20 m cable PU	**BIS00H8** BIS C-60R-001-08P-PU-20
Product Group	LF (70/455 kHz)
Dimension	Ø 30 x 95 mm
Installation	metal-free (clear zone)
Antenna type	round
Connection	Cable (shielded), 11-pin
Housing material	Brass
Interface	8 Bit parallel
Ambient temperature	0...50 °C
Protection degree	IP67
Approval/Conformity	CE

Appropriate data carrier

	BIS000T		BIS0011		BIS0004		BIS001E		BIS0002		BIS0019		BIS000M		BIS000N	
Data carrier distance to metal	flush	metal-free	metal-free		flush	metal-free	flush	metal-free	flush	metal-free	metal-free		flush		metal-free	
Working distance for reading	0-3	0-5	1-5		0-4	1-5	0-5	1-8	0-5	1-6	3-12		1-8		1-8	
Offset at distance																
1	±2	±3	±3		±4	±2.5	±3	±4	±2.5	±3			±5		±7	
3	±2	±3	±3		±2.5	±2.5	±3	±5	±3	±3	±7		±5		±7	
5		±3	±3			±2.5	±3	±5	±3	±3	±6		±5		±7	
7								±5			±5		±5		±6	

Dimensions in mm

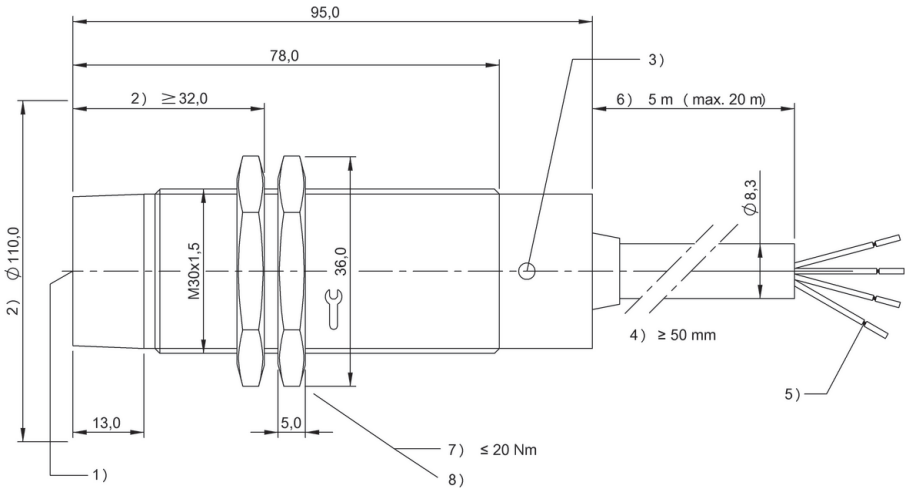

1) Sensing surface, 2) Clear zone, 3) data valid, 4) Cable bending radius, 5) strip, 6) standard length, 7) Tightening torque, 8) see remarks

	BIS000C		BIS0006	
	flush	metal-free	flush	
	0-6	1-8	1-8	
	±7	±7	±4	
	±7	±7	±4	
	±6	±7	±4	
		±6	±4	

Do you need more details? Our Product Finder at www.balluff.com provides you with product-specific information, including technical drawings, data sheets, user guides and more for each individual product. All items are available for download.

	BAE004C BIS C-720-01-03	BAE0088 BIS C-810-0-003	
Product Group	LF (70/455 kHz)	LF (70/455 kHz)	
Product name	Read / write gun	Standard	
Dimension	90 x 85 x 200 mm	97 x 55 x 232 mm	
Antenna type	—	—	
Use	for all C-85x with jack plug Ø6.3 mm	for all C-85x with jack plug Ø6.3 mm	
Display	—	LCD display 20 characters/4 lines	
Keypad	—	32 keys, alphanumeric (4x8)	
Operating voltage Ub	—	2.4 V DC rechargeable battery pack NiMH	
Storage temperature	-20...70 °C	—	
Ambient temperature	0...50 °C	0...50 °C	
Protection degree	IP40	IP40	
Approval/Conformity	CE	CE	
Productview	Page 394	Page 394	

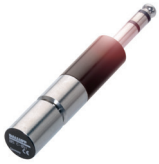

	BAE0094 BIS C-850	BAE0095 BIS C-851	BAE0096 BIS C-852	BAE0097 BIS C-853
	LF (70/455 kHz)	LF (70/455 kHz)	LF (70/455 kHz)	LF (70/455 kHz)
	Read / write heads	Read / write heads	Read / write heads	Read / write heads
	—	Ø 14.5 x 94 mm	Ø 30 x 97 mm	27 x 27 x 72 mm
	—	round	round	Rod
	—	—	—	—
	—	—	—	—
	—	—	—	—
	—	—	—	—
	—	-20...85 °C	-20...85 °C	-20...60 °C
	—	0...70 °C	0...70 °C	0...60 °C
	IP67	IP67	IP67	IP67
	CE	CE	CE	CE
	Seite 395	Page 395	Page 395	Page 395

BALLUFF
BALLUFF
BALLUFF

PORTABLE LF READ/WRITE UNITS (70/455KHZ)

Do you need more details?
Our Product Finder at **www.balluff.com**
provides you with product-specific information,

including technical drawings, data sheets, user guides and more for each individual product.
All items are available for download.

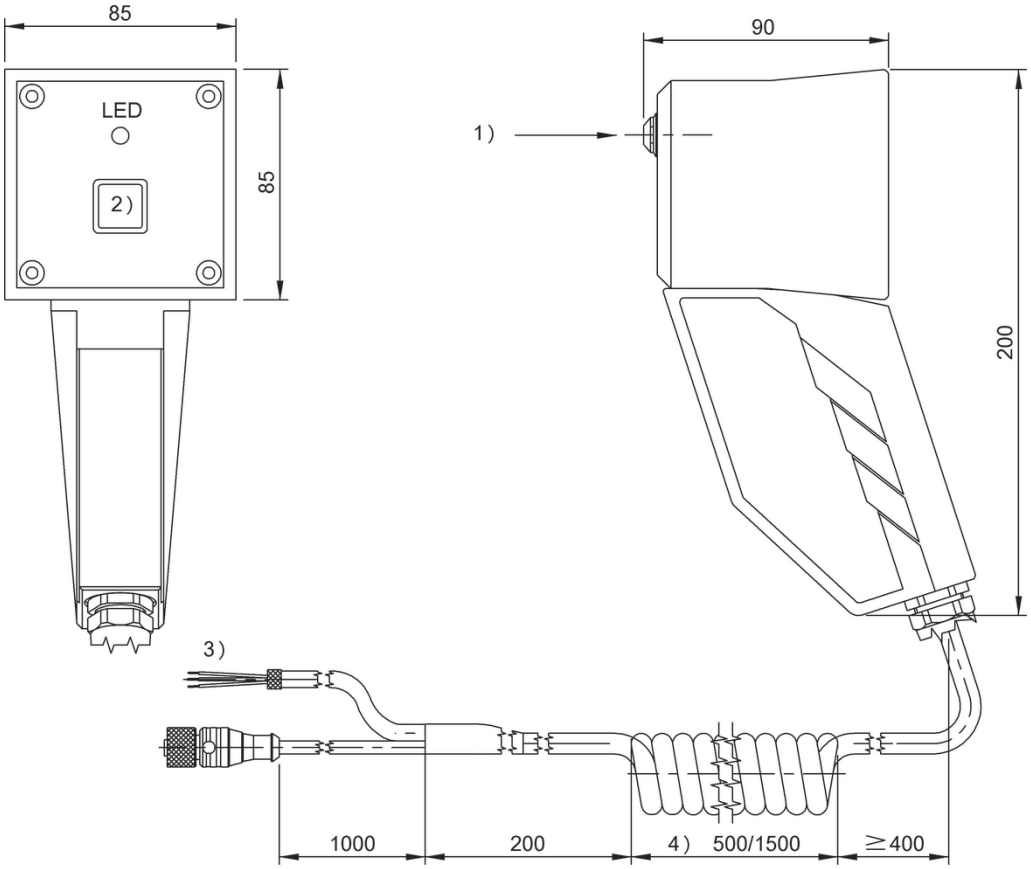

1) see remarks, 2) Button, 3) see connection diagram, 4) Spiral length retracted/extended

BAE004C

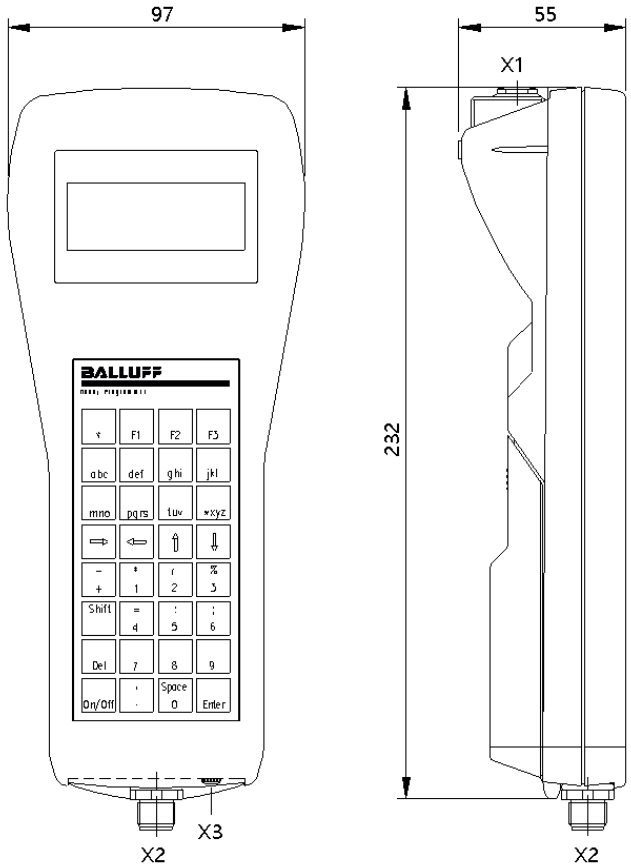

BAE0088

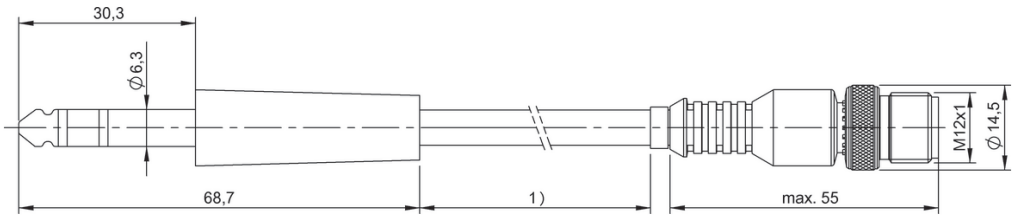

1) Cable length see text

BAE0094

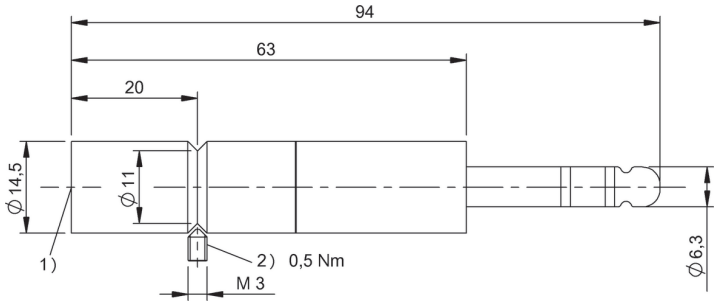

1) Sensing surface, 2) Tightening torque

BAE0095

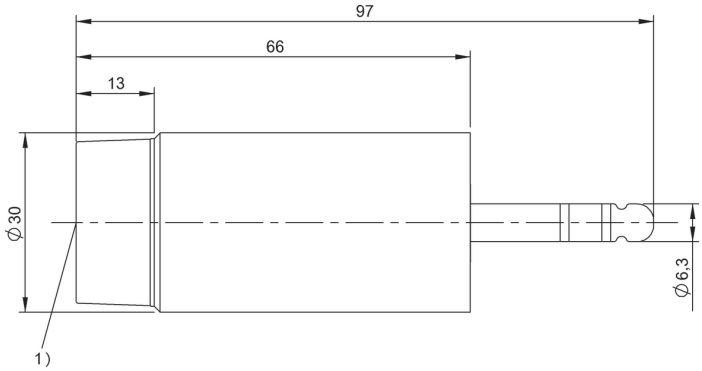

1) Sensing surface

BAE0096

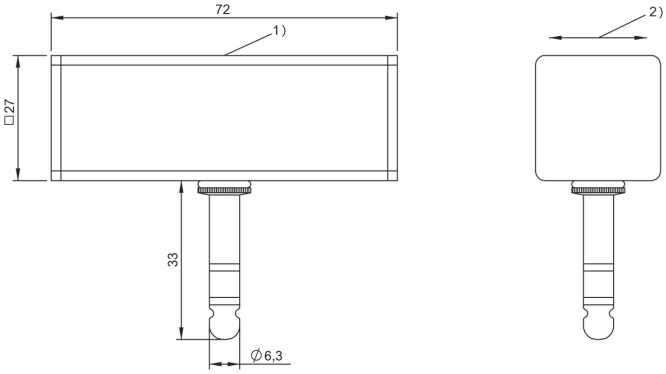

1) Sensing surface, 2) Read/write axis

BAE0097

Cost-effective solution for simple identification tasks

RFID-SYSTEM LF (125 KHZ) BIS L

Our low-frequency RFID systems BIS L are suitable for applications that involve only the identification and require less data processing. For example, often only a (read-only) code is required for tracing. The 125-kHz systems function reliably up to ranges of 100 mm and are relatively neutral with respect to materials such as water, textiles, wood and aluminum.

Features

- Data carrier memory limited to 192 bytes
- For sending smaller quantities of data
- Wide range of data carriers
- Unique ID with 5 bytes, read-only
- Read-only data carriers available (protection against manipulation)

	BIS0038 BIS L-101-05/L-R0	
Product Group	LF (125 kHz)	
Dimension	Ø 30 x 1.6 mm	
UID serial number, read-only	5 Byte	
User data, read/write	—	
Memory type	EEPROM	
Antenna type	round	
Installation	metal-free (clear zone) on metal flush in metal	
Storage temperature	-40...95 °C	
Storage temperature temporary	—	
Ambient temperature	-25...85 °C	
Housing material	Epoxy resin-glass fiber, GF	
Protection degree	IP67	
Approval/Conformity	CE	
Productview	Page 407	

Suitable read/write head with max. read/write working distance

Installation	flush in metal	on metal	metal-free (clear zone)	
BIS L-40x-xxx-001	0-18	0-24	0-40	
BIS L-40x-xxx-002			0-27	
BIS L-40x-xxx-003				
BIS L-40x-xxx-004			0-27	
BIS VL-300	10-30	10-35	0-50	
BIS VL-301	20-40	20-45	0-70	
BIS VL-302	10-20	10-20	0-30	
BIS VL-304	10-20	10-20	0-30	
BIS VL-306				

Dimensions in mm
* Installation on request

	BIS003C BIS L-102-05/L-R0	BIS003F BIS L-103-05/L-R0	
	LF (125 kHz)	LF (125 kHz)	
	Ø 50 x 1.6 mm	Ø 12.4 x 2 mm	
	5 Byte	5 Byte	
	—	—	
	EEPROM	EEPROM	
	round	round	
	metal-free (clear zone) on metal flush in metal	metal-free (clear zone) on metal flush in metal	
	-40...95 °C	—	
	—	-40...130 °C 1x1000 h	
	-25...85 °C	-25...85 °C	
	Epoxy resin-glass fiber, GF	PPS, EP	
	IP67	IP68	
	CE	CE	
	Page 407	Page 407	

	flush in metal	on metal	metal-free (clear zone)	flush in metal	on metal	metal-free (clear zone)			
	0-28	0-32	0-55			0-20			
						0-16			
						0-11			
						0-16			
	15-40	15-45	0-70	3-10	3-12	0-25			
	25-55	25-60	0-100						
	10-20	10-25	0-40	3-8	4-10	0-15			
	10-20	10-25	0-40	3-8	4-10	0-15			
						0-7			

	BIS003R BIS L-200-03/L	
Product Group	LF (125 kHz)	
Dimension	Ø 20 x 1.6 mm	
UID serial number, read-only	5 Byte	
User data, read/write	—	
Memory type	PROM	
Antenna type	round	
Installation	metal-free (clear zone) on metal flush in metal	
Storage temperature	-40...95 °C	
Storage temperature temporary	—	
Ambient temperature	-40...85 °C	
Housing material	Epoxy resin-glass fiber, GF	
Protection degree	IP67	
Approval/Conformity	CE	
Supported data carrier types	EM4_02	
Productview	Page 407	

Suitable read/write head with max. read/write working distance

Installation	flush in metal	on metal	metal-free (clear zone)	
BIS L-40x-xxx-001	5-12	0-15	0-30	
BIS L-40x-xxx-002			0-23	
BIS L-40x-xxx-003				
BIS L-40x-xxx-004			0-23	
BIS VL-300	10-20	10-25	0-40	
BIS VL-301	20-50	20-50	0-70	
BIS VL-302	8-15	8-15	0-25	
BIS VL-304	8-15	8-15	0-25	
BIS VL-306				

Dimensions in mm
* Installation on request

	BIS003T BIS L-201-03/L	BIS003U BIS L-202-03/L	BIS003W BIS L-203-03/L
	LF (125 kHz)	LF (125 kHz)	LF (125 kHz)
	Ø 30 x 1.6 mm	Ø 50 x 1.6 mm	Ø 12.4 x 2 mm
	5 Byte	5 Byte	5 Byte
	—	—	—
	PROM	PROM	PROM
	round	round	round
	metal-free (clear zone) on metal flush in metal	metal-free (clear zone) on metal flush in metal	metal-free (clear zone) on metal flush in metal
	-40...95 °C	-40...95 °C	—
	—	—	-40...130 °C 1x1000 h
	-40...85 °C	-40...85 °C	-25...85 °C
	Epoxy resin-glass fiber, GF	Epoxy resin-glass fiber, GF	PPS, EP
	IP67	IP67	IP68
	CE	CE	CE
	EM4_02	EM4_02	EM4_02
	Page 407	Page 407	Page 407

	flush in metal	on metal	metal-free (clear zone)	flush in metal	on metal	metal-free (clear zone)	flush in metal	on metal	metal-free (clear zone)
	0-18	0-24	0-40	0-28	0-32	0-55			0-20
			0-23						0-16
									0-11
			0-27						0-16
	10-30	10-35	0-50	15-40	15-45	0-70	3-10	3-12	0-25
	20-40	20-45	0-70	25-55	25-60	0-100			
	10-20	10-20	0-30	10-20	10-25	0-40	3-8	4-10	0-15
	10-20	10-20	0-30	10-20	10-25	0-40	3-8	4-10	0-15
									0-7

	BIS0033 BIS L-100-01/L	
Product Group	LF (125 kHz)	
Dimension	Ø 20 x 1.6 mm	
UID serial number, read-only	4 Byte	
User data, read/write	192 Byte	
Memory type	EEPROM	
Antenna type	round	
Installation	metal-free (clear zone) on metal flush in metal	
Storage temperature	-40...95 °C	
Storage temperature temporary	—	
Ambient temperature	-25...85 °C	
Housing material	Epoxy resin-glass fiber, GF	
Protection degree	IP67	
Approval/Conformity	CE	
Supported data carrier types	Hitag1	
Productview	Page 407	

Suitable read/write head with max. read/write working distance

Installation	flush in metal	on metal	metal-free (clear zone)	
BIS VL-300	10-20	10-20	0-30	
BIS VL-301	15-25	15-30	0-40	
BIS VL-302	8-15	8-15	0-20	
BIS VL-304	8-15	8-15	0-20	
BIS VL-306				

Dimensions in mm
* Installation on request

	BIS0034 BIS L-100-05/L	BIS0036 BIS L-101-01/L	BIS0037 BIS L-101-05/L
	LF (125 kHz)	LF (125 kHz)	LF (125 kHz)
	Ø 20 x 1.6 mm	Ø 30 x 1.6 mm	Ø 30 x 1.6 mm
	4 Byte	4 Byte	4 Byte
	192 Byte	192 Byte	192 Byte
	EEPROM	EEPROM	EEPROM
	round	round	round
	metal-free (clear zone) on metal flush in metal	metal-free (clear zone) on metal flush in metal	metal-free (clear zone) on metal flush in metal
	-40...95 °C	-40...95 °C	-40...95 °C
	—	—	—
	-25...85 °C	-25...85 °C	-25...85 °C
	Epoxy resin-glass fiber, GF	Epoxy resin-glass fiber, GF	Epoxy resin-glass fiber, GF
	IP67	IP67	IP67
	CE	CE	CE
	HitagS	Hitag1	HitagS
	Page 407	Page 407	Page 407

	flush in metal	on metal	metal-free (clear zone)	flush in metal	on metal	metal-free (clear zone)	flush in metal*	on metal*	metal-free (clear zone)*
				10-30	10-30	0-40			
				15-35	15-40	0-55			
				10-20	10-20	0-25			
				10-20	10-20	0-25			
			0-12						

	BIS0039 BIS L-102-01/L	
Product Group	LF (125 kHz)	
Dimension	Ø 50 x 1.6 mm	
UID serial number, read-only	4 Byte	
User data, read/write	192 Byte	
Memory type	EEPROM	
Antenna type	round	
Installation	metal-free (clear zone) on metal flush in metal	
Storage temperature	-40...95 °C	
Storage temperature temporary	—	
Ambient temperature	-25...85 °C	
Housing material	Epoxy resin-glass fiber, GF	
Protection degree	IP67	
Approval/Conformity	CE	
Supported data carrier types	Hitag1	
Productview	Page 407	

Suitable read/write head with max. read/write working distance

Installation	flush in metal	on metal	metal-free (clear zone)	
BIS VL-300	15-40	15-40	0-55	
BIS VL-301	20-50	20-50	0-70	
BIS VL-302	10-20	10-25	0-30	
BIS VL-304	10-20	10-25	0-30	
BIS VL-306				

Dimensions in mm
* Installation on request

	BIS003A BIS L-102-05/L	BIS003E BIS L-103-05/L	BIS00KR BIS L-140-05/L-M8
	LF (125 kHz)	LF (125 kHz)	LF (125 kHz)
	Ø 50 x 1.6 mm	Ø 12.4 x 2 mm	Ø 22 x 21 mm
	4 Byte	4 Byte	4 Byte
	192 Byte	192 Byte	192 Byte
	EEPROM	EEPROM	PROM
	round	round	round
	metal-free (clear zone) on metal flush in metal	metal-free (clear zone) on metal flush in metal	metal-free (clear zone) on metal flush in metal
	-40...95 °C	—	-25...95 °C
	—	-40...130 °C 1x1000 h	—
	-25...85 °C	-25...85 °C	-25...85 °C
	Epoxy resin-glass fiber, GF	PPS, EP	Steel, PA 12, GF30
	IP67	IP68	—
	CE	CE	CE
	HitagS	HitagS	HitagS
	Page 407	Page 407	Page 407

	flush in metal	on metal	metal-free (clear zone)	flush in metal	on metal	metal-free (clear zone)	flush in metal*	on metal*	metal-free (clear zone)*
	15-40	15-45	0-70						
	25-55	25-60	0-100						
	10-20	10-25	0-40						
	10-20	10-25	0-40						
						0-7			

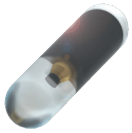

	BIS003N BIS L-150-05/A
Product Group	LF (125 kHz)
Dimension	Ø 3.15 x 13.3 mm
UID serial number, read-only	4 Byte
User data, read/write	192 Byte
Memory type	EEPROM
Antenna type	Rod
Installation	metal-free (clear zone) on metal flush in metal
Storage temperature	—
Storage temperature temporary	-40...90 °C 1x1000 h
Ambient temperature	-40...85 °C
Housing material	Glass, transparent
Protection degree	IP68
Approval/Conformity	CE
Supported data carrier types	HitagS
Productview	Page 407

Suitable read/write head with max. read/write working distance

Installation	flush in metal	on metal	metal-free (clear zone)
BIS VL-301			0-32
BIS VL-350	0-24	0-24	0-17

Dimensions in mm

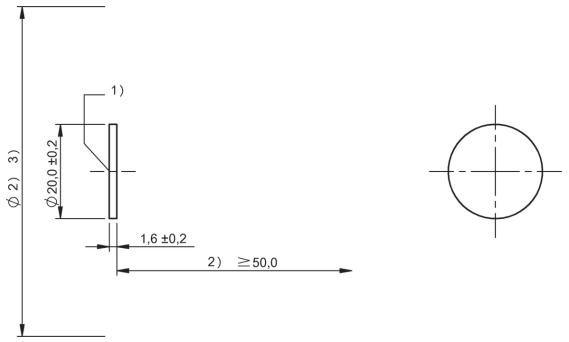

1) Sensing surface, 2) Clear zone, 3) see corresponding R/W head

BIS003R, BIS0033, BIS0034

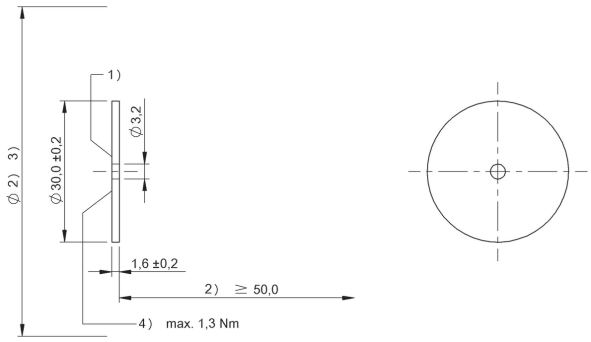

1) Sensing surface, 2) Clear zone, 3) see corresponding R/W head, 4) Tightening torque

BIS0038, BIS003T, BIS0036, BIS0037

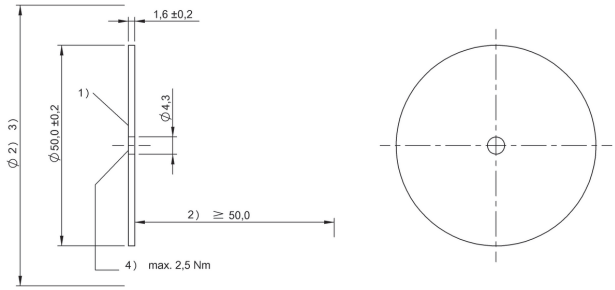

1) Sensing surface, 2) Clear zone, 3) see corresponding R/W head, 4) Tightening torque

BIS003C, BIS003U, BIS0039, BIS003A

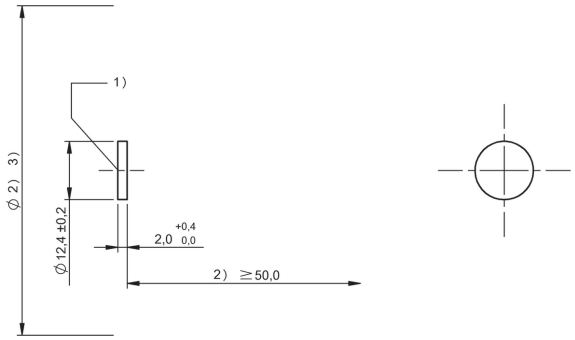

1) Sensing surface, 2) Clear zone, 3) see corresponding R/W head

BIS003F, BIS003W, BIS003E

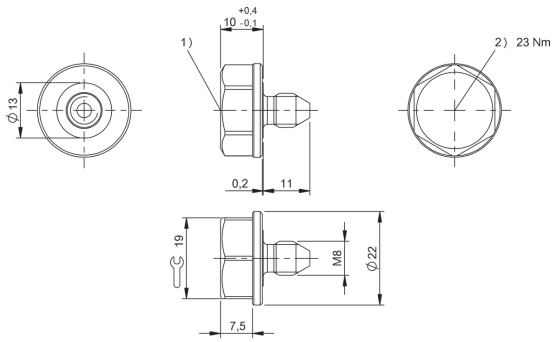

1) Sensing surface, 2) Tightening torque

BIS00KR

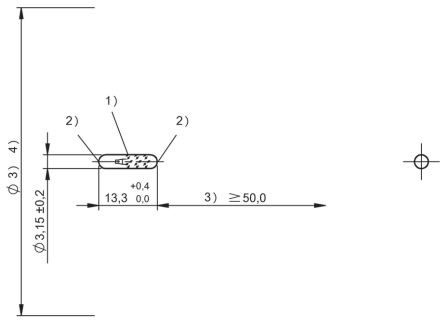

1) Sensing surface parallel, 2) Sensing surface axial, 3) Clear zone, 4) see corresponding R/W head

BIS003N

	BIS00UL BIS VL-300-001-S4
Product Group	LF (125 kHz)
Dimension	Ø 30 x 82 mm
Installation	metal-free (clear zone)
Antenna type	round
Connection	M12x1 connector, 4-pin
Housing material	PVDF, nuts PA 6.6
Interface	—
Operating voltage Ub	—
Storage temperature	-20...85 °C
Ambient temperature	0...70 °C
Protection degree	IP67
Approval/Conformity	CE

Appropriate data carrier

	BIS0033			BIS0036			BIS0039			BIS003R			BIS003T BIS0038		
Data carrier distance to metal	metal-free	on metal	flush in metal	metal-free	on metal	flush in metal	metal-free	on metal	flush in metal	metal-free	on metal	flush in metal	metal-free	on metal	flush in metal
Data carrier clear zone															
Working distance for writing	0-30	10-20	10-20	0-40	10-30	10-30	0-55	15-40	15-40						
Working distance for reading	0-30	10-20	10-20	0-40	10-30	10-30	0-55	15-40	15-40	0-40	10-25	10-20	0-50	10-35	10-30
Offset at distance															
0	±18			±28			±30			±20			±28		
3	±18			±28			±30			±20			±28		
7	±18			±28			±30			±20			±28		
8	±18			±28			±30			±20			±28		
10	±18	±8	±8	±28	±15	±13	±30			±20	±15	±10	±28	±20	±17
12	±18	±8	±8	±28	±15	±13	±30			±20	±15	±10	±28	±20	±17
15	±18	±5	±5	±28	±15	±10	±30	±20	±20	±20	±10	±10	±28	±20	±17
18	±18	±2	±2	±28	±15	±10	±30	±20	±18	±20	±10	±10	±28	±20	±17
20	±18	±0	±0	±28	±15	±10	±30	±20	±15	±20	±10	±0	±28	±20	±17
25	±18			±28	±10	±5	±30	±15	±15	±20	±0		±28	±20	±15
30	±18			±28	±0	±0	±30	±15	±10	±20			±28	±15	±0
35				±28			±30	±15	±0	±20			±28	±0	
40				±28			±30	±0		±20			±28		
45							±30						±28		
50							±30						±28		
55							±0								
60															
70															

Dimensions in mm

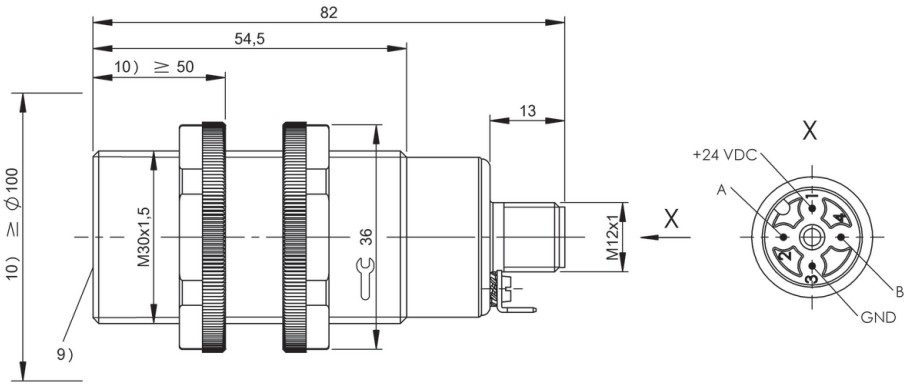

9) Sensing surface, 10) Clear zone

	BIS003U BIS003C			BIS003W BIS003F		
	metal-free	on metal	flush in metal	metal-free	on metal	flush in metal
	0-70	15-45	15-40	0-25	3-12	3-10
	±35			±15		
	±35			±15	±12	±9
	±35			±15	±12	±8
	±35			±15	±12	±8
	±35			±15	±9	±7
	±35			±15	±0	
	±35	±25	±20	±15		
	±35	±25	±20	±15		
	±35	±25	±20	±15		
	±35	±20	±20	±13		
	±35	±20	±20			
	±35	±15	±15			
	±35	±12	±0			
	±35	±0				
	±35					
	±35					
	±35					
	±35					

Do you need more details? Our Product Finder at www.balluff.com provides you with product-specific information, including technical drawings, data sheets, user guides and more for each individual product. All items are available for download.

	BIS00U6 BIS VL-301-001-S4
Product Group	LF (125 kHz)
Dimension	80 x 80 x 40 mm
Installation	metal-free (clear zone)
Antenna type	round
Connection	M12x1 connector, 4-pin
Housing material	PBT
Interface	—
Operating voltage Ub	—
Storage temperature	-20...85 °C
Ambient temperature	0...70 °C
Protection degree	IP67
Approval/Conformity	CE

Appropriate data carrier

	BIS0033			BIS0036			BIS0039			BIS003N BIS017H		BIS003R		
Data carrier distance to metal	metal-free	on metal	flush in metal	metal-free	on metal	flush in metal	metal-free	on metal	flush in metal	metal-free		metal-free	on metal	flush in metal
Data carrier clear zone														
Working distance for writing	0-40	15-30	15-25	0-55	15-40	15-35	0-70	20-50	20-50	0-32				
Working distance for reading	0-40	15-30	15-25	0-55	15-40	15-35	0-70	20-50	20-50	0-32		0-70	20-50	20-50
Offset at distance														
0	±30			±35			±40			±24		±40		
3	±30			±35			±40			±24		±40		
7	±30			±35			±40			±24		±40		
8	±30			±35			±40			±24		±40		
10	±30			±35			±40			±24		±40		
12	±30			±35			±40			±24		±40		
15	±30	±20	±15	±35	±20	±20	±40			±24		±40		
18	±30	±15	±10	±35	±20	±20	±40			±24		±40		
20	±30	±15	±10	±35	±20	±20	±40	±25	±22	±24		±40	±25	±22
25	±30	±10	±0	±35	±20	±15	±40	±25	±22	±24		±40	±25	±22
30	±30	±0		±35	±20	±15	±40	±25	±22	±24		±40	±25	±22
35	±30			±35	±15	±0	±40	±20	±15			±40	±20	±15
40	±30			±35	±0		±40	±15	±15			±40	±15	±15
45				±35			±40	±15	±10			±40	±15	±10
50				±35			±40	±0	±0			±40	±0	±0
55				±35			±40					±40		
60							±40					±40		
70							±40					±40		

Dimensions in mm

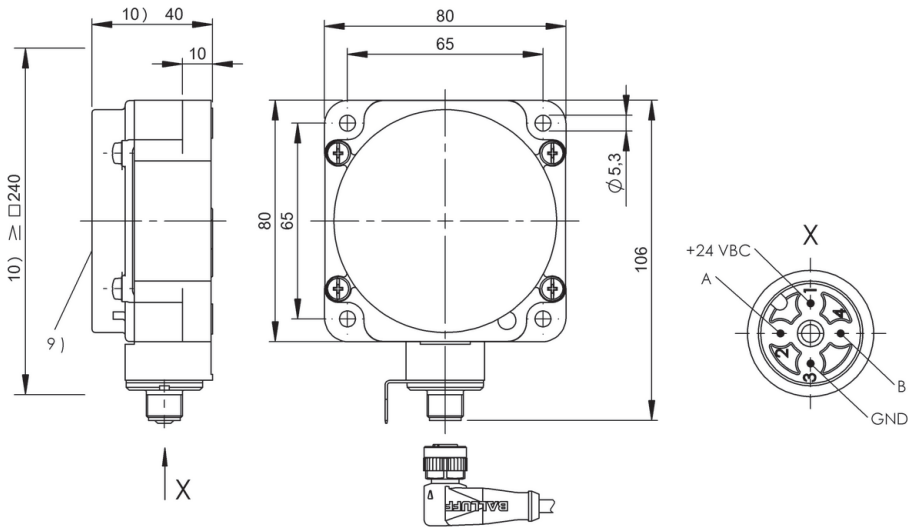

9) Sensing surface, 10) Clear zone

	BIS003T BIS0038			BIS003U BIS003C		
	metal-free	on metal	flush in metal	metal-free	on metal	flush in metal
	0-70	20-45	20-40	0-100	25-60	25-55
	±40			±45		
	±40			±45		
	±40			±45		
	±40			±45		
	±40			±45		
	±40			±45		
	±40			±45		
	±40			±45		
	±40	±24	±20	±45	±30	±30
	±40	±24	±20	±45	±30	±30
	±40	±20	±20	±45	±30	±25
	±40	±20	±15	±45	±30	±25
	±40	±18	±0	±45	±25	±20
	±40	±0		±45	±20	±20
	±40			±45	±10	±0
	±40			±45	±0	
	±40			±45		
	±40			±45		
				±45		

	BIS015U BIS VL-308-001-S4
Product Group	LF (125 kHz)
Dimension	90 x 51 x 160 mm
Installation	metal-free (clear zone)
Antenna type	round
Connection	M12x1 connector, 4-pin
Housing material	ABS
Interface	—
Operating voltage Ub	—
Storage temperature	-20...85 °C
Ambient temperature	0...70 °C
Protection degree	IP67
Approval/Conformity	CE

Suitable data carriers on request

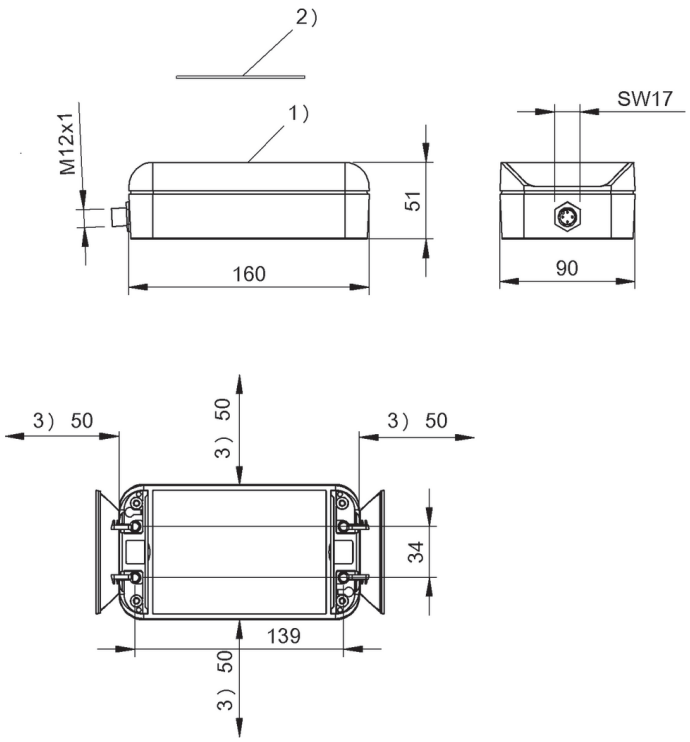

1) Sensing surface, 2) Data carrier, 3) Clear zone

	BIS00UJ BIS VL-306-001-S4
Product Group	LF (125 kHz)
Dimension	Ø 12 x 42.5 mm
Installation	metal-free (clear zone)
Antenna type	round
Connection	M12x1-Male, 4-pole, 0.50 m, PU1
Housing material	Brass, interface aluminum
Interface	—
Operating voltage Ub	—
Storage temperature	-20...85 °C
Ambient temperature	0...70 °C
Protection degree	IP67
Approval/Conformity	CE

Appropriate data carrier

	BIS0034		BIS003E		BIS003W BIS003F	
Data carrier distance to metal	metal-free		metal-free		metal-free	
Data carrier clear zone						
Working distance for writing	0-12		0-7			
Working distance for reading	0-12		0-7		0-7	
Offset at distance						
0	±7		±4		±4	
3	±7		±4		±4	
7	±7		±4		±2	
8	±7					
10	±7					
12	±7					
15						
18						
20						
25						
30						
35						
40						

Dimensions in mm

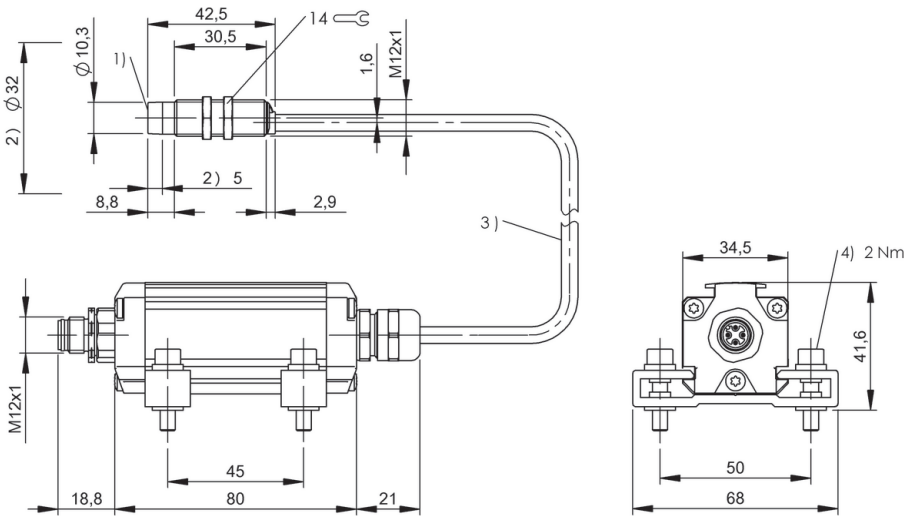

1) Sensing surface, 2) Clear zone, 3) Cable length see text, 4) Tightening torque

	BIS00UF BIS VL-302-001-S4
Product Group	LF (125 kHz)
Dimension	Ø 18 x 75 mm
Installation	metal-free (clear zone)
Antenna type	round
Connection	M12x1-Male, 4-pole, 0.50 m, PVC
Housing material	Brass, interface aluminum
Interface	—
Operating voltage Ub	—
Storage temperature	-20...85 °C
Ambient temperature	0...70 °C
Protection degree	IP67
Approval/Conformity	CE

Appropriate data carrier

	BIS0033			BIS0036			BIS0039				BIS003R			BIS003T BIS0038		
Data carrier distance to metal	metal-free	on metal	flush in metal	metal-free	on metal	flush in metal	metal-free	on metal	flush in metal		metal-free	on metal	flush in metal	metal-free	on metal	flush in metal
Data carrier clear zone																
Working distance for writing	0-20	8-15	8-15	0-25	10-20	10-20	0-30	10-25	10-20							
Working distance for reading	0-20	8-15	8-15	0-25	10-20	10-20	0-30	10-25	10-20		0-25	8-15	8-15	0-30	10-20	10-20
Offset at distance																
0	±10			±12			±15			0	±13			±15		
3	±10			±12			±15			3	±13			±15		
7	±10			±12			±15			4	±13			±15		
8	±10	±6	±6	±12			±15			8	±13	±8	±6	±15		
10	±10	±5	±5	±12	±10	±8	±15	±15	±10	10	±13	±8	±6	±15	±10	±10
12	±10	±4	±4	±12	±10	±8	±15	±15	±10	12	±13	±8	±6	±15	±10	±10
15	±10	±0	±0	±12	±5	±5	±15	±15	±5	15	±13	±0	±0	±15	±10	±8
18	±10			±12	±0	±0	±15	±10	±0	18	±13			±15	±0	±0
20	±10			±12	±0	±0	±15	±10	±0	20	±13			±15	±0	±0
25				±12			±15	±0		25	±13			±15		
30							±15			30				±15		
35										35						
40										40						

Dimensions in mm

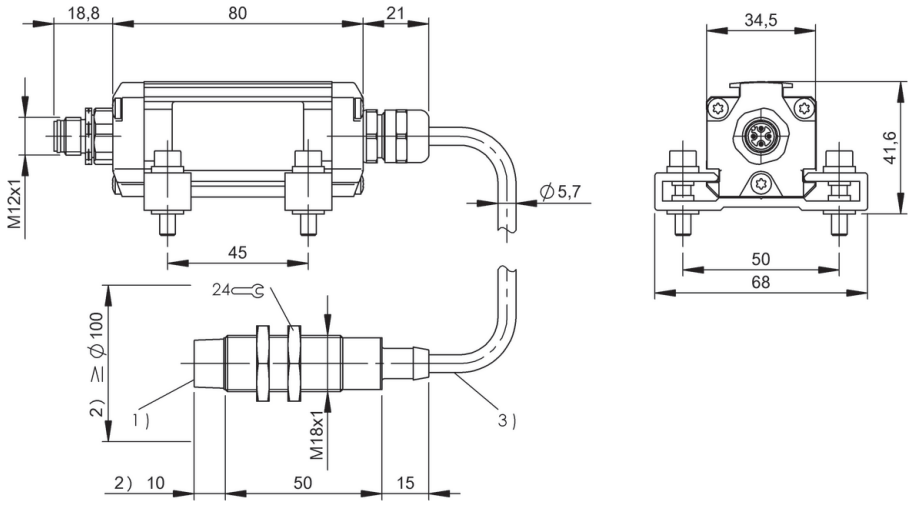

1) Sensing surface, 2) Clear zone, 3) Cable length

	BIS003U BIS003C			BIS003W BIS003F		
	metal-free	on metal	flush in metal	metal-free	on metal	flush in metal
	0-40	10-25	10-20	0-15	4-10	3-8
	±20			±6		
	±20			±6		±5
	±20			±6	±7	±4
	±20			±6	±6	±3
	±20	±15	±8	±6	±5	
	±20	±15	±8	±6		
	±20	±15	±6	±6		
	±20	±10	±0			
	±20	±10	±0			
	±20	±0				
	±20					
	±20					
	±20					

Do you need more details? Our Product Finder at www.balluff.com provides you with product-specific information, including technical drawings, data sheets, user guides and more for each individual product. All items are available for download.

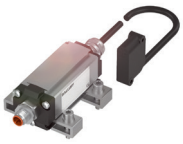

	BIS00UK BIS VL-350-001-S4
Product Group	LF (125 kHz)
Dimension	12 x 26 x 40 mm
Installation	metal-free (clear zone)
Antenna type	Rod
Connection	M12x1-Male, 4-pole, 0.50 m, PU
Housing material	ABS, GF16, interface aluminum
Interface	—
Operating voltage Ub	—
Storage temperature	-20...85 °C
Ambient temperature	0...70 °C
Protection degree	IP67
Approval/Conformity	CE

Appropriate data carrier

	BIS003N		
Data carrier distance to metal	metal-free	on metal	flush in metal
Data carrier clear zone			
Working distance for writing	0-17	0-24	0-24
Working distance for reading	0-17	0-24	0-24
Offset at distance			
0	±18	±20	±20
3	±18	±20	±20
7	±18	±20	±20
8	±18	±20	±20
10	±18	±20	±20
12	±10	±20	±20
15	±10	±20	±20
18		±14	±14
20		±14	±14
25		±14	±14

Dimensions in mm

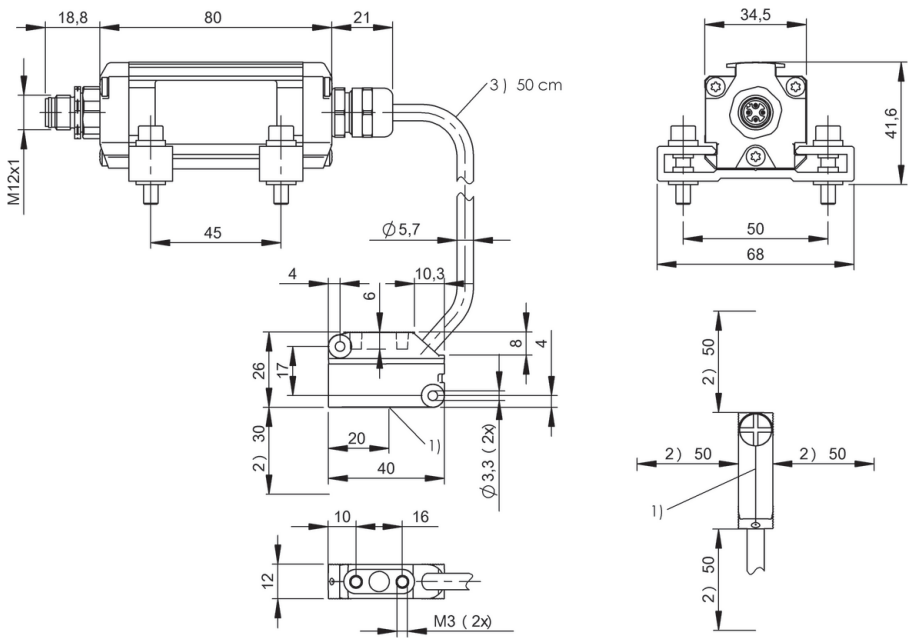

1) Sensing surface, 2) Clear zone, 3) Cable length

Do you need more details? Our Product Finder at www.balluff.com provides you with product-specific information, including technical drawings, data sheets, user guides and more for each individual product. All items are available for download.

	BIS00UH BIS VL-304-001-S4
Product Group	LF (125 kHz)
Dimension	25 x 10 x 50 mm
Installation	metal-free (clear zone)
Antenna type	round
Connection	M12x1-Male, 4-pole, 0.50 m, PU
Housing material	ABS, GF16, interface aluminum
Interface	—
Operating voltage Ub	—
Storage temperature	-20...85 °C
Ambient temperature	0...70 °C
Protection degree	IP67
Approval/Conformity	CE

Appropriate data carrier

	BIS0033			BIS0036			BIS0039				BIS003R			BIS003T BIS0038		
Data carrier distance to metal	metal-free	on metal	flush in metal	metal-free	on metal	flush in metal	metal-free	on metal	flush in metal		metal-free	on metal	flush in metal	metal-free	on metal	flush in metal
Data carrier clear zone																
Working distance for writing	0-20	8-15	8-15	0-25	10-20	10-20	0-30	10-25	10-20							
Working distance for reading	0-20	8-15	8-15	0-25	10-20	10-20	0-30	10-25	10-20		0-25	8-15	8-15	0-30	10-20	10-20
Offset at distance																
0	±10			±12			±15			0	±13			±15		
3	±10			±12			±15			3	±13			±15		
7	±10			±12			±15			4	±13			±15		
8	±10	±6	±6	±12			±15			8	±13	±8	±6	±15		
10	±10	±5	±5	±12	±10	±8	±15	±15	±10	10	±13	±8	±6	±15	±10	±10
12	±10	±3	±3	±12	±10	±8	±15	±15	±10	12	±13	±8	±6	±15	±10	±10
15	±10	±0	±0	±12	±5	±5	±15	±15	±5	15	±13	±0	±0	±15	±10	±8
18	±10			±12	±0	±0	±15	±10	±0	18	±13			±15	±0	±0
20	±10			±12	±0	±0	±15	±10	±0	20	±13			±15	±0	±0
25				±12			±15	±0		25	±13			±15		
30							±15			30				±15		
35										35						
40										40						

Dimensions in mm

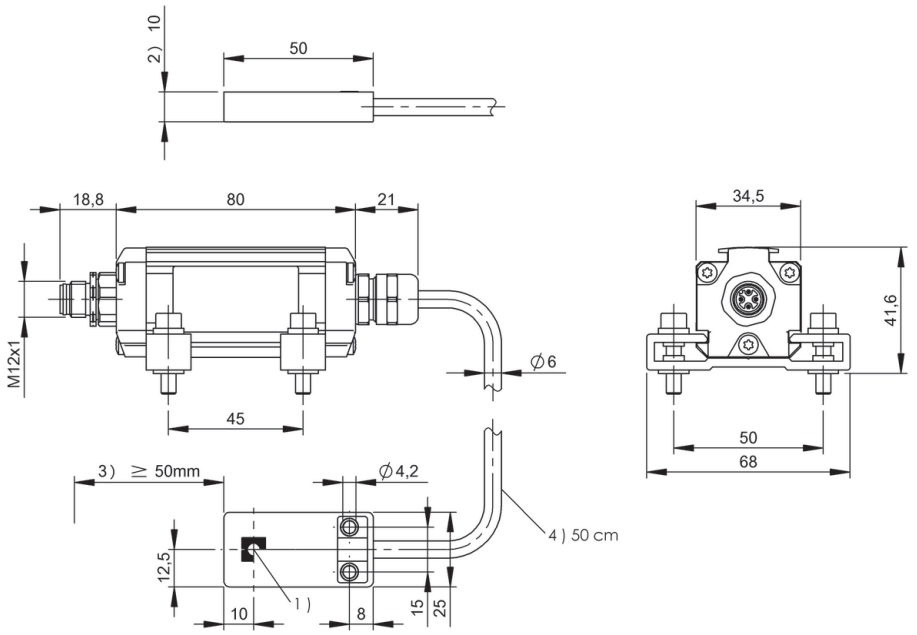

1) Sensing surface, 2) Clear zone, 3) Clear zone surrounding, 4) Cable length

	BIS003U BIS003C			BIS003W BIS003F		
	metal-free	on metal	flush in metal	metal-free	on metal	flush in metal
	0-40	10-25	10-20	0-15	4-10	3-8
	±20			±6		
	±20			±6		±5
	±20			±6	±7	±3
	±20			±6	±6	±3
	±20	±15	±8	±6	±5	
	±20	±15	±8	±6		
	±20	±15	±6	±6		
	±20	±10	±0			
	±20	±10	±0			
	±20	±0				
	±20					
	±20					
	±20					

Do you need more details? Our Product Finder at www.balluff.com provides you with product-specific information, including technical drawings, data sheets, user guides and more for each individual product. All items are available for download.

For read/write heads BIS VM (HF 13.56 MHz), BIS VL (LF 125 kHz) and BIS VU (UHF 860...960 MHz)	**BIS013U** BIS V-6108-048-C002	
Product Group	Multi-Frequency Processor	
Interface	Profinet I/O (IRT), Profinet I/O (IRT) 2-port switch	
IO-Link-Master-Port	max. 500 mA	
Supported RFID technologies	LF 125 kHz (BIS VL), HF 13.56 MHz (BIS VM), UHF 860...960 MHz (BIS VU)	
Number of connectable R/W heads / antennas	4	
Operating voltage Ub	24 V DC LPS Class 2	
Housing material	Zinc, Die casting	
Ambient temperature	0...60 °C	
IP rating	IP65, with connector	
Approval/Conformity	CE, EAC, cULus, WEEE	
Connection	2x M12x1-Female, 4-pin, D-coded 7/8“-Male, 5-pin	
Productview	Page 472	

* Use adapter **BIS0FCK** to connect read/write heads **BIS C (LF 70/455 kHz).**

	BIS01AE BIS V-6108-048-C007	BIS013W * BIS V-6108-048-C102	BIS01AF * BIS V-6108-048-C107
	Multi-Frequency Processor	Multi-Frequency Processor	Multi-Frequency Processor
	Profinet I/O (IRT), Profinet I/O (IRT) 2-port switch	Profinet I/O (IRT), Profinet I/O (IRT) 2-port switch	Profinet I/O (IRT), Profinet I/O (IRT) 2-port switch
	max. 500 mA	max. 500 mA	max. 500 mA
	LF 125 kHz (BIS VL), HF 13.56 MHz (BIS VM), UHF 860...960 MHz (BIS VU)	LF 125 kHz (BIS VL), LF 70/455 kHz (BIS C), HF 13.56 MHz (BIS VM), UHF 860...960 MHz (BIS VU)	LF 125 kHz (BIS VL), LF 70/455 kHz (BIS C), HF 13.56 MHz (BIS VM), UHF 860...960 MHz (BIS VU)
	4	4	4
	24 V DC LPS Class 2	24 V DC LPS Class 2	24 V DC LPS Class 2
	Zinc, Die casting	Zinc, Die casting	Zinc, Die casting
	0...60 °C	0...60 °C	0...60 °C
	IP65, with connector	IP65, with connector	IP65, with connector
	CE, EAC, cULus, WEEE	CE, EAC, cULus, WEEE	CE, EAC, cULus, WEEE
	2x M12x1-Female, 4-pin, D-coded M12x1-Male, 5-pin	2x M12x1-Female, 4-pin, D-coded 7/8“-Male, 5-pin	2x M12x1-Female, 4-pin, D-coded M12x1-Male, 5-pin
	Page 211	Page 472	Page 211

For read/write heads BIS VM (HF 13.56 MHz), BIS VL (LF 125 kHz) and BIS VU (UHF 860...960 MHz)	**BIS00T3** BIS V-6102-019-C001	
Product Group	Multi-Frequency Processor	
Interface	Profibus DP Slave galvanically isolated	
IO-Link-Master-Port	max. 500 mA	
Supported RFID technologies	LF 125 kHz (BIS VL), HF 13.56 MHz (BIS VM), UHF 860...960 MHz (BIS VU)	
Number of connectable R/W heads / antennas	4	
Operating voltage Ub	24 V DC LPS Class 2	
Housing material	Zinc, Die casting	
Ambient temperature	0...60 °C	
IP rating	IP65, with connector	
Approval/Conformity	CE, EAC, cULus, WEEE	
Connection	M12x1-Male, 5-pin, B-coded M12x1-Female, 5-pin, B-coded 7/8“-Male, 5-pin	
Productview	Page 472	

* Use adapter **BIS0FCK** to connect read/write heads **BIS C (LF 70/455 kHz).**

	BIS012E * BIS V-6102-019-C101	BIS01AA BIS V-6107-039-C007	BIS01AC * BIS V-6107-039-C107
	Multi-Frequency Processor	Multi-Frequency Processor	Multi-Frequency Processor
	Profibus DP Slave galvanically isolated	TCP/IP, USB	TCP/IP, USB
	max. 500 mA	max. 1.700 mA	max. 1.700 mA
	LF 125 kHz (BIS VL), LF 70/455 kHz (BIS C), HF 13.56 MHz (BIS VM), UHF 860...960 MHz (BIS VU)	LF 125 kHz (BIS VL), HF 13.56 MHz (BIS VM), UHF 860...960 MHz (BIS VU)	LF 125 kHz (BIS VL), LF 70/455 kHz (BIS C), HF 13.56 MHz (BIS VM), UHF 860...960 MHz (BIS VU)
	4	4	4
	24 V DC LPS Class 2	24 V DC LPS Class 2	24 V DC LPS Class 2
	Zinc, Die casting	Zinc, Die casting	Zinc, Die casting
	0...60 °C	0...60 °C	0...60 °C
	IP65, with connector	IP65, with connector	IP65, with connector
	CE, EAC, cULus, WEEE	CE, EAC, cULus, WEEE	CE, EAC, cULus, WEEE
	M12x1-Male, 5-pin, B-coded M12x1-Female, 5-pin, B-coded 7/8“-Male, 5-pin	M12x1-Female, 4-pin, D-coded M12x1-Female, 5-pin, A-coded M12x1-Male, 5-pin	M12x1-Female, 4-pin, D-coded M12x1-Female, 5-pin, A-coded M12x1-Male, 5-pin
	Page 472	Page 210	Page 210

For read/write heads BIS VM (HF 13.56 MHz), BIS VL (LF 125 kHz) and BIS VU (UHF 860...960 MHz)	**BIS0186** BIS V-6107-039-C005	
Product Group	Multi-Frequency Processor	
Interface	Ethernet TCP/IP, USB	
IO-Link-Master-Port	max. 1.700 mA	
Supported RFID technologies	LF 125 kHz (BIS VL), HF 13.56 MHz (BIS VM), UHF 860...960 MHz (BIS VU)	
Number of connectable R/W heads / antennas	4	
Operating voltage Ub	24 V DC LPS Class 2	
Housing material	Zinc, Die casting	
Ambient temperature	0...60 °C	
IP rating	IP65, with connector	
Approval/Conformity	CE, EAC, cULus, WEEE	
Connection	M12x1-Female, 4-pin, D-coded M12x1-Female, 5-pin, A-coded 7/8“-Male, 5-pin	
Productview	Page 473	

* Use adapter **BIS0FCK** to connect read/write heads **BIS C (LF 70/455 kHz).**

	BIS018J BIS V-6107-039-C006	BIS0187 * BIS V-6107-039-C105	BIS018K * BIS V-6107-039-C106
	Multi-Frequency Processor	Multi-Frequency Processor	Multi-Frequency Processor
	Ethernet TCP/IP, USB	Ethernet TCP/IP, USB	Ethernet TCP/IP, USB
	max. 1.700 mA	max. 1.700 mA	max. 1.700 mA
	LF 125 kHz (BIS VL), HF 13.56 MHz (BIS VM), UHF 860...960 MHz (BIS VU)	LF 125 kHz (BIS VL), LF 70/455 kHz (BIS C), HF 13.56 MHz (BIS VM), UHF 860...960 MHz (BIS VU)	LF 125 kHz (BIS VL), LF 70/455 kHz (BIS C), HF 13.56 MHz (BIS VM), UHF 860...960 MHz (BIS VU)
	4	4	4
	24 V DC LPS Class 2	24 V DC LPS Class 2	24 V DC LPS Class 2
	Zinc, Die casting	Zinc, Die casting	Zinc, Die casting
	0...60 °C	0...60 °C	0...60 °C
	IP65, with connector	IP65, with connector	IP65, with connector
	CE, EAC, cULus, WEEE	CE, EAC, cULus, WEEE	CE, EAC, cULus, WEEE
	M12x1-Female, 4-pin, D-coded M12x1-Female, 5-pin, A-coded 7/8“-Male, 4-pin	M12x1-Female, 4-pin, D-coded M12x1-Female, 5-pin, A-coded 7/8“-Male, 5-pin	M12x1-Female, 4-pin, D-coded M12x1-Female, 5-pin, A-coded 7/8“-Male, 4-pin
	Page 473	Page 473	Page 473

For read/write heads BIS VM (HF 13.56 MHz), BIS VL (LF 125 kHz) and BIS VU (UHF 860...960 MHz)	**BIS012F** BIS V-6106-034-C002	
Product Group	Multi-Frequency Processor	
Interface	Ethernet/IP	
IO-Link-Master-Port	max. 500 mA	
Supported RFID technologies	LF 125 kHz (BIS VL), HF 13.56 MHz (BIS VM), UHF 860...960 MHz (BIS VU)	
Number of connectable R/W heads / antennas	4	
Operating voltage Ub	24 V DC LPS Class 2	
Housing material	Zinc, Die casting	
Ambient temperature	0...60 °C	
IP rating	IP65, with connector	
Approval/Conformity	CE, EAC, cULus, WEEE	
Connection	2x M12x1-Female, 4-pin, D-coded 7/8“-Male, 5-pin	
Productview	Page 436	

* Use adapter **BIS0FCK** to connect read/write heads **BIS C (LF 70/455 kHz).**

	BIS0122 BIS V-6106-034-C004	BIS014C * BIS V-6106-034-C102	BIS0146 BIS V-6106-034-C104
	Multi-Frequency Processor	Multi-Frequency Processor	Multi-Frequency Processor
	Ethernet/IP	Ethernet/IP	Ethernet/IP
	max. 500 mA	max. 500 mA	max. 500 mA
	LF 125 kHz (BIS VL), HF 13.56 MHz (BIS VM), UHF 860...960 MHz (BIS VU)	LF 125 kHz (BIS VL), LF 70/455 kHz (BIS C), HF 13.56 MHz (BIS VM), UHF 860...960 MHz (BIS VU)	LF 125 kHz (BIS VL), LF 70/455 kHz (BIS C), HF 13.56 MHz (BIS VM), UHF 860...960 MHz (BIS VU)
	4	4	4
	24 V DC LPS Class 2	24 V DC LPS Class 2	24 V DC LPS Class 2
	Zinc, Die casting	Zinc, Die casting	Zinc, Die casting
	0...60 °C	0...60 °C	0...60 °C
	IP65, with connector	IP65, with connector	IP65, with connector
	CE, EAC, cULus, WEEE	CE, EAC, cULus, WEEE	CE, EAC, cULus, WEEE
	2x M12x1-Female, 4-pin, D-coded 7/8“-Male, 4-pin	2x M12x1-Female, 4-pin, D-coded 7/8“-Male, 5-pin	2x M12x1-Female, 4-pin, D-coded 7/8“-Male, 4-pin
	Page 436	Page 436	Page 436

Do you need more details? Our Product Finder at www.balluff.com provides you with product-specific information, including technical drawings, data sheets, user guides and more for each individual product. All items are available for download.

For read/write heads BIS VM (HF 13.56 MHz), BIS VL (LF 125 kHz) and BIS VU (UHF 860...960 MHz)	**BIS00U9** BIS V-6110-063-C002	
Product Group	Multi-Frequency Processor	
Interface	EtherCAT	
IO-Link-Master-Port	max. 500 mA	
Supported RFID technologies	LF 125 kHz (BIS VL), HF 13.56 MHz (BIS VM), UHF 860...960 MHz (BIS VU)	
Number of connectable R/W heads / antennas	4	
Operating voltage Ub	24 V DC LPS Class 2	
Housing material	Zinc, Die casting	
Ambient temperature	0...60 °C	
IP rating	IP65, with connector	
Approval/Conformity	CE, EAC, cULus, WEEE	
Connection	2x M12x1-Female, 4-pin, D-coded 7/8“-Male, 5-pin	
Productview	Page 437	

* Use adapter **BIS0FCK** to connect read/write heads **BIS C (LF 70/455 kHz).**

	BIS0147 BIS V-6110-063-C102	BIS010P BIS V-6111-073-C003	BIS014E * BIS V-6111-073-C103
	Multi-Frequency Processor	Multi-Frequency Processor	Multi-Frequency Processor
	EtherCAT	CC-Link	CC-Link
	max. 500 mA	max. 500 mA	max. 500 mA
	LF 125 kHz (BIS VL), LF 70/455 kHz (BIS C), HF 13.56 MHz (BIS VM), UHF 860...960 MHz (BIS VU)	LF 125 kHz (BIS VL), HF 13.56 MHz (BIS VM)	LF 125 kHz (BIS VL), LF 70/455 kHz (BIS C), HF 13.56 MHz (BIS VM)
	4	4	4
	24 V DC LPS Class 2	24 V DC LPS Class 2	24 V DC LPS Class 2
	Zinc, Die casting	Zinc, Die casting	Zinc, Die casting
	0...60 °C	0...60 °C	0...60 °C
	IP65, with connector	IP65, with connector	IP65, with connector
	CE, EAC, cULus, WEEE	CE, EAC, cULus, WEEE	CE, EAC, cULus, WEEE
	2x M12x1-Female, 4-pin, D-coded 7/8“-Male, 5-pin	M12x1-Male, 5-pin, A-coded M12x1-Female, 5-pin, A-coded 7/8“-Male, 5-pin	M12x1-Male, 5-pin, A-coded M12x1-Female, 5-pin, A-coded 7/8“-Male, 5-pin
	Page 437	Page 437	Page 437

For read/write heads BIS L-400-043...	**BAE003U** BIS Z-EL-001-ETHERNET	
Product Group	LF (125 kHz)	
Interface	Ethernet TCP/IP	
Supported RFID technologies	LF 125 kHz (BIS L, Easy Loop)	
Number of connectable R/W heads / antennas	16	
Operating voltage Ub	19.2...28.8 VDC	
Housing material	ABS	
Ambient temperature	0...60 °C	
Protection degree	IP65 with connector	
Approval/Conformity	CE	
Connection	Female, 4-pole, D-coded Male, 5-pole	
Productview	Page 438	

Do you need more details? Our Product Finder at www.balluff.com provides you with product-specific information, including technical drawings, data sheets, user guides and more for each individual product. All items are available for download.

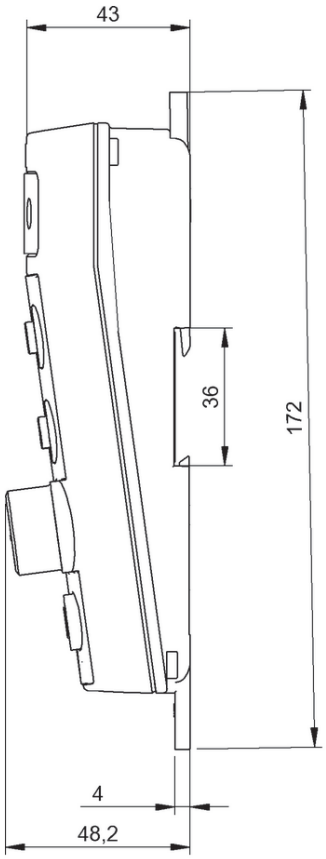

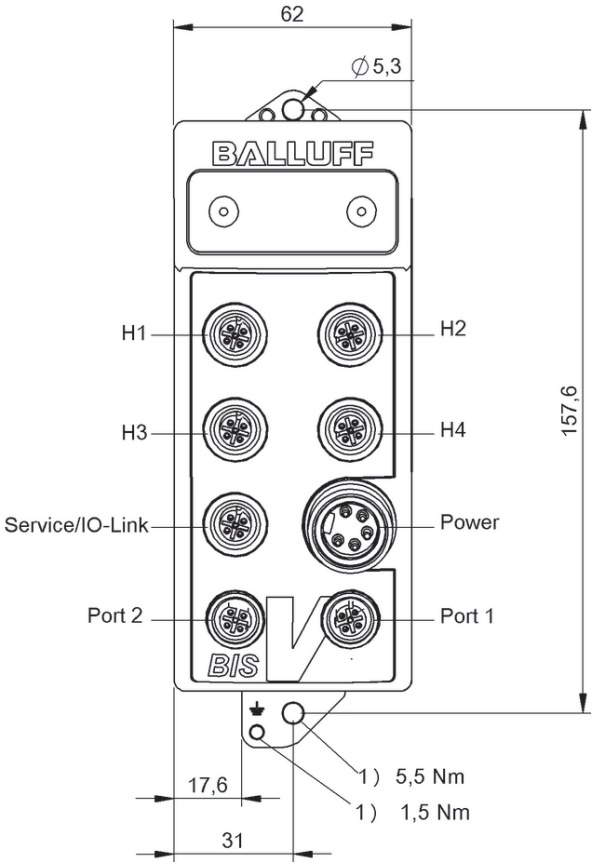

1) Tightening torque

BIS013U, BIS013W

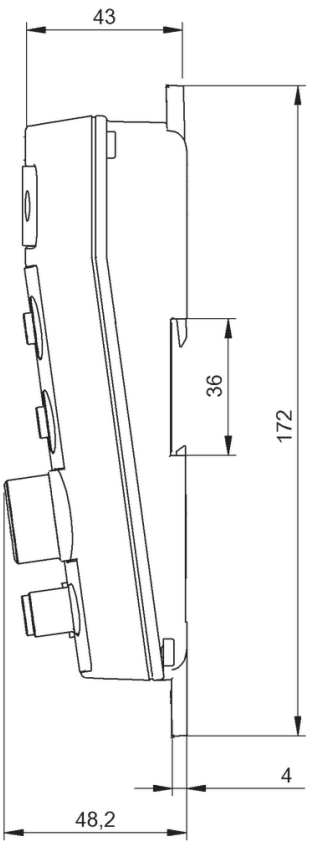

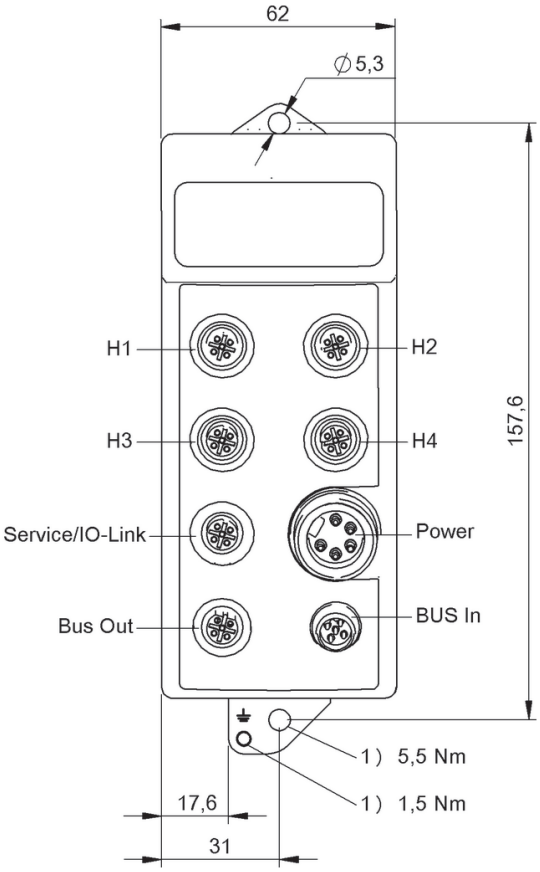

1) Tightening torque

BIS00T3, BIS012E

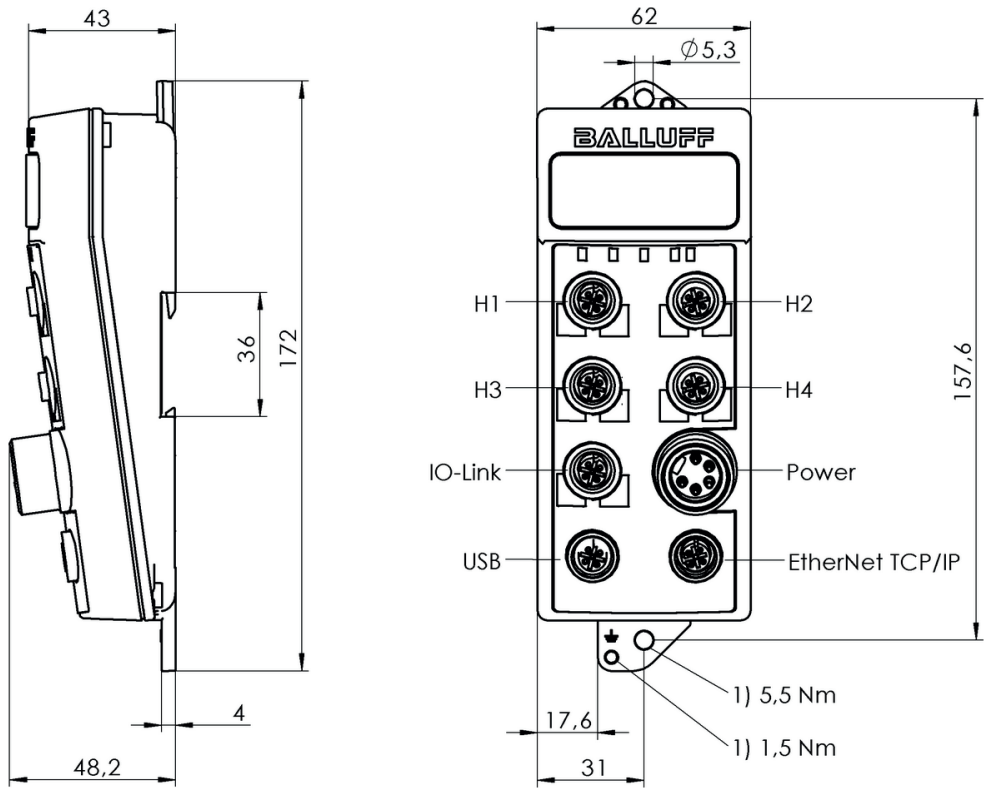

1) Tightening torque

BIS0186, BIS0187

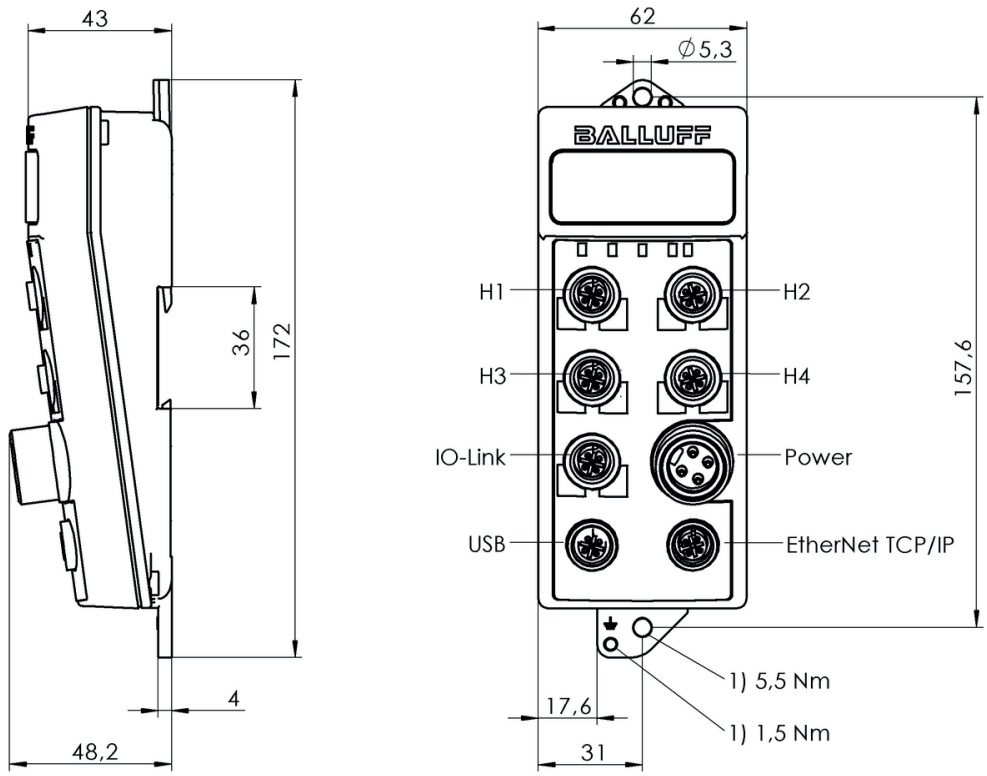

1) Tightening torque

BIS018J, BIS018K

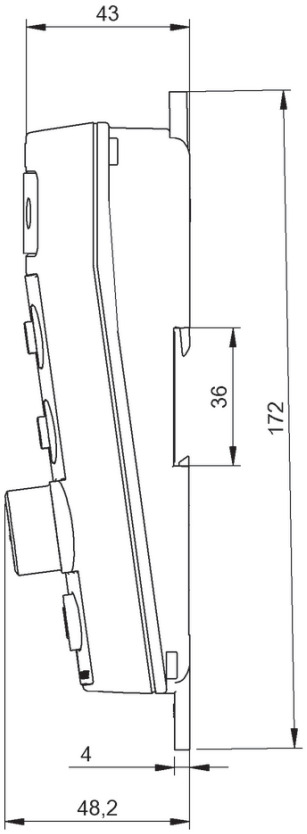

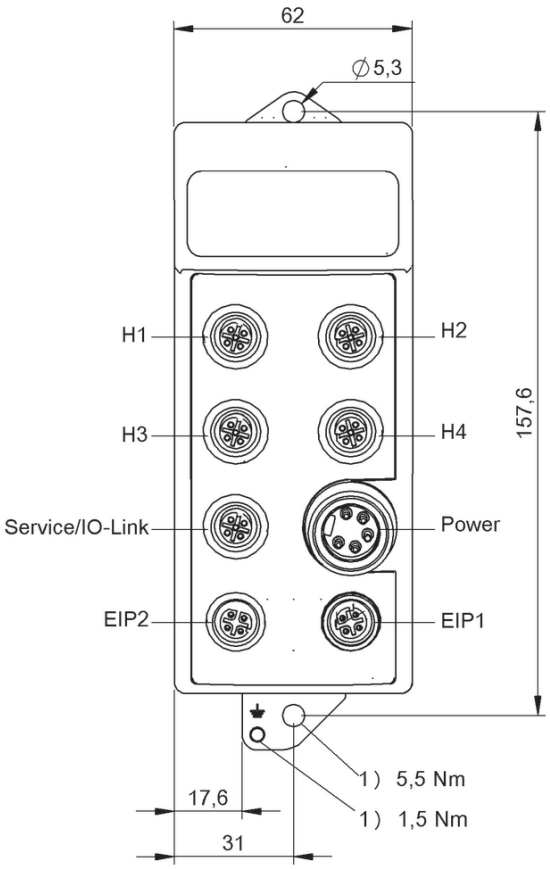

1) Tightening torque

BIS012F, BIS014C

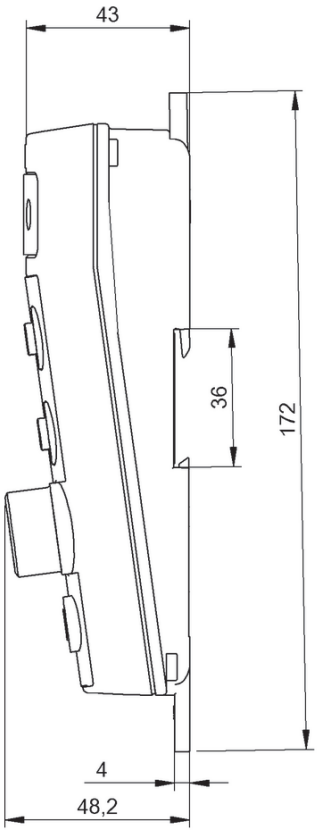

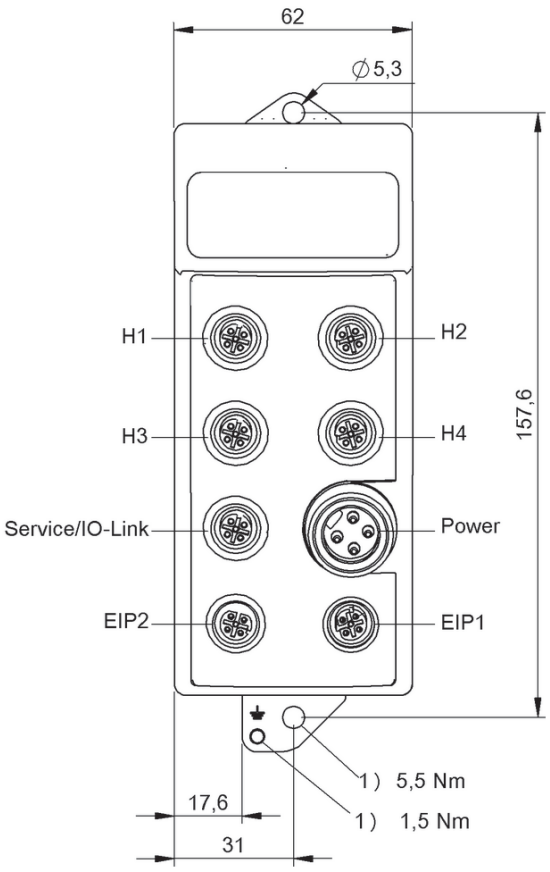

1) Tightening torque

BIS0122, BIS0146

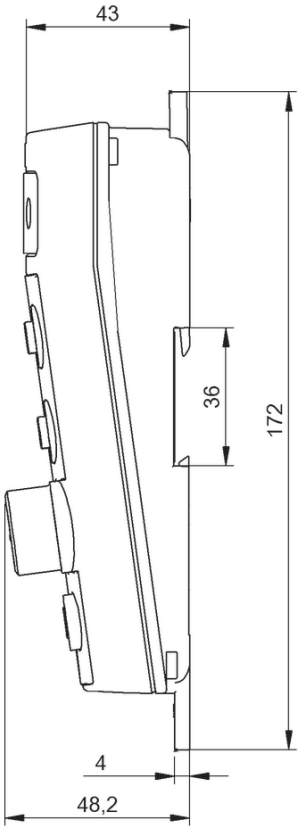

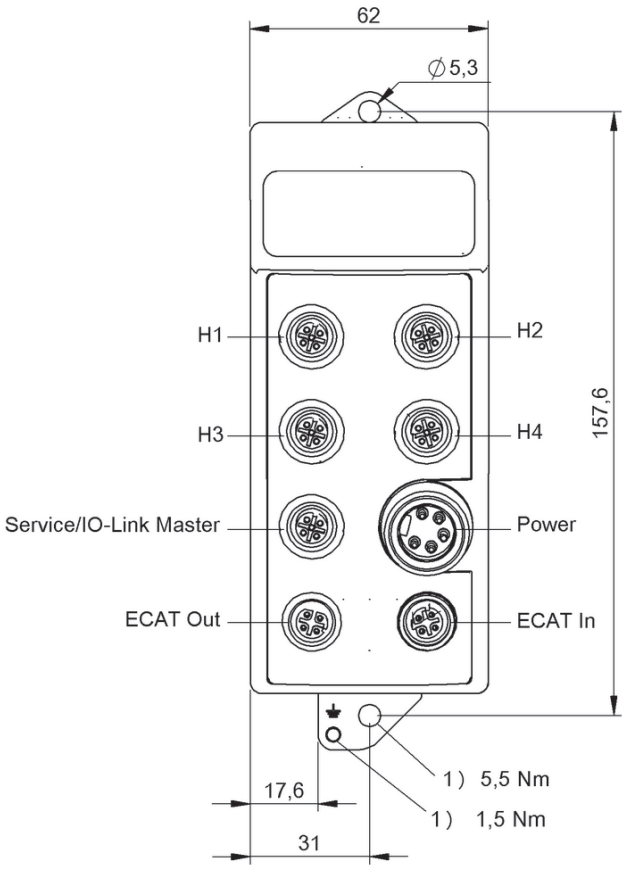

1) Tightening torque

BIS00U9, BIS0147

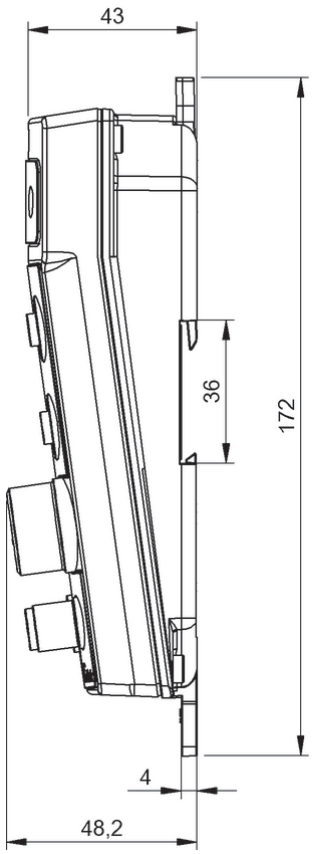

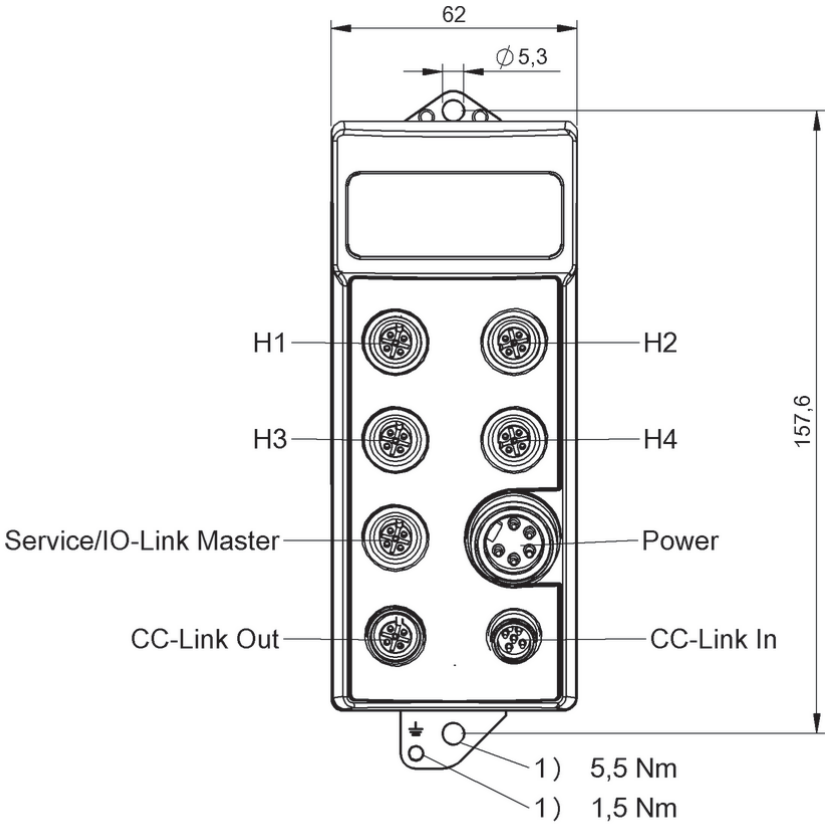

1) Tightening torque

BIS010P, BIS014E

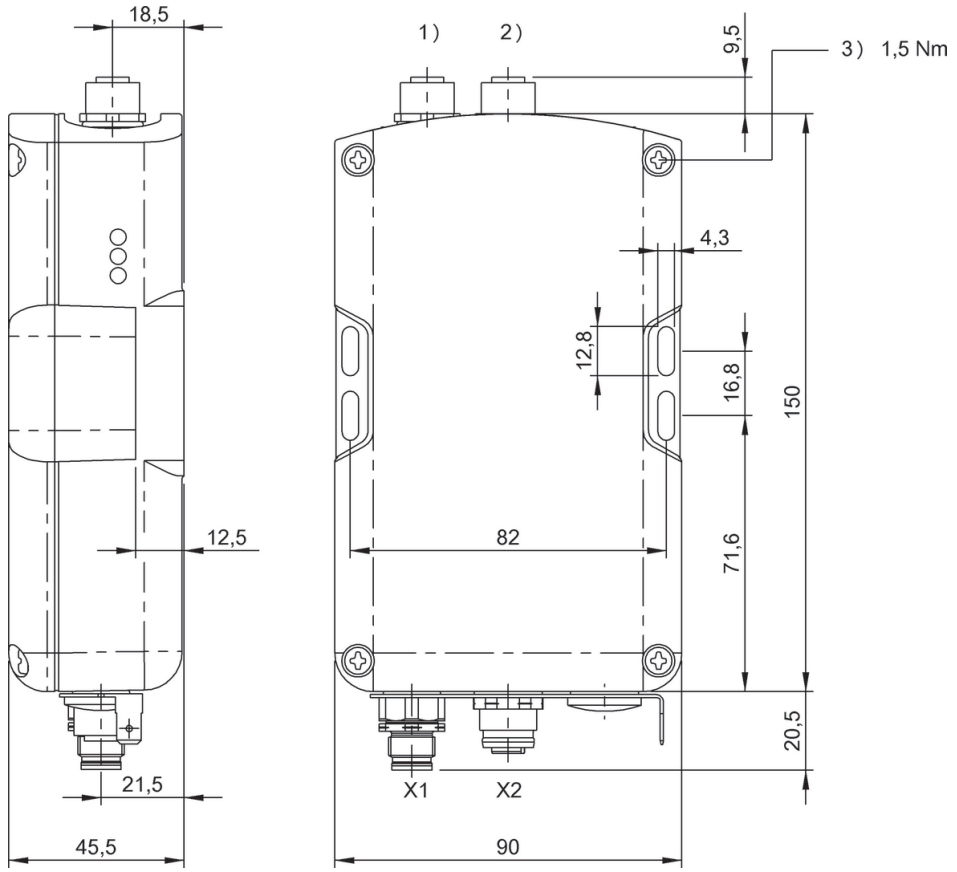

1) Line 1, 2) Line 2, 3) Tightening torque

BAE003U

	BIS00C5 BIS L-400-035-001-00-S115
Product Group	LF (125 kHz)
Dimension	40 x 41 x 120 mm
Installation	metal-free (clear zone)
Antenna type	round
Connection	Connector, M12x1 connector, 8-pin
Housing material	PBT
Interface	RS232
Operating voltage Ub	19.2...26.4 VDC
Ambient temperature	0...70 °C
Protection degree	IP67
Approval/Conformity	CE, UL-FILE E227256, Vol.X1, BIS

Appropriate data carrier

	BIS003R BIS0035			BIS003T BIS0038			BIS003U BIS003C			BIS003W BIS003F	
Data carrier distance to metal	metal-free	on metal	flush in metal	metal-free	on metal	flush in metal	metal-free	on metal	flush in metal	metal-free	
Data carrier clear zone											
Working distance for writing											
Working distance for reading	0-30	0-15	5-12	0-40	0-24	0-18	0-55	0-32	0-28	0-20	
Offset at distance											
0	±15	±10		±20	±12	±10	±30	±20	±18	±10	
3	±15	±10		±20	±12	±10	±30	±20	±18	±10	
5	±15	±10	±10	±20	±12	±10	±30	±20	±18	±10	
8	±15	±10	±7	±20	±12	±10	±30	±20	±18	±10	
10	±15	±10	±7	±20	±12	±10	±30	±20	±18	±10	
12	±15	±8	±7	±20	±12	±10	±30	±20	±18	±10	
15	±15	±8		±20	±12	±10	±30	±20	±18	±10	
18	±15			±20	±12	±10	±30	±20	±14		
20	±15			±20	±12		±30	±20	±14		
24	±15			±20	±10		±30	±20	±12		
28				±20			±30	±14	±12		
30				±20			±30	±14			
32				±20			±30	±14			
35				±20			±30				
40							±30				

Dimensions in mm

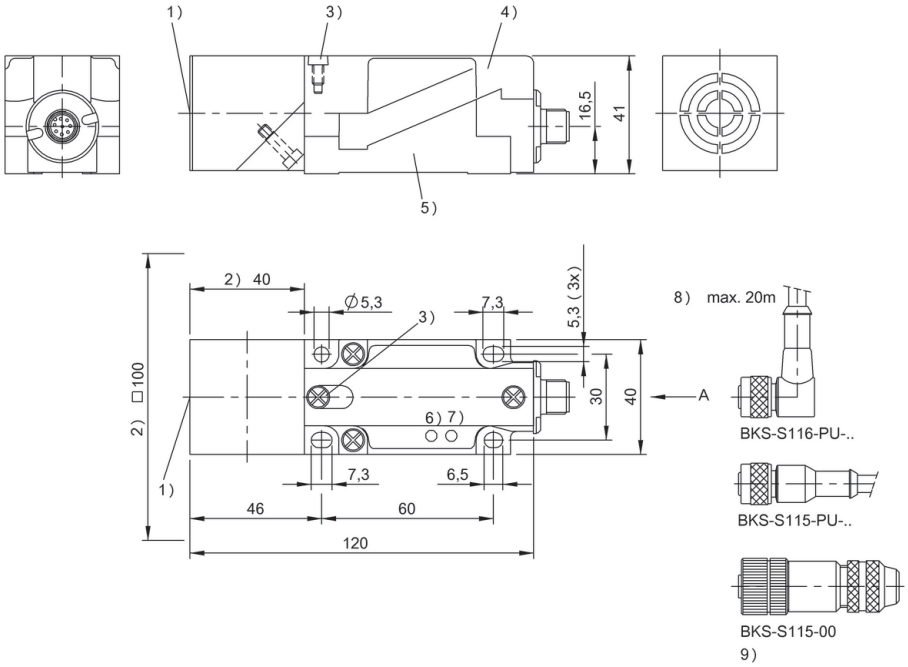

1) Sensing surface, 2) Clear zone, 3) Locking screw, 4) Module unit, 5) Mounting base, 6) Power, 7) Tag present, 8) Cable length, 9) no cable

Do you need more details? Our Product Finder at www.balluff.com provides you with product-specific information, including technical drawings, data sheets, user guides and more for each individual product. All items are available for download.

	BIS00C7 BIS L-400-035-002-00-S115
Product Group	LF (125 kHz)
Dimension	Ø 18 x 75 mm
Installation	metal-free (clear zone)
Antenna type	round
Connection	Connector, M12x1 connector, 8-pin, 0.50 m, PU
Housing material	Brass, interface PBT
Interface	RS232
Operating voltage Ub	19.2...26.4 VDC
Ambient temperature	0...70 °C
Protection degree	IP67
Approval/Conformity	CE, UL-FILE E227256, Vol.X1, BIS

Appropriate data carrier

	BIS003R BIS0035		BIS003T BIS0038		BIS003W BIS003F	
Data carrier distance to metal	metal-free		metal-free		metal-free	
Data carrier clear zone						
Working distance for writing						
Working distance for reading	0-23		0-27		0-16	
Offset at distance						
0	±12		±15		±8	
3	±12		±15		±8	
7	±12		±15		±8	
8	±12		±15		±8	
10	±12		±15		±8	
12	±12		±15		±4	
15	±12		±15		±4	
18			±15			
20			±15			
25			±6			

Dimensions in mm

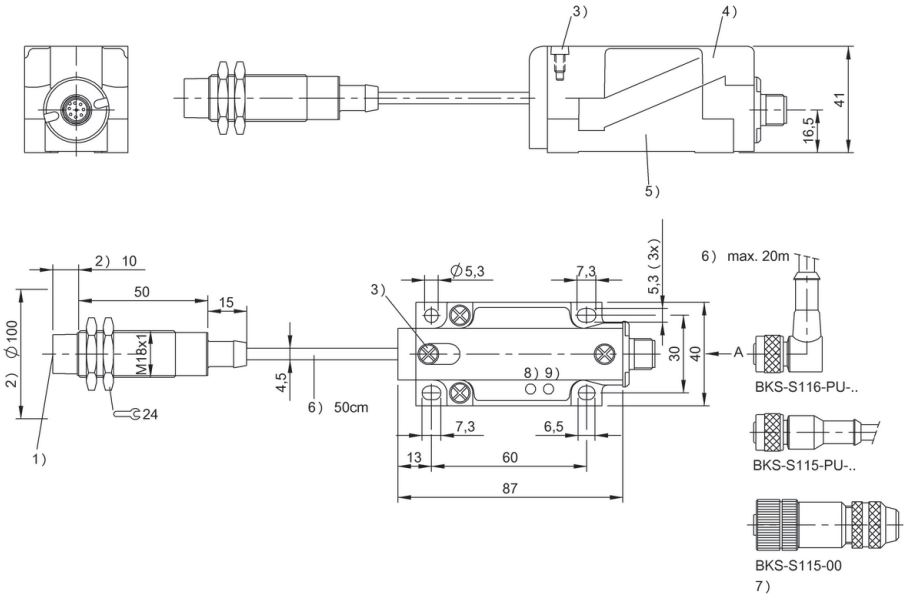

1) Sensing surface, 2) Clear zone, 3) Locking screw, 4) Module unit, 5) Mounting base, 6) Cable length, 7) no cable, 8) Power, 9) Tag present

Do you need more details? Our Product Finder at www.balluff.com provides you with product-specific information, including technical drawings, data sheets, user guides and more for each individual product. All items are available for download.

	BIS00C9 BIS L-400-035-003-00-S115
Product Group	LF (125 kHz)
Dimension	Ø 12 x 53 mm
Installation	metal-free (clear zone)
Antenna type	round
Connection	Connector, M12x1 connector, 8-pin, 0.50 m, PU
Housing material	Brass, interface PBT
Interface	RS232
Operating voltage Ub	19.2...26.4 VDC
Ambient temperature	0...70 °C
Protection degree	IP67
Approval/Conformity	CE, UL-FILE E227256, Vol.X1, BIS

Appropriate data carrier

	BIS003W BIS003F
Data carrier distance to metal	metal-free
Data carrier clear zone	
Working distance for writing	
Working distance for reading	0-11
Offset at distance	
0	±6
3	±6
7	±4
8	±4
10	±2

Dimensions in mm

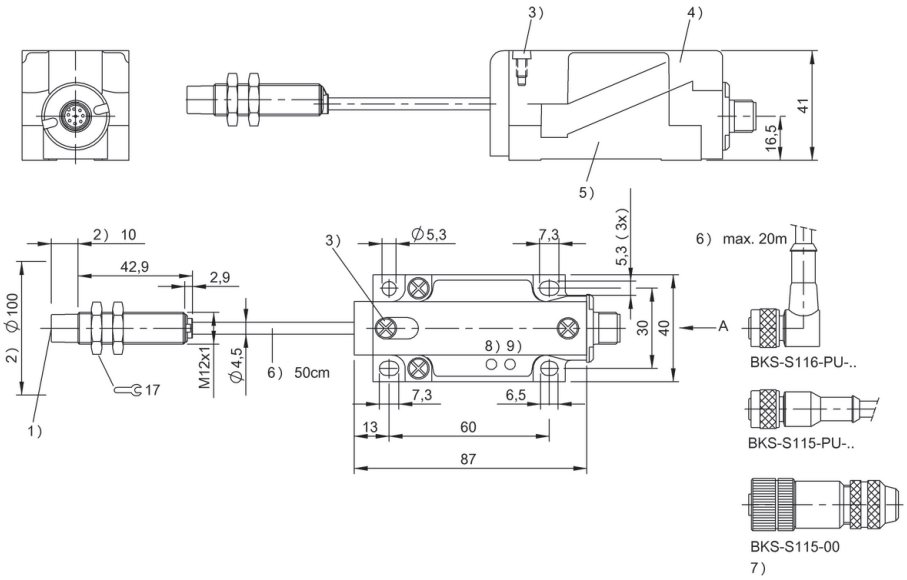

1) Sensing surface, 2) Clear zone, 3) Locking screw, 4) Module unit, 5) Mounting base, 6) Cable length, 7) no cable, 8) Power, 9) Tag present

	BIS00CC BIS L-400-035-004-00-S115
Product Group	LF (125 kHz)
Dimension	25 x 10 x 50 mm
Installation	metal-free (clear zone)
Antenna type	round
Connection	Connector, M12x1 connector, 8-pin, 0.50 m, PU
Housing material	ABS, interface PBT
Interface	RS232
Operating voltage Ub	19.2...26.4 VDC
Ambient temperature	0...70 °C
Protection degree	IP67
Approval/Conformity	CE, UL-FILE E227256, Vol.X1, BIS

Appropriate data carrier

	BIS003R BIS0035		BIS003T BIS0038		BIS003W BIS003F	
Data carrier distance to metal	metal-free		metal-free		metal-free	
Data carrier clear zone						
Working distance for writing						
Working distance for reading	0-23		0-27		0-16	
Offset at distance						
0	±12		±15		±8	
3	±12		±15		±8	
7	±12		±15		±8	
8	±12		±15		±8	
10	±12		±15		±8	
12	±12		±15		±4	
15	±12		±15		±4	
18	±8		±15			
20	±8		±15			
25			±6			

Dimensions in mm

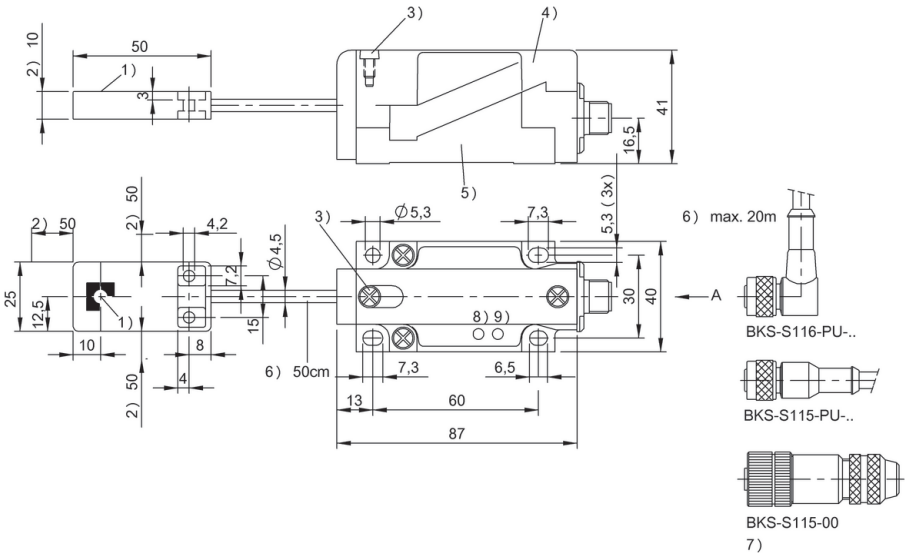

1) Sensing surface, 2) Clear zone, 3) Locking screw, 4) Module unit, 5) Mounting base, 6) Cable length, 7) no cable, 8) Power, 9) Tag present

Do you need more details? Our Product Finder at www.balluff.com provides you with product-specific information, including technical drawings, data sheets, user guides and more for each individual product. All items are available for download.

	BIS00C6 BIS L-400-035-001-02-S115
Product Group	LF (125 kHz)
Dimension	40 x 41 x 120 mm
Installation	metal-free (clear zone)
Antenna type	round
Connection	Connector, M12x1 connector, 8-pin
Housing material	PBT
Interface	RS422
Operating voltage Ub	19.2...26.4 VDC
Ambient temperature	0...70 °C
Protection degree	IP67
Approval/Conformity	CE, UL-FILE E227256, Vol.X1, BIS

Appropriate data carrier

	BIS003R BIS0035			BIS003T BIS0038			BIS003U BIS003C			BIS003W BIS003F	
Data carrier distance to metal	metal-free	on metal	flush in metal	metal-free	on metal	flush in metal	metal-free	on metal	flush in metal	metal-free	
Data carrier clear zone											
Working distance for writing											
Working distance for reading	0-30	0-15	5-12	0-40	0-24	0-18	0-55	0-32	0-28	0-20	
Offset at distance											
0	±15	±10		±20	±12	±10	±30	±20	±18	±10	
3	±15	±10		±20	±12	±10	±30	±20	±18	±10	
5	±15	±10	±10	±20	±12	±10	±30	±20	±18	±10	
8	±15	±10	±7	±20	±12	±10	±30	±20	±18	±10	
10	±15	±10	±7	±20	±12	±10	±30	±20	±18	±10	
12	±15	±8	±7	±20	±12	±10	±30	±20	±18	±10	
15	±15	±8		±20	±12	±10	±30	±20	±18	±10	
18	±15			±20	±12	±10	±30	±20	±14		
20	±15			±20	±12		±30	±20	±14		
24	±15			±20	±10		±30	±20	±12		
28				±20			±30	±14	±12		
30				±20			±30	±14			
32				±20			±30	±14			
35				±20			±30				
40							±30				

Dimensions in mm

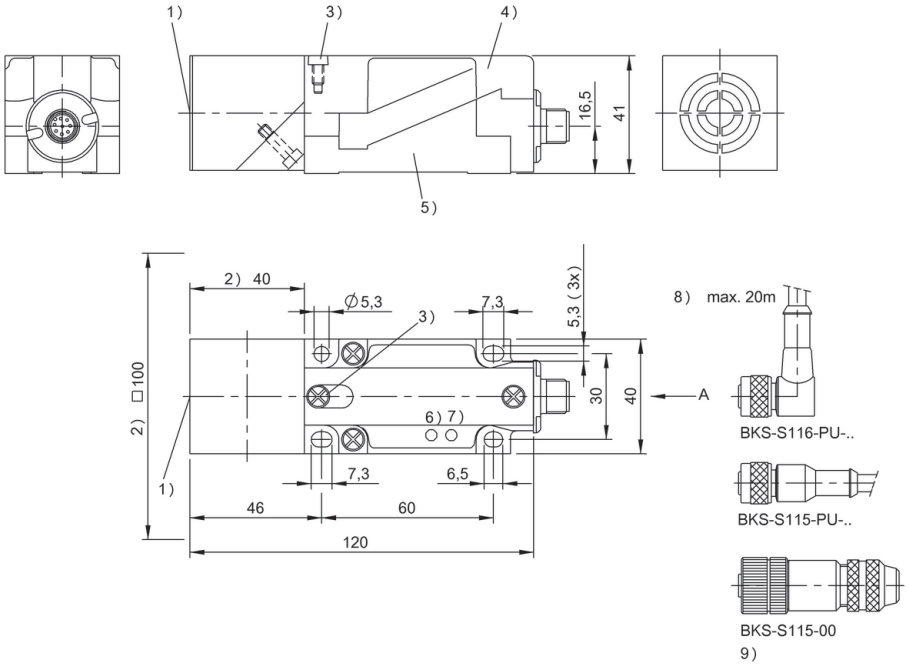

1) Sensing surface, 2) Clear zone, 3) Locking screw, 4) Module unit, 5) Mounting base, 6) Power, 7) Tag present, 8) Cable length, 9) no cable

IO-Link, 10 Bytes process data length	**BIS00CZ** BIS L-409-045-001-07-S4
Product Group	LF (125 kHz)
Dimension	40 x 41 x 120 mm
Installation	metal-free (clear zone)
Antenna type	round
Connection	Connector, M12x1 connector, 4-pin
Housing material	PBT
Interface	IO-Link
Operating voltage Ub	18...30 VDC
Ambient temperature	0...70 °C
Protection degree	IP67
Approval/Conformity	CE, UL-FILE E227256, Vol.X1, BIS

Nur mit **IO-Link-Master** verwenden

Appropriate data carrier

	BIS003R BIS0035			**BIS003T BIS0038**			**BIS003U BIS003C**			**BIS003W BIS003F**	
Data carrier distance to metal	metal-free	on metal	flush in metal	metal-free	on metal	flush in metal	metal-free	on metal	flush in metal	metal-free	
Data carrier clear zone											
Working distance for writing											
Working distance for reading	0-30	0-15	5-12	0-40	0-24	0-18	0-55	0-32	0-28	0-20	
Offset at distance											
0	±15	±10		±20	±12	±10	±30	±20	±18	±10	
3	±15	±10		±20	±12	±10	±30	±20	±18	±10	
5	±15	±10	±10	±20	±12	±10	±30	±20	±18	±10	
8	±15	±10	±7	±20	±12	±10	±30	±20	±18	±10	
10	±15	±10	±7	±20	±12	±10	±30	±20	±18	±10	
12	±15	±8	±7	±20	±12	±10	±30	±20	±18	±10	
15	±15	±8		±20	±12	±10	±30	±20	±18	±10	
18	±15			±20	±12	±10	±30	±20	±14		
20	±15			±20	±12		±30	±20	±14		
24	±15			±20	±10		±30	±20	±12		
28				±20			±30	±14	±12		
30				±20			±30	±14			
32				±20			±30	±14			
35				±20			±30				
40							±30				

Dimensions in mm

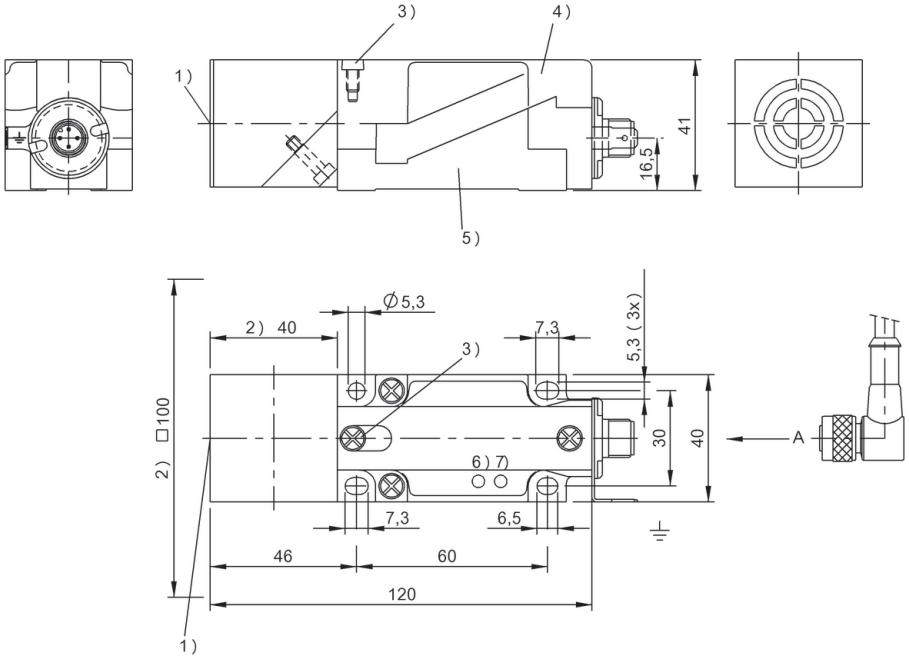

1) Sensing surface, 2) Clear zone, 3) Locking screw, 4) Module unit, 5) Mounting base, 6) Power, 7) Tag present

Do you need more details? Our Product Finder at www.balluff.com provides you with product-specific information, including technical drawings, data sheets, user guides and more for each individual product. All items are available for download.

IO-Link, 10 Bytes process data length	**BIS00E0** BIS L-409-045-002-07-S4
Product Group	LF (125 kHz)
Dimension	Ø 18 x 75 mm
Installation	metal-free (clear zone)
Antenna type	round
Connection	Connector, M12x1 connector, 4-pin, 0.50 m, PU
Housing material	Brass, interface PBT
Interface	IO-Link
Operating voltage Ub	18...30 VDC
Ambient temperature	0...70 °C
Protection degree	IP67
Approval/Conformity	CE, UL-FILE E227256, Vol.X1, BIS

Use with **IO-Link master** only

Appropriate data carrier

	BIS003R BIS0035		BIS003T BIS0038		BIS003W BIS003F	
Data carrier distance to metal	metal-free		metal-free		metal-free	
Data carrier clear zone						
Working distance for writing						
Working distance for reading	0-23		0-27		0-16	
Offset at distance						
0	±12		±15		±8	
3	±12		±15		±8	
7	±12		±15		±8	
8	±12		±15		±8	
10	±12		±15		±8	
12	±12		±15		±4	
15	±12		±15		±4	
18			±15			
20			±15			
25			±6			

Dimensions in mm

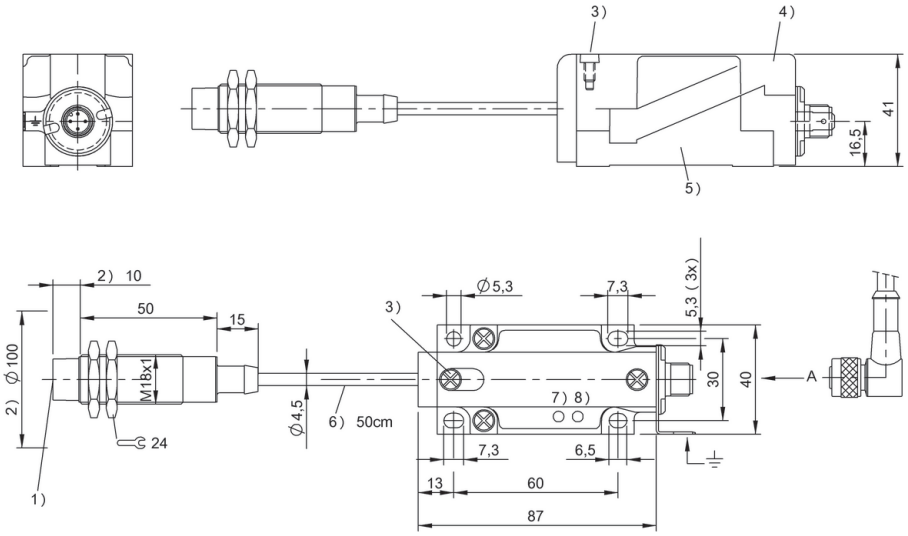

1) Sensing surface, 2) Clear zone, 3) Locking screw, 4) Module unit, 5) Mounting base, 6) Cable length, 7) Power, 8) Tag present

Do you need more details? Our Product Finder at www.balluff.com provides you with product-specific information, including technical drawings, data sheets, user guides and more for each individual product. All items are available for download.

IO-Link, 10 Bytes process data length	**BIS00E1** BIS L-409-045-003-07-S4
Product Group	LF (125 kHz)
Dimension	Ø 12 x 53 mm
Installation	metal-free (clear zone)
Antenna type	round
Connection	Connector, M12x1 connector, 4-pin, 0.50 m, PU
Housing material	Brass, interface PBT
Interface	IO-Link
Operating voltage Ub	18...30 VDC
Ambient temperature	0...70 °C
Protection degree	IP67
Approval/Conformity	CE, UL-FILE E227256, Vol.X1, BIS

Use with **IO-Link master** only

Appropriate data carrier

	BIS003W **BIS003F**	
Data carrier distance to metal	metal-free	
Data carrier clear zone		
Working distance for writing		
Working distance for reading	0-11	
Offset at distance		
0	±6	
3	±6	
7	±4	
8	±4	
10	±2	

Dimensions in mm

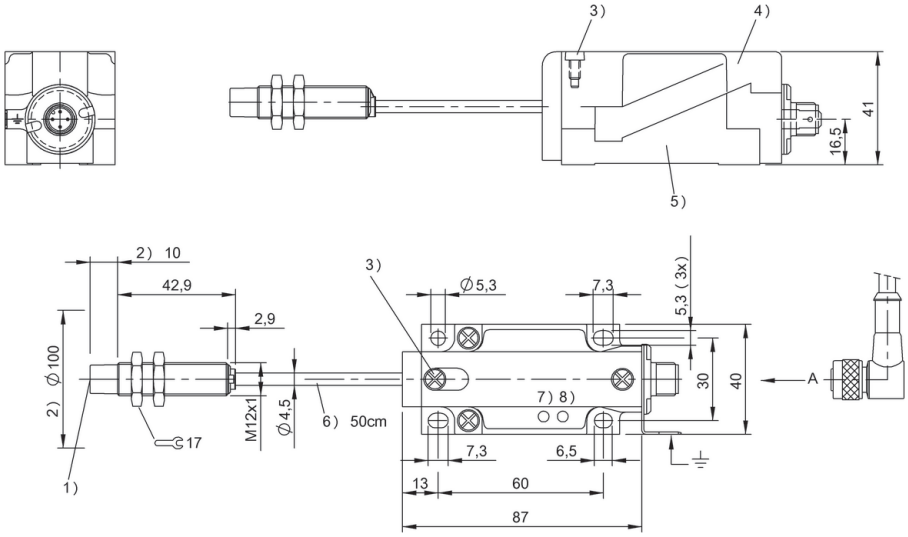

1) Sensing surface, 2) Clear zone, 3) Locking screw, 4) Module unit, 5) Mounting base, 6) Cable length, 7) Power, 8) Tag present

IO-Link, 10 Bytes process data length	**BIS00E2** BIS L-409-045-004-07-S4
Product Group	LF (125 kHz)
Dimension	25 x 10 x 50 mm
Installation	metal-free (clear zone)
Antenna type	round
Connection	Connector, M12x1 connector, 4-pin, 0.50 m, PU
Housing material	ABS, interface PBT
Interface	IO-Link
Operating voltage Ub	18...30 VDC
Ambient temperature	0...70 °C
Protection degree	IP67
Approval/Conformity	CE, UL-FILE E227256, Vol.X1, BIS

Use with **IO-Link master** only

Appropriate data carrier

	BIS003R BIS0035		BIS003T BIS0038		BIS003W BIS003F	
Data carrier distance to metal	metal-free		metal-free		metal-free	
Data carrier clear zone						
Working distance for writing						
Working distance for reading	0-23		0-27		0-16	
Offset at distance						
0	±12		±15		±8	
3	±12		±15		±8	
7	±12		±15		±8	
8	±12		±15		±8	
10	±12		±15		±8	
12	±12		±15		±4	
15	±12		±15		±4	
18	±8		±15			
20	±8		±15			
25			±6			

Dimensions in mm

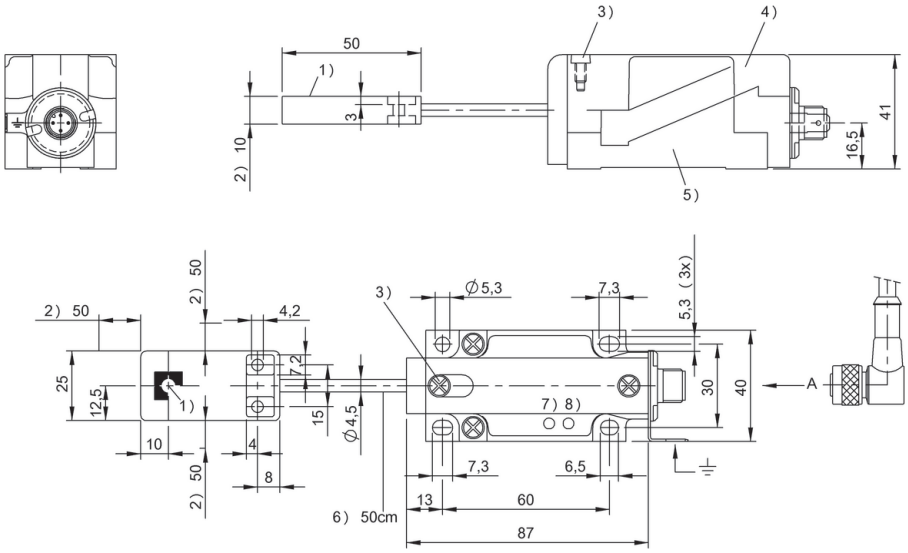

1) Sensing surface, 2) Clear zone, 3) Locking screw, 4) Module unit, 5) Mounting base, 6) Cable length, 7) Power, 8) Tag present

	BIS00CM BIS L-405-033-001-05-MU
Product Group	LF (125 kHz)
Dimension	40 x 41 x 120 mm
Installation	metal-free (clear zone)
Antenna type	round
Connection	—
Housing material	PBT
Interface	parallel
Operating voltage Ub	19.2...26.4 VDC
Ambient temperature	0...70 °C
Protection degree	IP67
Approval/Conformity	CE, UL-FILE E227256, Vol.X1, BIS

Use with **IO-Link master** only

Appropriate data carrier

	BIS003R BIS0035			BIS003T BIS0038			BIS003U BIS003C			BIS003W BIS003F	
Data carrier distance to metal	metal-free	on metal	flush in metal	metal-free	on metal	flush in metal	metal-free	on metal	flush in metal	metal-free	
Data carrier clear zone											
Working distance for writing											
Working distance for reading	0-30	0-15	5-12	0-40	0-24	0-18	0-55	0-32	0-28	0-20	
Offset at distance											
0	±15	±10		±20	±12	±10	±30	±20	±18	±10	
3	±15	±10		±20	±12	±10	±30	±20	±18	±10	
5	±15	±10	±10	±20	±12	±10	±30	±20	±18	±10	
8	±15	±10	±7	±20	±12	±10	±30	±20	±18	±10	
10	±15	±10	±7	±20	±12	±10	±30	±20	±18	±10	
12	±15	±8	±7	±20	±12	±10	±30	±20	±18	±10	
15	±15	±8		±20	±12	±10	±30	±20	±18	±10	
18	±15			±20	±12	±10	±30	±20	±14		
20	±15			±20	±12		±30	±20	±14		
24	±15			±20	±10		±30	±20	±12		
28				±20			±30	±14	±12		
30				±20			±30	±14			
32				±20			±30	±14			
35				±20			±30				
40							±30				

Dimensions in mm

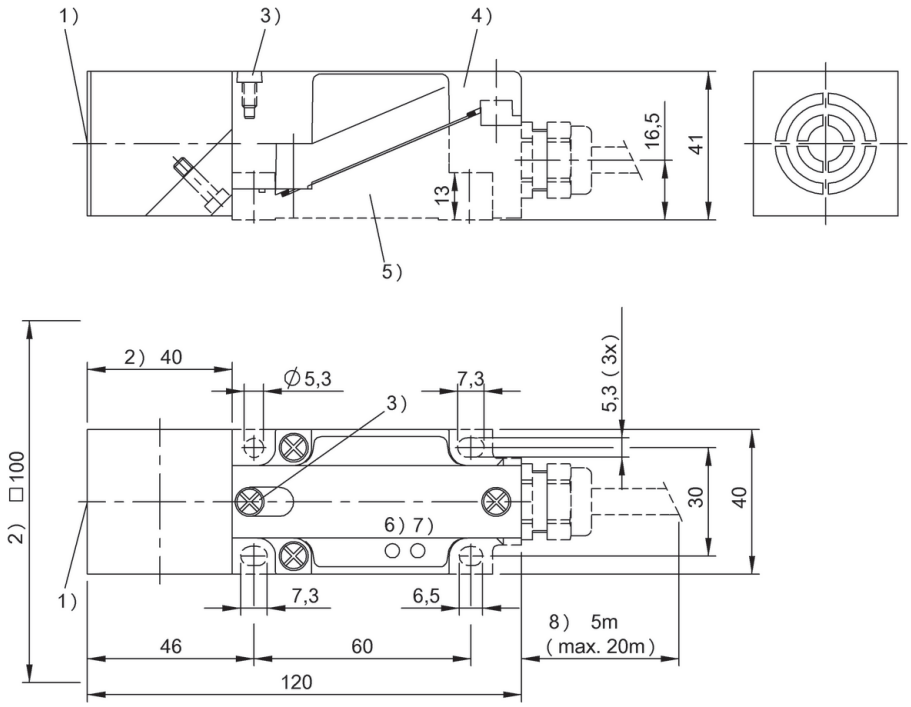

1) Sensing surface, 2) Clear zone, 3) Locking screw, 4) Module unit, 5) Mounting base, 6) Power, 7) Tag present, 8) standard length

	BIS00CT BIS L-405-037-001-05-MU
Product Group	LF (125 kHz)
Dimension	40 x 41 x 120 mm
Installation	metal-free (clear zone)
Antenna type	round
Connection	—
Housing material	PBT
Interface	parallel
Operating voltage Ub	19.2...26.4 VDC
Ambient temperature	0...70 °C
Protection degree	IP67
Approval/Conformity	CE, UL-FILE E227256, Vol.X1, BIS

Appropriate data carrier

	BIS003R BIS0035			BIS003T BIS0038			BIS003U BIS003C			BIS003W BIS003F	
Data carrier distance to metal	metal-free	on metal	flush in metal	metal-free	on metal	flush in metal	metal-free	on metal	flush in metal	metal-free	
Data carrier clear zone											
Working distance for writing											
Working distance for reading	0-30	0-15	5-12	0-40	0-24	0-18	0-55	0-32	0-28	0-20	
Offset at distance											
0	±15	±10		±20	±12	±10	±30	±20	±18	±10	
3	±15	±10		±20	±12	±10	±30	±20	±18	±10	
5	±15	±10	±10	±20	±12	±10	±30	±20	±18	±10	
8	±15	±10	±7	±20	±12	±10	±30	±20	±18	±10	
10	±15	±10	±7	±20	±12	±10	±30	±20	±18	±10	
12	±15	±8	±7	±20	±12	±10	±30	±20	±18	±10	
15	±15	±8		±20	±12	±10	±30	±20	±18	±10	
18	±15			±20	±12	±10	±30	±20	±14		
20	±15			±20	±12		±30	±20	±14		
24	±15			±20	±10		±30	±20	±12		
28				±20			±30	±14	±12		
30				±20			±30	±14			
32				±20			±30	±14			
35				±20			±30				
40							±30				

Dimensions in mm

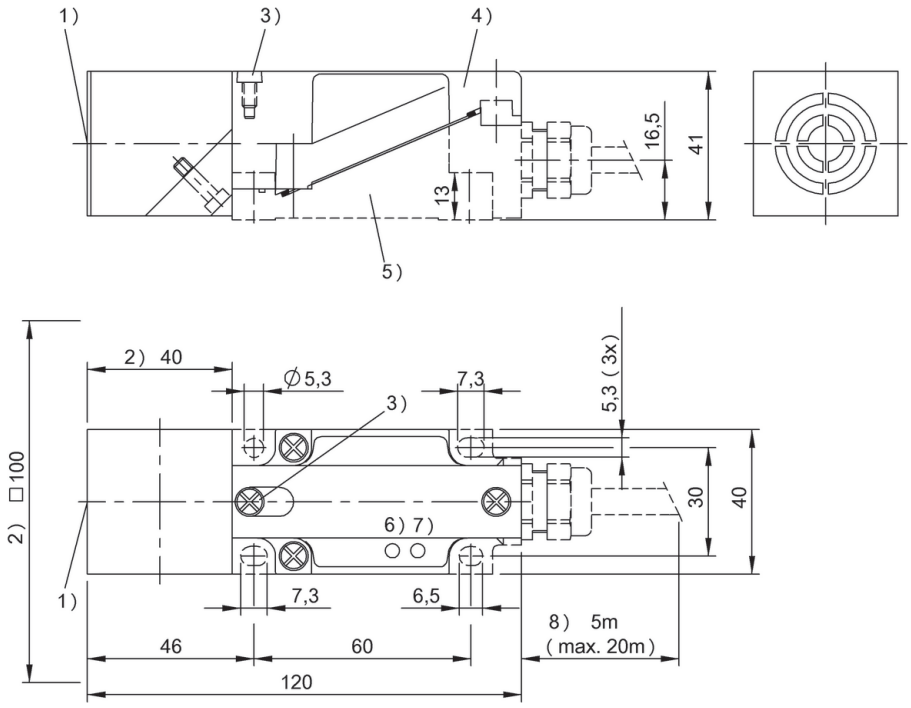

1) Sensing surface, 2) Clear zone, 3) Locking screw, 4) Module unit, 5) Mounting base, 6) Power, 7) Tag present, 8) standard length

Do you need more details? Our Product Finder at www.balluff.com provides you with product-specific information, including technical drawings, data sheets, user guides and more for each individual product. All items are available for download.

	BCC00R2 BIS L-503-PU1-05
Product Group	LF (125 kHz)
Dimension	—
Installation	—
Antenna type	—
Connection	Cable with connector housing, 5.00 m, PU
Housing material	PBT
Interface	parallel
Operating voltage Ub	—
Ambient temperature	—
Protection degree	IP65
Approval/Conformity	CE

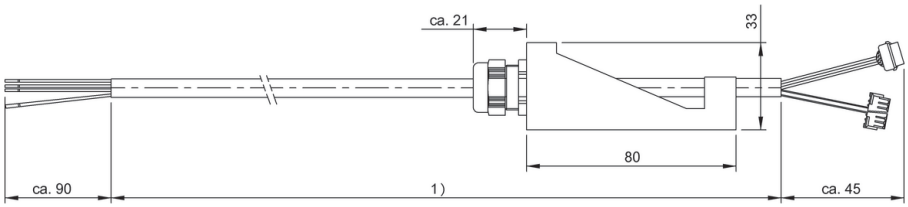

1) Cable length see text

	BCC00R3 BIS L-503-PU1-10
Produktgruppe	LF (125 kHz)
Abmessung	—
Einbau	—
Antennenform	—
Anschluss	Cable with connector housing, 10.00 m, PU
Gehäusematerial	PBT
Schnittstelle	parallel
Betriebsspannung Ub	—
Umgebungstemperatur	—
Schutzart	IP67
Zulassung/Konformität	CE

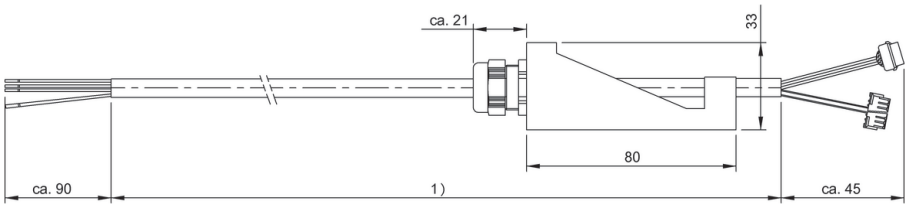

1) Cable length see text

	BCC00R4 BIS L-503-PU1-15
Product Group	LF (125 kHz)
Dimension	—
Installation	—
Antenna type	—
Connection	Cable with connector housing, 15.00 m, PU
Housing material	PBT
Interface	parallel
Operating voltage Ub	—
Ambient temperature	—
Protection degree	IP65
Approval/Conformity	CE

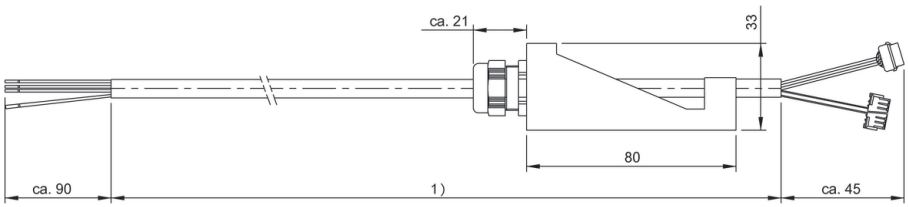

1) Cable length see text

	BIS00CN BIS L-405-033-002-05-MU
Product Group	LF (125 kHz)
Dimension	Ø 18 x 75 mm
Installation	metal-free (clear zone)
Antenna type	round
Connection	0.50 m, PU
Housing material	Brass, interface PBT
Interface	parallel
Operating voltage Ub	19.2...26.4 VDC
Ambient temperature	0...70 °C
Protection degree	IP67
Approval/Conformity	CE, UL-FILE E227256, Vol.X1, BIS

Appropriate data carrier

	BIS003R BIS0035		BIS003T BIS0038		BIS003W BIS003F	
Data carrier distance to metal	metal-free		metal-free		metal-free	
Data carrier clear zone						
Working distance for writing						
Working distance for reading	0-23		0-27		0-16	
Offset at distance						
0	±12		±15		±8	
3	±12		±15		±8	
7	±12		±15		±8	
8	±12		±15		±8	
10	±12		±15		±8	
12	±12		±15		±4	
15	±12		±15		±4	
18			±15			
20			±15			
25			±6			

Dimensions in mm

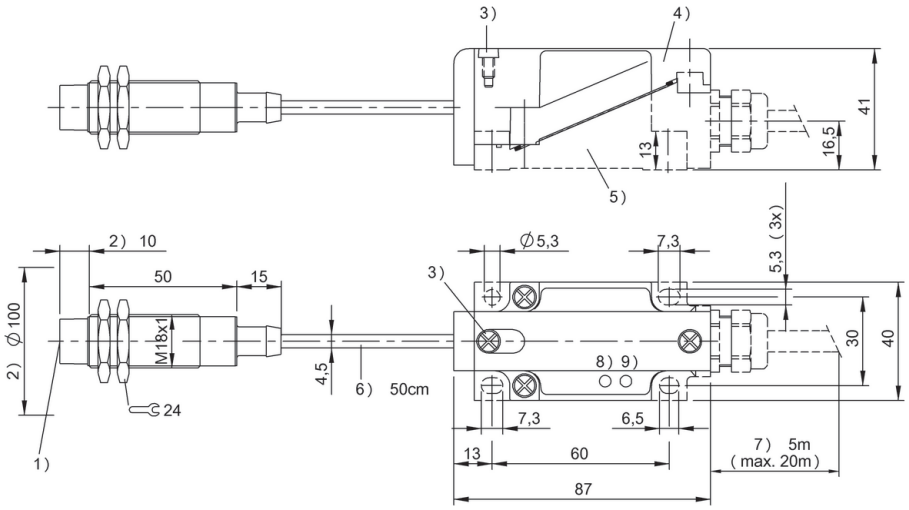

1) Sensing surface, 2) Clear zone, 3) Locking screw, 4) Module unit, 5) Mounting base, 6) Cable length, 7) standard length, 8) Power, 9) Tag present

Do you need more details? Our Product Finder at www.balluff.com provides you with product-specific information, including technical drawings, data sheets, user guides and more for each individual product. All items are available for download.

	BIS00CP BIS L-405-033-003-05-MU
Product Group	LF (125 kHz)
Dimension	Ø 12 x 53 mm
Installation	metal-free (clear zone)
Antenna type	round
Connection	0.50 m, PU
Housing material	Brass, interface PBT
Interface	parallel
Operating voltage Ub	19.2...26.4 VDC
Ambient temperature	0...70 °C
Protection degree	IP67
Approval/Conformity	CE, UL-FILE E227256, Vol.X1, BIS

Appropriate data carrier

	BIS003W BIS003F
Data carrier distance to metal	metal-free
Data carrier clear zone	
Working distance for writing	
Working distance for reading	0-11
Offset at distance	
0	±6
3	±6
7	±4
8	±4
10	±2

Dimensions in mm

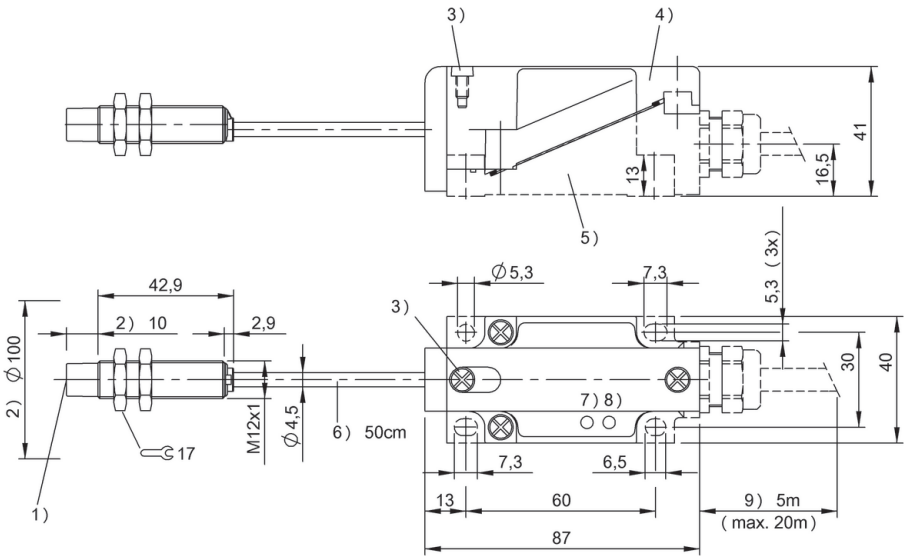

1) Sensing surface, 2) Clear zone, 3) Locking screw, 4) Module unit, 5) Mounting base, 6) Cable length, 7) standard length, 8) Power, 9) Tag present

Do you need more details? Our Product Finder at www.balluff.com provides you with product-specific information, including technical drawings, data sheets, user guides and more for each individual product. All items are available for download.

	BIS00CR BIS L-405-033-004-05-MU
Product Group	LF (125 kHz)
Dimension	25 x 10 x 50 mm
Installation	metal-free (clear zone)
Antenna type	round
Connection	0.50 m, PU
Housing material	ABS, interface PBT
Interface	parallel
Operating voltage Ub	19.2...26.4 VDC
Ambient temperature	0...70 °C
Protection degree	IP67
Approval/Conformity	CE, UL-FILE E227256, Vol.X1, BIS

Appropriate data carrier

	BIS003R BIS0035		BIS003T BIS0038		BIS003W BIS003F	
Data carrier distance to metal	metal-free		metal-free		metal-free	
Data carrier clear zone						
Working distance for writing						
Working distance for reading	0-23		0-27		0-16	
Offset at distance						
0	±12		±15		±8	
3	±12		±15		±8	
7	±12		±15		±8	
8	±12		±15		±8	
10	±12		±15		±8	
12	±12		±15		±4	
15	±12		±15		±4	
18	±8		±15			
20	±8		±15			
25			±6			

Dimensions in mm

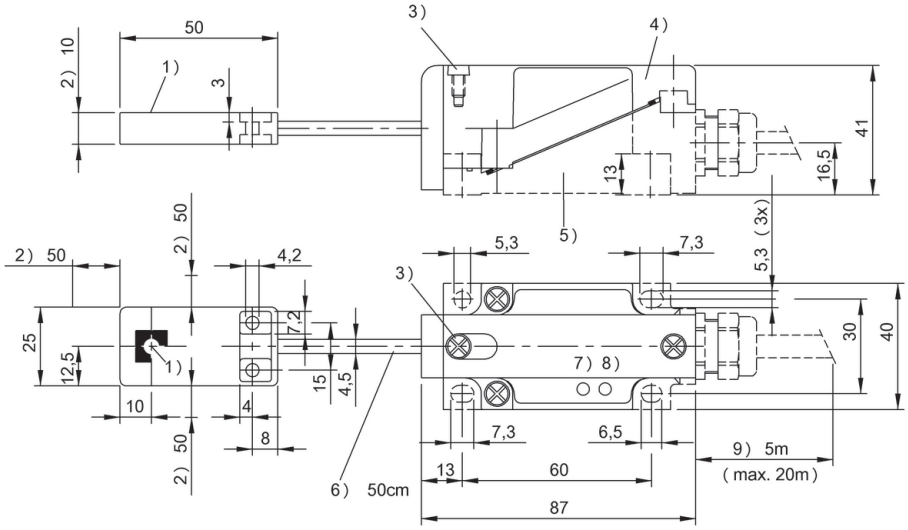

1) Sensing surface, 2) Clear zone, 3) Locking screw, 4) Module unit, 5) Mounting base, 6) Cable length, 7) Power, 8) Tag present, 9) standard length

Do you need more details? Our Product Finder at www.balluff.com provides you with product-specific information, including technical drawings, data sheets, user guides and more for each individual product. All items are available for download.

	BIS00CU BIS L-405-037-002-05-MU
Product Group	LF (125 kHz)
Dimension	Ø 18 x 75 mm
Installation	metal-free (clear zone)
Antenna type	round
Connection	0.50 m, PU
Housing material	Brass, interface PBT
Interface	parallel
Operating voltage Ub	19.2...26.4 VDC
Ambient temperature	0...70 °C
Protection degree	IP67
Approval/Conformity	CE, UL-FILE E227256, Vol.X1, BIS

Appropriate data carrier

	BIS003R BIS0035		BIS003T BIS0038		BIS003W BIS003F	
Data carrier distance to metal	metal-free		metal-free		metal-free	
Data carrier clear zone						
Working distance for writing						
Working distance for reading	0-23		0-27		0-16	
Offset at distance						
0	±12		±15		±8	
3	±12		±15		±8	
7	±12		±15		±8	
8	±12		±15		±8	
10	±12		±15		±8	
12	±12		±15		±4	
15	±12		±15		±4	
18			±15			
20			±15			
25			±6			

Dimensions in mm

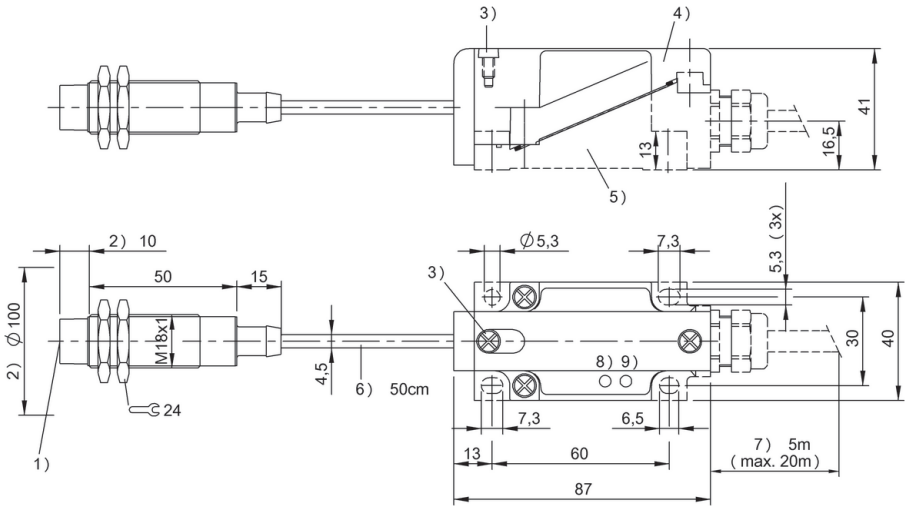

1) Sensing surface, 2) Clear zone, 3) Locking screw, 4) Module unit, 5) Mounting base, 6) Cable length, 7) standard length, 8) Power, 9) Tag present

	BIS00CW BIS L-405-037-003-05-MU
Product Group	LF (125 kHz)
Dimension	Ø 12 x 53 mm
Installation	metal-free (clear zone)
Antenna type	round
Connection	0.50 m, PU
Housing material	Brass, interface PBT
Interface	parallel
Operating voltage Ub	19.2...26.4 VDC
Ambient temperature	0...70 °C
Protection degree	IP67
Approval/Conformity	CE, UL-FILE E227256, Vol.X1, BIS

Appropriate data carrier

	BIS003W BIS003F
Data carrier distance to metal	metal-free
Data carrier clear zone	
Working distance for writing	
Working distance for reading	0-11
Offset at distance	
0	±6
3	±6
7	±4
8	±4
10	±2

Dimensions in mm

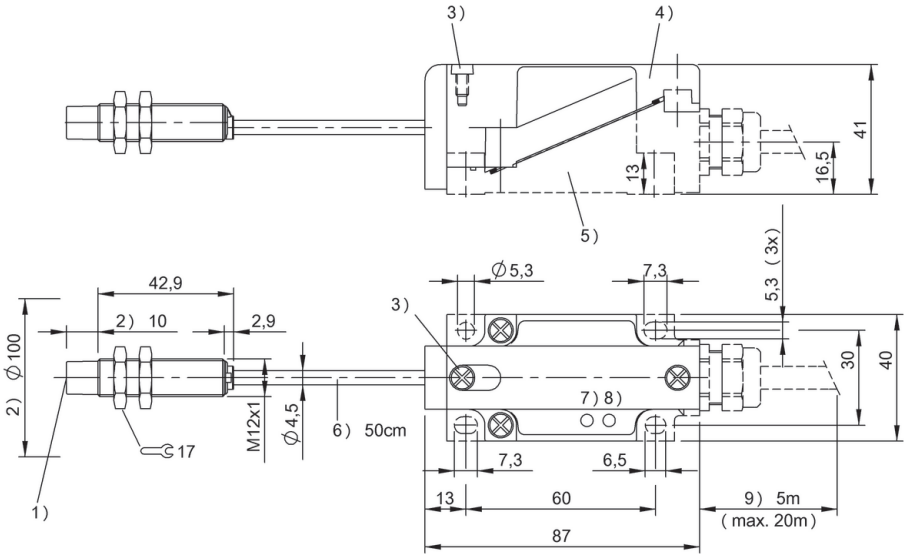

1) Sensing surface, 2) Clear zone, 3) Locking screw, 4) Module unit, 5) Mounting base, 6) Cable length, 7) Power, 8) Tag present, 9) standard length

Do you need more details? Our Product Finder at www.balluff.com provides you with product-specific information, including technical drawings, data sheets, user guides and more for each individual product. All items are available for download.

For processor units BAE003W and BAE003U (Easy Loop)	**BIS00CH** BIS L-400-043-001-02-S115
Product Group	LF (125 kHz)
Dimension	40 x 41 x 120 mm
Installation	metal-free (clear zone)
Antenna type	round
Connection	Connector, M12x1 connector, 8-pin
Housing material	PBT
Interface	RS422 (Easy Loop)
Operating voltage Ub	19.2...26.4 VDC
Ambient temperature	0...70 °C
Protection degree	IP67
Approval/Conformity	CE, UL-FILE E227256, Vol.X1, BIS

Appropriate data carrier

	BIS003R BIS0035			**BIS003T BIS0038**			**BIS003U BIS003C**			**BIS003W BIS003F**	
Data carrier distance to metal	metal-free	on metal	flush in metal	metal-free	on metal	flush in metal	metal-free	on metal	flush in metal	metal-free	
Data carrier clear zone											
Working distance for writing											
Working distance for reading	0-30	0-15	5-12	0-40	0-24	0-18	0-55	0-32	0-28	0-20	
Offset at distance											
0	±15	±10		±20	±12	±10	±30	±20	±18	±10	
3	±15	±10		±20	±12	±10	±30	±20	±18	±10	
5	±15	±10	±10	±20	±12	±10	±30	±20	±18	±10	
8	±15	±10	±7	±20	±12	±10	±30	±20	±18	±10	
10	±15	±10	±7	±20	±12	±10	±30	±20	±18	±10	
12	±15	±8	±7	±20	±12	±10	±30	±20	±18	±10	
15	±15	±8		±20	±12	±10	±30	±20	±18	±10	
18	±15			±20	±12	±10	±30	±20	±14		
20	±15			±20	±12		±30	±20	±14		
24	±15			±20	±10		±30	±20	±12		
28				±20			±30	±14	±12		
30				±20			±30	±14			
32				±20			±30	±14			
35				±20			±30				
40							±30				

Dimensions in mm

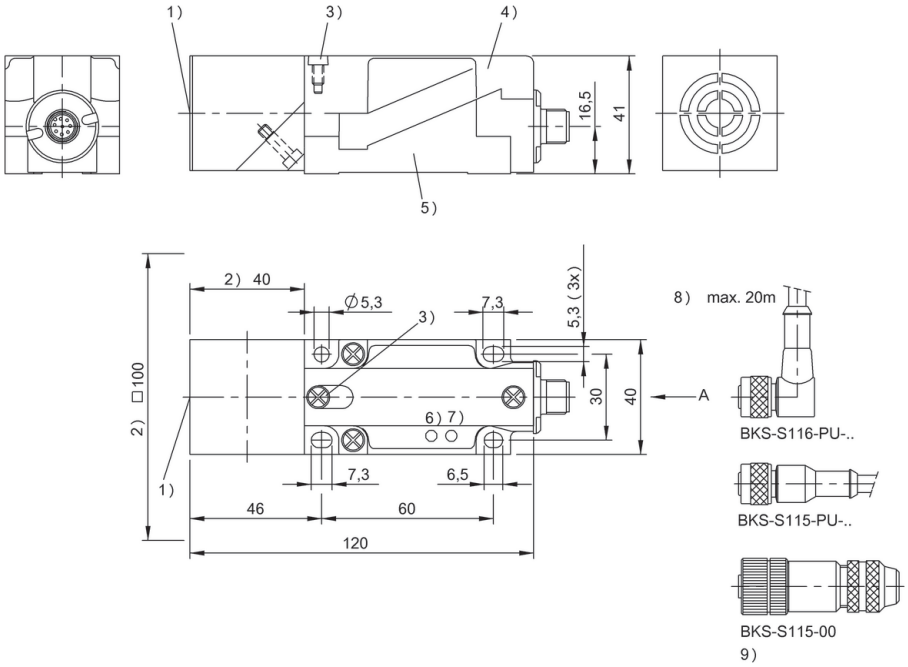

1) Sensing surface, 2) Clear zone, 3) Locking screw, 4) Module unit, 5) Mounting base, 6) Power, 7) Tag present, 8) Cable length, 9) no cable

Do you need more details? Our Product Finder at www.balluff.com provides you with product-specific information, including technical drawings, data sheets, user guides and more for each individual product. All items are available for download.

For processor units BAE003W and BAE003U (Easy Loop)	**BIS00CJ** BIS L-400-043-002-02-S115
Product Group	LF (125 kHz)
Dimension	Ø 18 x 75 mm
Installation	metal-free (clear zone)
Antenna type	round
Connection	Connector, M12x1 connector, 8-pin, 0.50 m, PU
Housing material	Brass, interface PBT
Interface	RS422 (Easy Loop)
Operating voltage Ub	19.2...26.4 VDC
Ambient temperature	0...70 °C
Protection degree	IP67
Approval/Conformity	CE, UL-FILE E227256, Vol.X1, BIS

Appropriate data carrier

	BIS003R BIS0035		**BIS003T BIS0038**		**BIS003W BIS003F**	
Data carrier distance to metal	metal-free		metal-free		metal-free	
Data carrier clear zone						
Working distance for writing						
Working distance for reading	0-23		0-27		0-16	
Offset at distance						
0	±12		±15		±8	
3	±12		±15		±8	
7	±12		±15		±8	
8	±12		±15		±8	
10	±12		±15		±8	
12	±12		±15		±4	
15	±12		±15		±4	
18			±15			
20			±15			
25			±6			

Dimensions in mm

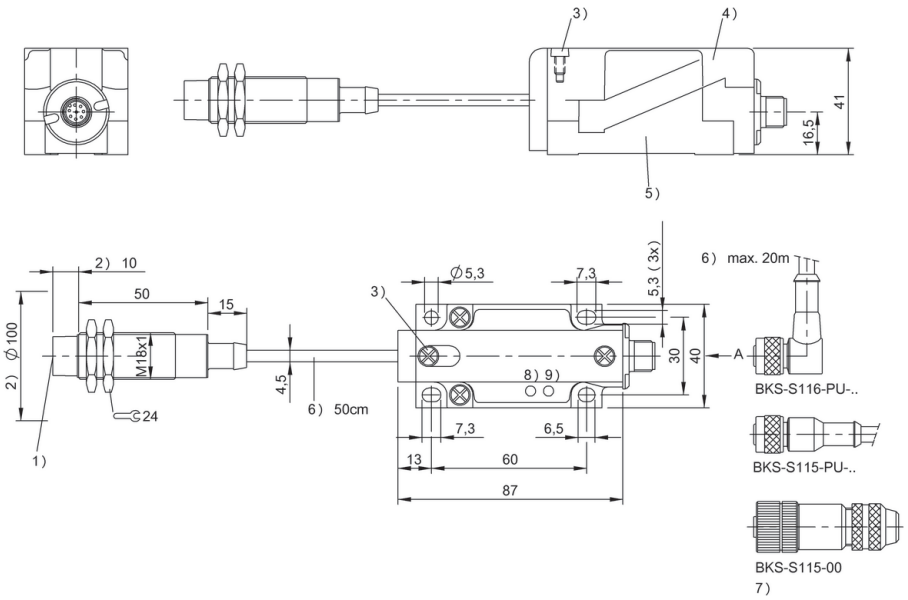

1) Sensing surface, 2) Clear zone, 3) Locking screw, 4) Module unit, 5) Mounting base, 6) Cable length, 7) no cable, 8) Power, 9) Tag present

Do you need more details? Our Product Finder at www.balluff.com provides you with product-specific information, including technical drawings, data sheets, user guides and more for each individual product. All items are available for download.

For processor units BAE003W and BAE003U (Easy Loop)	**BIS00CK** BIS L-400-043-003-02-S115
Product Group	LF (125 kHz)
Dimension	Ø 12 x 53 mm
Installation	metal-free (clear zone)
Antenna type	round
Connection	Connector, M12x1 connector, 8-pin, 0.50 m, PU
Housing material	Brass, interface PBT
Interface	RS422 (Easy Loop)
Operating voltage Ub	19.2...26.4 VDC
Ambient temperature	0...70 °C
Protection degree	IP67
Approval/Conformity	CE, UL-FILE E227256, Vol.X1, BIS

Appropriate data carrier

	BIS003W **BIS003F**	
Data carrier distance to metal	metal-free	
Data carrier clear zone		
Working distance for writing		
Working distance for reading	0-11	
Offset at distance		
0	±6	
3	±6	
7	±4	
8	±4	
10	±2	

Dimensions in mm

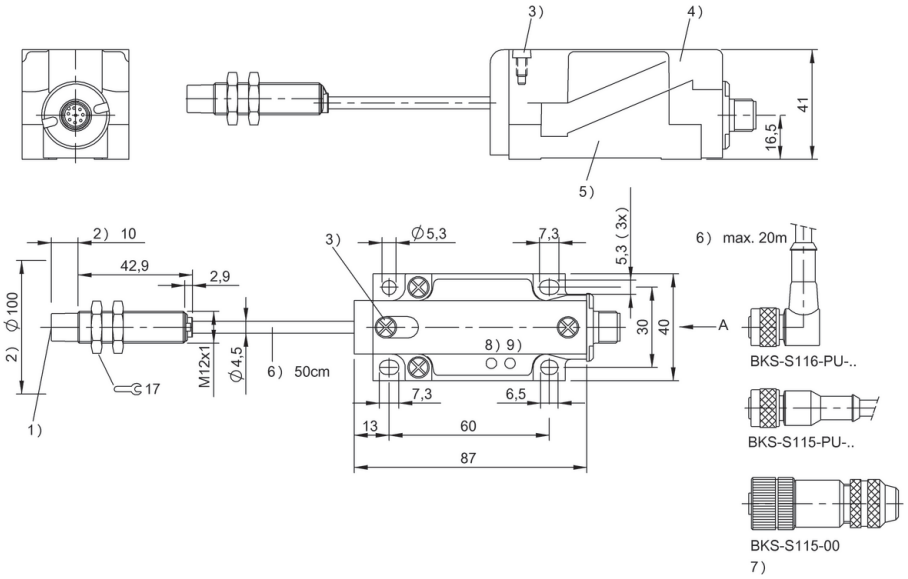

1) Sensing surface, 2) Clear zone, 3) Locking screw, 4) Module unit, 5) Mounting base, 6) Cable length, 7) no cable, 8) Power, 9) Tag present

Do you need more details? Our Product Finder at www.balluff.com provides you with product-specific information, including technical drawings, data sheets, user guides and more for each individual product. All items are available for download.

For processor units BAE003W and BAE003U (Easy Loop)	**BIS00CL** BIS L-400-043-004-02-S115
Product Group	LF (125 kHz)
Dimension	25 x 10 x 50 mm
Installation	metal-free (clear zone)
Antenna type	round
Connection	Connector, M12x1 connector, 8-pin, 0.50 m, PU
Housing material	ABS, interface PBT
Interface	RS422 (Easy Loop)
Operating voltage Ub	19.2...26.4 VDC
Ambient temperature	0...70 °C
Protection degree	IP67
Approval/Conformity	CE, UL-FILE E227256, Vol.X1, BIS

Appropriate data carrier

	BIS003R BIS0035		**BIS003T BIS0038**		**BIS003W BIS003F**	
Data carrier distance to metal	metal-free		metal-free		metal-free	
Data carrier clear zone						
Working distance for writing						
Working distance for reading	0-23		0-27		0-16	
Offset at distance						
0	±12		±15		±8	
3	±12		±15		±8	
7	±12		±15		±8	
8	±12		±15		±8	
10	±12		±15		±8	
12	±12		±15		±4	
15	±12		±15		±4	
18	±8		±15			
20	±8		±15			
25			±6			

Dimensions in mm

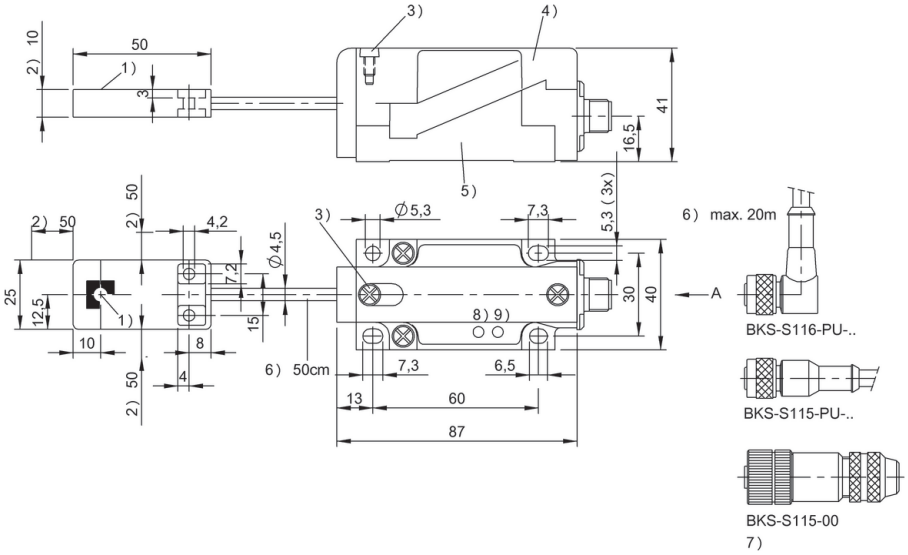

1) Sensing surface, 2) Clear zone, 3) Locking screw, 4) Module unit, 5) Mounting base, 6) Cable length, 7) no cable, 8) Power, 9) Tag present

BALLUFF
BALLUFF
BALLUFF

LF HANDHELD DEVICES (125 KHZ)

Do you need more details?
Our Product Finder at **www.balluff.com**
provides you with product-specific information,

including technical drawings, data sheets, user guides and more for each individual product.
All items are available for download.

RFID

BASICS AND GLOSSARY

Adhesive label
Self-adhesive RFID data carrier

Air interface
Air gap between the data carrier and (read/)write head through which the data and energy are transmitted.

Autoclave compatible
Capable of being thermally treated in the pressure area of a gas-tight, closable pressure container. The object is to sterilize materials or cure materials in this pressure container, the so-called autoclave, to vulcanize tires and belts and compress fiber composites. Selected data carriers are suitable for use in autoclaves.

BIS C
Balluff RFID product group which describes low frequency (LF) RFID solutions operating at 70/455 kHz. These products are traditionally used for tool identification (Tool-ID).

BIS L/VL
Balluff RFID product group which describes low frequency (LF) RFID solutions operating at 125 kHz. These are suited for simple identification tasks.

BIS M/VM
Balluff RFID product group which describes high frequency (HF) RFID solutions, operating at 13.56 MHz. It supports ISO standards (e.g. DIN ISO 15693, DIN ISO 14443A) and is suitable for a variety of applications.

BIS U/VU
Balluff RFID product group which describes ultra-high frequency (UHF) system solutions operating at 860 to 960 MHz. Especially suited for applications in which long read distances and multi-tagging are required.

BIS V
Designation for a Balluff RFID processor/controller unit. This version supports read heads/ antennas from the product families BIS VL, BIS C, BIS VM, BIS VU and IO-Link.

Charger, charging cradle
Accessory for the handheld programmer, the handy programmer, and the handheld device.

Checksum
Information written to the data carrier as 2 bytes. 2 bytes per block are lost.
A detailed listing is contained in the manual for the processor unit.

Clear zone (RFID)
Area free of metal around the data carrier, to achieve a prescribed read/write distance.

Code present
Message indicating that the data carrier is within the detection range of the read/write head. The data can now be read and written.

Configuration file (GSD, GSDML, EDS, …)
File (driver file) for incorporating fieldbus components into the controller.
The file contains the fieldbus-specific settings.

Clamp
Mechanical accessory for mounting read/write heads, data couplers and processor units. Includes mounting brackets, mounting plates, and mounting bases.

CRC Check
Cyclic redundancy check. This is a procedure for determining a check value for data in order to detect errors in transmission or saving.

Data bolt
Data carrier which is integrated into a threaded body. The threaded body is available in various thread sizes, screw sizes and materials. Also referred to as databolt.

Data coupler RFID
Data transmitter which uses induction to send data over a short air gap, thereby eliminating a double mechanical interface.

Data carrier
Electronic data storage device as part of an RFID system for data of any kind. Can be read or programmed by computers, peripherals or automation equipment. Also referred to as a tag. For use in industrial applications there are data carriers in various forms (round, rectangular, special form factors), made of various materials and with different antenna technologies.

Data carrier chip
Memory chip in a data carrier which defines the memory capacity and memory structure.

DIN ISO 14443
International series of standards for non-contact chip cards. These are used in identification systems and access control, but also for payment applications such as credit cards, public transportation tickets etc. Operates at a frequency of 13.56 MHz.

DIN ISO 15693
International series of standards for non-contact chip cards, access control and payment applications. Operates at a frequency of 13.56 MHz and is the prevailing standard in automation.

Docking station
Device for connecting portable devices such as an RFID handheld device to a fixed power source. Also called a docking station.

Dynamic read mode
Operating mode of an RFID solution: The processor unit accepts the read/write request from the control system and stores the information regardless of whether there is a data carrier in the active range of the read/write head. As soon as a data carrier enters the active range of the read/write head, the job is executed. This is also known simply as dynamic mode.

Easy loop ID
BIS L system approach with the ability to connect up to 16 read heads to a higher level system through a single processor unit.

Easy Tool-ID
Workaround for machine tools that do not have an integrated tool ID function. Consists of a tool stand with integrated read/write head, a processor unit, a microcontroller and the power supply.

E-Kanban

A system which uses various technologies for controlling the use of components and materials in the manufacturing process. In the electronic version, so-called E-Kanban, RFID data carriers and barcodes replace conventional kanban instruments such as cards. The result is a faster information flow.

Ferrite antenna

Rod shaped inductive antenna for receiving RFID signals. It is built into the data carrier as well as the read/write head and has a polarizing and directional characteristic. When the end of a ferrite bar is pointed at the transmitter, the receiving field strength and thereby the read distance between data carrier and read/write head is reduced. The data carrier and read/write head must therefore be calibrated to each other.

Flush installation

Specification for sensor/read-write head installation to indicate whether the sensor or read/write head may be embedded in metal up to the active surface. This is a function of its design and ensures flawless operation. The switching distance/range is less than for differently constructed sensors/read-write heads of the same size.

Handheld RFID reader/writer
Handheld programmer,
Handy programmer

Device for portable writing and reading data carriers. Available for the various technologies LF (low frequency), HF (high frequency), UHF (ultra-high frequency). Ideal for use in harsh environments. Data is transmitted over optional WLAN, Bluetooth or a wired USB connection.

HF

High frequency of 13.56 MHz. Especially suited for use of RFID technology at close range up to 400 mm. The energy transmission of this high-frequency identification system is by means of a magnetic field using inductive coupling.

High memory

Data carriers with a memory capacity > 8K. The performance specifications from applications in automation also require high speed data transmission. Both can be achieved using selected components.

High-speed data carrier

RFID memory which was developed for applications in which it must provide the data to the controller system time-optimized. In combination with the associated read/write heads two to three times the read speed can be achieved compared with applications compliant with the DIN ISO 15693 standard.

High-temperature data carrier

RFID data carrier for temperature-resistant use in industrial environments at temperatures up to 220 °C (storage temperature).

Hollow taper shank (HSK)

Tool holder used in machine tools. Integration into the tool is extremely simple thanks to the standardized size for installation in hollow shank tapers HSK in accordance with DIN 68871-A and steep tapers SK in accordance with ISO/DIS 12164-1.

LF

Low frequency (70 kHz or 125 KHz). The power in LF identification systems is transmitted via a magnetic field by means of inductive coupling. Appropriate for use in difficult conditions such as metal surroundings.

Metal-free installation

Installation/mounting specification, generally defines an installation situation needed for proper function without the use of metallic materials in order to achieve defined data sheet values.

Mifare
World's most often used contactless chip card technology. Complies with ISO-Standards ISO 7816 and ISO 14443A.

Mounting bracket/base/plate
Mechanical accessory for mounting read/write heads, data couplers and processor units. Examples are clamping holders or mounting brackets.

Mold ID
System solution for automated managing of injection molding tools in the plastics industry.

NFC
Near field communication: An international transmission standard based on RFID for contactless exchange of data using electromagnetic induction and loosely coupled coils over short distances of a few centimeters and a data transfer rate of maximum 424 kBit/s.

Non-flush mounting
Specification for installing sensors or read/write heads which do not have a metal housing surrounding their sensing face. These can be recognized by their "caps". This design ensure flawless sensor function. The switching distance/range and permissible offset are greater than for flush mount sensors or read/write heads of the same size.

Offset
Positioning tolerance between the read/write head and the data carrier

Pistol grip
Accessory for the handheld programmer, the handy programmer, and the handheld device.

Processor unit
Essential component of an RFID system which is used for signal processing and preparation. Usually used or combined with an integrated interface for connecting to the controller/ PC system. It is also referred to as a controller.

Process data buffer
In processor units connecting multiple read/write heads the process data buffer is divided into read/write head-specific areas. Process data is the data which is obtained from a technical process by means of a read/write head. The process data represents the current status.

Reader chip
Memory chip in a data carrier which defines the memory capacity and memory structure.

Read head
The part of an RFID system that supplies the data carrier with power and reads the data stored on it. The read head then passes the data to a processor unit which further processes the data.

Read/write head
Part of an RFID system that supplies the data carrier with power and reads the data stored on it and stores new data. The read head then passes the data to a processor unit which further processes the data.

Read/write time data carrier
Time a data carrier requires for detecting/transmitting data. Comprised of: Data carrier detection + read/write time of the data blocks taken together. The read/write time varies with the data carrier type (FRAM, EEPROM) and the transmission standard.

RFID
Radio frequency identification: Communication technology for non-contact and automatic identification of objects (including merchandise, goods, people, animals using radio waves).

RFID data carriers
Electronic data storage medium as part of an RFID system. It can be read and, in specific configurations, also written. Also called a transponder.

Rod antenna
Rod shaped inductive antenna for receiving RFID signals (ferrite antenna). It is built into the data carrier as well as the read/write head and has a polarizing and directional characteristic. When the end of a ferrite bar is pointed at the transmitter, the receiving field strength and thereby the read distance between data carrier and read/write head is reduced. The data carrier and read/write head must therefore be calibrated to each other

Round antenna
Device for receiving RFID signals. In contrast to the bar/ferrite antenna it has no polarizing or directional effect. The electrostatic lobe is distributed evenly around the antenna. The round antenna is used both in data carriers and in the read/write head. Therefore these need to be tuned to each other.

Service interface
Connection point for various devices. For service purposes it sends device-specific setting data and is not suitable or standardized as a process interface.

Simultaneous operation
Multiple read/write heads are read by a processor unit (controller) simultaneously.

Slow tag detection
Data carrier detection whereby the antenna on the read/write head is switched on for detection only every 200 ms.

Static read mode
Mode of operation of an RFID system. The data carrier remains in place in front of the read/write head. This enables a greater read/write distance than in dynamic mode.

Subnet 16
Special solution approach for systematic wiring and for operating multiple read/write heads with a gateway component.

Tag
Electronic data storage device used as part of an RFID system for data of any kind. Can be read or programmed by computers, peripherals or automation equipment. For use in industrial applications there are data carriers in various forms (round, rectangular, special form factors), made of various materials and with different antenna technologies. Also referred to as a data carrier.

Taper (SK)
Standardized form of a tool holder for clamping various tools in the main spindle of a machine tool. The taper is standardized in DIN ISO 7388 Part 1. The main field of application is in milling machines.

Tool ID

Identification of tools and tool data for automated detection, traceability of tool data in the area of machine tools. Data carriers and read/write heads are generally installed in metallic surroundings. The requirements for read distance and installation conditions are generally high.

UHF

Ultra high frequency (865 to 960 MHz). The power transmission in UHF identification systems takes place by means of electromagnetic waves as in the classic radio systems. Appropriate for use over larger distances (several meters).

UID

Unique identifier for RFID data carriers. Each number is assigned only once.

Workpiece identification

Identification of workpieces, semi- and finished products or workpiece carriers. The requirements vary depending on the materials used. Compared with tool identification the requirements for read distance are generally low to moderate. "Dynamic reading" operating mode is often used.

RFID SYSTEMS HF (13.56 MHZ) BIS M
RFID SYSTEMS LF (70/455 KHZ) BIS C
RFID SYSTEMS LF (125 KHZ) BIS L

Mounting

Flush in steel
The sensing surface can be mounted on the surface of steel so that it is even with adjacent areas.

Non-flush on steel
The sensing surface must not be in contact or surrounded by steel.

Non-metal
The entire clear zone must remain free of any type of metal.

Mounting in steel

To reach the specified read/write distance, the data carrier in the metallic environment must be mounted within a certain metal-free clear zone.

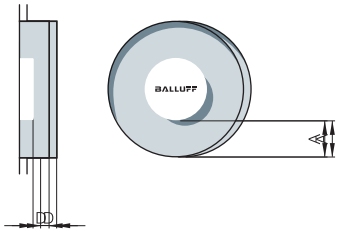

Round data carriers

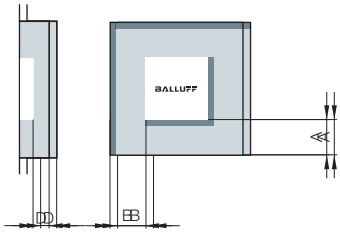

Block-style data carriers

For further information see data sheets of read/write heads on www.balluff.com

Spatial arrangement of read/write head or read head and data carrier

The key to reliable data exchange between the read/write head or read head and the data carrier is maintaining sufficient dwell time of the data carrier within a specified spatial distance from the read/write head or read head.

For a static read/write or read operation, the data carrier comes to a complete stop in front of the read/write or read head; This enables a larger distance between the two.

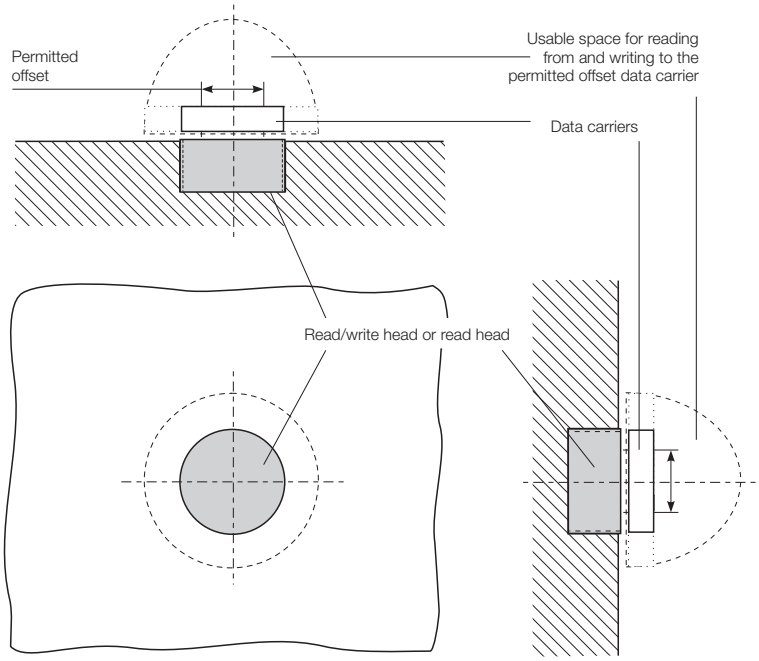

Spatial arrangement of read/write heads or read head and data carrier for non-directional read/write heads or read heads and non-flush mounting (round antenna).

For dynamic operation the data carrier is read or programmed on the fly as it moves past the read/write head or read head. The shorter distance is necessary in order to achieve as large a read/write path or read path as possible. Each read/write head or read head has certain data carriers which can be used with it (the pairing is based on physical size and antenna field configuration).

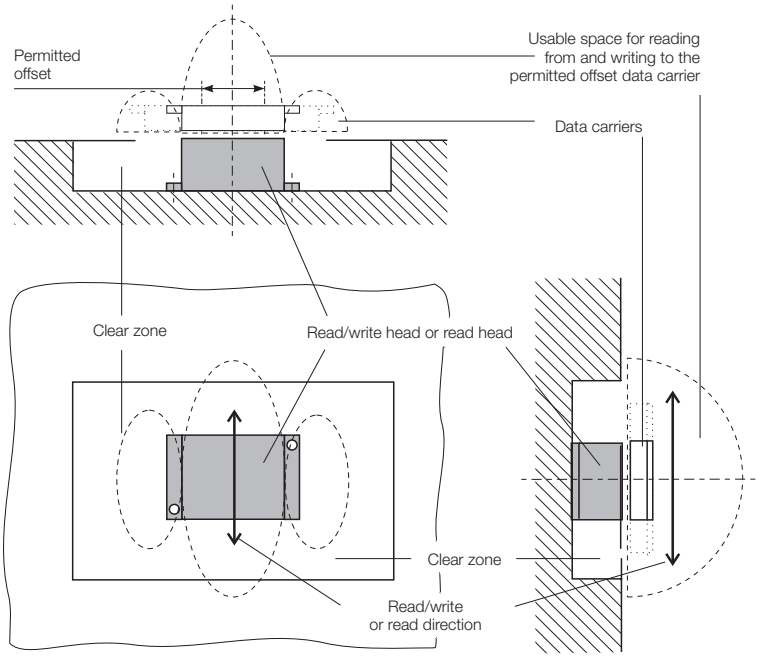

Spatial arrangement of read/write heads or read head and data carrier for directional read/write heads or read heads and non-flush mounting (rod antenna).

RFID SYSTEMS HF (13.56 MHZ) BIS M

Read times BIS M-1xx-0x and BIS M-1xx-20

EEPROM – data carrier with 16 byte blocks		FRAM – data carrier with 16 byte blocks	
Bytes	Read time	Bytes	Read time
0 to 15	20 ms	0 to 15	30 ms
For each additional started 16 bytes add additional	10 ms	For each additional started 16 bytes add additional	15 ms

Read times for BIS M-1xx-1x and BIS VM-3xx-401-S4

FRAM – data carrier with 64 byte blocks	
Bytes	Read time
0 to 63	14 ms
For each additional started 64 bytes add additional	6 ms

Write times BIS M-1xx-0x and BIS M-1xx-20

EEPROM – data carrier with 16 byte blocks		FRAM – data carrier with 16 byte blocks	
Bytes	Read time	Bytes	Read time
0 to 15	40 ms	0 to 15	60 ms
For each additional started 16 bytes add additional	30 ms	For each additional started 16 bytes add additional	40 ms

Write times for BIS M-1xx-1x and BIS VM-3xx-401-S4

FRAM – data carrier with 64 byte blocks	
Bytes	Read time
0 to 63	30 ms
For each additional started 64 bytes add additional	15 ms

Write/read cycles

Data carriers	Memory type	Write cycles	Read cycles	Data retention time
112 bytes	EEPROM	100000	Unlimited	10 years
160 bytes	EEPROM	100000	Unlimited	10 years
736 bytes	EEPROM	100000	Unlimited	10 years
752 bytes	EEPROM	100000	Unlimited	10 years
992 bytes	EEPROM	100000	Unlimited	10 years
2,000 bytes	FRAM	Unlimited	Unlimited	10 years
8,192 bytes	FRAM	Unlimited	Unlimited	10 years
32,768 bytes	FRAM	Unlimited	Unlimited	10 years
65,536 bytes	FRAM	Unlimited	Unlimited	10 years
131,072 bytes	FRAM	Unlimited	Unlimited	10 years

Minimum distance between two data carriers

	BIS M-122-01/L, BIS M-122-02/L	BIS M-110-02/L	BIS M-101-01/A, BIS M-111-02/A	BIS M-102-01/L, BIS M-112-02/L	BIS M-105-01/A, BIS M-105-02/A	BIS M-108-02/A	BIS M-120-01/L	BIS M-151-02/A, BIS M-150-02/A
BIS M-300		>100	>100	>150	>100	>100		
BIS M-301		>200	>200	>200	>100	>200	>250	
BIS M-302, BIS VM-307	>100	>100	>100	>100	>100	>100		
BIS M-304	>100	>100	>100	>100	>100	>100		
BIS M-400-007-001-00-S115		>100	>100	>150	>100	>100		
BIS M-401-007-001-00-S115		>200	>200	>200	>100	>200	>250	
BIS M-400-007-002-00-S115	>100	>100	>100	>100	>100	>100		
BIS M-351, BIS VM-351								>250
BIS M-451-007-001-00-S115								>250

Dimensions in mm

Minimum distance between two read/write heads

BIS M-300	200
BIS M-301	600
BIS M-351/BIS VM-351	600
BIS M-302/BIS VM-307	100
BIS M-304	100
BIS M-400-007-001-00-S115	200
BIS M-401-007-001-00-S115	600
BIS M-451-007-001-00-S115	600
BIS M-400-007-002-00-S115	100
BIS M-410-007-002-00-S115	200
BIS M-411-007-002-00-S115	300
BIS VM-305-001-S4	100
BIS VM-341-401-S4	600
BIS VM-343-401-S4	50
BIS VM-344-401-S4	200
BIS VM-345-401-S4	200
BIS VM-346-401-S4	50
BIS VM-348-401-S4	50
BIS VM-352-001-S4	100
BIS VM-355-401-S4	200

Dimensions in mm

RFID SYSTEMS LF (70/455 KHZ) BIS C

Installation in aluminum

With clear zone, static operation

When installing components in aluminum, provide clear zones for trouble-free operation. In static operation, the depth of the clear zone in aluminum of at least 10 mm must be observed, Figure 1. Clear zone dimension A corresponds to the diameter of the larger communication partner (data carrier or read/write head) plus the maximum possible offset (see information for read/write head), Figure 2. In combination with the read/write heads BIS C-318, 327, 328, 350, 351 and 355, dimension B and C is calculated over the length and width of the larger communication partner (data carrier or read/write head) plus the maximum possible offset (see information for read/write head), Figure 3.

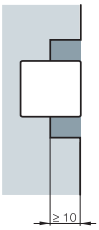

Fig. 1

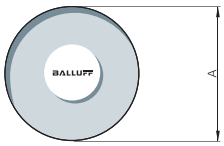

Fig. 2

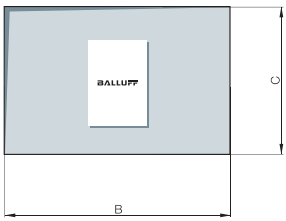

Fig. 3

With clear zone, dynamic operation

In dynamic operation, the depth of the clear zone in aluminum also has to be at least 10 mm, Figure 1. Clear zone dimension A corresponds to twice the diameter of the larger communication partner and the equivalent of the diameter of the smaller communication partner. Clear zone dimension C corresponds to the diameter of the larger communication partner plus the corresponding maximum offset (see information for read/write head), Figure 4. In combination with the read/write heads BIS C-318, 327, 328, 350, 351 and 355, dimension B is calculated from twice the read/write distance (see information about read/write heads) plus the width of the data carrier. Clear zone dimension C corresponds to the read/write head length plus the corresponding maximum offset (see specification for read/write head), Figure 5.

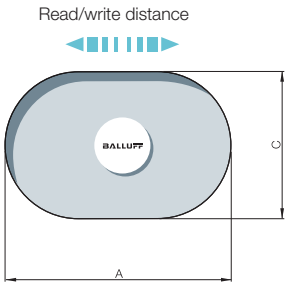

Fig. 4

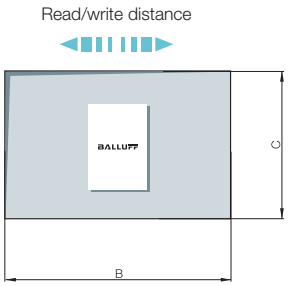

Fig. 5

Read/write cycles

Data carriers	Memory type	Coding	Write cycles up to 30 °C	Write cycles up to 70 °C	Read cycles	Memory organization
511 bytes	EEPROM	-04	1000000	500000	Unlimited	32-byte blocks
1023 bytes	EEPROM	-05	1000000	500000	Unlimited	32-byte blocks
2047 bytes	EEPROM	-11	1000000	500000	Unlimited	64-byte blocks
8 kbytes	FRAM	-32	Unlimited	Unlimited	Unlimited	64-byte blocks

Read times in static mode

For double read and compare:

Data carrier with 32 bytes per block		Data carrier with 64 bytes per block	
Bytes	Read time	Bytes	Read time
From 0 to 31	110 ms	From 0 to 63	220 ms
For each additional started 32 bytes add additional	120 ms	For each additional started 64 bytes add additional	230 ms
From 0 to 255	= 950 ms	From 0 to 2047	= 7350 ms

Write times in static mode

Includes checking and comparing:

Data carrier with 32 bytes per block		Data carrier with 64 bytes per block	
Bytes	Write time [ms]	Bytes	Write time [ms]
From 0 up to 31	110 + n × 10	From 0 up to 63	220 + n × 10
≥ 32	y × 120 + n × 10		y × 230 + n × 10
From 0 up to 255	= max. 3510	From 0 up to 2047	= max. 27830

n = Number of contiguous bytes to write
y = Number of blocks to process

Read times in dynamic operation

Read times within the 1st block for double read and compare:

Data carrier with 32 bytes per block		Data carrier with 64 bytes per block	
Bytes	Read time	Bytes	Read time
From 0 up to 3	14 ms	From 0 up to 3	14 ms
For all additional bytes	3.5 ms	For all additional bytes	3.5 ms
From 0 up to 31	112 ms	From 0 up to 64	224 ms

The times indicated apply after the data carrier has been detected. If the tag has not been recognized, an additional 30 ms must be added to allow for creating the energy field necessary to recognize the data carrier.

Memory organization

Memory size up to 1023 bytes = 32 bytes per block
Memory size 2047 bytes and larger = 64 bytes per block

Maximum speed

To calculate the permitted speed in which the data carrier and head move relative to each other, the static distance values are used. The permissible speed is:

$$V_{max.perm.} = \frac{\text{Path}}{\text{Time}} = \frac{2 \times |\text{offset value}|}{\text{Processing time}}$$

The offset value is dependent on the read/write distance actually used in the system.

$$\text{Processing time} = \text{Data carrier response time} + \text{Read/write time of first block to be read} + n^1 \times \text{Read/write time for additional started blocks}$$

n^1 = number of started blocks

Installation in taper SK

Data Carriers	BIS C-122			BIS C-103			BIS C-105		
Taper DIN 69871-A	D^{H11}	t ±0.15	rpm max	DH11	t ±0.15	rpm max	D^{H11}	t± 0.15	rpm max
No. 30	10	4.65	90000	12	8.15	68000	12	6.15	68000
No. 40	10	4.65	75000	12	8.15	54000	12	6.15	54000
No. 45	10	4.65	66000	12	8.15	43000	12	6.15	43000
No. 50	10	4.65	59000	12	8.15	33000	12	6.15	33000

Dimensions in mm

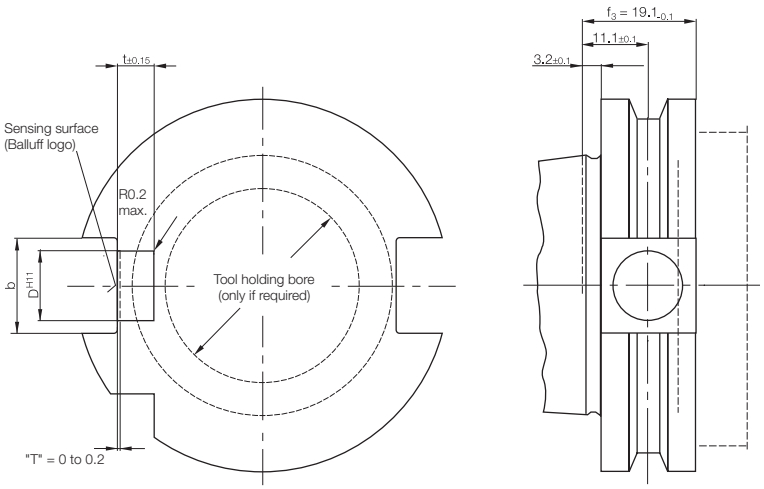

Installation in retention knob

Data Carriers	BIS C-122		BIS C-103		BIS C-105	
Taper DIN 69871-A	D^{H11}	t ±0.15	D^{H11}	t ±0.15	D^{H11}	t ±0.15
No. 30						
No. 40	10	4.65				
No. 45	10	4.65	12	8.15	12	6.15
No. 50	10	4.65	12	8.15	12	6.15

Dimensions in mm

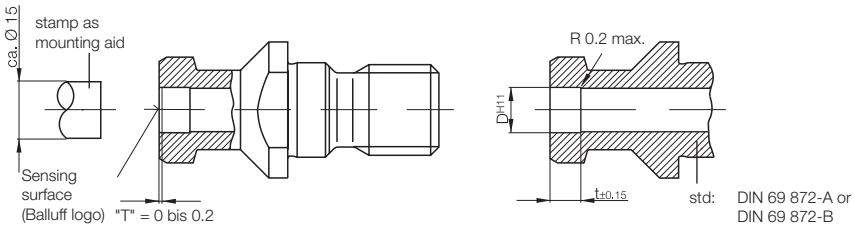

Installation:

1. Degrease gluing surfaces.
2. Apply a bead of glue approximately 3 mm wide around the perimeter of the data carrier housing (recommended glue e.g. LOCTITE Hysol 1C or UHU-Plus endfest 300), observe manufacturer's processing instructions
3. Press in data carrier housing manually, observe dimension "T"
4. Remove excess glue
5. Allow to cure

Installation in hollow shank taper HSK

Data Carriers	BIS C-122	
HSK Form A ISO/DIN 12164-1	$h_{3\ +0,20}$	rpm_{max}
32	5.4	96000
49	5.2	80000
50	5.1	75000
63	5	65000
80	4.9	57000
100	4.9	48000

Dimensions in mm

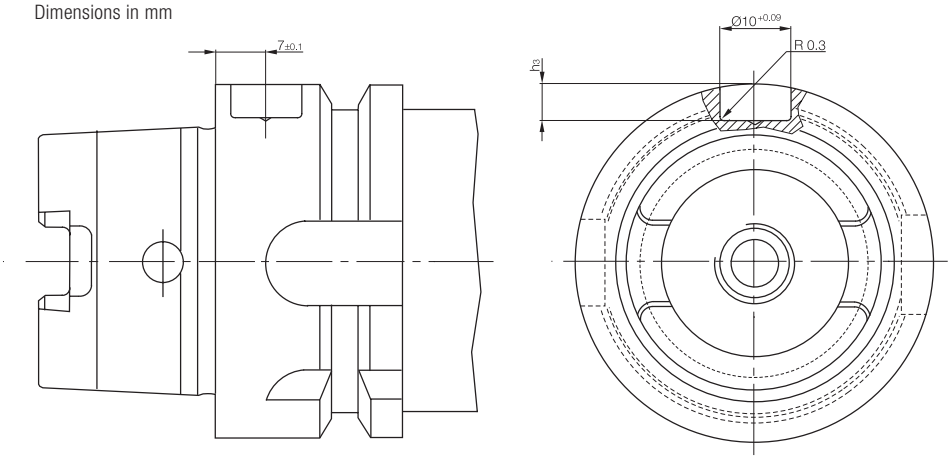

Mechanical strength

Data carriers and read/write heads BIS C-1xx, BIS C-3xx	
Shock load	100 g/6 ms per EN 60068-2-27 and 100 g/2 ms per EN 60068-2-29
Vibration	20 g, 10...2000 Hz per EN 60068-2-6
	Values apply to data carriers BIS C-1xx and read/write heads BIS C-3xx except for the non-potted read/write heads BIS C-350, BIS C-351, BIS C-352 and BIS C-355.

Processor units and non-potted read/write heads BIS C-6xxx, BIS C-350, BIS C-351, BIS C-352, BIS C-355	
Shock load	15 g/11 ms per EN 60068-2-27 and 15 g/6 ms per EN 60068-2-29
Vibration	5 g, 10...150 Hz per EN 60068-2-6

RFID SYSTEMS LF (125 KHZ) BIS L

easy loop® communication module

easy loop® provides compact read heads and a communication module for simple connection to the controller at minimal cost for extending BIS L systems. Prefabricated cable and connectors for fast, proper connections. No need to configure addresses.

Install the BIS L simply by connecting up to eight read heads on each of two lines with the easy loop® interface. One cable is all you need for the simple installation of BIS L, a separate power supply is not necessary. All processor units function independently to allow dynamic operation: Data is transferred reliably when the data carrier passes by.

Read times BIS L-1xx

Serial number detection typically 110 ms*

Data carrier with 4 byte blocks	
Bytes	**Read time**
From 0 to 3	180 ms
For each additional started 4 bytes add additional	90 ms

Read times BIS L-1xx

Serial number detection = reading data carriers = typically 100 ms*

Write times BIS L-1xx

Data carrier with 4 byte blocks	
Bytes	**Write time**
From 0 to 3	305 ms
For each additional started 4 bytes add additional	215 ms

*Only applies to the parameter type and output of the serial number.

All information is provided as general values. Deviations are possible depending on the application and combination of read/write head and data carrier.

Minimum distance between two data carriers

	BIS L-100-01/L	BIS L-101-01/L	BIS L-102-01/L	BIS L-103-05/L	BIS L-200-03/L	BIS L-100-05/L-RO	BIS L-201-03/L	BIS L-101-05/L-RO	BIS L-202-03/L	BIS L-102-05/L-RO	BIS L-203-03/L	BIS L-103-05/L-RO	BIS L-150-05/A
BIS VL-300-001-S4	250	300	400	250	250	250	300	300	400	400	250	250	
BIS VL-301-001-S4	300	400	500	350	350	350	400	400	500	500	350	350	
BIS VL-302-001-S4	300	400	500	350	350	350	400	400	500	500	350	350	
BIS VL-304-001-S4	150	200	200	180	180	180	200	200	250	250	180	180	
BIS VL-306-001-S4	80			50							50		
BIS VL-350-001-S4													50

Dimensions in mm

Minimum distance between two read/write heads

BIS VL-300-001-S4	400
BIS VL-301-001-S4	800
BIS VL-302-001-S4	200
BIS VL-304-001-S4	200
BIS VL-306-001-S4	100
BIS VL-350-001-S4	100

Dimensions in mm

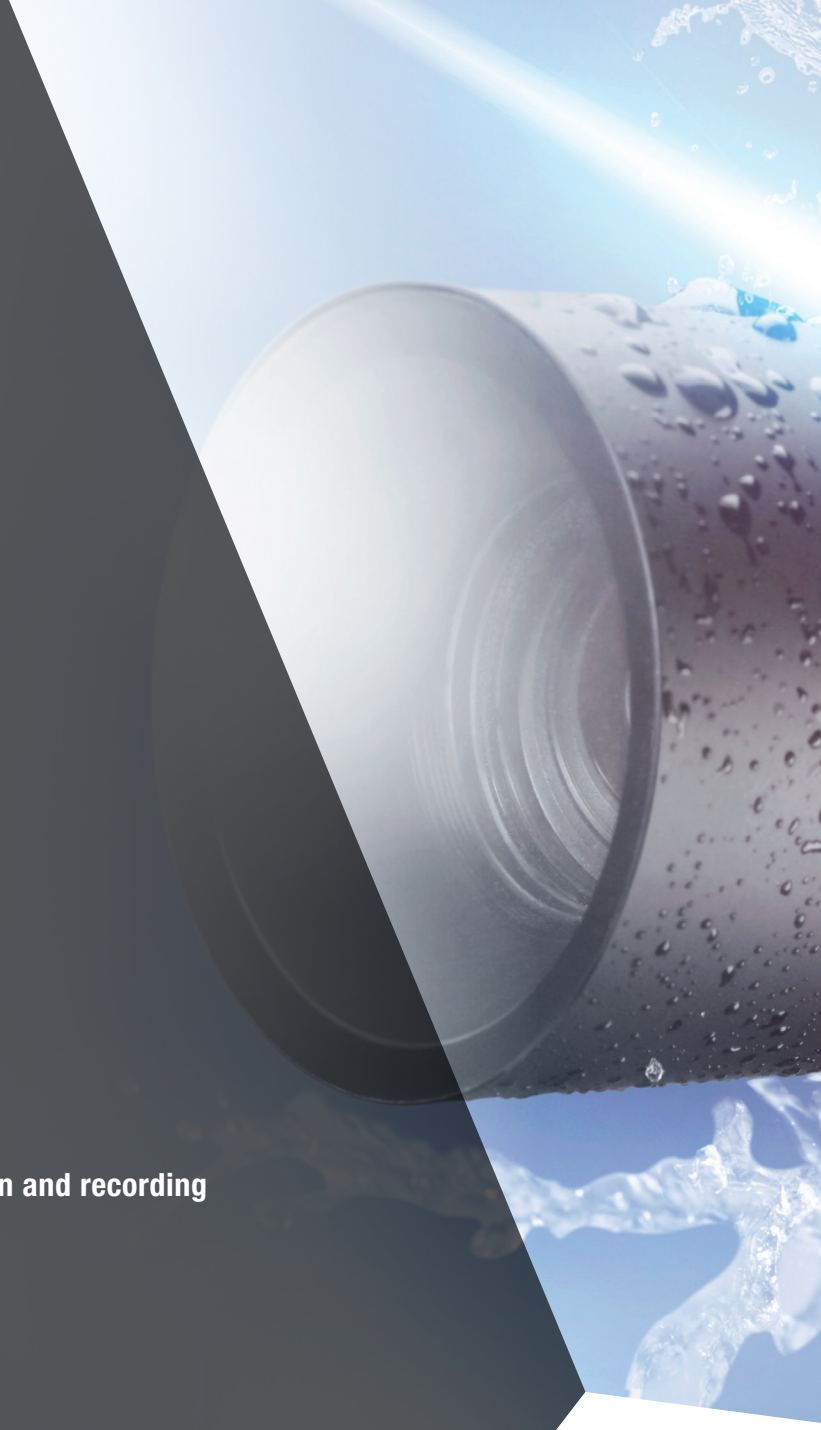

Image processing devices for reliable detection and recording

MACHINE VISION AND OPTICAL IDENTIFICATION

innovating automation

The demands on modern production equipment are high: they must be extremely productive and flexible – while achieving maximum quality. Our Balluff Vision Solutions are designed precisely to meet these requirements. They reliably detect error, verify quality and are suitable for reliable reading and verification of codes. They scan objects, 1D and 2D barcodes, and plain text.

The sensors are extremely flexible – for parts checking in assembly or parts tracking in production. Their standardized interface means the devices are simple to integrate and easy to use.

Your Balluff solutions

- Machine vision
- Optical identification

MACHINE VISION AND OPTICAL IDENTIFICATION

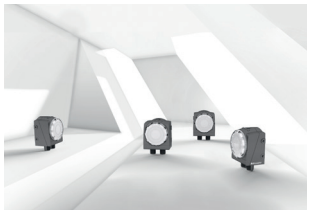

508
MACHINE VISION

510 Industrial cameras
516 BVS-E Universal vision sensor
520 BVS-E Advanced vision sensor
524 BVS E Infrared vision sensor
528 BVS-E Standard vision sensor

532
OPTICAL IDENTIFICATION

534 Handheld-Code-Reader BVS HS-P
538 Code-Reader BVS E Identification

542

BASICS AND GLOSSARY

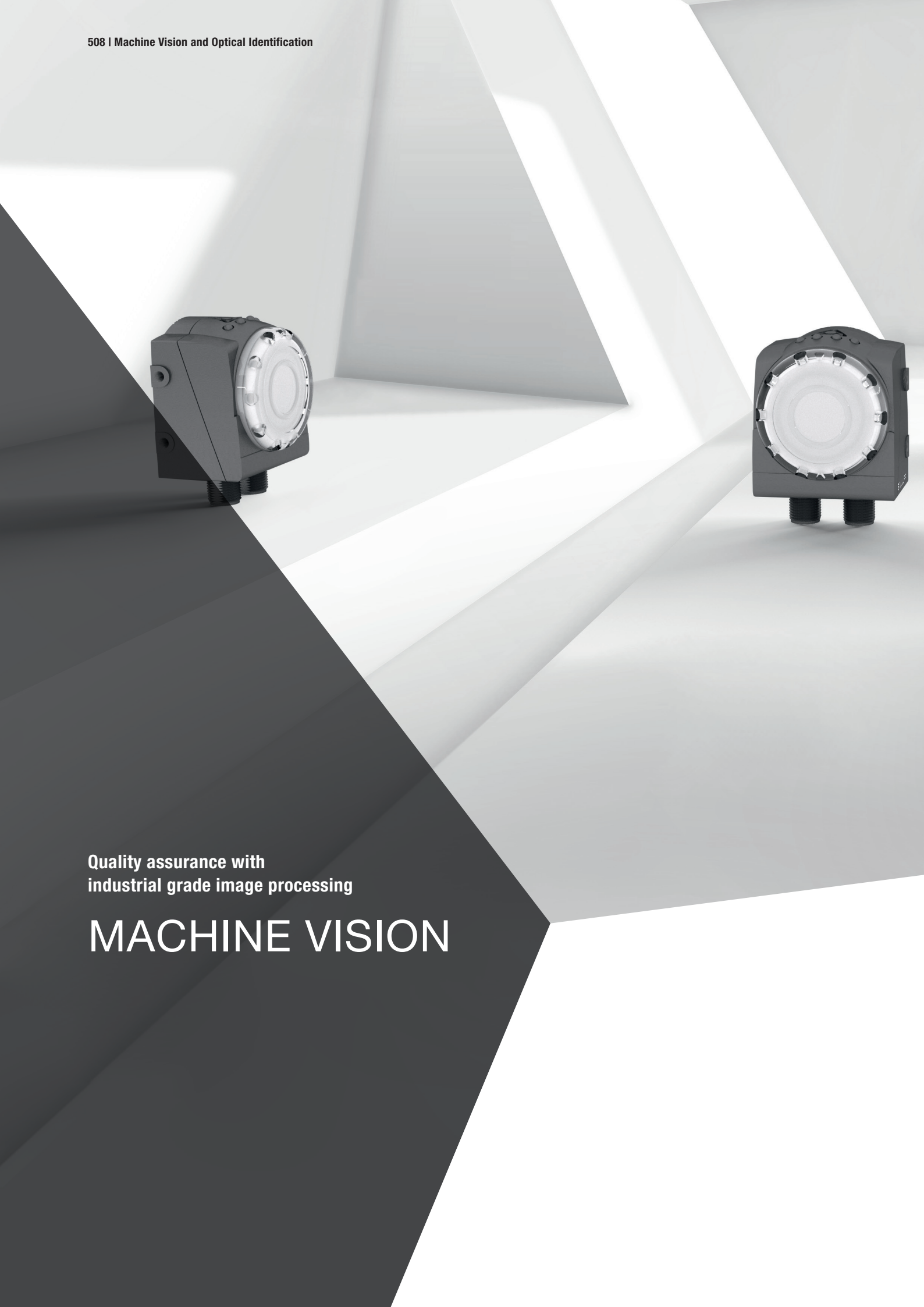

Quality assurance with industrial grade image processing

MACHINE VISION

Machine Vision from Balluff ensures quality and flexibility in modern production facilities. Through the use of industrial image processing, they provide reliable defect detection and thereby ensure exact quality control. All functions of the sensors can be flexibly combined.

You can also assemble your vision solution online to ensure that it precisely fits your requirements. Use the intuitive Machine Vision Configurator on our web site.

Features

- High cost-effectiveness and potential for cost reduction
- Less scrap thanks to early defect detection
- High system up-time when changing batches
- Machine Vision Configurator

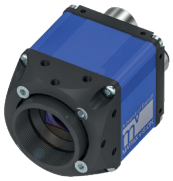
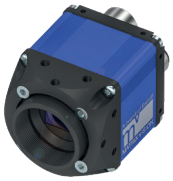
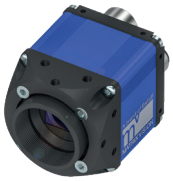

	BVS003C BVS CA-GX0-0016ZC-111C41-XAS2	**BVS003A** BVS CA-GX0-0016ZG-112C41-XAS2	**BVS0035** BVS CA-GX0-0124AC-111C41-XAS2
Version	GigE Vision industrial camera	GigE Vision industrial camera	GigE Vision industrial camera
Interface	Gigabit Ethernet, PoE	Gigabit Ethernet, PoE	Gigabit Ethernet, PoE
Lens mount	C-Mount	C-Mount	C-Mount
Dimension	40 x 40 x 68.7 mm	40 x 40 x 68.7 mm	40 x 40 x 68.7 mm
Sensor type Vision	1/2.9“ global shutter CMOS	1/2.9“ global shutter CMOS	1.1“ global shutter CMOS
Sensor chip	Sony IMX273	Sony IMX273	Sony IMX304
Image resolution	1.6 MP (1456 x 1088 pixels)	1.6 MP (1456 x 1088 pixels)	12.4 MP (4112 x 3008 pixels)
Housing material	Aluminum	Aluminum	Aluminum
Image formats	BayerRG8, BayerRG10, BayerRG12, BayerRG16, BayerRG12Packed, BayerRG12p	Mono8, Mono10, Mono12, Mono14, Mono16, Mono12Packed, Mono12p	BayerRG8, BayerRG10, BayerRG12, BayerRG16, BayerRG12Packed, BayerRG12p
Operating voltage Ub	11...25 VDC, PoE	11...25 VDC, PoE	11...25 VDC, PoE
Ambient temperature	0...45 °C	0...45 °C	0...45 °C
Approval/Conformity	CE, EAC, WEEE, cULus	CE, EAC, WEEE, cULus	CE, EAC, WEEE, cULus
Protection degree	IP67	IP67	IP67
Productview	Page 514	Page 514	Page 514

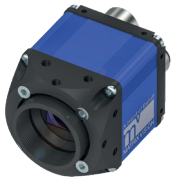
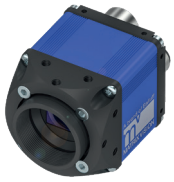
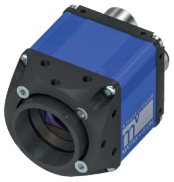
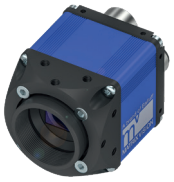
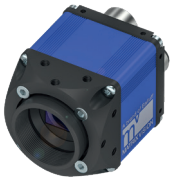

	BVS0034 BVS CA-GX0-0124AG-112C41-XAS2	BVS0039 BVS CA-GX0-0032AC-111C41-XAS2	BVS0038 BVS CA-GX0-0032AG-112C41-XAS2	BVS0037 BVS CA-GX0-0051AC-111C41-XAS2	BVS0036 BVS CA-GX0-0051AG-112C41-XAS2
	GigE Vision industrial camera	GigE Vision industrial camera	GigE Vision industrial camera	GigE Vision industrial camera	GigE Vision industrial camera
	Gigabit Ethernet, PoE	Gigabit Ethernet, PoE	Gigabit Ethernet, PoE	Gigabit Ethernet, PoE	Gigabit Ethernet, PoE
	C-Mount	C-Mount	C-Mount	C-Mount	C-Mount
	40 x 40 x 68.7 mm	40 x 40 x 68.7 mm	40 x 40 x 68.7 mm	40 x 40 x 68.7 mm	40 x 40 x 68.7 mm
	1.1“ global shutter CMOS	1/1.8“ global shutter CMOS	1/1.8“ global shutter CMOS	2/3“ global shutter CMOS	2/3“ global shutter CMOS
	Sony IMX304	Sony IMX265	Sony IMX265	Sony IMX264	Sony IMX264
	12.4 MP (4112 x 3008 pixels)	3.2 MP (2064 x 1544 pixels)	3.2 MP (2064 x 1544 pixels)	5.1 MP (2464 x 2056 pixels)	5.1 MP (2464 x 2056 pixels)
	Aluminum	Aluminum	Aluminum	Aluminum	Aluminum
	Mono8, Mono10, Mono12, Mono14, Mono16, Mono12Packed, Mono12p	BayerRG8, BayerRG10, BayerRG12, BayerRG16, BayerRG12Packed, BayerRG12p	Mono8, Mono10, Mono12, Mono14, Mono16, Mono12Packed, Mono12p	BayerRG8, BayerRG10, BayerRG12, BayerRG16, BayerRG12Packed, BayerRG12p	Mono8, Mono10, Mono12, Mono14, Mono16, Mono12Packed, Mono12p
	11...25 VDC. PoE	11...25 VDC, PoE	11...25 VDC, PoE	11...25 VDC, PoE	11...25 VDC, PoE
	0...45 °C	0...45 °C	0...45 °C	0...45 °C	0...45 °C
	CE, EAC, WEEE, cULus	CE, EAC, WEEE, cULus	CE, EAC, WEEE, cULus	CE, EAC, WEEE, cULus	CE, EAC, WEEE, cULus
	IP67	IP67	IP67	IP67	IP67
	Page 514	Page 514	Page 514	Page 514	Page 514

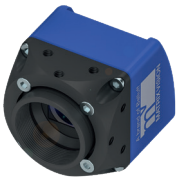
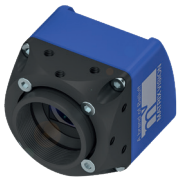
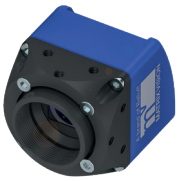

	BVS003N BVS CA-SF2-0016ZC-111121-XAS2	**BVS003M** BVS CA-SF2-0016ZG-112121-XAS2	**BVS003F** BVS CA-SF2-0124AC-111121-XAS2
Version	USB3 Vision industrial camera	USB3 Vision industrial camera	USB3 Vision industrial camera
Interface	USB 2.0 / 3.0	USB 2.0 / 3.0	USB 2.0 / 3.0
Lens mount	C-Mount	C-Mount	C-Mount
Dimension	40 x 40 x 50.9 mm	40 x 40 x 50.9 mm	40 x 40 x 50.9 mm
Sensor type Vision	1/2.9“ global shutter CMOS	1/2.9“ global shutter CMOS	1.1“ global shutter CMOS
Sensor chip	Sony IMX273	Sony IMX273	Sony IMX304
Image resolution	1.6 MP (1456 x 1088 pixels)	1.6 MP (1456 x 1088 pixels)	12.4 MP (4112 x 3008 pixels)
Housing material	Aluminum	Aluminum	Aluminum
Image formats	BayerRG8, BayerRG10, BayerRG12, BayerRG16, RGB8Packed, BGR8Packed, BGRA8Packed, BGR10V2Packed, YUV422Packed, YUV422_YUYVPacked, YUV444Packed, RGB8, BGR8, BGRa8, RGB10p32, YUV422_8_UYVY, YUV422_8, YUV8_UYV, YUV411_8_UYYVYY, BayerRG12p	Mono8, Mono10, Mono12, Mono14, Mono16, Mono12p	BayerRG8, BayerRG10, BayerRG12, BayerRG16, RGB8Packed, BGR8Packed, BGRA8Packed, BGR10V2Packed, YUV422Packed, YUV422_YUYVPacked, YUV444Packed, RGB8, BGR8, BGRa8, RGB10p32, YUV422_8_UYVY, YUV422_8, YUV8_UYV, YUV411_8_UYYVYY, BayerRG12p
Operating voltage Ub	11...25 VDC	11...25 VDC	11...25 VDC
Ambient temperature	0...45 °C	0...45 °C	0...45 °C
Approval/Conformity	CE, EAC, WEEE, ULus	CE, EAC, WEEE, ULus	CE, EAC, WEEE, ULus
Protection degree	IP30	IP30	IP30
Productview	Page 514	Page 514	Page 514

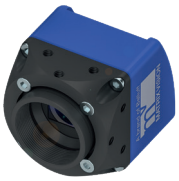
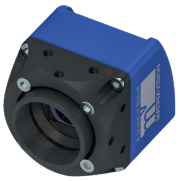
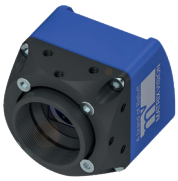
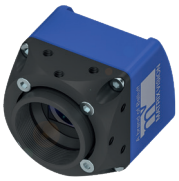
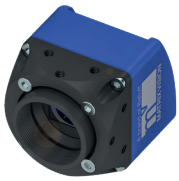

	BVS003E BVS CA-SF2-0124AG-112121-XAS2	BVS003L BVS CA-SF2-0032AC-111121-XAS2	BVS003K BVS CA-SF2-0032AG-112121-XAS2	BVS003J BVS CA-SF2-0051AC-111121-XAS2	BVS003H BVS CA-SF2-0051AG-112121-XAS2
	USB3 Vision industrial camera	USB3 Vision industrial camera	USB3 Vision industrial camera	USB3 Vision industrial camera	USB3 Vision industrial camera
	USB 2.0 / 3.0	USB 2.0 / 3.0	USB 2.0 / 3.0	USB 2.0 / 3.0	USB 2.0 / 3.0
	C-Mount	C-Mount	C-Mount	C-Mount	C-Mount
	40 x 40 x 50.9 mm	40 x 40 x 50.9 mm	40 x 40 x 50.9 mm	40 x 40 x 50.9 mm	40 x 40 x 50.9 mm
	1.1“ global shutter CMOS	1/1.8“ global shutter CMOS	1/1.8“ global shutter CMOS	2/3“ global shutter CMOS	2/3“ global shutter CMOS
	Sony IMX304	Sony IMX265	Sony IMX265	Sony IMX264	Sony IMX264
	12.4 MP (4112 x 3008 pixels)	3.2 MP (2064 x 1544 pixels)	3.2 MP (2064 x 1544 pixels)	5.1 MP (2464 x 2056 pixels)	5.1 MP (2464 x 2056 pixels)
	Aluminum	Aluminum	Aluminum	Aluminum	Aluminum
	Mono8, Mono10, Mono12, Mono14, Mono16, Mono12p	BayerRG8, BayerRG10, BayerRG12, BayerRG16, RGB8Packed, BGR8Packed, BGRA8Packed, BGR10V2Packed, YUV422Packed, YUV422_YUYVPacked, YUV444Packed, RGB8, BGR8, BGRa8, RGB10p32, YUV422_8_UYVY, YUV422_8, YUV8_UYV, YUV411_8_UYYVYY, BayerRG12p	Mono8, Mono10, Mono12, Mono14, Mono16, Mono12p	BayerRG8, BayerRG10, BayerRG12, BayerRG16, RGB8Packed, BGR8Packed, BGRA8Packed, BGR10V2Packed, YUV422Packed, YUV422_YUYVPacked, YUV444Packed, RGB8, BGR8, BGRa8, RGB10p32, YUV422_8_UYVY, YUV422_8, YUV8_UYV, YUV411_8_UYYVYY, BayerRG12p	Mono8, Mono10, Mono12, Mono14, Mono16, Mono12p
	11...25 VDC	11...25 VDC	11...25 VDC	11...25 VDC	11...25 VDC
	0...45 °C	0...45 °C	0...45 °C	0...45 °C	0...45 °C
	CE, EAC, WEEE, ULus	CE, EAC, WEEE, ULus	CE, EAC, WEEE, ULus	CE, EAC, WEEE, ULus	CE, EAC, WEEE, ULus
	IP30	IP30	IP30	IP30	IP30
	Page 514	Page 514	Page 514	Page 514	Page 514

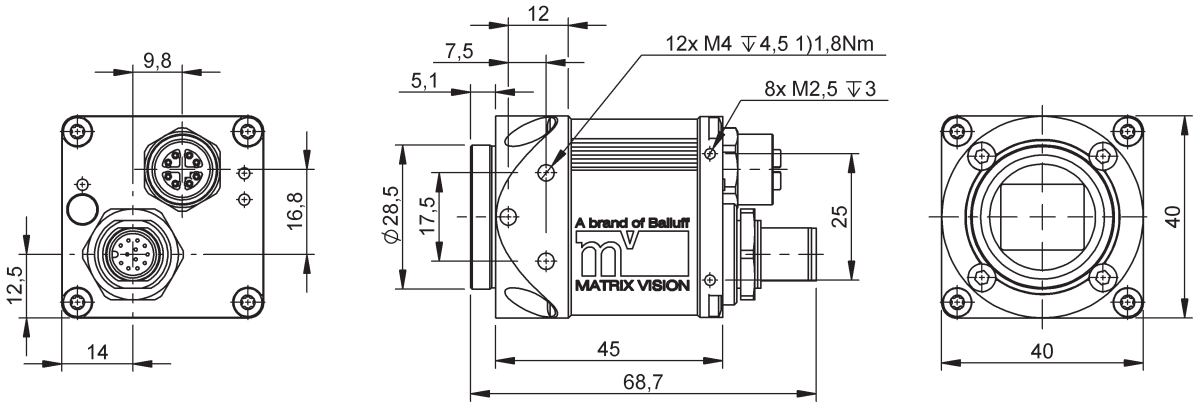

1) Tightening torque

BVS003C, BVS003A, BVS0035, BVS0034, BVS0039, BVS0038, BVS0037, BVS0036

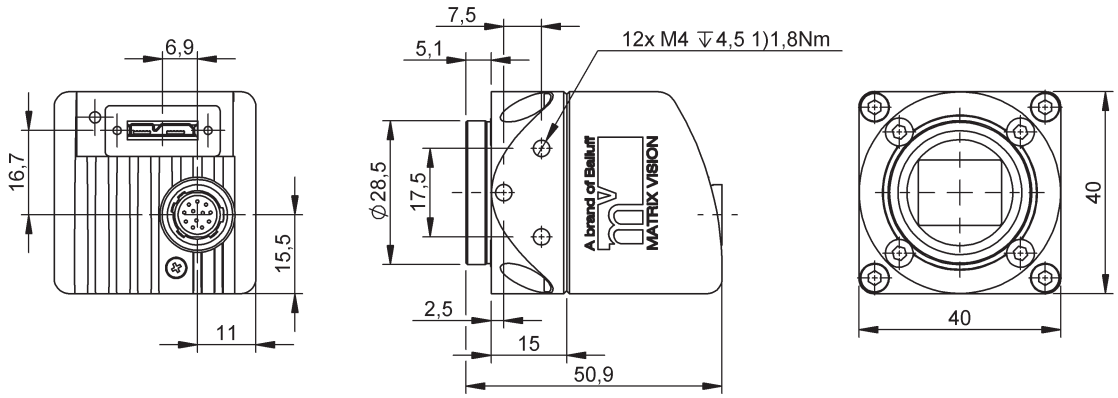

1) Tightening torque

BVS003N, BVS003M, BVS003F, BVS003E, BVS003L, BVS003K, BVS003J, BVS003H

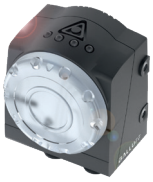
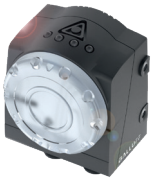
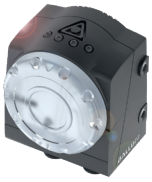

	BVS001F BVS UR-3-105-E	**BVS001H** BVS UR-3-101-E	**BVS001J** BVS UR-3-103-E
Sensor type Vision	CMOS image sensor black-white	CMOS image sensor black-white	CMOS image sensor black-white
Image resolution	VGA 640 x 480 pixels	VGA 640 x 480 pixels	VGA 640 x 480 pixels
Detection rate typ.	3…40 Hz	3…40 Hz	3…40 Hz
Application	360° detection, Barcode-, 2D-, OCR identification	360° detection, Barcode-, 2D-, OCR identification	360° detection, Barcode-, 2D-, OCR identification
Range	50...1000 mm	50...1000 mm	50...1000 mm
Field of view	34 x 25 mm ... 676 x 507 mm	24 x 18 mm ... 480 x 360 mm	16 x 12 mm ... 320 x 240 mm
Focal length	6.0 mm	8.0 mm	12.0 mm
Light type	Infrared	Infrared	Infrared
Housing material	Aluminum, die-cast ABS	Aluminum, die-cast ABS	Aluminum, die-cast ABS
Dimension	51.5 x 70 x 40 mm	51.5 x 70 x 40 mm	51.5 x 70 x 40 mm
Switching output	3x PNP normally open (NO)	3x PNP normally open (NO)	3x PNP normally open (NO)
Interface	RS232 (9.6...115.2 kBaud)	RS232 (9.6...115.2 kBaud)	RS232 (9.6...115.2 kBaud)
Connection 1	M12x1-Male, 8-pole, A-coded	M12x1-Male, 8-pole, A-coded	M12x1-Male, 8-pole, A-coded
Connection 2	M12x1-Male, 4-pole, D-coded	M12x1-Male, 4-pole, D-coded	M12x1-Male, 4-pole, D-coded
Operating voltage Ub	22...26 VDC	22...26 VDC	22...26 VDC
Ambient temperature	-10...55 °C	-10...55 °C	-10...55 °C
Approval/Conformity	CE, cULus	CE, cULus	CE, cULus
Protection degree	IP54	IP54	IP54
Productview	Page 518	Page 518	Page 518

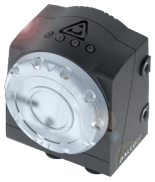
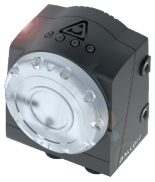
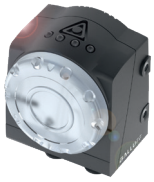
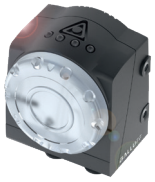
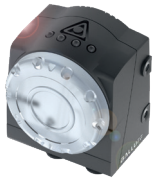

	BVS001K BVS UR-3-107-E	BVS001L BVS UR-3-005-E	BVS001M BVS UR-3-001-E	BVS001N BVS UR-3-003-E	BVS001P BVS UR-3-007-E
	CMOS image sensor black-white	CMOS image sensor black-white	CMOS image sensor black-white	CMOS image sensor black-white	CMOS image sensor black-white
	VGA 640 x 480 pixels	VGA 640 x 480 pixels	VGA 640 x 480 pixels	VGA 640 x 480 pixels	VGA 640 x 480 pixels
	3…40 Hz	3…40 Hz	3…40 Hz	3…40 Hz	3…40 Hz
	360° detection, Barcode-, 2D-, OCR identification	360° detection, Barcode-, 2D-, OCR identification	360° detection, Barcode-, 2D-, OCR identification	360° detection, Barcode-, 2D-, OCR identification	360° detection, Barcode-, 2D-, OCR identification
	230...1000 mm	50...1000 mm	50...1000 mm	50...1000 mm	50...1000 mm
	55 x 42 mm ... 240 x 180 mm	34 x 25 mm ... 676 x 507 mm	24 x 18 mm ... 480 x 360 mm	16 x 12 mm ... 320 x 240 mm	43 x 32 mm ... 240 x 180 mm
	16.0 mm	6.0 mm	8.0 mm	12.0 mm	16.0 mm
	Infrared	LED, red light	LED, red light	LED, red light	LED, red light
	Aluminum, die-cast ABS	Aluminum, die-cast ABS	Aluminum, die-cast ABS	Aluminum, die-cast ABS	Aluminum, die-cast ABS
	51.5 x 70 x 40 mm	51.5 x 70 x 40 mm	51.5 x 70 x 40 mm	51.5 x 70 x 40 mm	51.5 x 70 x 40 mm
	3x PNP normally open (NO)	3x PNP normally open (NO)	3x PNP normally open (NO)	3x PNP normally open (NO)	3x PNP normally open (NO)
	RS232 (9.6...115.2 kBaud)	RS232 (9.6...115.2 kBaud)	Ethernet 10/100 Base T	Ethernet 10/100 Base T	Ethernet 10/100 Base T
	M12x1-Male, 8-pole, A-coded	M12x1-Male, 8-pole, A-coded	M12x1-Male, 8-pole, A-coded	M12x1-Male, 8-pole, A-coded	M12x1-Male, 8-pole, A-coded
	M12x1-Male, 4-pole, D-coded	M12x1-Male, 4-pole, D-coded	M12x1-Male, 4-pole, D-coded	M12x1-Male, 4-pole, D-coded	M12x1-Male, 4-pole, D-coded
	22...26 VDC	22...26 VDC	22...26 VDC	22...26 VDC	22...26 VDC
	-10...55 °C	-10...55 °C	-10...55 °C	-10...55 °C	-10...55 °C
	CE, cULus	CE, cULus	CE, cULus	CE, cULus	CE, cULus
	IP54	IP54	IP54	IP54	IP54
	Page 518	Page 518	Page 518	Page 518	Page 518

Do you need more details? Our Product Finder at www.balluff.com provides you with product-specific information, including technical drawings, data sheets, user guides and more for each individual product. All items are available for download.

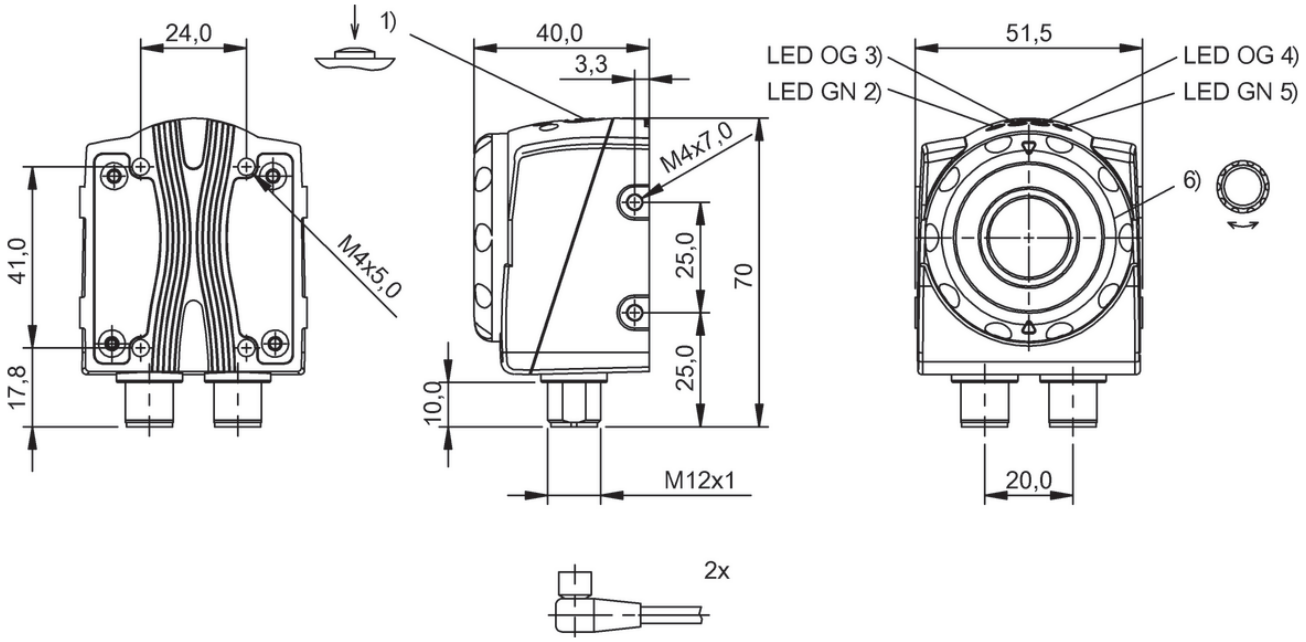

1) Teach-in reference image, 2) Operating voltage, 3) Output 1 active, 4) Output 2 active, 5) Connection with PC, 6) Focus

BVS001F, BVS001H, BVS001J, BVS001K, BVS001L, BVS001M, BVS001N, BVS001P

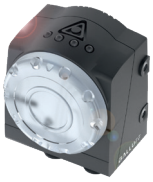
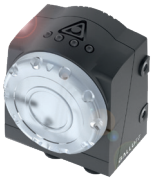
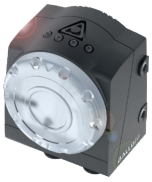

	BVS0016 BVS OI-3-155-E	BVS0015 BVS OI-3-151-E	BVS0017 BVS OI-3-153-E
Sensor type Vision	CMOS image sensor black-white	CMOS image sensor black-white	CMOS image sensor black-white
Image resolution	VGA 640 x 480 pixels	VGA 640 x 480 pixels	VGA 640 x 480 pixels
Detection rate typ.	3…50 Hz	3…50 Hz	3…50 Hz
Application	360° detection	360° detection	360° detection
Range	50...1000 mm	50...1000 mm	50...1000 mm
Field of view	34 x 25 mm ... 676 x 507 mm	24 x 18 mm ... 480 x 360 mm	16 x 12 mm ... 320 x 240 mm
Focal length	6.0 mm	8.0 mm	12.0 mm
Light type	Infrared	Infrared	Infrared
Housing material	Aluminum, die-cast ABS	Aluminum, die-cast ABS	Aluminum, die-cast ABS
Dimension	51.5 x 70 x 40 mm	51.5 x 70 x 40 mm	51.5 x 70 x 40 mm
Switching output	3x PNP normally open (NO)	3x PNP normally open (NO)	3x PNP normally open (NO)
Interface	Ethernet 10/100 Base T	Ethernet 10/100 Base T	Ethernet 10/100 Base T
Connection 1	M12x1-Male, 8-pole, A-coded	M12x1-Male, 8-pole, A-coded	M12x1-Male, 8-pole, A-coded
Connection 2	M12x1-Male, 4-pole, D-coded	M12x1-Male, 4-pole, D-coded	M12x1-Male, 4-pole, D-coded
Operating voltage Ub	22...26 VDC	22...26 VDC	22...26 VDC
Ambient temperature	-10...55 °C	-10...55 °C	-10...55 °C
Approval/Conformity	cULus, CE	cULus, CE	cULus, CE
Protection degree	IP54	IP54	IP54
Productview	Page 522	Page 522	Page 522

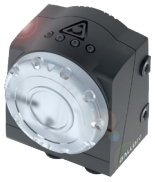
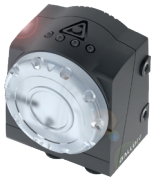
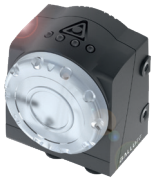
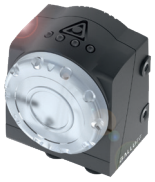
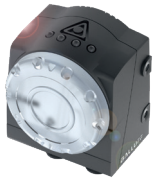

	BVS0018 BVS OI-3-157-E	BVS000L BVS OI-3-055-E	BVS000J BVS OI-3-051-E	BVS000K BVS OI-3-053-E	BVS000W BVS OI-3-057-E
	CMOS image sensor black-white	CMOS image sensor black-white	CMOS image sensor black-white	CMOS image sensor black-white	CMOS image sensor black-white
	VGA 640 x 480 pixels	VGA 640 x 480 pixels	VGA 640 x 480 pixels	VGA 640 x 480 pixels	VGA 640 x 480 pixels
	3…50 Hz	3…40 Hz	3…40 Hz	3…40 Hz	3…40 Hz
	360° detection	360° detection	360° detection	360° detection	360° detection
	180...1000 mm	50...1000 mm	50...1000 mm	50...1000 mm	180...1000 mm
	43 x 32 mm ... 240 x 180 mm	34 x 25 mm ... 676 x 507 mm	24 x 18 mm ... 480 x 360 mm	16 x 12 mm ... 320 x 240 mm	43 x 32 mm ... 240 x 180 mm
	16.0 mm	6.0 mm	8.0 mm	12.0 mm	16.0 mm
	Infrared	LED, red light	LED, red light	LED, red light	LED, red light
	Aluminum, die-cast ABS	Aluminum, die-cast ABS	Aluminum, die-cast ABS	Aluminum, die-cast ABS	Aluminum, die-cast ABS
	51.5 x 70 x 40 mm	51.5 x 70 x 40 mm	51.5 x 70 x 40 mm	51.5 x 70 x 40 mm	51.5 x 70 x 40 mm
	3x PNP normally open (NO)	3x PNP normally open (NO)	3x PNP normally open (NO)	3x PNP normally open (NO)	3x PNP normally open (NO)
	Ethernet 10/100 Base T	Ethernet 10/100 Base T	Ethernet 10/100 Base T	Ethernet 10/100 Base T	Ethernet 10/100 Base T
	M12x1-Male, 8-pole, A-coded	M12x1-Male, 8-pole, A-coded	M12x1-Male, 8-pole, A-coded	M12x1-Male, 8-pole, A-coded	M12x1-Male, 8-pole, A-coded
	M12x1-Male, 4-pole, D-coded	M12x1-Male, 4-pole, D-coded	M12x1-Male, 4-pole, D-coded	M12x1-Male, 4-pole, D-coded	M12x1-Male, 4-pole, D-coded
	22...26 VDC	22...26 VDC	22...26 VDC	22...26 VDC	22...26 VDC
	-10...55 °C	-10...55 °C	-10...55 °C	-10...55 °C	-10...55 °C
	cULus, CE	cULus, CE	cULus, CE	cULus, CE	CE, cULus
	IP54	IP54	IP54	IP54	IP54
	Page 522	Page 522	Page 522	Page 522	Page 522

Do you need more details? Our Product Finder at www.balluff.com provides you with product-specific information, including technical drawings, data sheets, user guides and more for each individual product. All items are available for download.

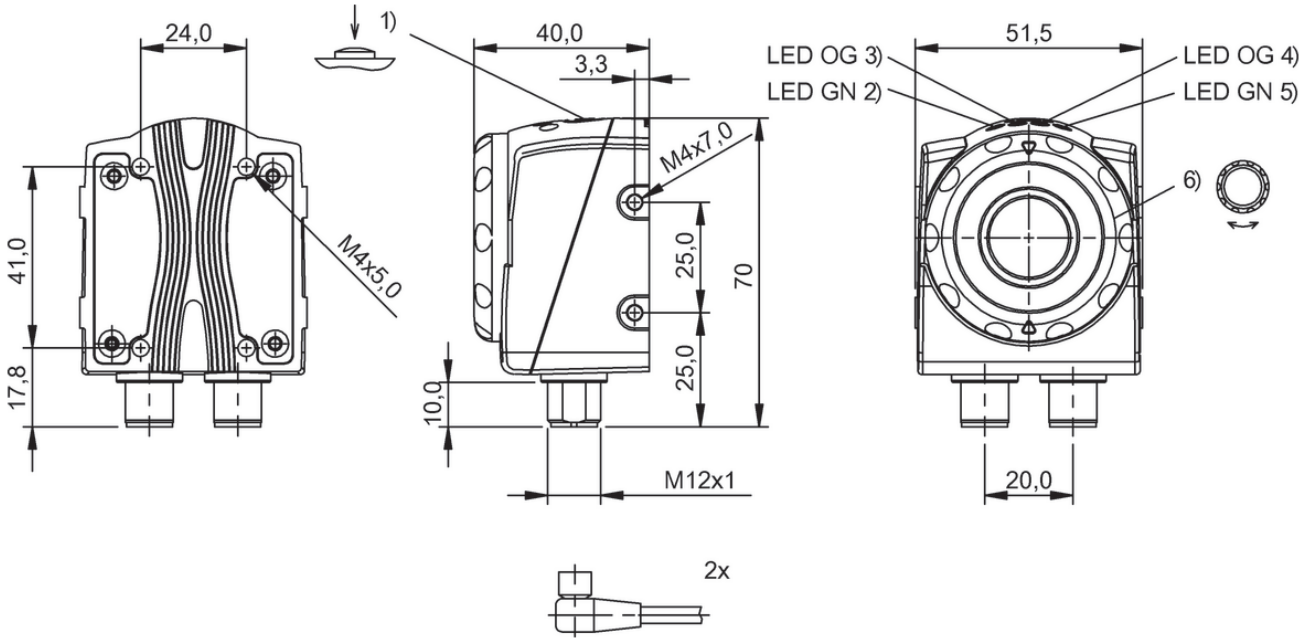

1) Teach-in reference image, 2) Operating voltage, 3) Output 1 active, 4) Output 2 active, 5) Connection with PC, 6) Focus

BVS0016, BVS0015, BVS0017, BVS0018, BVS000L, BVS000J, BVS000K, BVS000W

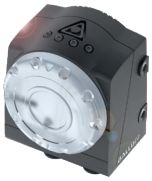

	BVS0013 BVS OI-3-105-E	
Sensor type Vision	CMOS image sensor black-white	
Image resolution	VGA 640 x 480 pixels	
Detection rate typ.	3…15 Hz	
Range	50...1000 mm	
Field of view	34 x 25 mm ... 676 x 507 mm	
Focal length	6.0 mm	
Light type	Infrared	
Housing material	Aluminum, die-cast ABS	
Dimension	51.5 x 70 x 40 mm	
Switching output	3x PNP normally open (NO)	
Interface	Ethernet 10/100 Base T	
Connection 1	M12x1-Male, 8-pole, A-coded	
Connection 2	M12x1-Male, 4-pole, D-coded	
Operating voltage Ub	22...26 VDC	
Ambient temperature	-10...55 °C	
Approval/Conformity	CE, cULus	
Protection degree	IP54	
Productview	Page 526	

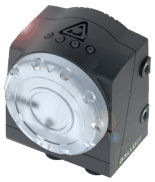

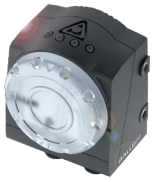

	BVS0014 BVS OI-3-101-E	BVS0012 BVS OI-3-103-E
	CMOS image sensor black-white	CMOS image sensor black-white
	VGA 640 x 480 pixels	VGA 640 x 480 pixels
	3…15 Hz	3…15 Hz
	50...1000 mm	50...1000 mm
	24 x 18 mm ... 480 x 360 mm	16 x 12 mm ... 320 x 240 mm
	8.0 mm	12.0 mm
	Infrared	Infrared
	Aluminum, die-cast ABS	Aluminum, die-cast ABS
	51.5 x 70 x 40 mm	51.5 x 70 x 40 mm
	3x PNP normally open (NO)	3x PNP normally open (NO)
	Ethernet 10/100 Base T	Ethernet 10/100 Base T
	M12x1-Male, 8-pole, A-coded	M12x1-Male, 8-pole, A-coded
	M12x1-Male, 4-pole, D-coded	M12x1-Male, 4-pole, D-coded
	22...26 VDC	22...26 VDC
	-10...55 °C	-10...55 °C
	cULus, CE	cULus, CE
	IP54	IP54
	Page 526	Page 526

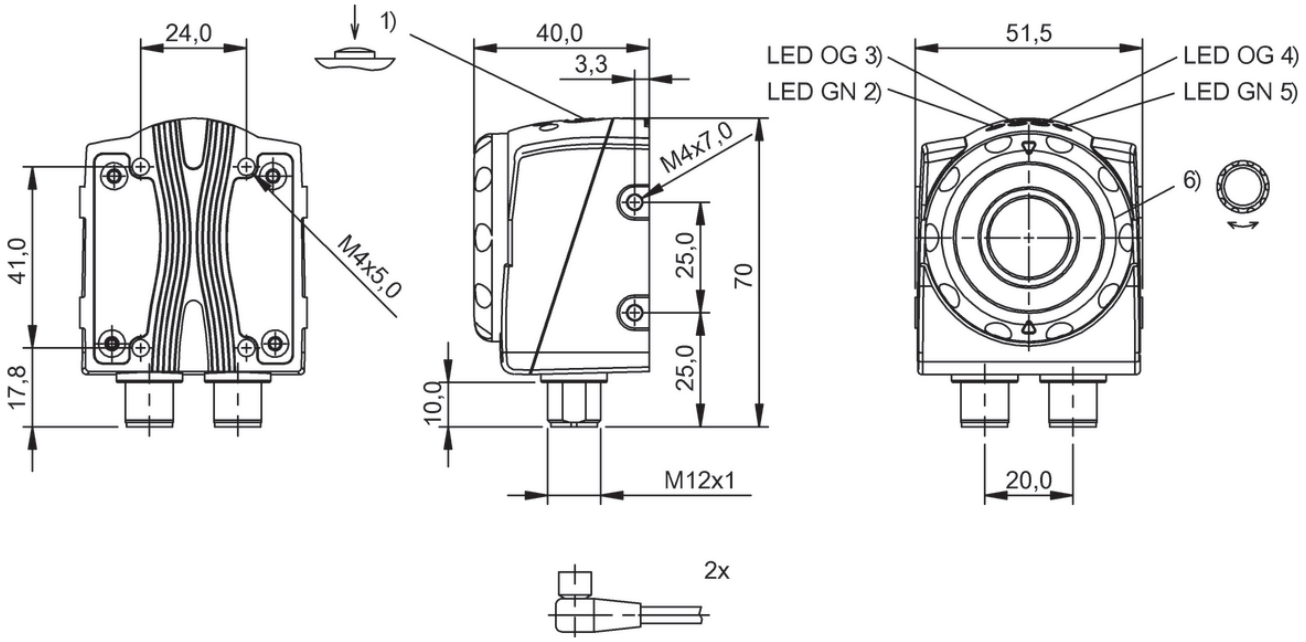

1) Teach-in reference image, 2) Operating voltage, 3) Output 1 active, 4) Output 2 active, 5) Connection with PC, 6) Focus

BVS0013, BVS0014, BVS0012

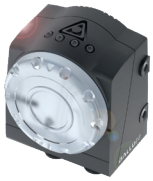

	BVS000E BVS OI-3-005-E	
Sensor type Vision	CMOS image sensor black-white	
Image resolution	VGA 640 x 480 pixels	
Detection rate typ.	3…15 Hz	
Range	50...1000 mm	
Field of view	34 x 25 mm ... 676 x 507 mm	
Focal length	6.0 mm	
Light type	LED, red light	
Housing material	Aluminum, die-cast ABS	
Dimension	51.5 x 70 x 40 mm	
Switching output	3x PNP normally open (NO)	
Interface	Ethernet 10/100 Base T	
Connection 1	M12x1-Male, 8-pole, A-coded	
Connection 2	M12x1-Male, 4-pole, D-coded	
Operating voltage Ub	22...26 VDC	
Ambient temperature	-10...55 °C	
Approval/Conformity	cULus, CE	
Protection degree	IP54	
Productview	Page 530	

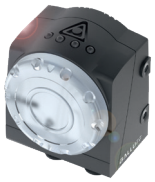

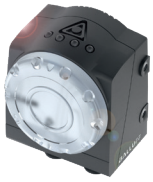

	BVS0003 BVS OI-3-001-E	BVS0005 BVS OI-3-003-E
	CMOS image sensor black-white	CMOS image sensor black-white
	VGA 640 x 480 pixels	VGA 640 x 480 pixels
	3…15 Hz	3…15 Hz
	50...1000 mm	50...1000 mm
	24 x 18 mm ... 480 x 360 mm	16 x 12 mm ... 320 x 240 mm
	8.0 mm	12.0 mm
	LED, red light	LED, red light
	Aluminum, die-cast ABS	Aluminum, die-cast ABS
	51.5 x 70 x 40 mm	51.5 x 70 x 40 mm
	3x PNP normally open (NO)	3x PNP normally open (NO)
	Ethernet 10/100 Base T	Ethernet 10/100 Base T
	M12x1-Male, 8-pole, A-coded	M12x1-Male, 8-pole, A-coded
	M12x1-Male, 4-pole, D-coded	M12x1-Male, 4-pole, D-coded
	22...26 VDC	22...26 VDC
	-10...55 °C	-10...55 °C
	cULus, CE	cULus, CE
	IP54	IP54
	Page 530	Page 530

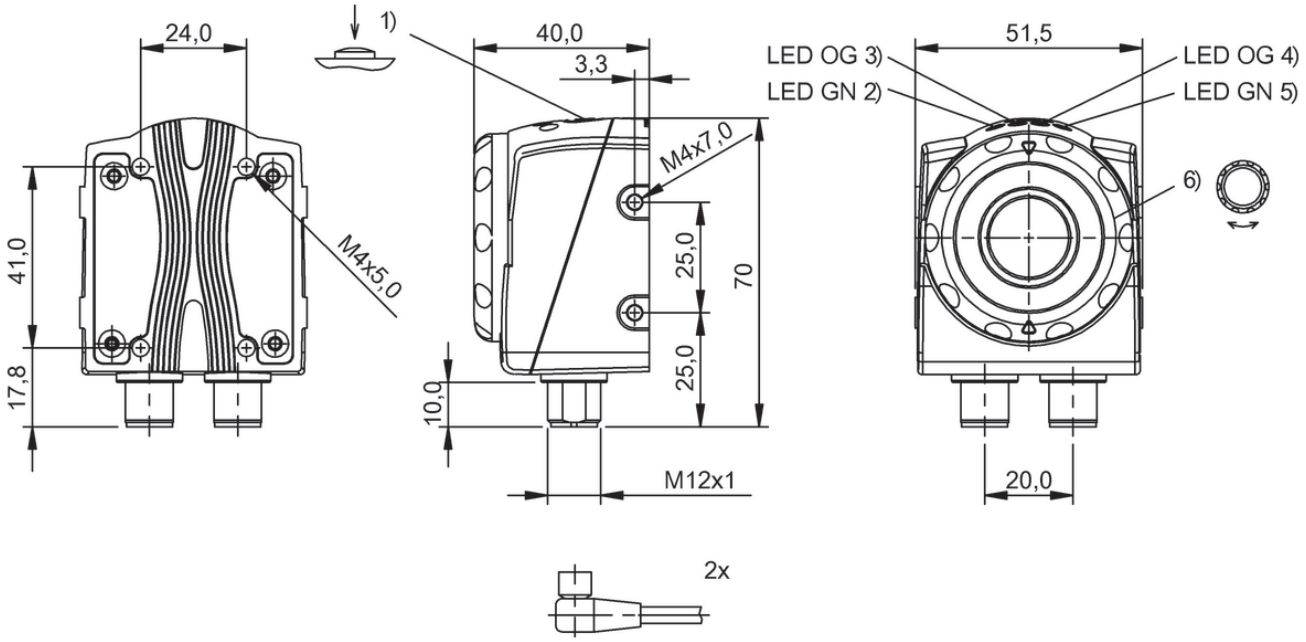

1) Teach-in reference image, 2) Operating voltage, 3) Output 1 active, 4) Output 2 active, 5) Connection with PC, 6) Focus

BVS000E, BVS0003, BVS0005

Secure identification and decoding of objects

OPTICAL IDENTIFICATION

Machine Vision from Balluff ensures quality and flexibility in modern production facilities. Through the use of industrial image processing, they provide reliable defect detection and thereby ensure exact quality control. All functions of the sensors can be flexibly combined.

You can also assemble your vision solution online to ensure that it precisely fits your requirements. Use the intuitive Machine Vision Configurator on our web site.

Features

- High cost-effectiveness and potential for cost reduction
- Less scrap thanks to early defect detection
- High system up-time when changing batches
- Machine Vision Configurator

	BVS001Z BVS HS-PB-DPW-MZ-01	
Drop protection	≥ 50 drops, 2.0 m on concrete	
Barcodes	GS1 Databar linear codes UPC/EAN (A, E, 13, 8) UPC/EAN with P2/ P5 Addons UPC/ EAN Coupons ISBN Code128 EAN128 ISBT128 Code39 Code39 Full ASCII Code39 CIP Code 32 Codabar Interleaved 2 of 5 IATA Industrial 2 of 5 standard 2 of 5 Code11 MSI Plessey Code 93 Follet 2/5	
2D codes	Aztec Code, China Han Xin Code, China Sensible Code, Data Matrix, Maxicode, Micro QR Code, QR code	
Stacked codes	Micro PDF417, Macro PDF, GS1 DataBar Stacked, GS1 DataBar Expanded Stacked, PDF417, GS1 DataBar Stacked Omnidir, GS1 DataBar Composites, EAN/JAN Composites, UPC A/E Composites	
Read distance	Datamatrix: 2…10.5 cm at 10 mil, Datamatrix: 2.6…5.2 cm at 4 mil, Code 39: 1.2…9.0 cm at 5 mil, Code 39: 2.5…7.8 cm at 2.5 mil	
Light type illumination	LED White light	
Interface	Bluetooth 2.0 (2.4 GHz)	
Protection degree	IP65	
Productview	Page 536	

	BVS001Y BVS HS-PB-HDW-MZ-01	BVS001T BVS HS-PC-DPW-MA-01	BVS001U BVS HS-PC-HDW-MA-01
	≥ 50 drops, 2.0 m on concrete	≥ 50 drops, 2.0 m on concrete	≥ 50 drops, 2.0 m on concrete
	GS1 Databar linear codes UPC/EAN (A, E, 13, 8) UPC/EAN with P2/ P5 Addons UPC/ EAN Coupons ISBN Code128 EAN128 ISBT128 Code39 Code39 Full ASCII Code39 CIP Code 32 Codabar Interleaved 2 of 5 IATA Industrial 2 of 5 standard 2 of 5 Code11 MSI Plessey Code 93 Follet 2/5	GS1 Databar linear codes UPC/EAN (A, E, 13, 8) UPC/EAN with P2/ P5 Addons UPC/ EAN Coupons ISBN Code128 EAN128 ISBT128 Code39 Code39 Full ASCII Code39 CIP Code 32 Codabar Interleaved 2 of 5 IATA Industrial 2 of 5 standard 2 of 5 Code11 MSI Plessey Code 93 Follet 2/5	GS1 Databar linear codes UPC/EAN (A, E, 13, 8) UPC/EAN with P2/ P5 Addons UPC/ EAN Coupons ISBN Code128 EAN128 ISBT128 Code39 Code39 Full ASCII Code39 CIP Code 32 Codabar Interleaved 2 of 5 IATA Industrial 2 of 5 standard 2 of 5 Code11 MSI Plessey Code 93 Follet 2/5
	Aztec Code, China Han Xin Code, China Sensible Code, Data Matrix, Maxicode, Micro QR Code, QR code	Aztec Code, China Sensible Code, Data Matrix, Maxicode, Micro QR Code, QR code	Aztec Code, China Sensible Code, Data Matrix, Maxicode, Micro QR Code, QR code
	GS1 DataBar Expanded Stacked, GS1 DataBar Stacked Omnidir, GS1 DataBar Stacked, Macro PDF, GS1 DataBar Composites, EAN/JAN Composites, Micro PDF417, UPC A/E Composites, PDF417	PDF417, Macro PDF, GS1 DataBar Stacked Omnidir, GS1 DataBar Composites, GS1 DataBar Stacked, GS1 DataBar Expanded Stacked, Micro PDF417, UPC A/E Composites, EAN/JAN Composites	Micro PDF417, GS1 DataBar Composites, Macro PDF, GS1 DataBar Stacked, GS1 DataBar Expanded Stacked, GS1 DataBar Stacked Omnidir, PDF417
	Datamatrix: 2…20 cm at 10 mil, Datamatrix: 2…6 cm at 4 mil, Code 39: 3…110 cm at 40 mil, Code 39: 2…6 cm at 2.5 mil	Datamatrix: 2…10.5 cm at 10 mil, Code 39: 2.5…7.8 cm at 2.5 mil, Code 39: 1.2…9.0 cm at 5 mil, Datamatrix: 2.6…5.2 cm at 4 mil	Code 39: 2…6 cm at 2.5 mil, Code 39: 3…110 cm at 40 mil, Datamatrix: 2…6 cm at 4 mil, Datamatrix: 2…20 cm at 10 mil
	LED White light	LED White light	LED White light
	Bluetooth 2.0 (2.4 GHz)	RS232/ USB	RS232/ USB
	IP65	IP65	IP65
	Page 536	Page 536	Page 536

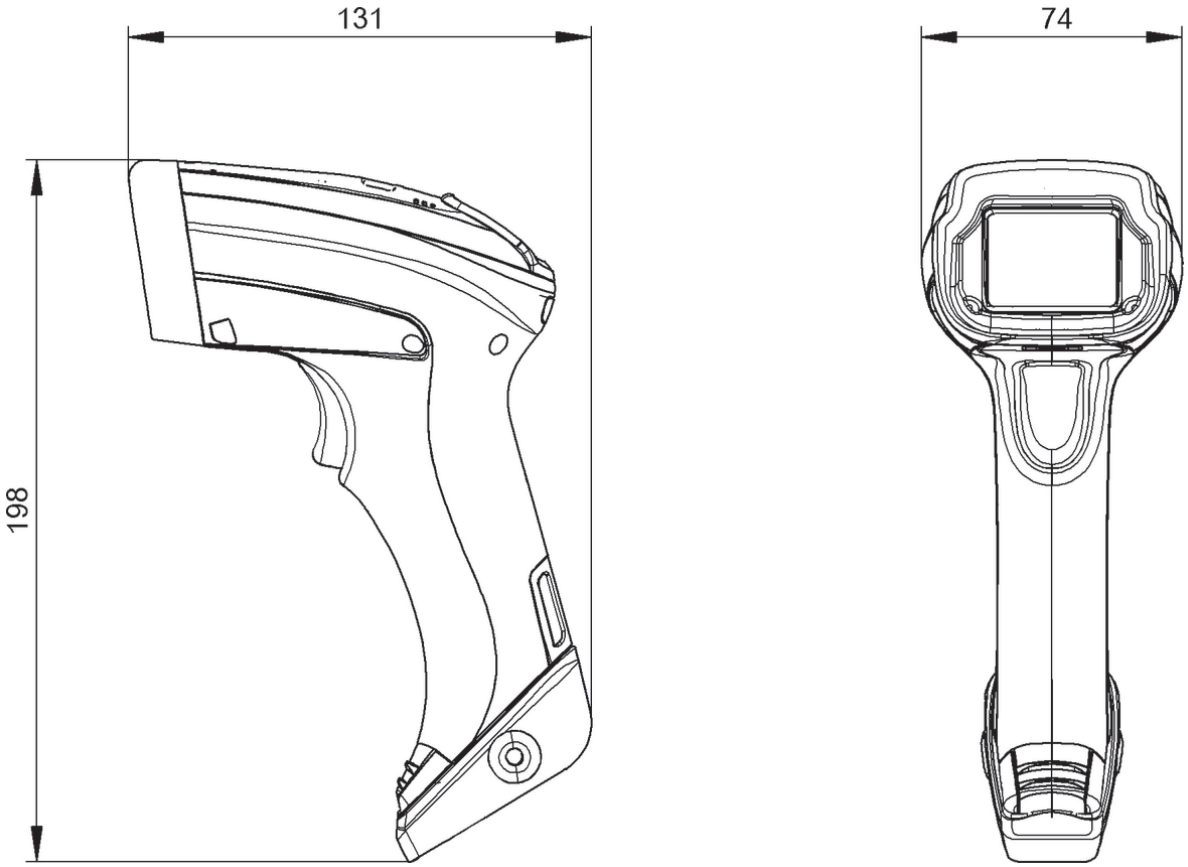

BVS001Z, BVS001Y

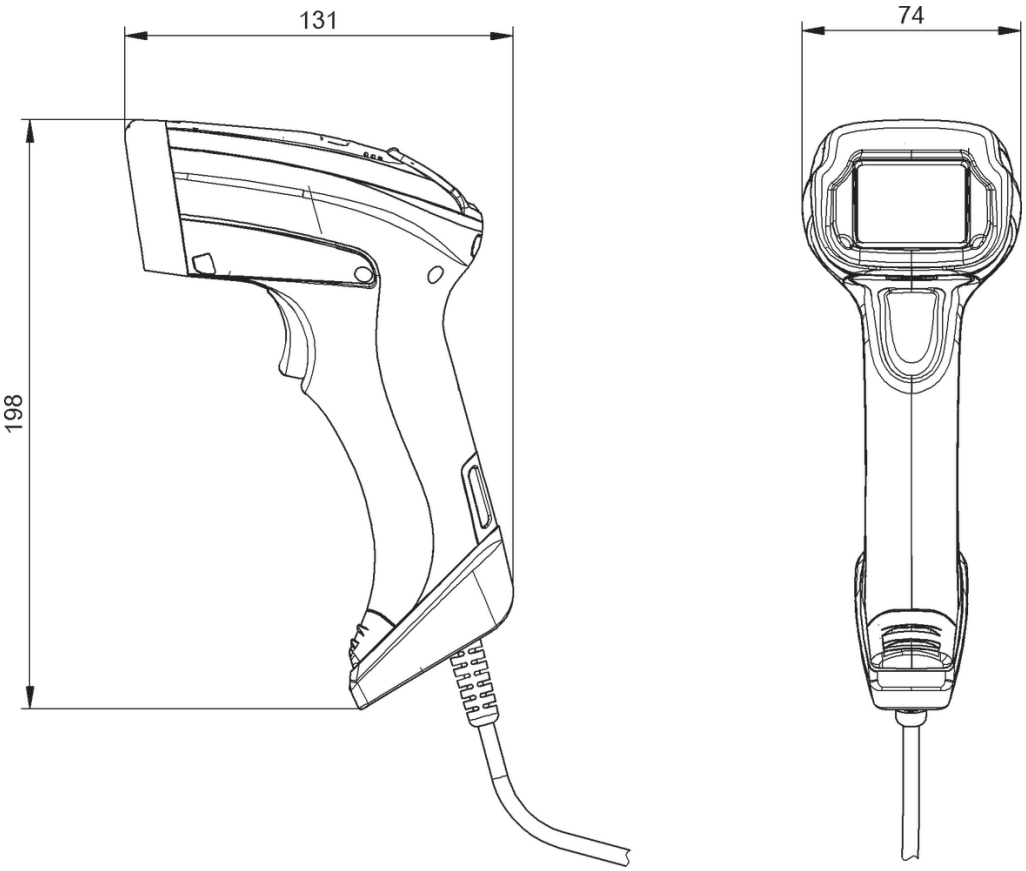

BVS001T, BVS001U

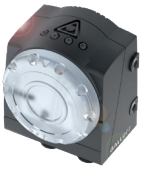
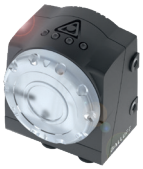
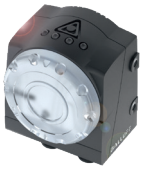

	BVS001C BVS ID-3-105-E	**BVS0019** BVS ID-3-101-E	**BVS001A** BVS ID-3-103-E
Barcodes	Interleaved 2-of-5,Code 39, Code 128, Pharma-code,Codabar, EAN 8, EAN 13, UPC-E, UPC-A	Interleaved 2-of-5,Code 39, Code 128, Pharma-code,Codabar, EAN 8, EAN 13, UPC-E, UPC-A	Interleaved 2-of-5,Code 39, Code 128, Pharma-code,Codabar, EAN 8, EAN 13, UPC-E, UPC-A
2D codes	Data Matrix ECC 200, QR code, Mini QR	Data Matrix ECC 200, QR code, Mini QR	Data Matrix ECC 200, QR code, Mini QR
Stacked codes	PDF417	PDF417	PDF417
Application	Multi-Code-Reading, Verifying character strings	Multi-Code-Reading, Verifying character strings	Multi-Code-Reading, Verifying character strings
Image resolution	VGA 640 x 480 pixels	VGA 640 x 480 pixels	VGA 640 x 480 pixels
Sensor type Vision	CMOS image sensor black-white	CMOS image sensor black-white	CMOS image sensor black-white
Range	50...1000 mm	50...1000 mm	50...1000 mm
Field of view	34 x 25 mm ... 676 x 507 mm	24 x 18 mm ... 480 x 360 mm	16 x 12 mm ... 320 x 240 mm
Focal length	6.0 mm	8.0 mm	12.0 mm
Light type	Infrared	Infrared	Infrared
Housing material	Aluminum, die-cast ABS	Aluminum, die-cast ABS	Aluminum, die-cast ABS
Dimension	51.5 x 70 x 40 mm	51.5 x 70 x 40 mm	51.5 x 70 x 40 mm
Switching output	3x PNP normally open (NO)	3x PNP normally open (NO)	3x PNP normally open (NO)
Interface	Ethernet 10/100 Base T, RS232 (9.6...115.2 kBaud)	Ethernet 10/100 Base T, RS232 (9.6...115.2 kBaud)	Ethernet 10/100 Base T, RS232 (9.6...115.2 kBaud)
Connection 1	M12x1-Male, 8-pole, A-coded	M12x1-Male, 8-pole, A-coded	M12x1-Male, 8-pole, A-coded
Connection 2	M12x1-Male, 4-pole, D-coded	M12x1-Male, 4-pole, D-coded	M12x1-Male, 4-pole, D-coded
Operating voltage Ub	22...26 VDC	22...26 VDC	22...26 VDC
Ambient temperature	-10...55 °C	-10...55 °C	-10...55 °C
Approval/Conformity	cULus, CE	cULus, CE	cULus, CE
Protection degree	IP54	IP54	IP54
Productview	Page 540	Page 540	Page 540

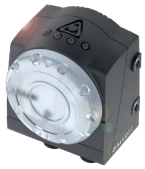
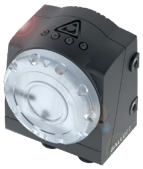
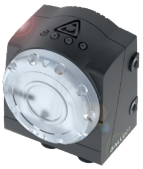
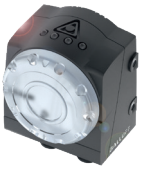

BVS001R BVS ID-3-005-E	BVS0001 BVS ID-3-001-E	BVS000T BVS ID-3-003-E	BVS000Y BVS ID-3-007-E
Interleaved 2-of-5,Code 39, Code 128, Pharma-code,Codabar, EAN 8, EAN 13, UPC-E, UPC-A	Interleaved 2-of-5,Code 39, Code 128, Pharma-code,Codabar, EAN 8, EAN 13, UPC-E, UPC-A	Interleaved 2-of-5,Code 39, Code 128, Pharma-code,Codabar, EAN 8, EAN 13, UPC-E, UPC-A	Interleaved 2-of-5,Code 39, Code 128, Pharma-code,Codabar, EAN 8, EAN 13, UPC-E, UPC-A
Data Matrix ECC 200, QR code, Mini QR	Data Matrix ECC 200, QR code, Mini QR	Data Matrix ECC 200, QR code, Mini QR	Data Matrix ECC 200, QR code, Mini QR
PDF417	PDF417	PDF417	PDF417
Multi-Code-Reading, Verifying character strings	Multi-Code-Reading, Verifying character strings	Multi-Code-Reading, Verifying character strings	Multi-Code-Reading, Verifying character strings
VGA 640 x 480 pixels	VGA 640 x 480 pixels	VGA 640 x 480 pixels	VGA 640 x 480 pixels
CMOS image sensor black-white	CMOS image sensor black-white	CMOS image sensor black-white	CMOS image sensor black-white
50...1000 mm	50...1000 mm	50...1000 mm	150...1000 mm
34 x 25 mm ... 676 x 507 mm	24 x 18 mm ... 480 x 360 mm	16 x 12 mm ... 320 x 240 mm	43 x 32 mm ... 240 x 180 mm
6.0 mm	8.0 mm	12.0 mm	16.0 mm
LED, red light	LED, red light	LED, red light	LED, red light
Aluminum, die-cast ABS	Aluminum, die-cast ABS	Aluminum, die-cast ABS	Aluminum, die-cast ABS
51.5 x 70 x 40 mm	51.5 x 70 x 40 mm	51.5 x 70 x 40 mm	51.5 x 70 x 40 mm
3x PNP normally open (NO)	3x PNP normally open (NO)	3x PNP normally open (NO)	3x PNP normally open (NO)
RS232 (9.6...115.2 kBaud), RS232 (9.6...115.2 kBaud)	Ethernet 10/100 Base T, RS232 (9.6...115.2 kBaud)	Ethernet 10/100 Base T, RS232 (9.6...115.2 kBaud)	Ethernet 10/100 Base T, RS232 (9.6...115.2 kBaud)
M12x1-Male, 8-pole, A-coded	M12x1-Male, 8-pole, A-coded	M12x1-Male, 8-pole, A-coded	M12x1-Male, 8-pole, A-coded
M12x1-Male, 4-pole, D-coded	M12x1-Male, 4-pole, D-coded	M12x1-Male, 4-pole, D-coded	M12x1-Male, 4-pole, D-coded
22...26 VDC	22...26 VDC	22...26 VDC	22...26 VDC
-10...55 °C	-10...55 °C	-10...55 °C	-10...55 °C
CE, cULus	cULus, CE	CE, cULus	CE, cULus
IP54	IP54	IP54	IP54
Page 540	Page 540	Page 540	Page 540

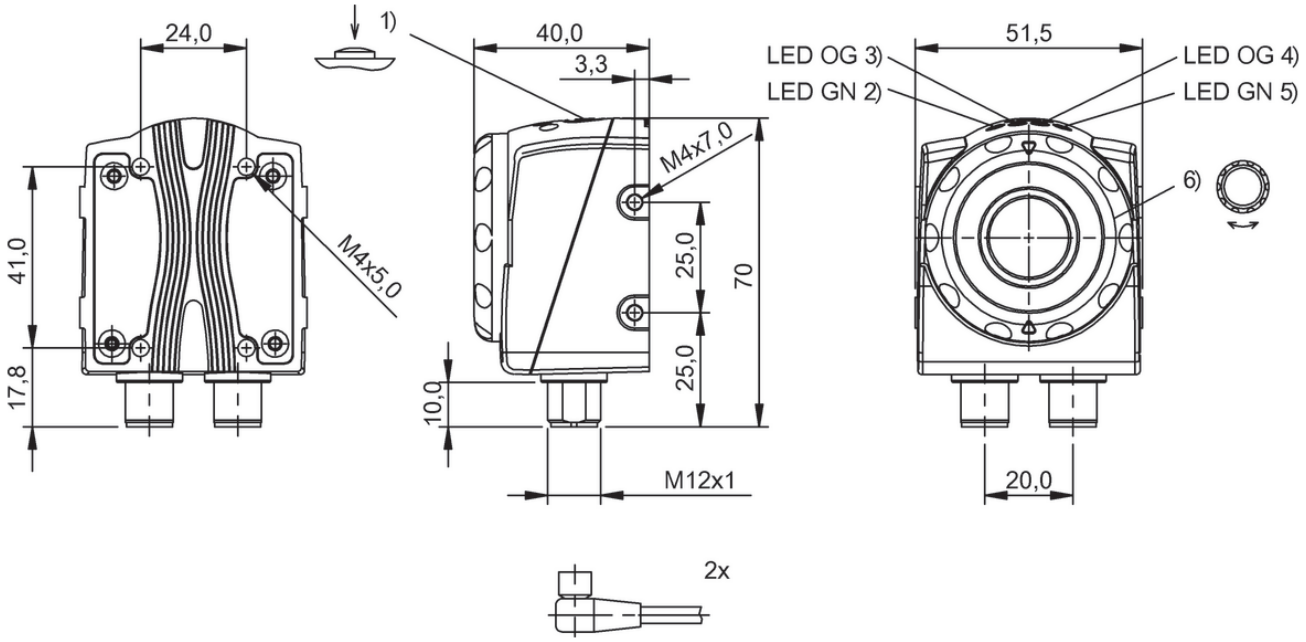

1) Teach-in reference image, 2) Operating voltage, 3) Output 1 active, 4) Output 2 active, 5) Connection with PC, 6) Focus

BVS001C, BVS0019, BVS001A, BVS001R, BVS0001, BVS000T, BVS000Y

Machine Vision and Optical Identification

BASICS AND GLOSSARY

auslöst. Diese
eit im Alarmbereich

Working distance

Working distance describes the distance between camera and sharply focused object in the image. Any given lens has a minimum and maximum working distance. Objects placed closer to the camera than the minimum working distance or farther than the maximum working distance can no longer be brought to focus in the image.

Flange focal distance

Distance between the lens and the image sensor in a camera.

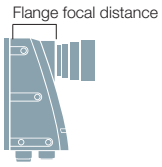

Resolution (image processing)

Number of image points (pixels) on an image sensor.

Evaluation region

Image area which is evaluated by a camera or vision sensor.

Image processing

Technology which deals with image capture and evaluation.

Aperture

Opening in a camera through which the light enters. Closing the aperture causes a darker image. The wider the aperture opening, the lighter the image.

Focal length

Distance between an optical lens and the focal point in millimeters. This distance together with the reading distance/working distance defines the reading field/field of view of a camera or visual sensor.

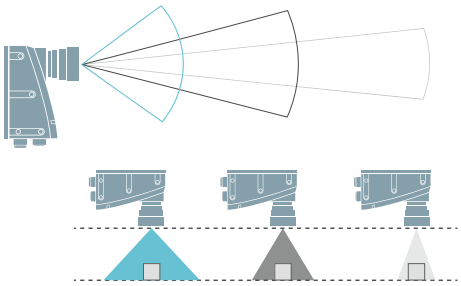

Focus	The clear and sharply defined condition of an image.
Maximum frame rate	Expressed in frames per second, the maximum possible number of images which a camera can capture
Inspection	Sequence of a test protocol in the environment of use.
Inspection program	Test protocol which is stored in image processing systems. The inspection program includes, for example, a learned reference image, the tools which test one or more evaluation areas in the digital image of an object, and the functions associated with the digital outputs.
Readable code	Type of barcode which a camera/vision sensor can read and evaluate.
Reading distance (optical identification)	Maximum distance at which the camera/vision sensor/code reader can reliably read a code of a certain size.
Lens	Optical system that forms an image on an image sensor from the rays of light passing through it. We distinguish lenses by their construction (C-mount, S-mount, liquid lens) and focal length (6 mm, 8 mm etc.).
Pixel	Smallest element of a digital image generated by an image sensor. The larger the number of pixels, the finer and sharper the image resolution.
Pixel size	The physical size of a pixel on an image sensor expressed in micrometers.
PEO (power over Ethernet)	Standardized procedure by which cameras are powered over a network cable.

Depth of field

Area in front of and behind the working distance in which an object is still sharply represented. It is dependent on the focal length of the lens, the current working distance, and the set f-stop.

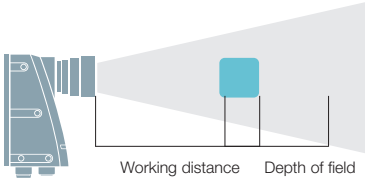

Field of view

Size of the image surface within which an image-processing device can undertake and process an image or event. The size is dependent upon the focal length of the lens and the working/reading distance.

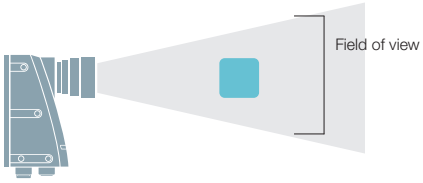

Trigger

Initiator of an event such as an inspection in a camera/vision sensor.

Distortion

Optical effects of lenses which can have different reactions on the processing.
Two common types of distortion are pincushion and barrel distortion.

All the information you need at a glance

HUMAN MACHINE INTERFACES

innovating automation

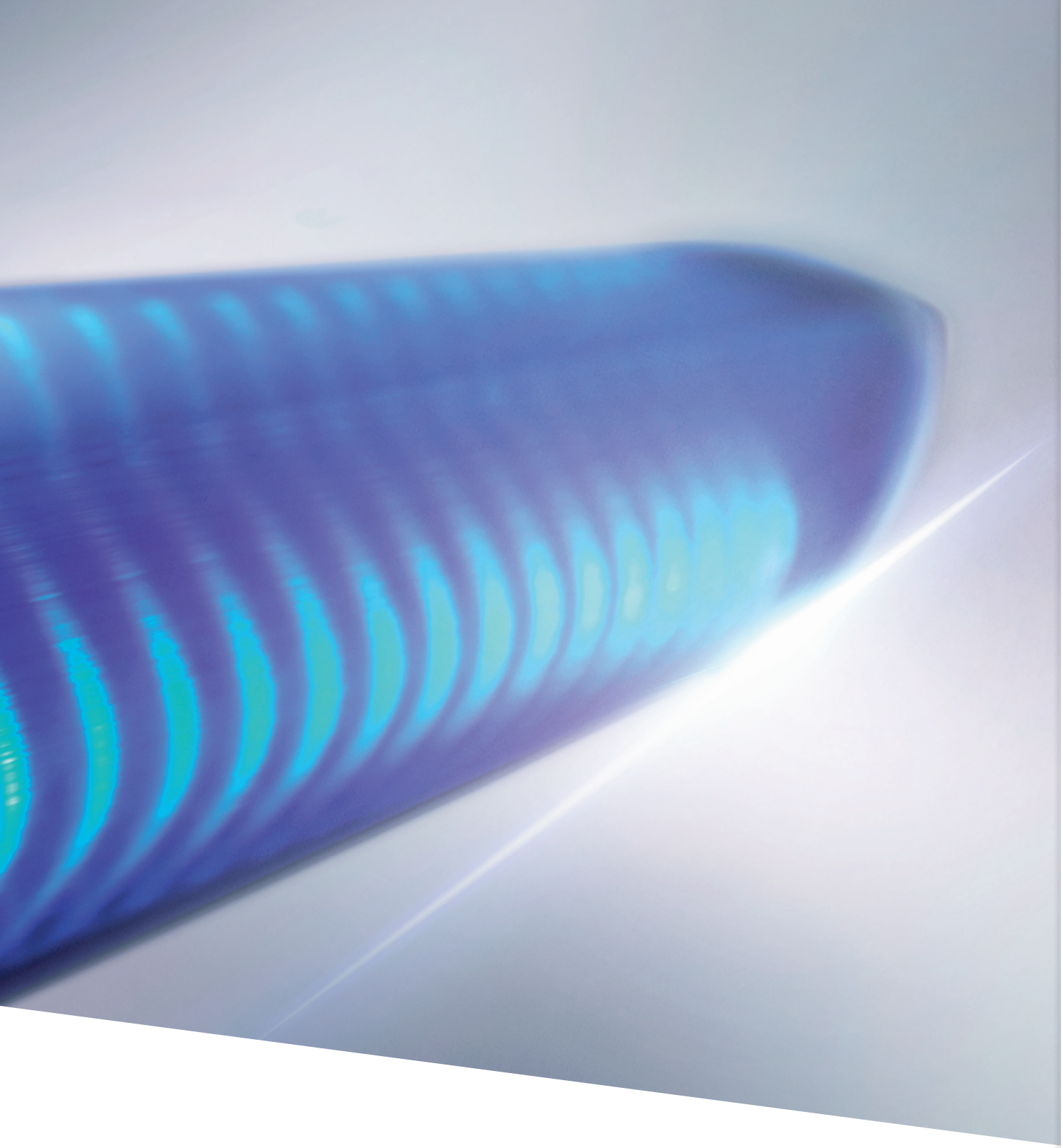

With our signaling and display devices, you know at all times what/where things stand with production and exactly where a tool is located.
You can reliably monitor the state of machines and systems and display the sensor output signals.

Your Balluff solutions

- Signaling and display devices
- Monitors
- Displays

Capture operating status with displays and SmartLight

SIGNALING AND DISPLAY DEVICES

Our displays and the SmartLight LED stack light display physical variables. They allow you to know the operating status of your machine at a glance. The displays give you the choice between analog, SSI and pulse inputs. The SmartLight visualizes progressions and trends, with the special advantage that you can correlate different colors and modes without any mechanical modifications. Through the IO-Link interface, it is easy to install and configure.

The most important benefits

- Flexible
- Easy to install
- Displays for analog, SSI or pulse input signal
- SmartLight with IO-Link and individually correlated colors and modes

SmartLight – LED stack lights	552
Displays	560
Touchpanel PC	566

	BNI007T BNI IOL-800-000-Z036	BNI0087 BNI IOL-800-000-Z037	BNI007F BNI IOL-801-000-Z036	
Principle of operation	Indicator light	Indicator light with sound module	Indicator light	
Interface	IO-Link 1.1	IO-Link 1.1	IO-Link 1.1	
Operating voltage Ub	18...30.2 VDC	18...30.2 VDC	18...30.2 VDC	
Connection	M12x1 connector, 4-pin	M12x1 connector, 4-pin	M12x1 connector, 4-pin	
Segments, number max.	1	1	3	
Predefined colors	Yellow, white, Green, Blue, Red, Orange, configurable	Yellow, white, Green, Blue, Red, Orange, configurable	Yellow, white, Green, Blue, Red, Orange, configurable	
Function indicator	Runlight Mode, Segment Mode, Flexi-Mode	Runlight Mode, Segment Mode, Flexi-Mode	Runlight Mode, Level Mode, Segment Mode, Flexi-Mode	
Volume max.	—	95 dB/m	—	
Setting	Function indicator	Function indicator, Volume	Function indicator	
Additional function	—	—	—	
Dimension	60 x 60 x 117 mm	60 x 60 x 138.5 mm	60 x 60 x 213 mm	
Housing material	PC, Transparent Die-cast zinc	PC, Transparent Die-cast zinc	PC, Transparent Die-cast zinc	
Mounting	Screws M18	Screws M18	Screws M18	
Ambient temperature	-5...50 °C	-5...50 °C	-5...50 °C	
Protection degree	IP65	IP30	IP65	
Transfer rate	COM2 (38.4 kBaud)	COM2 (38.4 kBaud)	COM2 (38.4 kBaud)	
Process data cycle min.	5 ms	5 ms	5 ms	
Process data in	—	—	—	
Process data out	1 bytes	1 bytes	2 bytes	
Productview	Page 556	Page 556	Page 557	

	BNI0088 BNI IOL-801-102-Z036	BNI0086 BNI IOL-801-000-Z037	BNI008A BNI IOL-801-102-Z037	BNI0072 BNI IOL-802-000-Z036	BNI0082 BNI IOL-802-102-Z036
	Indicator light	Indicator light with sound module	Indicator light with sound module	Indicator light	Indicator light
	IO-Link 1.1	IO-Link 1.1	IO-Link 1.1	IO-Link 1.1	IO-Link 1.1
	18...30.2 VDC	18...30.2 VDC	18...30.2 VDC	18...30.2 VDC	18...30.2 VDC
	M12x1 connector, 4-pin	M12x1 connector, 4-pin	M12x1 connector, 4-pin	M12x1 connector, 4-pin	M12x1 connector, 4-pin
	3	3	3	5	5
	Yellow, white, Green, Blue, Red, Orange, configurable	Yellow, white, Green, Blue, Red, Orange, configurable	Yellow, white, Green, Blue, Red, Orange, configurable	Yellow, white, Green, Blue, Red, Orange, configurable	Yellow, white, Green, Blue, Red, Orange, configurable
	Runlight Mode, Level Mode, Segment Mode, Flexi-Mode	Runlight Mode, Level Mode, Segment Mode, Flexi-Mode	Runlight Mode, Level Mode, Segment Mode, Flexi-Mode	Runlight Mode, Level Mode, Segment Mode, Flexi-Mode	Runlight Mode, Level Mode, Segment Mode, Flexi-Mode
	—	95 dB/m	95 dB/m	—	—
	Function indicator	Function indicator, Volume	Function indicator, Volume	Function indicator	Function indicator
	Expanded process data	—	Expanded process data	—	Expanded process data
	60 x 60 x 213 mm	60 x 60 x 234.5 mm	60 x 60 x 234.5 mm	60 x 60 x 309 mm	60 x 60 x 309 mm
	PC, Transparent Die-cast zinc	PC, Transparent Die-cast zinc	PC, Transparent Die-cast zinc	PC, Transparent Die-cast zinc	PC, Transparent Die-cast zinc
	Screws M18	Screws M18	Screws M18	Screws M18	Screws M18
	-5...50 °C	-5...50 °C	-5...50 °C	-5...50 °C	-5...50 °C
	IP65	IP30	IP30	IP65	IP65
	COM2 (38.4 kBaud)	COM2 (38.4 kBaud)	COM2 (38.4 kBaud)	COM2 (38.4 kBaud)	COM2 (38.4 kBaud)
	7.2 ms	5 ms	7.2 ms	5 ms	7.2 ms
	1 bytes	—	1 bytes	—	1 bytes
	8 bytes	3 bytes	8 bytes	3 bytes	8 bytes
	Page 557	Page 558	Page 557	Page 559	Page 558

	BNI0083 BNI IOL-802-000-Z037	BNI0085 BNI IOL-802-102-Z037		
Principle of operation	Indicator light with sound module	Indicator light with sound module		
Interface	IO-Link 1.1	IO-Link 1.1		
Operating voltage Ub	18...30.2 VDC	18...30.2 VDC		
Connection	M12x1 connector, 4-pin	M12x1 connector, 4-pin		
Segments, number max.	5	5		
Predefined colors	Yellow, white, Green, Blue, Red, Orange, configurable	Yellow, white, Green, Blue, Red, Orange, configurable		
Function indicator	Runlight Mode, Level Mode, Segment Mode, Flexi-Mode	Runlight Mode, Level Mode, Segment Mode, Flexi-Mode		
Volume max.	95 dB/m	95 dB/m		
Setting	Function indicator, Volume	Function indicator, Volume		
Additional function	—	Expanded process data		
Dimension	60 x 60 x 330.5 mm	60 x 60 x 330.5 mm		
Housing material	PC, Transparent Die-cast zinc	PC, Transparent Die-cast zinc		
Mounting	Screws M18	Screws M18		
Ambient temperature	-5...50 °C	-5...50 °C		
Protection degree	IP30	IP30		
Transfer rate	COM2 (38.4 kBaud)	COM2 (38.4 kBaud)		
Process data cycle min.	5 ms	7.2 ms		
Process data in	—	1 bytes		
Process data out	3 bytes	8 bytes		
Productview	Page 558	Page 558		

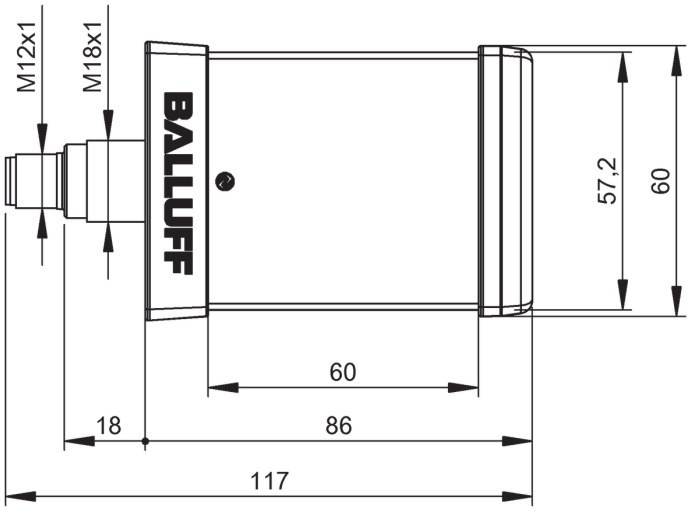

BNI007T

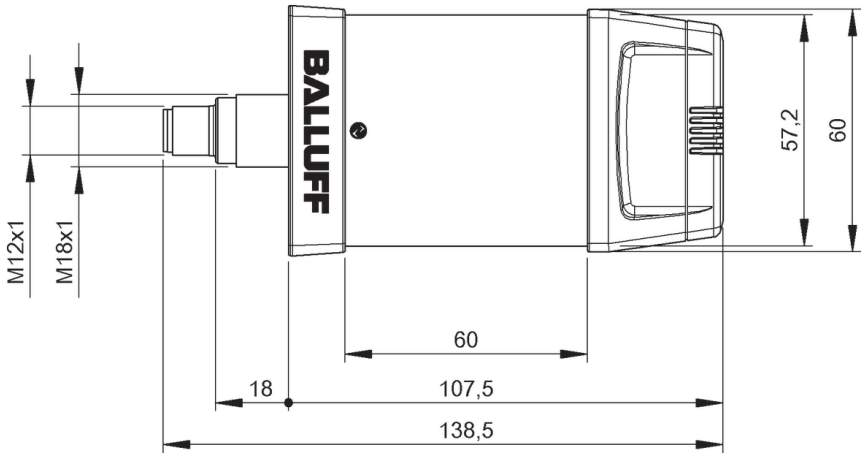

BNI0087

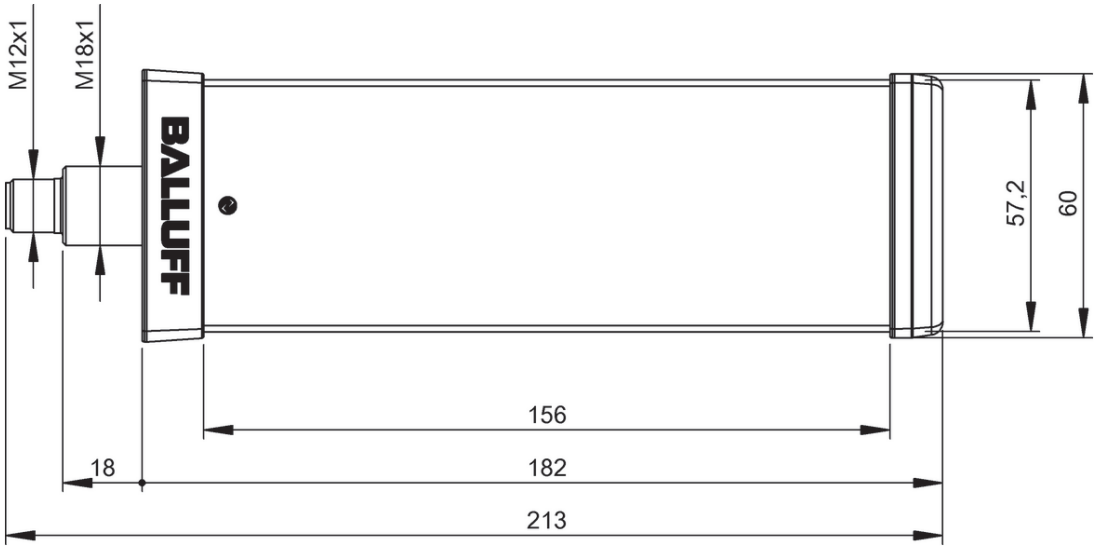

BNI007F, BNI0088

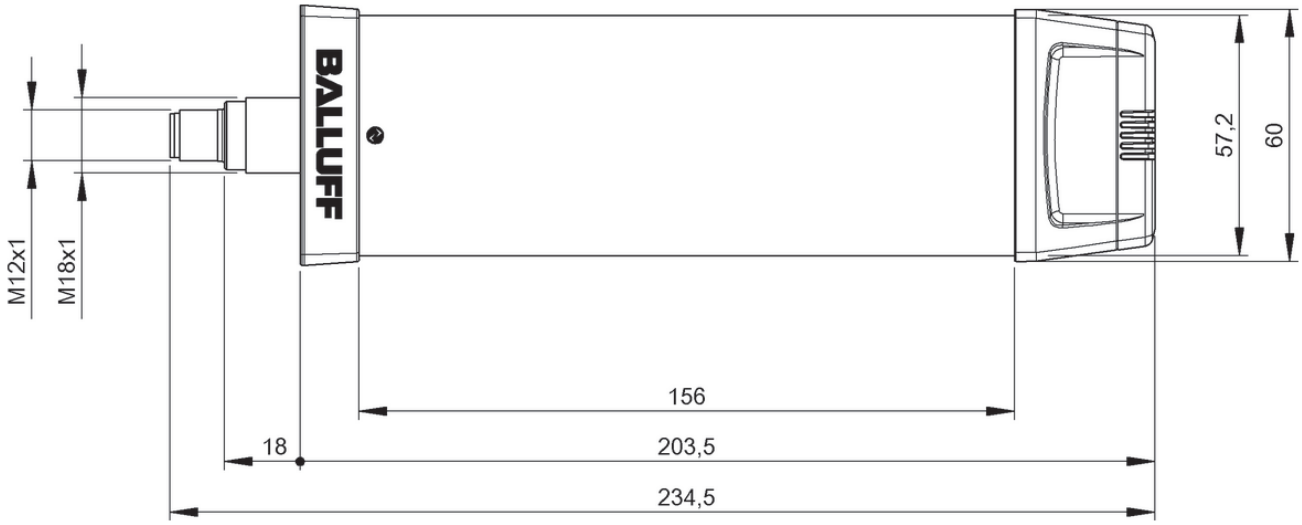

BNI0086, BNI008A

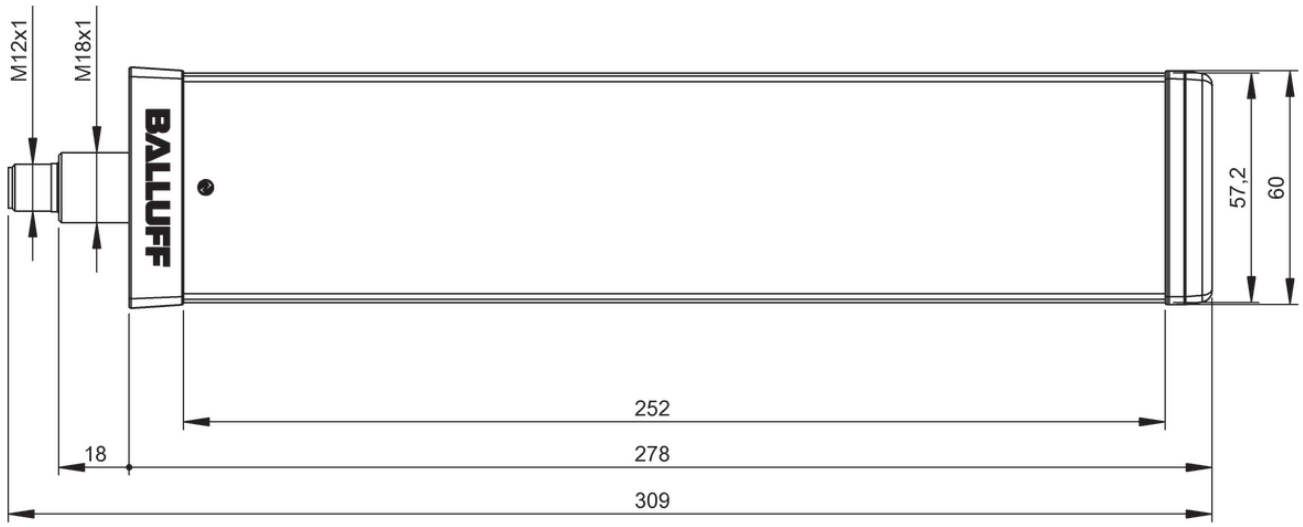

BNI0072, BNI0082

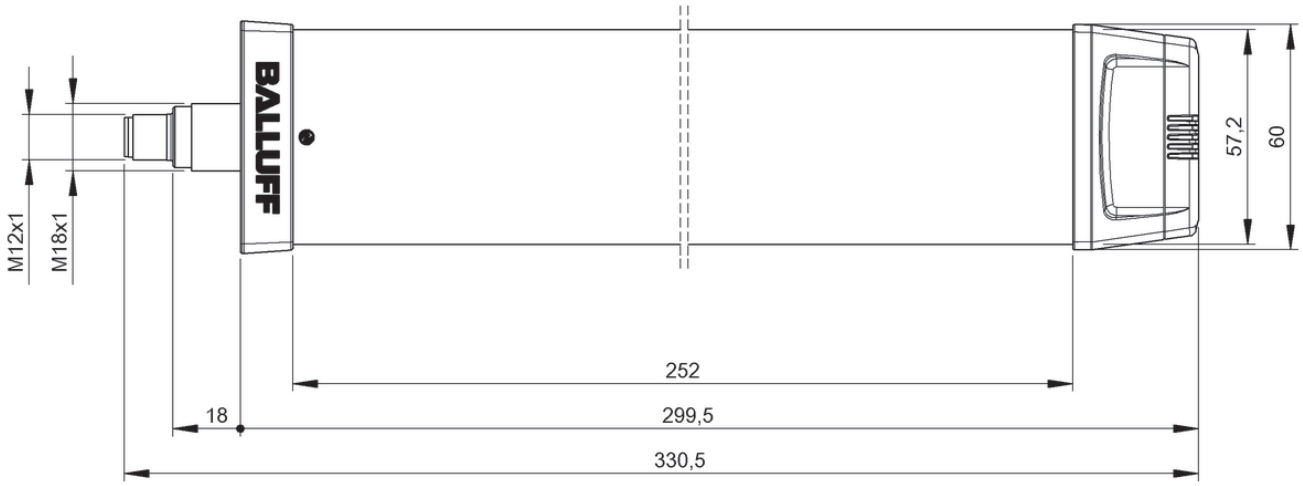

BNI0083, BNI0085

BNI00CZ, BNI00E0

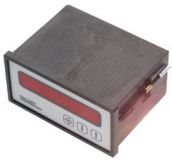
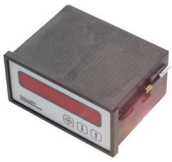

	BAE006K BDD-UM 3023	BAE0067 BDD-AM 10-1-P	BAE0069 BDD-AM 10-1-SSD
Function	Analog value display	display module	display module
Display	4 characters, red, LED 7-segment	7 1/2 characters, red, LED 7-segment	7 1/2 characters, red, LED 7-segment
Dimension	72 x 48 x 96 mm	112 x 72 x 144 mm	112 x 72 x 144 mm
Principle of operation	Display unit	Display unit	Display unit
Rated input voltage	18…36 V DC	10…32 V DC	10…32 V DC
Inputs, number	1	2	2
Analog inputs	Analog, voltage/ Analog, current (0…10 V/ 0…20 mA/4…20 mA)	—	—
Interface port 01	—	Digital pulse	SSI
Interface, note Port 01	—	—	—
Resolution	≤ 12 bits	—	—
Cycle time min.	200 ms	—	—
Digital outputs	—	2x Relay	2x Relay
Analog output	Analog, voltage/Analog, current	—	—
Rated output voltage DC	—	24 V	24 V
Output current max.	—	2 A	2 A
Encoder supply	—	5 V/24 V, max 300 mA	5 V/24 V, max 300 mA
Housing material primary	Plastic	Plastic	Plastic
Ambient temperature	0...60 °C	0...50 °C	0...50 °C
IP rating of housing front	IP54	IP64	IP64
Approval/Conformity	CE	CE	CE
Productview	Page 662	Page 662	Page 663

	BAE004H BDD 610-R3Q3-0-51-N-00	BAE004J BDD 610-R3Q3-0-53-N-00	BAE004K BDD 611-R3Q4-0-52-N-00	BAE00EH BAE PD-VS-002-E	
	Single-axis counter	Single-axis counter	Single-axis counter	Data transfer to/from PC, Manage user profiles, Manage sensor data, Find sensors in the network, Manage inspections, Change inspections, display inspections	
	6 characters, red, LED 7-segment	6 characters, red, LED 7-segment	6 characters, red, LED 7-segment	Software menus- LCD sensor images - LCD inspections - LCD sensor data - LCD Output 1 active - LED orange Output 2 active - LED orange supply voltage - LED green connection with LAN - LED green sensor search - LED green system menu - LED green setup menu - LED green monitor mode - LED green	
	76 x 73 x 97 mm	76 x 73 x 97 mm	76 x 73 x 97 mm	96 x 104 x 42.5 mm	
	Display unit	Display unit	Display unit	Programming Device	
	24 V DC ± 10 %	24 V DC ± 10 %	24 V DC ± 10 %	24 V DC ± 10 %	
	2	2	4	—	
	—	—	—	—	
	—	—	—	Ethernet 10/100 Base T	
	A, B	A, B	A, $\bar{A}$, B, $\bar{B}$, Z, $\bar{Z}$, A, B, Z	Ethernet Rx+/Ethernet Rx-	
	—	—	—	—	
	—	10 µs	250 ns	—	
	—	2x PNP	2x PNP	—	
	—	—	—	—	
	—	24 V	24 V	—	
	—	600 mA	450 mA	—	
	24 V, max 500 mA	24 V, max 500 mA	5 V/24 V, max 150 mA	—	
	Plastic	Plastic	Plastic	ABS	
	0...40 °C	0...40 °C	0...40 °C	-10...55 °C	
	IP42	IP42	IP42	IP40	
	CE	CE	CE	CE	
	Page 663	Page 663	Page 663	Page 664	

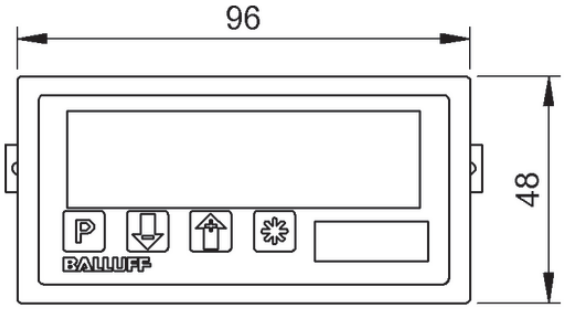

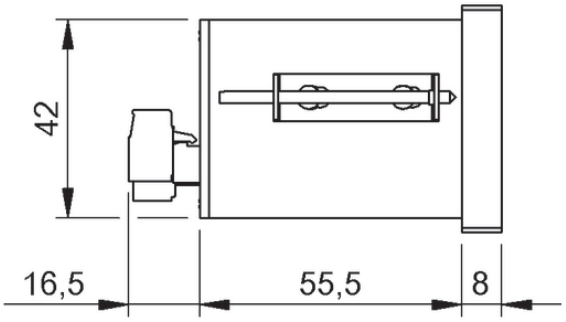

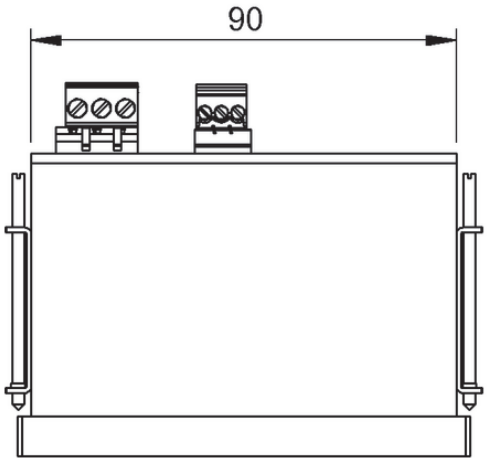

BAE006K

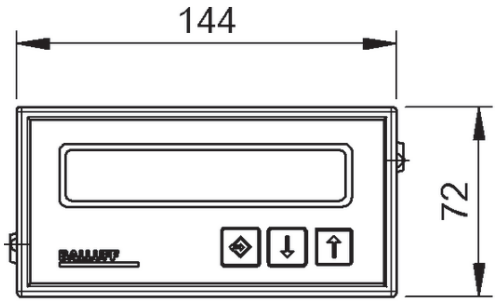

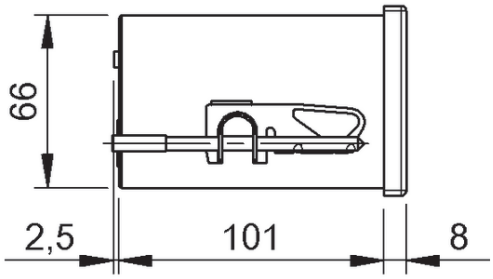

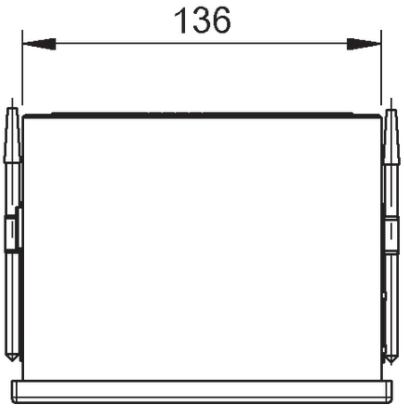

BAE0067, BAE0069

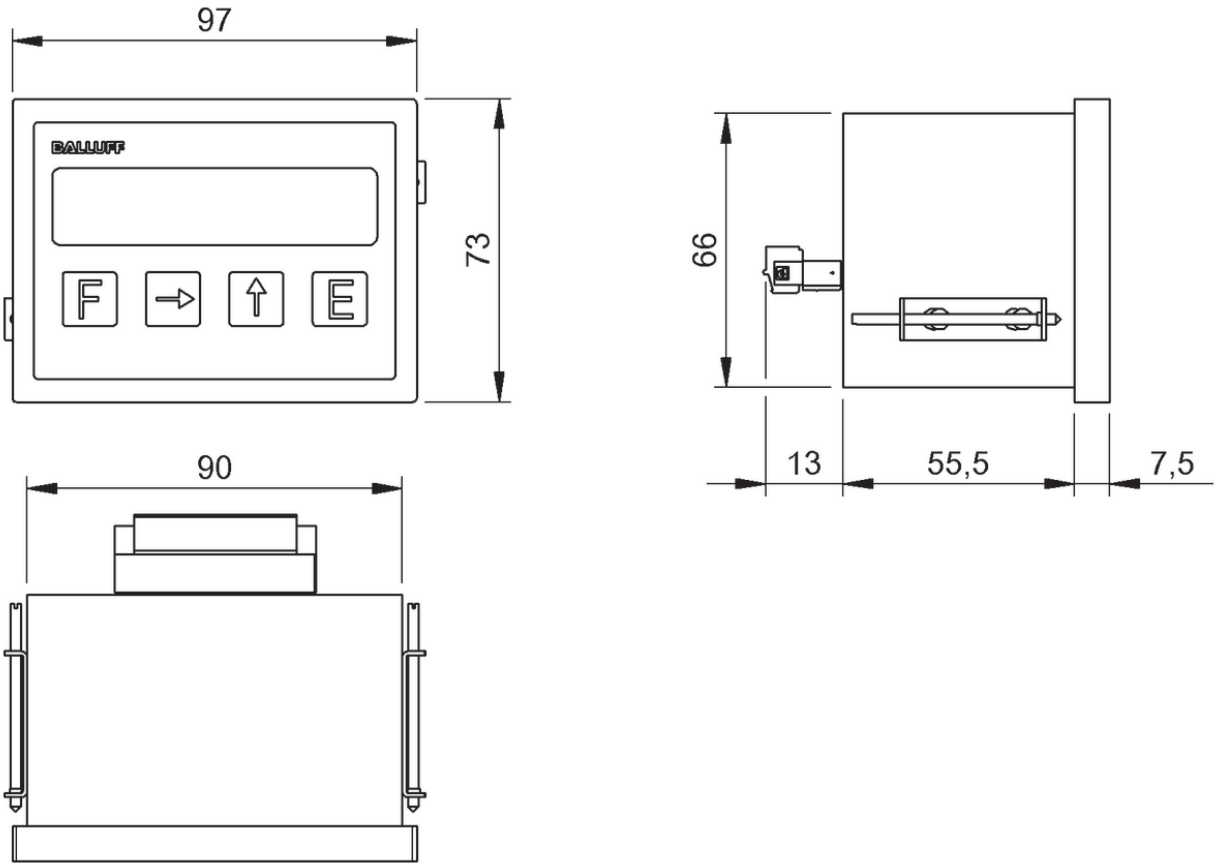

BAE004H, BAE004J

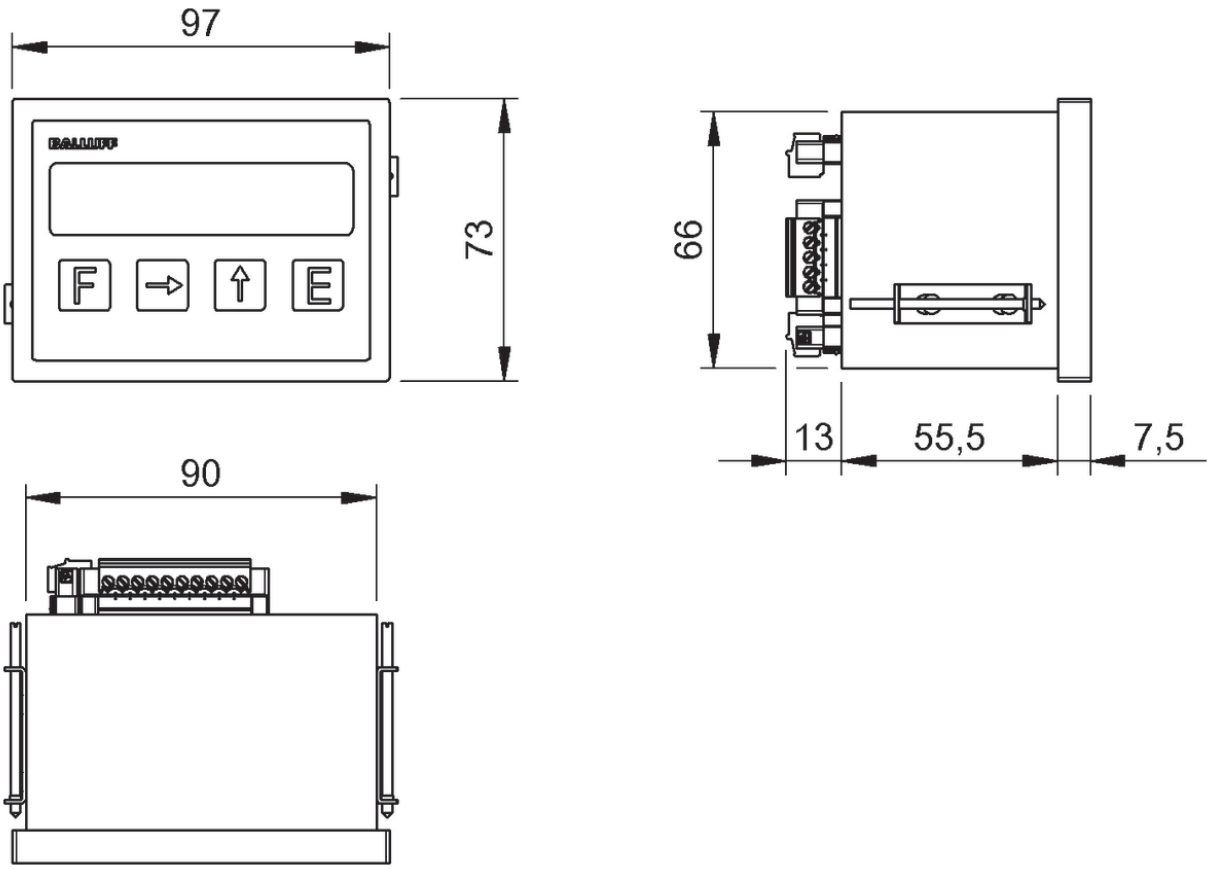

BAE004K

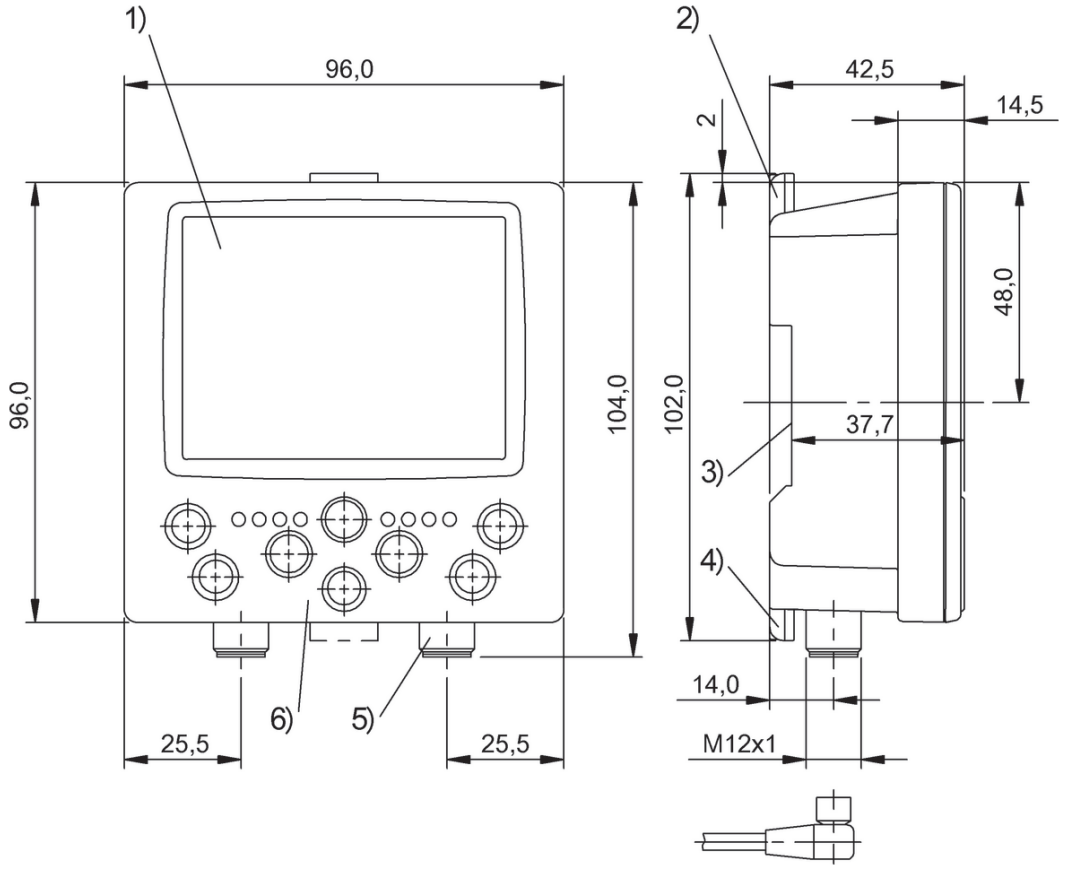

1) Color screen 3.5“, 2) Latch, 3) For DIN rail 35mm, 4) Latch, 5) Connection BVS/LAN, 6) Display and control panel

BAE00EH

	BAE00WC BAE PD-VS-011-01
Short description	Touchpanel PC
Supported operating systems	Windows 10 (32/64 bit)
CPU	—
Working memory	—
Hard drive	—
Dimension	310 x 56 x 240 mm
Mounting	VESA 100 mm
Display	12.1“
Ambient temperature	10...40 °C
Approval/Conformity	CE

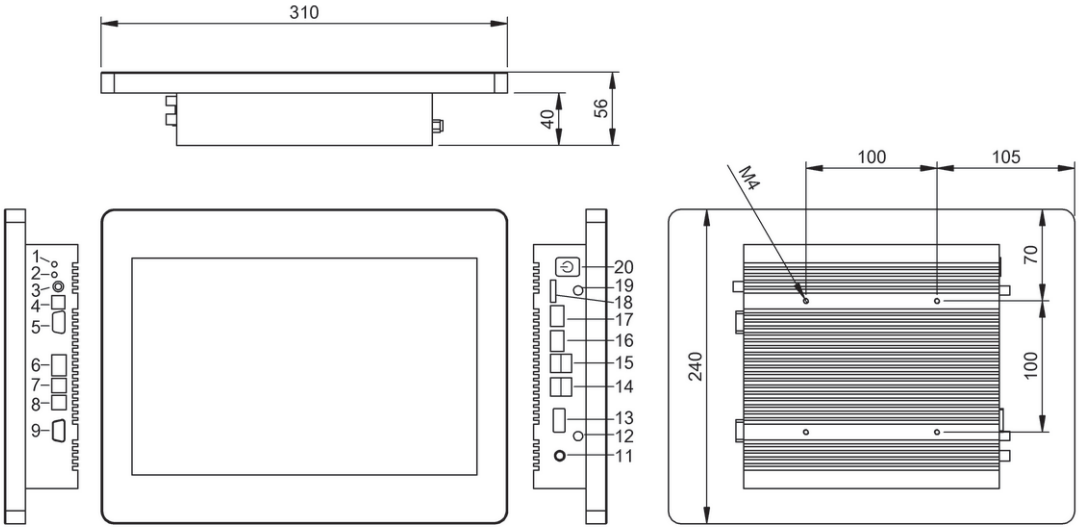

1 Mic-In	6 GPIO	11 Power Connector 8-36VDC	16 10/100/1000Mbit network
2 Ear-Out	7 RS485/COM4 switchable	12 WIFI Connector	17 10/100/1000Mbit network
3 S/PDIF	8 RS485/COM3 switchable	13 COM1, RS232/RS485	18 HDMI connector
4 TOS Link S/PDIF	9 COM2	14 2x USB 2.0	19 WIFI Connector
5 VGA		15 2x USB 3.0	20 On/Off Button

BAE00WC

Alphanumeric index

SORTED BY ORDERING CODE

BAE00EH	BAE PD-VS-002-E	561
BAE00WC	BAE PD-VS-011-01	570
BIS000C	BIS C-108-05/L	321
BAE00JJ	BIS Z-GW-001-IND	306
BAE003U	BIS Z-EL-001-ETHERNET	433
BAE004C	BIS C-720-01-03	391
BAE004H	BDD 610-R3Q3-0-51-N-00	561
BAE004J	BDD 610-R3Q3-0-53-N-00	561
BAE004K	BDD 611-R3Q4-0-52-N-00	561
BAE006K	BDD-UM 3023	560
BAE0067	BDD-AM 10-1-P	560
BAE0069	BDD-AM 10-1-SSD	560
BAE0088	BIS C-810-0-003	391
BAE0094	BIS C-850	391
BAE0095	BIS C-851	391
BAE0096	BIS C-852	391
BAE0097	BIS C-853	391
BAM012C	BIS C-300-ZA1	360
BCC00R2	BIS L-503-PU1-05	462
BCC00R3	BIS L-503-PU1-10	463
BCC00R4	BIS L-503-PU1-15	464
BIS00A4	BIS C-602-019-650-03-KL2	375
BIS00AL	BIS C-6022-019-050-03-ST10	375
BIS00AM	BIS C-6022-019-050-03-ST14	377
BIS00AU	BIS C-6026-034-050-06-ST19	377
BIS00AY	BIS C-6027-039-050-06-ST19	377
BIS00C5	BIS L-400-035-001-00-S115	440
BIS00C6	BIS L-400-035-001-02-S115	448
BIS00C7	BIS L-400-035-002-00-S115	442
BIS00C9	BIS L-400-035-003-00-S115	444
BIS00CC	BIS L-400-035-004-00-S115	446
BIS00CH	BIS L-400-043-001-02-S115	476
BIS00CJ	BIS L-400-043-002-02-S115	478
BIS00CK	BIS L-400-043-003-02-S115	480
BIS00CL	BIS L-400-043-004-02-S115	482
BIS00CM	BIS L-405-033-001-05-MU	458
BIS00CN	BIS L-405-033-002-05-MU	466
BIS00CP	BIS L-405-033-003-05-MU	468
BIS00CR	BIS L-405-033-004-05-MU	470
BIS00CT	BIS L-405-037-001-05-MU	460
BIS00CU	BIS L-405-037-002-05-MU	472
BIS00CW	BIS L-405-037-003-05-MU	474
BIS00CZ	BIS L-409-045-001-07-S4	450
BIS00E0	BIS L-409-045-002-07-S4	452
BIS00E1	BIS L-409-045-003-07-S4	454
BIS00E2	BIS L-409-045-004-07-S4	456
BIS00EJ	BIS M-400-007-001-00-S115	226
BIS00EK	BIS M-400-007-002-00-S115	224
BIS00EM	BIS M-401-007-001-00-S115	228
BIS00EN	BIS M-402-007-002-00-S115	234
BIS00EP	BIS M-407-039-003-06-S115	205
BIS00ER	BIS M-451-007-001-00-S115	230
BIS00EW	BIS M-6002-019-050-03-ST11	203
BIS00F0	BIS M-6022-019-050-03-ST14	205
BIS00F2	BIS M-6026-034-050-06-ST19	205
BIS000H	BIS C-108-11/L	321
BIS00H6	BIS C-60R-001-08P-PU-05	388
BIS00H7	BIS C-60R-001-08P-PU-10	388
BIS00H8	BIS C-60R-001-08P-PU-20	388
BIS00J0	BIS M-6000-007-050-00-ST24	203
BIS00J1	BIS C-140-11/L-M8	321
BIS00J1	BIS C-140-05/L-M8	319
BIS00J2	BIS C-140-05/L-M6	319
BIS00J4	BIS C-380-01/10-00,7	362
BIS00JJ	BIS C-380-06/06-01	362
BIS00JK	BIS C-380-06/06-01,5	362
BIS00JP	BIS C-380-10/10-01	362
BIS00JR	BIS C-380-10/10-05	362
BIS000K	BIS C-108-32/L	323
BIS00K3	BIS C-6008-048-650-06-ST23	371
BIS00K4	BIS C-6028-048-050-06-ST22	371
BIS00KM	BIS M-115-03/A	105
BIS00KR	BIS L-140-05/L-M8	405
BIS00L7	BIS M-6008-048-050-06-ST23	203
BIS00L8	BIS M-106-03/L	103
BIS00L9	BIS C-140-11/L-M10	321
BIS00LY	BIS M-699-052-050-03-ST11	205
BIS00M2	BIS M-152-03/A	103
BIS00LC	BIS M-107-03/L-H200	89
BIS00LH	BIS M-400-045-001-07-S4	240
BIS00LJ	BIS M-400-045-002-07-S4	246
BIS00LK	BIS M-401-045-001-07-S4	256
BIS00LM	BIS M-451-045-001-07-S4	260
BIS00LW	BIS M-402-045-002-07-S4	270
BIS000M	BIS C-117-05/A	319
BIS00M1	BIS M-402-045-004-07-S4	264
BIS00M6	BIS M-341-001-S115	172
BIS00M8	BIS M-140-02/A-M8	81
BIS00M7	BIS U-6020-053-104-00-ST26	43
BIS00M9	BIS M-140-02/A-M6	81
BIS000N	BIS C-117-05/L	319
BIS00N1	BIS M-6000-007-050-00-ST15	203

BIS00N5	BIS M-115-07/A-SA1	105
BIS00N9	BIS C-380-06/06-05	362
BIS00NK	BIS M-305-001-S115	176
BIS00P2	BIS M-307-001-S115	180
BIS00P9	BIS C-302-PU1-10	336
BIS00PA	BIS C-302-PU1-05	336
BIS00PC	BIS C-306-PU1-01	338
BIS00PE	BIS C-306-PU1-10	338
BIS00PF	BIS C-310-PU1-01	346
BIS00PH	BIS C-310-PU1-05	346
BIS00PJ	BIS C-310-PU1-10	346
BIS00RC	BIS U-100-02/CA	15
BIS00NL	BIS U-100-01/CA	15
BIS00NU	BIS M-143-02/A-M6	79
BIS00NW	BIS M-143-02/A-M8	79
BIS00NY	BIS M-352-001-S115	178
BIS00NZ	BIS M-191-02/A	101
BIS00P0	BIS U-301-C0-TNCB	29
BIS00P3	BIS M-153-02/A	95
BIS00P5	BIS C-300-PU1-01	334
BIS00P6	BIS C-300-PU1-10	334
BIS00PK	BIS C-315-PU1-01	354
BIS00PL	BIS C-315-PU1-05	354
BIS00PM	BIS C-315-PU1-10	354
BIS00PN	BIS C-351-PU1-05	358
BIS00PP	BIS C-351-PU1-10	358
BIS00RF	BIS VM-300-001-S4	144
BIS00RU	BIS M-402-007-004-00-S115	232
BIS000T	BIS C-121-04/L	313
BIS00T0	BIS VM-301-001-S4	118
BIS00T3	BIS V-6102-019-C001	425
BIS00T3	BIS V-6102-019-C001	195
BIS00T3	BIS V-6102-019-C001	33
BIS00T6	BIS VM-352-001-S4	150
BIS00T7	BIS VM-306-001-S4	152
BIS00T8	BIS VM-307-001-S4	156
BIS00T9	BIS VM-305-001-S4	148
BIS00TU	BIS C-6028-048-050-06-ST28	371
BIS00TY	BIS U-301-C1-TNCB	29
BIS00U6	BIS VL-301-001-S4	410
BIS00U9	BIS V-6110-063-C002	431
BIS00U9	BIS V-6110-063-C002	201
BIS00U9	BIS V-6110-063-C002	41
BIS00UC	BIS M-116-03/A	67
BIS00UE	BIS M-116-08/A	67
BIS00UF	BIS VL-302-001-S4	416
BIS00UH	BIS VL-304-001-S4	420
BIS00UJ	BIS VL-306-001-S4	414
BIS00UK	BIS VL-350-001-S4	418
BIS00UL	BIS VL-300-001-S4	408
BIS00UR	BIS U-6027-060-144-06-ST27	45
BIS00W1	BIS M-410-067-001-04-S92	292
BIS00W2	BIS M-410-068-001-00-S115	296
BIS00W3	BIS M-410-068-001-02-S115	294
BIS00W4	BIS M-410-068-001-09-S72	290
BIS00W5	BIS M-411-067-001-04-S92	300
BIS00W6	BIS M-411-068-001-00-S115	304
BIS00W7	BIS M-411-068-001-02-S115	302
BIS00W8	BIS M-411-068-001-09-S72	298
BIS00W9	BIS M-136-03/L	87
BIS00W9	BIS U-102-05/CA-HT	17
BIS00WF	BIS U-101-04/CA-HT	17
BIS00WH	BIS U-101-04/CA	15
BIS00WK	BIS M-373-000-A01	186
BIS00WL	BIS M-372-000-A01	184
BIS00WM	BIS M-371-000-A01	182
BIS00WN	BIS M-370-000-A02	188
BIS00Y1	BIS M-136-03/L-HT	101
BIS00Y2	BIS M-135-07/L-HT	99
BIS00Y3	BIS M-135-07/L	87
BIS00Y4	BIS M-135-03/L-HT	99
BIS00Y5	BIS M-135-03/L	87
BIS00Y6	BIS M-135-02/L	87
IS00Y7	BIS M-134-10/L-HT	97
BIS00Y8	BIS M-134-10/L	77
BIS00Y9	BIS M-133-02/A	89
BIS00YA	BIS M-132-10/L-HT	97
BIS00YC	BIS M-132-10/L	75
BIS00YE	BIS M-132-03/L-HT	97
BIS00YF	BIS M-132-03/L	75
BIS00YH	BIS M-131-10/L	73
BIS00YJ	BIS M-130-10/L	69
BIS00YK	BIS M-130-07/L	69
BIS00YL	BIS M-130-03/L	67
BIS00YY	BIS U-626-069-111-06-ST32	49
BIS00YZ	BIS U-626-069-111-06-ST31	49
BIS00Z0	BIS U-626-069-101-06-ST32	49
BIS00Z3	BIS U-620-068-111-00-S115	49
BIS00ZA	BIS M-626-069-A01-06-ST32	209
BIS00ZC	BIS M-626-069-A01-06-ST31	209
BIS00ZE	BIS M-623-071-A01-03-ST30	209
BIS00ZF	BIS M-622-070-A01-03-ST33	207
BIS00ZH	BIS M-620-068-A01-00-ST29	207
BIS00ZJ	BIS M-620-068-A01-00-S115	207
BIS00ZU	BIS U-6028-048-104-06-ST28	45
BIS00ZW	BIS U-6028-048-114-06-ST28	45
BIS01A0	BIS M-122-21/A	69
BIS01A1	BIS M-103-03/L-SA1	69
BIS01AA	BIS V-6107-039-C007	425
BIS01AA	BIS V-6107-039-C007	195
BIS01AA	BIS V-6107-039-C007	37
BIS01AC	BIS V-6107-039-C107	37
BIS01AC *	BIS V-6107-039-C107	195
BIS01AC *	BIS V-6107-039-C107	425
BIS01AE	BIS V-6108-048-C007	423
BIS01AE	BIS V-6108-048-C007	193
BIS01AE	BIS V-6108-048-C007	39
BIS01AF	BIS V-6108-048-C107	39
BIS01AF *	BIS V-6108-048-C107	423
BIS01AF *	BIS V-6108-048-C107	193
BIS01AT	BIS U-157-N9/C1M	19
BIS01AU	BIS U-157-N9/C0M	19

BIS01AW	BIS U-303-C0-TNCB	29
BIS01AY	BIS U-303-C1-TNCB	29
BIS001C	BIS C-128-11/L	317
BIS01CA	BIS M-1L4-03/L-D015	105
BIS01CE	BIS M-107-03/L	73
BIS01CF	BIS U-104-A0/C0M-HT	19
BIS01CH	BIS U-105-A0/C0M-HT	19
BIS01CJ	BIS U-180-A0/C0M-HT	17
BIS01CK	BIS U-180-A0/C1M-HT	17
BIS01CM	BIS U-104-A0/C1M-HT	19
BIS01CN	BIS U-105-A0/C1M-HT	19
BIS01CU	BIS VM-309-001-S4	154
BIS001E	BIS C-130-05/L	315
BIS01E2	BIS M-4A9-082-401-07-PU1-0,3	280
BIS01E4	BIS U-4A7-082-01C-07-S4	61
BIS01E5	BIS M-4A3-082-401-07-S4	274
BIS01E6	BIS M-4A7-082-401-07-S4	278
BIS01E8	BIS U-4A7-082-11C-07-S4	61
BIS01E9	BIS U-4A7-082-21C-07-S4	61
BIS001H	BIS C-130-05/L-SA1	329
BIS001Y	BIS C-131-05/L	329
BIS0002	BIS C-100-05/A	315
BIS002A	BIS C-150-11/A	325
BIS002E	BIS C-150-32/A	325
BIS002K	BIS C-190-05/L	327
IS002N	BIS C-190-32/L	327
BIS002P	BIS C-191-05/L	327
BIS002Y	BIS C-122-04/L-ZC1	329
BIS003A	BIS L-102-05/L	405
BIS003C	BIS L-102-05/L-RO	399
BIS003E	BIS L-103-05/L	405
BIS003F	BIS L-103-05/L-RO	399
BIS003N	BIS L-150-05/A	406
BIS003R	BIS L-200-03/L	401
BIS003T	BIS L-201-03/L	401
BIS003U	BIS L-202-03/L	401
BIS003W	BIS L-203-03/L	401
BIS003Y	BIS M-101-01/L	77
BIS003Z	BIS M-102-01/L	77
BIS0004	BIS C-103-05/A	315
BIS004A	BIS M-122-02/A	71
BIS004E	BIS M-125-01/L	83
BIS004F	BIS M-150-02/A	89
BIS004H	BIS M-151-02/A	89
BIS005A	BIS M-304-001-S115	162
BIS005C	BIS M-351-001-S115	174
BIS005Z	BIS C-300-PU1-05	334
BIS0006	BIS C-104-11/A	317
BIS006Y	BIS C-315/05-S4	356
BIS006Z	BIS C-315/10-S4	356
BIS0007	BIS C-104-32/A	317
BIS007A	BIS C-319/05-S4	342
BIS007C	BIS C-319/10-S4	342
BIS007H	BIS C-322-PU1-05	352
BIS007J	BIS C-323/01-S4	348
BIS007K	BIS C-323/05-S4	348
BIS007L	BIS C-323/10-S4	348
BIS007P	BIS C-325/01-S4	344
BIS007R	BIS C-325/05-S4	344
BIS007T	BIS C-325/10-S4	344
BIS008U	BIS C-600-007-650-00-KL1	371
BIS0009	BIS C-105-05/A	315
BIS009A	BIS C-6002-019-650-03-ST11	373
BIS009F	BIS C-6002-019-654-03-ST11	373
BIS009J	BIS C-6002-019-655-03-ST11	375
BIS009L	BIS C-6002-028-650-03-KL2	373
BIS009M	BIS C-6002-028-650-03-ST11	375
BIS010P	BIS V-6111-073-C003	431
BIS010P	BIS V-6111-073-C003	201
BIS0011	BIS C-122-04/L	313
BIS011A	BIS M-108-14/A	85
BIS011E	BIS M-108-13/A	85
BIS011F	BIS M-108-11/A	83
BIS011M	BIS M-155-11/A	91
BIS011N	BIS M-155-14/A	93
BIS011P	BIS M-628-075-A01-03-ST34	207
BIS011U	BIS M-153-14/A	95
BIS011W	BIS M-153-11/A	95
BIS011Y	BIS M-153-13/A	95
BIS011Z	BIS M-155-13/A	93
BIS012E	BIS V-6102-019-C101	367
BIS012E	BIS V-6102-019-C101	33
BIS012E *	BIS V-6102-019-C101	195
BIS012E *	BIS V-6102-019-C101	425
BIS012F	BIS V-6106-034-C002	429
BIS012F	BIS V-6106-034-C002	199
BIS012F	BIS V-6106-034-C002	33
BIS012H	BIS M-1L4-03/L-D018	105
BIS012J	BIS M-156-11/A	91
BIS012K	BIS M-156-13/A	93
BIS012L	BIS M-156-14/A	93
BIS012R	BIS U-6027-060-124-06-ST27	43
BIS012Z	BIS VM-351-401-S4	122
BIS013H	BIS VM-348-401-S4	124
BIS013J	BIS U-6026-034-114-06-ST35	43
BIS013P	BIS U-142-06/CA-M8-GY	15
BIS013R	BIS U-142-07/CA-M8-GY	15
BIS013U	BIS V-6108-048-C002	193
BIS013U	BIS V-6108-048-C002	39
BIS013U	BIS V-6108-048-C002	423
BIS013W	BIS V-6108-048-C102	39
BIS013W	BIS V-6108-048-C102	367
BIS013W *	BIS V-6108-048-C102	193
BIS013W *	BIS V-6108-048-C102	423
BIS013Z	BIS VM-343-401-S4	128
BIS014C	BIS V-6106-034-C102	369
BIS014C	BIS V-6106-034-C102	35
BIS014C *	BIS V-6106-034-C102	429
BIS014C *	BIS V-6106-034-C102	199
BIS014E	BIS V-6111-073-C103	369
BIS014E *	BIS V-6111-073-C103	201
BIS014E *	BIS V-6111-073-C103	431

BIS014H	BIS U-6027-060-174-06-ST27	45
BIS014J	BIS M-408-045-001-07-S4	252
BIS014K	BIS M-458-045-001-07-S4	254
BIS014N	BIS VM-920	190
BIS0015	BIS C-122-11/L	313
BIS015K	BIS VM-333-401-S4	142
BIS015M	BIS VM-330-401-S4	126
BIS015P	BIS VM-332-401-S4	140
BIS015R	BIS M-404-045-401-07-S4	238
BIS015T	BIS M-400-045-401-07-S4	242
BIS015U	BIS VL-308-001-S4	412
BIS015W	BIS C-122-05/L	313
BIS015Y	BIS VU-320-C1-S4	27
BIS015Z	BIS VU-320-C0-S4	27
BIS016E	BIS U-158-A0/C0M-HT	21
BIS016F	BIS U-158-A0/C1M-HT	21
BIS016H	BIS U-159-M2/CAA	21
BIS016M	BIS U-111-M2/CAA	17
BIS0017	BIS C-127-05/L	323
BIS017A	BIS M-4008-048-002-ST4	284
BIS017F	BIS M-157-17/A	103
BIS017J	BIS U-6028-048-124-06-ST28	47
BIS018A	BIS M-4006-034-001-ST4	286
BIS018C	BIS M-4006-034-002-ST4	288
BIS018E	BIS M-404-045-401-07-S4-SA1	236
BIS018F	BIS U-112-M4/CAA	17
BIS018H	BIS U-113-M4/CAA	17
BIS018J	BIS V-6107-039-C006	427
BIS018J	BIS V-6107-039-C006	197
BIS018J	BIS V-6107-039-C006	35
BIS018K	BIS V-6107-039-C106	367
BIS018K	BIS V-6107-039-C106	37
BIS018K *	BIS V-6107-039-C106	427
BIS018K *	BIS V-6107-039-C106	197
BIS018N	BIS U-6026-034-124-06-ST35	43
BIS018P	BIS M-137-10/L-HT	97
BIS018R	BIS M-138-03/L-HT	99
BIS018T	BIS M-138-07/L-HT	99
BIS018Y	BIS M-113-03/L	67
BIS018Z	BIS VU-320-C2-S4	27
BIS0019	BIS C-128-05/L	317
BIS019C	BIS M-1R1-02/L	#71
BIS019E	BIS M-1R2-02/L	73
BIS019U	BIS VM-343-501/05-S115	130
BIS019W	BIS VM-343-501/10-S115	132
BIS019Y	BIS VM-346-501/05-S115	136
BIS019Z	BIS VM-346-501/10-S115	138
BIS0021	BIS C-134-11/L	325
BIS0028	BIS C-150-05/A	325
BIS0033	BIS L-100-01/L	403
BIS0034	BIS L-100-05/L	403
BIS0036	BIS L-101-01/L	403
BIS0037	BIS L-101-05/L	403
BIS0038	BIS L-101-05/L-RO	399
BIS0039	BIS L-102-01/L	405
BIS0040	BIS M-105-01/A	71
BIS0042	BIS M-105-02/A	73
BIS0043	BIS M-108-02/L	83
BIS0044	BIS M-110-02/L	75
BIS0045	BIS M-111-02/L	77
BIS0046	BIS M-112-02/L	79
BIS0048	BIS M-122-01/A	71
BIS0053	BIS M-300-001-S115	164
BIS0054	BIS M-300-003-S115	166
BIS0055	BIS M-301-001-S115	168
BIS0056	BIS M-301-003-S115	170
BIS0057	BIS M-302-001-S115	158
BIS0059	BIS M-302-003-S115	160
BIS0066	BIS C-305-PU1-01	350
BIS0067	BIS C-305-PU1-05	350
BIS0068	BIS C-305-PU1-10	350
BIS0077	BIS C-319-PU1-01	340
BIS0078	BIS C-319-PU1-05	340
BIS0079	BIS C-319-PU1-10	340
BIS0099	BIS C-6002-019-650-03-KL2	373
BIS0100	BIS M-143-02/A-M8-SA2	79
BIS0102	BIS M-401-072-001-07-S4	258
BIS0103	BIS M-451-072-001-07-S4	262
BIS0104	BIS M-400-072-002-07-S4	248
BIS0105	BIS M-402-072-002-07-S4	272
BIS0106	BIS M-402-072-004-07-S4	268
BIS0108	BIS M-400-072-001-07-S4	244
BIS0111	BIS M-108-20/A	85
BIS0112	BIS M-156-20/A	91
BIS0119	BIS M-142-20/A-M8-GY	81
BIS0122	BIS V-6106-034-C004	33
BIS0122	BIS V-6106-034-C004	199
BIS0122	BIS V-6106-034-C004	429
BIS0126	BIS M-402-045-007-07-S4	266
BIS0130	BIS VM-341-401-S4	120
BIS0131	BIS VM-355-401-S4	116
BIS0132	BIS VM-344-401-S4	146
BIS0133	BIS VM-345-401-S4	114
BIS0138	BIS C-300-PU1-02	334
BIS0140	BIS VM-346-401-S4	134
BIS0143	BIS M-128-03/L	75
BIS0146	BIS V-6106-034-C104	35
BIS0146	BIS V-6106-034-C104	199
BIS0146	BIS V-6106-034-C104	369
BIS0146	BIS V-6106-034-C104	429
BIS0147	BIS V-6110-063-C102	41
BIS0147	BIS V-6110-063-C102	201
BIS0147	BIS V-6110-063-C102	369
BIS0147	BIS V-6110-063-C102	431
BIS0152	BIS U-6028-048-134-06-ST28	47
BIS0155	BIS M-405-045-008-07-S4	250
BIS0163	BIS U-150-N4/CAA	19
BIS0164	BIS U-151-M2/CAA	21
BIS0166	BIS U-153-M0/CAA	19
BIS0167	BIS U-154-M0/CAA	21
BIS0168	BIS U-155-M2/CAA	21
BIS0169	BIS U-156-M0/CAA	21

BIS0172	BIS U-108-M2/CAM	15
BIS0173	BIS U-109-M2/CAM	17
BIS0174	BIS U-103-M2/CAM	15
BIS0176	BIS M-127-02/A	103
BIS0178	BIS U-142-A0/C1M-GY	15
BIS0179	BIS M-4008-048-001-ST4	282
BIS0180	BIS M-127-02/A-SA1	101
BIS0186	BIS V-6107-039-C005	35
BIS0186	BIS V-6107-039-C005	197
BIS0186	BIS V-6107-039-C005	427
BIS0187	BIS V-6107-039-C105	37
BIS0187	BIS V-6107-039-C105	367
BIS0187 *	BIS V-6107-039-C105	197
BIS0187 *	BIS V-6107-039-C105	427
BIS0190	BIS VU-320-C4-S4	27
BIS0191	BIS VU-320-C5-S4	27
BIS0192	BIS VU-320-C7-S4	27
BIS0193	BIS U-6127-081-104-06-ST36	47
BIS0194	BIS U-6127-081-114-06-ST36	47
BIS0197	BIS VM-349-401-S4	112
BIS0198	BIS M-157-17/A-SA1	101
BNI007F	BNI IOL-801-000-Z036	552
BNI007T	BNI IOL-800-000-Z036	552
BNI008A	BNI IOL-801-102-Z037	553
BNI0072	BNI IOL-802-000-Z036	553
BNI0082	BNI IOL-802-102-Z036	553
BNI0083	BNI IOL-802-000-Z037	554
BNI0085	BNI IOL-802-102-Z037	554
BNI0086	BNI IOL-801-000-Z037	553
BNI0087	BNI IOL-800-000-Z037	552
BNI0088	BNI IOL-801-102-Z036	553
BVS000E	BVS OI-3-005-E	532
BVS000J	BVS OI-3-051-E	524
BVS000K	BVS OI-3-053-E	524
BVS000L	BVS OI-3-055-E	524
BVS000T	BVS ID-3-003-E	539
BVS000W	BVS OI-3-057-E	524
BVS000Y	BVS ID-3-007-E	539
BVS0001	BVS ID-3-001-E	539
BVS001A	BVS ID-3-103-E	538
BVS001C	BVS ID-3-105-E	538
BVS001F	BVS UR-3-105-E	520
BVS001H	BVS UR-3-101-E	520
BVS001J	BVS UR-3-103-E	520
BVS001K	BVS UR-3-107-E	520
BVS001L	BVS UR-3-005-E	520
BVS001M	BVS UR-3-001-E	520
BVS001N	BVS UR-3-003-E	520
BVS001P	BVS UR-3-007-E	520
BVS001R	BVS ID-3-005-E	539
BVS001T	BVS HS-PC-DPW-MA-01	538
BVS001U	BVS HS-PC-HDW-MA-01	538
BVS001Y	BVS HS-PB-HDW-MZ-01	538
BVS001Z	BVS HS-PB-DPW-MZ-01	538
BVS0003	BVS OI-3-001-E	532
BVS003A	BVS CA-GX0-0016ZG-112C41-XAS2	510
BVS003C	BVS CA-GX0-0016ZC-111C41-XAS2	510
BVS003E	BVS CA-SF2-0124AG-112121-XAS2	513
BVS003F	BVS CA-SF2-0124AC-111121-XAS2	512
BVS003H	BVS CA-SF2-0051AG-112121-XAS2	513
BVS003J	BVS CA-SF2-0051AC-111121-XAS2	513
BVS003K	BVS CA-SF2-0032AG-112121-XAS2	513
BVS003L	BVS CA-SF2-0032AC-111121-XAS2	513
BVS003M	BVS CA-SF2-0016ZG-112121-XAS2	512
BVS003N	BVS CA-SF2-0016ZC-111121-XAS2	512
BVS0005	BVS OI-3-003-E	532
BVS0012	BVS OI-3-103-E	528
BVS0013	BVS OI-3-105-E	528
BVS0014	BVS OI-3-101-E	528
BVS0015	BVS OI-3-151-E	524
BVS0016	BVS OI-3-155-E	524
BVS0017	BVS OI-3-153-E	524
BVS0018	BVS OI-3-157-E	524
BVS0019	BVS ID-3-101-E	538
BVS0034	BVS CA-GX0-0124AG-112C41-XAS2	511
BVS0035	BVS CA-GX0-0124AC-111C41-XAS2	510
BVS0036	BVS CA-GX0-0051AG-112C41-XAS2	511
BVS0037	BVS CA-GX0-0051AC-111C41-XAS2	511
BVS0038	BVS CA-GX0-0032AG-112C41-XAS2	511
BVS0039	BVS CA-GX0-0032AC-111C41-XAS2	511

Alphanumeric index

SORTED BY PART NUMBER

BIS013P	**BIS U-142-06/CA-M8-GY**	**15**
BIS00NL	**BIS U-100-01/CA**	**15**
BIS0178	**BIS U-142-A0/C1M-GY**	**15**
BIS013R	**BIS U-142-07/CA-M8-GY**	**15**
BIS00RC	**BIS U-100-02/CA**	**15**
BIS00WH	**BIS U-101-04/CA**	**15**
BIS0174	**BIS U-103-M2/CAM**	**15**
BIS0172	**BIS U-108-M2/CAM**	**15**
BIS01CJ	**BIS U-180-A0/C0M-HT**	**17**
BIS01CK	**BIS U-180-A0/C1M-HT**	**17**
BIS0173	**BIS U-109-M2/CAM**	**17**
BIS018F	**BIS U-112-M4/CAA**	**17**
BIS018H	**BIS U-113-M4/CAA**	**17**
BIS016M	**BIS U-111-M2/CAA**	**17**
BIS00WF	**BIS U-101-04/CA-HT**	**17**
BIS00WC	**BIS U-102-05/CA-HT**	**17**
BIS01CF	**BIS U-104-A0/C0M-HT**	**19**
BIS01CH	**BIS U-105-A0/C0M-HT**	**19**
BIS01AU	**BIS U-157-N9/C0M**	**19**
BIS01CM	**BIS U-104-A0/C1M-HT**	**19**
BIS01CN	**BIS U-105-A0/C1M-HT**	**19**
BIS01AT	**BIS U-157-N9/C1M**	**19**
BIS0163	**BIS U-150-N4/CAA**	**19**
BIS0166	**BIS U-153-M0/CAA**	**19**
BIS016E	**BIS U-158-A0/C0M-HT**	**21**
BIS016F	**BIS U-158-A0/C1M-HT**	**21**
BIS0167	**BIS U-154-M0/CAA**	**21**
BIS0169	**BIS U-156-M0/CAA**	**21**
BIS0164	**BIS U-151-M2/CAA**	**21**
BIS0168	**BIS U-155-M2/CAA**	**21**
BIS016H	**BIS U-159-M2/CAA**	**21**
BIS015Z	**BIS VU-320-C0-S4**	**27**
BIS015Y	**BIS VU-320-C1-S4**	**27**
BIS018Z	**BIS VU-320-C2-S4**	**27**
BIS0190	**BIS VU-320-C4-S4**	**27**
BIS0191	**BIS VU-320-C5-S4**	**27**
BIS0192	**BIS VU-320-C7-S4**	**27**
BIS00P0	**BIS U-301-C0-TNCB**	**29**
BIS01AW	**BIS U-303-C0-TNCB**	**29**
BIS00TY	**BIS U-301-C1-TNCB**	**29**
BIS01AY	**BIS U-303-C1-TNCB**	**29**
BIS00T3	**BIS V-6102-019-C001**	**33**
BIS012E	**BIS V-6102-019-C101**	**33**
BIS012F	**BIS V-6106-034-C002**	**33**
BIS0122	**BIS V-6106-034-C004**	**33**
BIS014C	**BIS V-6106-034-C102**	**35**
BIS0146	**BIS V-6106-034-C104**	**35**
BIS0186	**BIS V-6107-039-C005**	**35**
BIS018J	**BIS V-6107-039-C006**	**35**
BIS01AA	**BIS V-6107-039-C007**	**37**
BIS0187	**BIS V-6107-039-C105**	**37**
BIS018K	**BIS V-6107-039-C106**	**37**
BIS01AC	**BIS V-6107-039-C107**	**37**
BIS013U	**BIS V-6108-048-C002**	**39**
BIS01AE	**BIS V-6108-048-C007**	**39**
BIS013W	**BIS V-6108-048-C102**	**39**
BIS01AF	**BIS V-6108-048-C107**	**39**
BIS00U9	**BIS V-6110-063-C002**	**41**
BIS0147	**BIS V-6110-063-C102**	**41**
BIS00M7	**BIS U-6020-053-104-00-ST26**	**43**
BIS013J	**BIS U-6026-034-114-06-ST35**	**43**
BIS018N	**BIS U-6026-034-124-06-ST35**	**43**
BIS012R	**BIS U-6027-060-124-06-ST27**	**43**
BIS00ZU	**BIS U-6028-048-104-06-ST28**	**45**
BIS00ZW	**BIS U-6028-048-114-06-ST28**	**45**
BIS00UR	**BIS U-6027-060-144-06-ST27**	**45**
BIS014H	**BIS U-6027-060-174-06-ST27**	**45**
BIS0193	**BIS U-6127-081-104-06-ST36**	**47**
BIS0194	**BIS U-6127-081-114-06-ST36**	**47**
BIS0152	**BIS U-6028-048-134-06-ST28**	**47**
BIS017J	**BIS U-6028-048-124-06-ST28**	**47**
BIS00Z3	**BIS U-620-068-111-00-S115**	**49**
BIS00Z0	**BIS U-626-069-101-06-ST32**	**49**
BIS00YZ	**BIS U-626-069-111-06-ST31**	**49**
BIS00YY	**BIS U-626-069-111-06-ST32**	**49**
BIS01E4	**BIS U-4A7-082-01C-07-S4**	**61**
BIS01E8	**BIS U-4A7-082-11C-07-S4**	**61**
BIS01E9	**BIS U-4A7-082-21C-07-S4**	**61**
BIS018Y	**BIS M-113-03/L**	**67**
BIS00UC	**BIS M-116-03/A**	**67**
BIS00UE	**BIS M-116-08/A**	**67**
BIS00YL	**BIS M-130-03/L**	**67**
BIS00YJ	**BIS M-130-10/L**	**69**
BIS00YK	**BIS M-130-07/L**	**69**
BIS01A1	**BIS M-103-03/L-SA1**	**69**
BIS01A0	**BIS M-122-21/A**	**69**
BIS0048	**BIS M-122-01/A**	**71**
BIS004A	**BIS M-122-02/A**	**71**
BIS019C	**BIS M-1R1-02/L**	**71**
BIS0040	**BIS M-105-01/A**	**71**

BIS0042	**BIS M-105-02/A**	**73**
BIS00YH	**BIS M-131-10/L**	**73**
BIS019E	**BIS M-1R2-02/L**	**73**
BIS01CE	**BIS M-107-03/L**	**73**
BIS0044	**BIS M-110-02/L**	**75**
BIS00YF	**BIS M-132-03/L**	**75**
BIS00YC	**BIS M-132-10/L**	**75**
BIS0143	**BIS M-128-03/L**	**75**
BIS003Y	**BIS M-101-01/L**	**77**
BIS0045	**BIS M-111-02/L**	**77**
BIS00Y8	**BIS M-134-10/L**	**77**
BIS003Z	**BIS M-102-01/L**	**77**
BIS0046	**BIS M-112-02/L**	**79**
BIS00NW	**BIS M-143-02/A-M8**	**79**
BIS0100	**BIS M-143-02/A-M8-SA2**	**79**
BIS00NU	**BIS M-143-02/A-M6**	**79**
BIS00M8	**BIS M-140-02/A-M8**	**81**
BIS00M9	**BIS M-140-02/A-M6**	**81**
BIS0119	**BIS M-142-20/A-M8-GY**	**81**
BIS004E	**BIS M-125-01/L**	**83**
BIS0043	**BIS M-108-02/L**	**83**
BIS011F	**BIS M-108-11/A**	**83**
BIS0111	**BIS M-108-20/A**	**85**
BIS011E	**BIS M-108-13/A**	**85**
BIS011A	**BIS M-108-14/A**	**85**
BIS00Y5	**BIS M-135-03/L**	**87**
BIS00Y3	**BIS M-135-07/L**	**87**
BIS00Y6	**BIS M-135-02/L**	**87**
BIS00W9	**BIS M-136-03/L**	**87**
BIS00Y9	**BIS M-133-02/A**	**89**
BIS00LC	**BIS M-107-03/L-H200**	**89**
BIS004F	**BIS M-150-02/A**	**89**
BIS004H	**BIS M-151-02/A**	**89**
BIS011M	**BIS M-155-11/A**	**91**
BIS012J	**BIS M-156-11/A**	**91**
BIS0112	**BIS M-156-20/A**	**91**
BIS011Z	**BIS M-155-13/A**	**93**
BIS012K	**BIS M-156-13/A**	**93**
BIS011N	**BIS M-155-14/A**	**93**
BIS012L	**BIS M-156-14/A**	**93**
BIS00P3	**BIS M-153-02/A**	**95**
BIS011W	**BIS M-153-11/A**	**95**
BIS011Y	**BIS M-153-13/A**	**95**
BIS011U	**BIS M-153-14/A**	**95**
BIS00YE	**BIS M-132-03/L-HT**	**97**
BIS00YA	**BIS M-132-10/L-HT**	**97**
BIS00Y7	**BIS M-134-10/L-HT**	**97**
BIS018P	**BIS M-137-10/L-HT**	**97**
BIS00Y4	**BIS M-135-03/L-HT**	**99**
BIS018R	**BIS M-138-03/L-HT**	**99**
BIS00Y2	**BIS M-135-07/L-HT**	**99**
BIS018T	**BIS M-138-07/L-HT**	**99**
BIS00Y1	**BIS M-136-03/L-HT**	**101**
BIS0198	**BIS M-157-17/A-SA1**	**101**
BIS00NZ	**BIS M-191-02/A**	**101**
BIS0180	**BIS M-127-02/A-SA1**	**101**
BIS0176	**BIS M-127-02/A**	**103**
BIS017F	**BIS M-157-17/A**	**103**
BIS00M2	**BIS M-152-03/A**	**103**
BIS00L8	**BIS M-106-03/L**	**103**
BIS00KM	**BIS M-115-03/A**	**105**
BIS00N5	**BIS M-115-07/A-SA1**	**105**
BIS01CA	**BIS M-1L4-03/L-D015**	**105**
BIS012H	**BIS M-1L4-03/L-D018**	**105**
BIS0197	**BIS VM-349-401-S4**	**112**
BIS0133	**BIS VM-345-401-S4**	**114**
BIS0131	**BIS VM-355-401-S4**	**116**
BIS00T0	**BIS VM-301-001-S4**	**118**
BIS0130	**BIS VM-341-401-S4**	**120**
BIS012Z	**BIS VM-351-401-S4**	**122**
BIS013H	**BIS VM-348-401-S4**	**124**
BIS015M	**BIS VM-330-401-S4**	**126**
BIS013Z	**BIS VM-343-401-S4**	**128**
BIS019U	**BIS VM-343-501/05-S115**	**130**
BIS019W	**BIS VM-343-501/10-S115**	**132**
BIS0140	**BIS VM-346-401-S4**	**134**
BIS019Y	**BIS VM-346-501/05-S115**	**136**
BIS019Z	**BIS VM-346-501/10-S115**	**138**
BIS015P	**BIS VM-332-401-S4**	**140**
BIS015K	**BIS VM-333-401-S4**	**142**
BIS00RF	**BIS VM-300-001-S4**	**144**
BIS0132	**BIS VM-344-401-S4**	**146**
BIS00T9	**BIS VM-305-001-S4**	**148**
BIS00T6	**BIS VM-352-001-S4**	**150**
BIS00T7	**BIS VM-306-001-S4**	**152**
BIS01CU	**BIS VM-309-001-S4**	**154**
BIS00T8	**BIS VM-307-001-S4**	**156**
BIS0057	**BIS M-302-001-S115**	**158**
BIS0059	**BIS M-302-003-S115**	**160**
BIS005A	**BIS M-304-001-S115**	**162**
BIS0053	**BIS M-300-001-S115**	**164**
BIS0045	**BIS M-300-003-S115**	**166**
BIS0055	**BIS M-301-001-S115**	**168**
BIS0056	**BIS M-301-003-S115**	**170**
BIS00M6	**BIS M-341-001-S115**	**172**
BIS005C	**BIS M-351-001-S115**	**174**
BIS00NK	**BIS M-305-001-S115**	**176**
BIS00NY	**BIS M-352-001-S115**	**178**
BIS00P2	**BIS M-307-001-S115**	**180**
BIS00WM	**BIS M-371-000-A01**	**182**
BIS00WL	**BIS M-372-000-A01**	**184**
BIS00WK	**BIS M-373-000-A01**	**186**
BIS00WN	**BIS M-370-000-A02**	**188**
BIS014N	**BIS VM-920**	**190**
BIS013U	**BIS V-6108-048-C002**	**193**
BIS01AE	**BIS V-6108-048-C007**	**193**
BIS013W *	**BIS V-6108-048-C102**	**193**
BIS01AF *	**BIS V-6108-048-C107**	**193**
BIS00T3	**BIS V-6102-019-C001**	**195**
BIS012E *	**BIS V-6102-019-C101**	**195**
BIS01AA	**BIS V-6107-039-C007**	**195**
BIS01AC *	**BIS V-6107-039-C107**	**195**

BIS0186	**BIS V-6107-039-C005**	**197**
BIS018J	**BIS V-6107-039-C006**	**197**
BIS0187 *	**BIS V-6107-039-C105**	**197**
BIS018K *	**BIS V-6107-039-C106**	**197**
BIS012F	**BIS V-6106-034-C002**	**199**
BIS0122	**BIS V-6106-034-C004**	**199**
BIS014C *	**BIS V-6106-034-C102**	**199**
BIS0146	**BIS V-6106-034-C104**	**199**
BIS00U9	**BIS V-6110-063-C002**	**201**
BIS0147	**BIS V-6110-063-C102**	**201**
BIS010P	**BIS V-6111-073-C003**	**201**
BIS014E *	**BIS V-6111-073-C103**	**201**
BIS00N1	**BIS M-6000-007-050-00-ST15**	**203**
BIS00J0	**BIS M-6000-007-050-00-ST24**	**203**
BIS00L7	**BIS M-6008-048-050-06-ST23**	**203**
BIS00EW	**BIS M-6002-019-050-03-ST11**	**203**
BIS00F0	**BIS M-6022-019-050-03-ST14**	**205**
BIS00F2	**BIS M-6026-034-050-06-ST19**	**205**
BIS00LY	**BIS M-699-052-050-03-ST11**	**205**
BIS00EP	**BIS M-407-039-003-06-S115**	**205**
BIS00ZJ	**BIS M-620-068-A01-00-S115**	**207**
BIS00ZH	**BIS M-620-068-A01-00-ST29**	**207**
BIS011P	**BIS M-628-075-A01-03-ST34**	**207**
BIS00ZF	**BIS M-622-070-A01-03-ST33**	**207**
BIS00ZC	**BIS M-626-069-A01-06-ST31**	**209**
BIS00ZA	**BIS M-626-069-A01-06-ST32**	**209**
BIS00ZE	**BIS M-623-071-A01-03-ST30**	**209**
BIS00EK	**BIS M-400-007-002-00-S115**	**224**
BIS00EJ	**BIS M-400-007-001-00-S115**	**226**
BIS00EM	**BIS M-401-007-001-00-S115**	**228**
BIS00ER	**BIS M-451-007-001-00-S115**	**230**
BIS00RU	**BIS M-402-007-004-00-S115**	**232**
BIS00EN	**BIS M-402-007-002-00-S115**	**234**
BIS018E	**BIS M-404-045-401-07-S4-SA1**	**236**
BIS015R	**BIS M-404-045-401-07-S4**	**238**
BIS00LH	**BIS M-400-045-001-07-S4**	**240**
BIS015T	**BIS M-400-045-401-07-S4**	**242**
BIS0108	**BIS M-400-072-001-07-S4**	**244**
BIS00LJ	**BIS M-400-045-002-07-S4**	**246**
BIS0104	**BIS M-400-072-002-07-S4**	**248**
BIS0155	**BIS M-405-045-008-07-S4**	**250**
BIS014J	**BIS M-408-045-001-07-S4**	**252**
BIS014K	**BIS M-458-045-001-07-S4**	**254**
BIS00LK	**BIS M-401-045-001-07-S4**	**256**
BIS0102	**BIS M-401-072-001-07-S4**	**258**
BIS00LM	**BIS M-451-045-001-07-S4**	**260**
BIS0103	**BIS M-451-072-001-07-S4**	**262**
BIS00M1	**BIS M-402-045-004-07-S4**	**264**
BIS0126	**BIS M-402-045-007-07-S4**	**266**
BIS0106	**BIS M-402-072-004-07-S4**	**268**
BIS00LW	**BIS M-402-045-002-07-S4**	**270**
BIS0105	**BIS M-402-072-002-07-S4**	**272**
BIS01E5	**BIS M-4A3-082-401-07-S4**	**274**
BIS01E6	**BIS M-4A6-082-401-07-S4**	**27&**
BIS01E7	**BIS M-4A7-082-401-07-S4**	**278**
BIS01E2	**BIS M-4A9-082-401-07-PU1-0,3**	**280**
BIS0179	**BIS M-4008-048-001-ST4**	**282**
BIS017A	**BIS M-4008-048-002-ST4**	**284**
BIS018A	**BIS M-4006-034-001-ST4**	**286**
BIS018C	**BIS M-4006-034-002-ST4**	**288**
BIS00W4	**BIS M-410-068-001-09-S72**	**290**
BIS00W8	**BIS M-411-068-001-09-S72**	**298**
BIS00W5	**BIS M-411-067-001-04-S92**	**300**
BIS00W7	**BIS M-411-068-001-02-S115**	**302**
BIS00W6	**BIS M-411-068-001-00-S115**	**304**
BAE00JJ	**BIS Z-GW-001-IND**	**306**
BIS000T	**BIS C-121-04/L**	**313**
BIS0011	**BIS C-122-04/L**	**313**
BIS015W	**BIS C-122-05/L**	**313**
BIS0015	**BIS C-122-11/L**	**313**
BIS0004	**BIS C-103-05/A**	**315**
BIS0009	**BIS C-105-05/A**	**315**
BIS001E	**BIS C-130-05/L**	**315**
BIS0002	**BIS C-100-05/A**	**315**
BIS0019	**BIS C-128-05/L**	**317**
BIS001C	**BIS C-128-11/L**	**317**
BIS0006	**BIS C-104-11/A**	**317**
BIS0007	**BIS C-104-32/A**	**317**
BIS000M	**BIS C-117-05/A**	**319**
BIS000N	**BIS C-117-05/L**	**319**
BIS00J4	**BIS C-140-05/L-M6**	**319**
BIS00J2	**BIS C-140-05/L-M8**	**319**
BIS00L9	**BIS C-140-11/L-M10**	**321**
BIS00J1	**BIS C-140-11/L-M8**	**321**
BIS000C	**BIS C-108-05/L**	**321**
BIS000H	**BIS C-108-11/L**	**321**
BIS000K	**BIS C-108-32/L**	**323**
BIS0017	**BIS C-127-05/L**	**323**
BIS0028	**BIS C-150-05/A**	**325**
BIS002A	**BIS C-150-11/A**	**325**
BIS002E	**BIS C-150-32/A**	**325**
BIS0021	**BIS C-134-11/L**	**325**
BIS002K	**BIS C-190-05/L**	**327**
BIS002N	**BIS C-190-32/L**	**327**
BIS002P	**BIS C-191-05/L**	**327**
BIS002Y	**BIS C-122-04/L-ZC1**	**329**
BIS001H	**BIS C-130-05/L-SA1**	**329**
BIS001Y	**BIS C-131-05/L**	**329**
BIS00P5	**BIS C-300-PU1-01**	**334**
BIS0138	**BIS C-300-PU1-02**	**334**
BIS005Z	**BIS C-300-PU1-05**	**334**
BIS00P6	**BIS C-300-PU1-10**	**334**
BIS00PA	**BIS C-302-PU1-05**	**336**
BIS00P9	**BIS C-302-PU1-10**	**336**
BIS00PC	**BIS C-306-PU1-01**	**338**
BIS00PE	**BIS C-306-PU1-10**	**338**
BIS0077	**BIS C-319-PU1-01**	**340**
BIS0078	**BIS C-319-PU1-05**	**340**
BIS0079	**BIS C-319-PU1-10**	**340**
BIS007A	**BIS C-319/05-S4**	**342**
BIS007C	**BIS C-319/10-S4**	**342**
BIS007P	**BIS C-325/01-S4**	**344**

BIS007R	**BIS C-325/05-S4**	**344**
BIS007T	**BIS C-325/10-S4**	**344**
BIS00PF	**BIS C-310-PU1-01**	**346**
BIS00PH	**BIS C-310-PU1-05**	**346**
BIS00PJ	**BIS C-310-PU1-10**	**346**
BIS007J	**BIS C-323/01-S4**	**348**
BIS007K	**BIS C-323/05-S4**	**348**
BIS007L	**BIS C-323/10-S4**	**348**
BIS0066	**BIS C-305-PU1-01**	**350**
BIS0067	**BIS C-305-PU1-05**	**350**
BIS0068	**BIS C-305-PU1-10**	**350**
BIS007H	**BIS C-322-PU1-05**	**352**
BIS00PK	**BIS C-315-PU1-01**	**354**
BIS00PL	**BIS C-315-PU1-05**	**354**
BIS00PM	**BIS C-315-PU1-10**	**354**
BIS006Y	**BIS C-315/05-S4**	**356**
BIS006Z	**BIS C-315/10-S4**	**356**
BIS00PN	**BIS C-351-PU1-05**	**358**
BIS00PP	**BIS C-351-PU1-10**	**358**
BAM012C	**BIS C-300-ZA1**	**360**
BIS00JA	**BIS C-380-01/10-00,7**	**362**
BIS00JJ	**BIS C-380-06/06-01**	**362**
BIS00JP	**BIS C-380-10/10-01**	**362**
BIS00JK	**BIS C-380-06/06-01,5**	**362**
BIS00N9	**BIS C-380-06/06-05**	**362**
BIS00JR	**BIS C-380-10/10-05**	**362**
BIS013W;	**BIS V-6108-048-C102**	**367**
BIS012E	**BIS V-6102-019-C101**	**367**
BIS0187	**BIS V-6107-039-C105**	**367**
BIS018K	**BIS V-6107-039-C106**	**367**
BIS014C	**BIS V-6106-034-C102**	**369**
BIS0146	**BIS V-6106-034-C104**	**369**
BIS0147	**BIS V-6110-063-C102**	**369**
BIS014E	**BIS V-6111-073-C103**	**369**
BIS008U	**BIS C-600-007-650-00-KL1**	**371**
BIS00K3	**BIS C-6008-048-650-06-ST23**	**371**
BIS00K4	**BIS C-6028-048-050-06-ST22**	**371**
BIS00TU	**BIS C-6028-048-050-06-ST28**	**371**
BIS009F	**BIS C-6002-019-654-03-ST11**	**373**
BIS009L	**BIS C-6002-028-650-03-KL2**	**373**
BIS0099	**BIS C-6002-019-650-03-KL2**	**373**
BIS009A	**BIS C-6002-019-650-03-ST11**	**373**
BIS009J	**BIS C-6002-019-655-03-ST11**	**375**
BIS009M	**BIS C-6002-028-650-03-ST11**	**375**
BIS00A4	**BIS C-602-019-650-03-KL2**	**375**
BIS00AL	**BIS C-6022-019-050-03-ST10**	**375**
BIS00AM	**BIS C-6022-019-050-03-ST14**	**377**
BIS00AY	**BIS C-6027-039-050-06-ST19**	**377**
BIS00AU	**BIS C-6026-034-050-06-ST19**	**377**
BIS00H6	**BIS C-60R-001-08P-PU-05**	**388**
BIS00H7	**BIS C-60R-001-08P-PU-10**	**388**
BIS00H8	**BIS C-60R-001-08P-PU-20**	**388**
BAE004C	**BIS C-720-01-03**	**391**
BAE0088	**BIS C-810-0-003**	**391**
BAE0094	**BIS C-850**	**391**
BAE0095	**BIS C-851**	**391**
BAE0096	**BIS C-852**	**391**
BAE0097	**BIS C-853**	**391**
BIS0038	**BIS L-101-05/L-RO**	**399**
BIS003C	**BIS L-102-05/L-RO**	**399**
BIS003F	**BIS L-103-05/L-RO**	**399**
BIS003R	**BIS L-200-03/L**	**401**
BIS003T	**BIS L-201-03/L**	**401**
BIS003U	**BIS L-202-03/L**	**401**
BIS003W	**BIS L-203-03/L**	**401**
BIS0033	**BIS L-100-01/L**	**403**
BIS0034	**BIS L-100-05/L**	**403**
BIS0036	**BIS L-101-01/L**	**403**
BIS0037	**BIS L-101-05/L**	**403**
BIS0039	**BIS L-102-01/L**	**405**
BIS003A	**BIS L-102-05/L**	**405**
BIS003E	**BIS L-103-05/L**	**405**
BIS00KR	**BIS L-140-05/L-M8**	**405**
BIS003N	**BIS L-150-05/A**	**406**
BIS00UL	**BIS VL-300-001-S4**	**408**
BIS00U6	**BIS VL-301-001-S4**	**410**
BIS015U	**BIS VL-308-001-S4**	**412**
BIS00UJ	**BIS VL-306-001-S4**	**414**
BIS00UF	**BIS VL-302-001-S4**	**416**
BIS00UK	**BIS VL-350-001-S4**	**418**
BIS00UH;BIS003N	**BIS VL-304-001-S4**	**420**
BIS003U	**BIS V-6108-048-C002**	**423**
BIS01AE	**BIS V-6108-048-C007**	**423**
BIS013W *	**BIS V-6108-048-C102**	**423**
BIS01AF *	**BIS V-6108-048-C107**	**423**
BIS00T3	**BIS V-6102-019-C001**	**425**
BIS012E *	**BIS V-6102-019-C101**	**425**
BIS01AA	**BIS V-6107-039-C007**	**425**
BIS01AC *	**BIS V-6107-039-C107**	**425**
BIS0186	**BIS V-6107-039-C005**	**427**
BIS018J	**BIS V-6107-039-C006**	**427**
BIS0187 *	**BIS V-6107-039-C105**	**427**
BIS018K *	**BIS V-6107-039-C106**	**427**
BIS012F	**BIS V-6106-034-C002**	**429**
BIS0122	**BIS V-6106-034-C004**	**429**
BIS014C *	**BIS V-6106-034-C102**	**429**
BIS0146	**BIS V-6106-034-C104**	**429**
BIS00U9	**BIS V-6110-063-C002**	**431**
BIS0147	**BIS V-6110-063-C102**	**431**
BIS010P	**BIS V-6111-073-C003**	**431**
BIS014E *	**BIS V-6111-073-C103**	**431**
BAE003U	**BIS Z-EL-001-ETHERNET**	**433**
BIS00C5	**BIS L-400-035-001-00-S115**	**440**
BIS00C7	**BIS L-400-035-002-00-S115**	**442**
BIS00C9	**BIS L-400-035-003-00-S115**	**444**
BIS00CC	**BIS L-400-035-004-00-S115**	**446**
BIS00C6	**BIS L-400-035-001-02-S115**	**448**
BIS00CZ	**BIS L-409-045-001-07-S4**	**450**
BIS00E0;	**BIS L-409-045-002-07-S4**	**452**
BIS00E1	**BIS L-409-045-003-07-S4**	**454**
BIS00E2	**BIS L-409-045-004-07-S4**	**456**
BIS00CM	**BIS L-405-033-001-05-MU**	**458**

BIS00CT	**BIS L-405-037-001-05-MU**	**460**
BCC00R2	**BIS L-503-PU1-05**	**462**
BCC00R3	**BIS L-503-PU1-10**	**463**
BCC00R4	**BIS L-503-PU1-15**	**464**
BIS00CN	**BIS L-405-033-002-05-MU**	**466**
BIS00CP	**BIS L-405-033-003-05-MU**	**468**
BIS00CR	**BIS L-405-033-004-05-MU**	**470**
BIS00CU	**BIS L-405-037-002-05-MU**	**472**
BIS00CW	**BIS L-405-037-003-05-MU**	**474**
BIS00CH	**BIS L-400-043-001-02-S115**	**476**
BIS00CJ	**BIS L-400-043-002-02-S115**	**478**
BIS00CK	**BIS L-400-043-003-02-S115**	**480**
BIS00CL	**BIS L-400-043-004-02-S115**	**482**
BIS003T	**BVS SL-M1280Z00-07-000**	**513**
BVS003C	**BVS CA-GX0-0016ZC-111C41-XAS2**	**510**
BVS003A	**BVS CA-GX0-0016ZG-112C41-XAS2**	**510**
BVS0035	**BVS CA-GX0-0124AC-111C41-XAS2**	**510**
BVS0034	**BVS CA-GX0-0124AG-112C41-XAS2**	**511**
BVS0039	**BVS CA-GX0-0032AC-111C41-XAS2**	**511**
BVS0038	**BVS CA-GX0-0032AG-112C41-XAS2**	**511**
BVS0037	**BVS CA-GX0-0051AC-111C41-XAS2**	**511**
BVS0036	**BVS CA-GX0-0051AG-112C41-XAS2**	**511**
BVS003N	**BVS CA-SF2-0016ZC-111121-XAS2**	**512**
BVS003M	**BVS CA-SF2-0016ZG-112121-XAS2**	**512**
BVS003F	**BVS CA-SF2-0124AC-111121-XAS2**	**512**
BVS003E	**BVS CA-SF2-0124AG-112121-XAS2**	**513**
BVS003L	**BVS CA-SF2-0032AC-111121-XAS2**	**513**
BVS003K	**BVS CA-SF2-0032AG-112121-XAS2**	**513**
BVS003J	**BVS CA-SF2-0051AC-111121-XAS2**	**513**
BVS003H	**BVS CA-SF2-0051AG-112121-XAS2**	**513**
BVS001F	**BVS UR-3-105-E**	**520**
BVS001H	**BVS UR-3-101-E**	**520**
BVS001J	**BVS UR-3-103-E**	**520**
BVS001K	**BVS UR-3-107-E**	**520**
BVS001L	**BVS UR-3-005-E**	**520**
BVS001M	**BVS UR-3-001-E**	**520**
BVS001N	**BVS UR-3-003-E**	**520**
BVS001P	**BVS UR-3-007-E**	**520**
BVS0016	**BVS OI-3-155-E**	**524**
BVS0015	**BVS OI-3-151-E**	**524**
BVS0017	**BVS OI-3-153-E**	**524**
BVS0018	**BVS OI-3-157-E**	**524**
BVS000L	**BVS OI-3-055-E**	**524**
BVS000J	**BVS OI-3-051-E**	**524**
BVS000K	**BVS OI-3-053-E**	**524**
BVS000W	**BVS OI-3-057-E**	**524**
BVS0013	**BVS OI-3-105-E**	**528**
BVS0014	**BVS OI-3-101-E**	**528**
BVS0012	**BVS OI-3-103-E**	**528**
BVS000E	**BVS OI-3-005-E**	**532**
BVS0003	**BVS OI-3-001-E**	**532**
BVS0005	**BVS OI-3-003-E**	**532**
BVS001Z	**BVS HS-PB-DPW-MZ-01**	**538**
BVS001Y	**BVS HS-PB-HDW-MZ-01**	**535**
BVS001T	**BVS HS-PC-DPW-MA-01**	**535**
BVS001U	**BVS HS-PC-HDW-MA-01**	**535**
BVS001C	**BVS ID-3-105-E**	**538**
BVS0019	**BVS ID-3-101-E**	**538**
BVS001A	**BVS ID-3-103-E**	**538**
BVS001R	**BVS ID-3-005-E**	**539**
BVS0001	**BVS ID-3-001-E**	**539**
BVS000T	**BVS ID-3-003-E**	**539**
BVS000Y	**BVS ID-3-007-E**	**539**
BNI007T	**BNI IOL-800-000-Z036**	**552**
BNI0087	**BNI IOL-800-000-Z037**	**552**
BNI007F	**BNI IOL-801-000-Z036**	**552**
BNI0088	**BNI IOL-801-102-Z036**	**553**
BNI0086	**BNI IOL-801-000-Z037**	**553**
BNI008A	**BNI IOL-801-102-Z037**	**553**
BNI0072	**BNI IOL-802-000-Z036**	**553**
BNI0082	**BNI IOL-802-102-Z036**	**553**
BNI0083	**BNI IOL-802-000-Z037**	**554**
BNI0085	**BNI IOL-802-102-Z037**	**554**
BAE006K	**BDD-UM 3023**	**560**
BAE0067	**BDD-AM 10-1-P**	**560**
BAE0069	**BDD-AM 10-1-SSD**	**560**
BAE004H	**BDD 610-R3Q3-0-51-N-00**	**561**
BAE004J	**BDD 610-R3Q3-0-53-N-00**	**561**
BAE004K	**BDD 611-R3Q4-0-52-N-00**	**561**
BAE00EH	**BAE PD-VS-002-E**	**561**
BAE00WC	**BAE PD-VS-011-01**	**570**

Global Project Management

WE ARE EVERYWHERE FOR YOU

Always where you need us
Wherever you are doing business, we will support you locally. We work closely with machine and systems builders, systems integrators, planning offices and maintenance engineers. Balluff has constructed a global network for you consisting of technical consulting, sales and after-sales services.

Project manuals and approval lists
We provide you with custom tailored product data for smooth running of your projects. You receive project-specific manuals and approval lists. And personal contacts from Balluff are at your side throughout the entire project.

Individual services
If our services need to be even more personalized, we make this possible as well: with individual e-catalogs, application-specific product modifications, integrated software and system solutions and comprehensive logistics concepts.

Questions? Contact us. We are happy to help.

www.balluff.com

innovating automation

Balluff

WE OPEN UP NEW PERSPECTIVES

Balluff is a leading provider of high-value sensor, identification and image processing solutions including networking technology and software for any automation requirement. Family owned for more than 100 years, Balluff currently employs around 3600 persons in 38 subsidiaries with sales, production and development facilities around the world to ensure your success. Together with our representatives we guarantee the highest quality standards in 68 countries so that you always get the best.

We perform top services for innovative solutions that increase your competitive ability. We deliver a consistent digital focus, manufacturing expertise, and high personal dedication.

We adhere to our motto "Innovating Automation" as pacesetters of automation, refiners and new developers, and technological trailblazers. In open exchange with associations, universities and research institutes as well as in close contact with our customers, we create new industrial sector solutions for automation. As a future-looking company we keep our eye not only on the traditional areas of automation, but also devote ourselves to the development of holistic applications for an increasingly digital and networked world.

We have the future firmly in view in everything we do. With a sophisticated environmental management system, we protect the environment and handle our resources with care. This also creates for you the best prerequisites for sustained action.

You can always rely on us, our products and our adherence to delivery dates and schedule — All in the name of mutually beneficial partnership.

Headquarters
Balluff GmbH
Schurwaldstrasse 9
73765 Neuhausen a. d. F.
Germany
Phone +49 7158 173-0
Fax +49 7158 5010
balluff@balluff.de

CONTACT OUR WORLDWIDE SUBSIDIARIES

Doc.-No. 942498 EN · E22 · Subject to changes. Replaces E21